RESISTANCE CHART

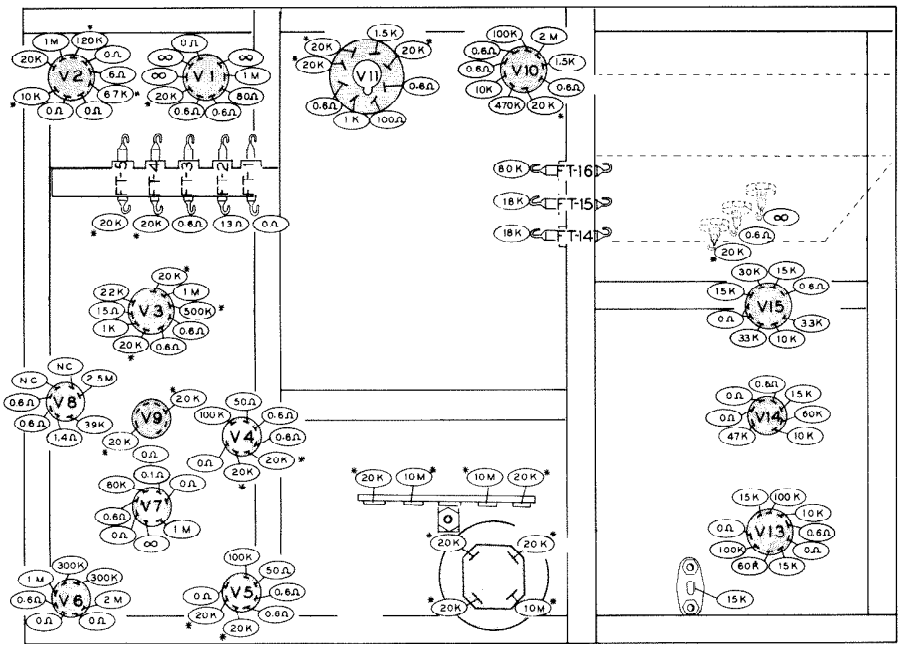

CONTROLS ARE SET AS FOLLOWS:

AVC : OFF
RF GAIN : FULL CW
BFO/PITCH : PUSHED IN AND FULL CCW
ANL/SQUELCH : PUSHED IN AND FULL CCW
FINAL TUNE : FULL CCW
SPOT : OFF
CW-AM : AM
AUDIO : POWER OFF
X2-X3-X4-VFO : X4
RCVR TUNE : DIAL POINTER SET AT 50 MC
TRANS. TUNE : DIAL POINTER SET AT 50 MC
COUPLING : FULL CCW

LOADING : CAPACITOR PLATES FULL MESHED
MOD. LEVEL : PUSHED IN AND FULL CCW
MOD. MONITOR : OFF
POWER CORD DISCONNECTED

**IF READING IS ABNORMALLY LOW - REVERSE METER PROBES.

M = Meg
K = 1,000
* MINIMUM READING AFTER 5 SECONDS, WITH ALL TUBES IN SOCKETS.

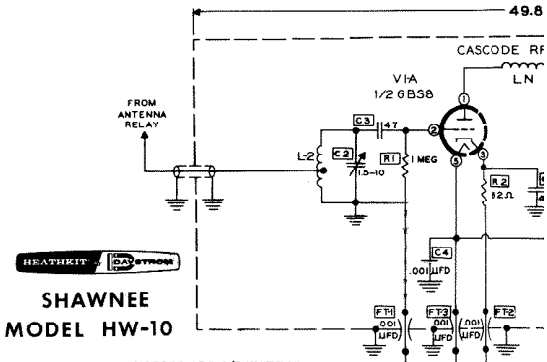

HEATHKIT / DASTRON

SHAWNEE MODEL HW-10

ALL RESISTORS ARE 1/2 WATT UNLESS OTHERWISE SPECIFIED.
ALL CAPACITOR VALUES ARE IN µµf UNLESS SHOWN OTHERWISE.
CAPACITORS DESIGNATED WITH FT ARE FEED-THROUGH TYPE.
RELAYS RL1 AND RL2 ARE SHOWN IN RECEIVE CONDITION.
XTAL-VFO SWITCH SHOWN IN VFO POSITION.
POWER SWITCH SHOWN IN ON POSITION.
CW-AM SWITCH SHOWN IN AM POSITION.
P.A. SWITCH SHOWN IN OFF POSITION.
MODULATION MONITOR SWITCH SHOWN IN OFF POSITION.
SPOT SWITCH SHOWN IN OFF POSITION.
AVC SWITCH SHOWN IN ON POSITION.

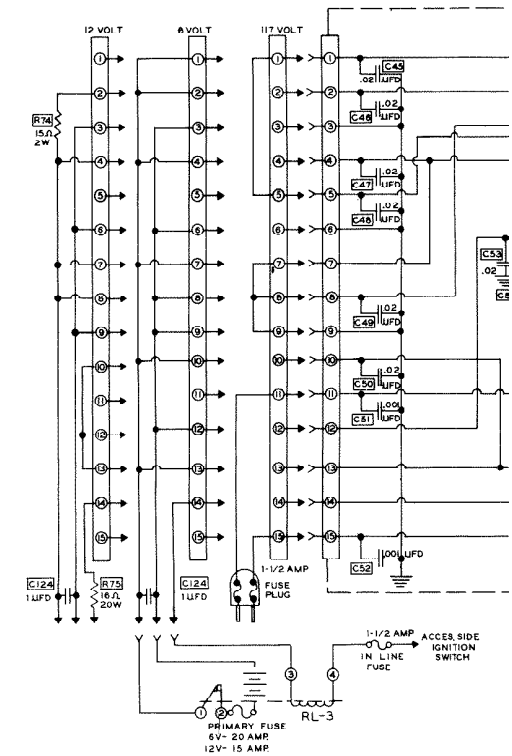

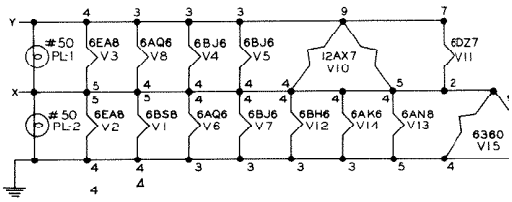

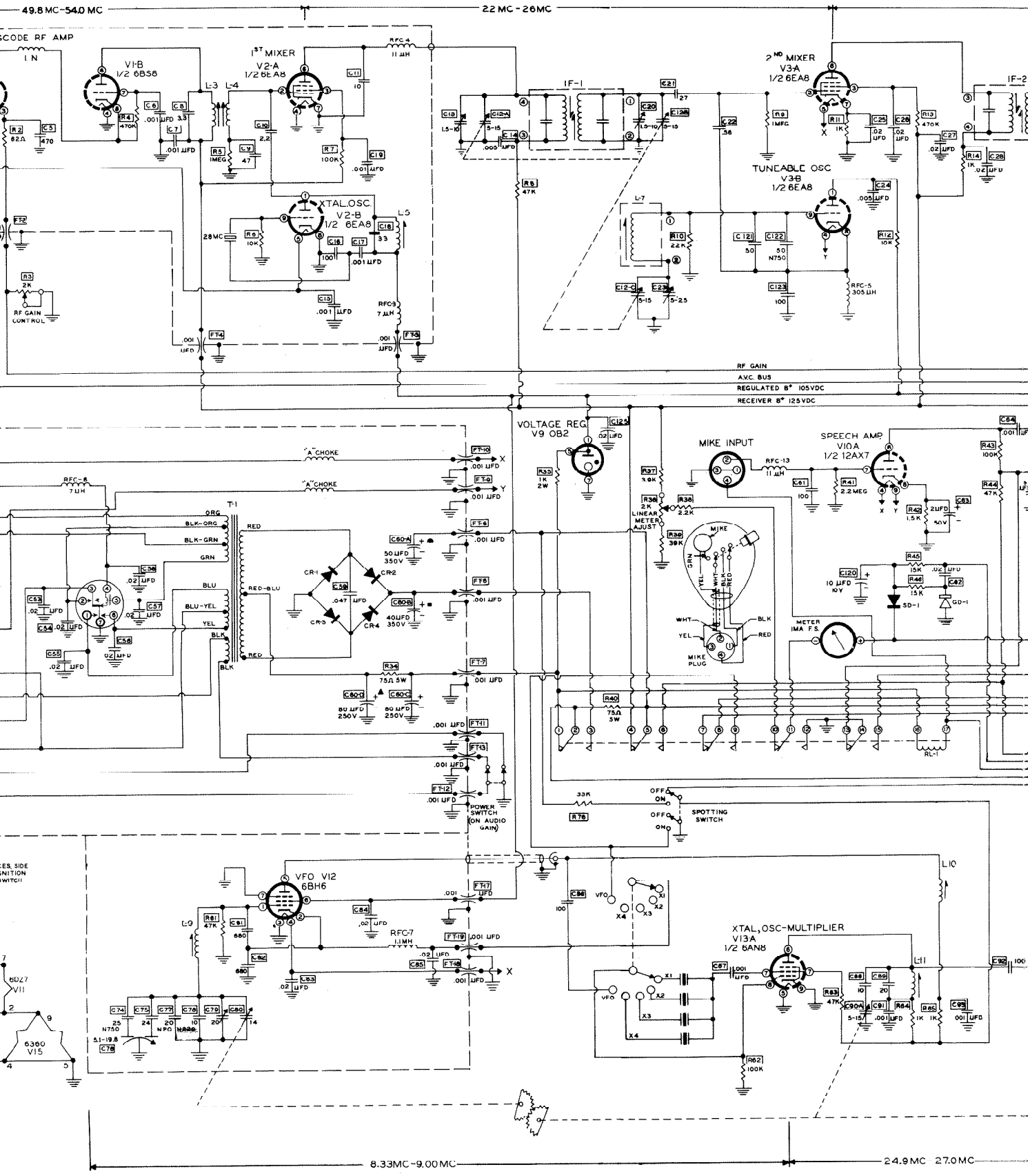
49.8 MC-54.0 MC
2.2 MC - 26MC
SCODE RF AMP
V1-B
1/2 6BS8
1ST MIXER
V2-A
1/2 6EA8
XTAL.OSC.
V2-B
1/2 6EA8
2ND MIXER
V3-A
1/2 6EA8
TUNEABLE OSC
V3-B
1/2 6EA8
IF-1
IF-2
RF GAIN CONTROL
RF GAIN
A.V.C. BUS
REGULATED B+ 105VDC
RECEIVER B+ 125VDC
VOLTAGE REG.
V9 OB2
MIKE INPUT
SPEECH AMP.
V10A
1/2 12AX7
LINEAR METER ADJUST
MIKE PLUG
METER 1MA F.S.
POWER SWITCH (ON AUDIO GAIN)
SPOTTING SWITCH
VFO V12
6BH6
XTAL.OSC-MULTIPLIER
V13A
1/2 6AN8
8.33MC-9.00MC
24.9MC 27.0MC

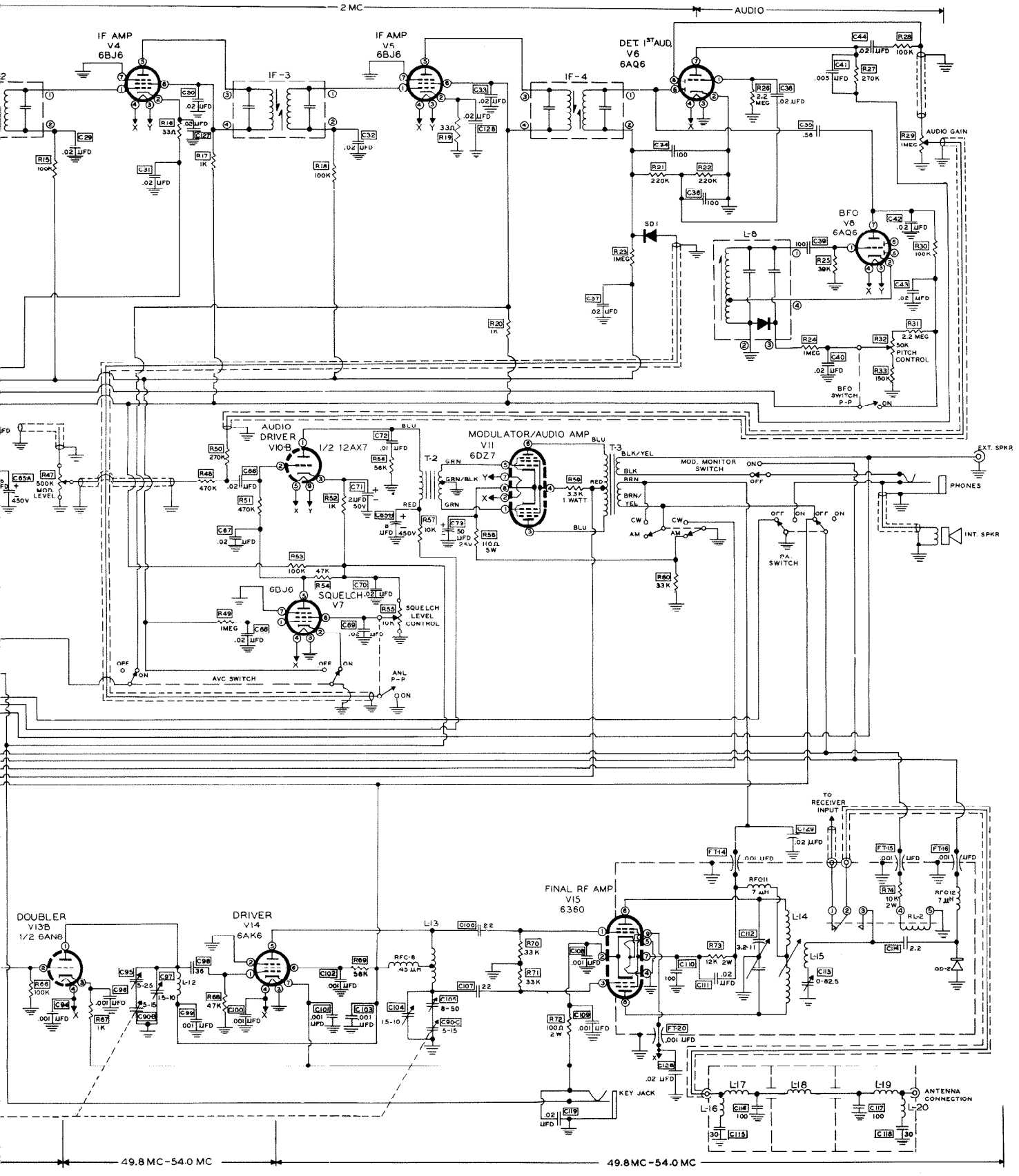
2 MC
AUDIO
IF AMP V4 6BJ6
IF AMP V5 6BJ6
IF-3
IF-4
DET 1ST AUD. V6 6AQ6
AUDIO GAIN
BFO V8 6AQ6
SD1
L-8
PITCH CONTROL
BFO SWITCH P-P
AUDIO DRIVER V10-B 1/2 12AX7
MODULATOR/AUDIO AMP V11 6DZ7
MOD. MONITOR SWITCH
EXT. SPKR
PHONES
INT. SPKR
PA. SWITCH
MOD. LEVEL
SQUELCH V7 6DJ6
SQUELCH LEVEL CONTROL
AVC SWITCH
ANL P-P
TO RECEIVER INPUT
FINAL RF AMP V15 6360
DOUBLER V13B 1/2 6AN8
DRIVER V14 6AK6
KEY JACK
ANTENNA CONNECTION
49.8 MC-54.0 MC
49.8 MC-54.0 MC