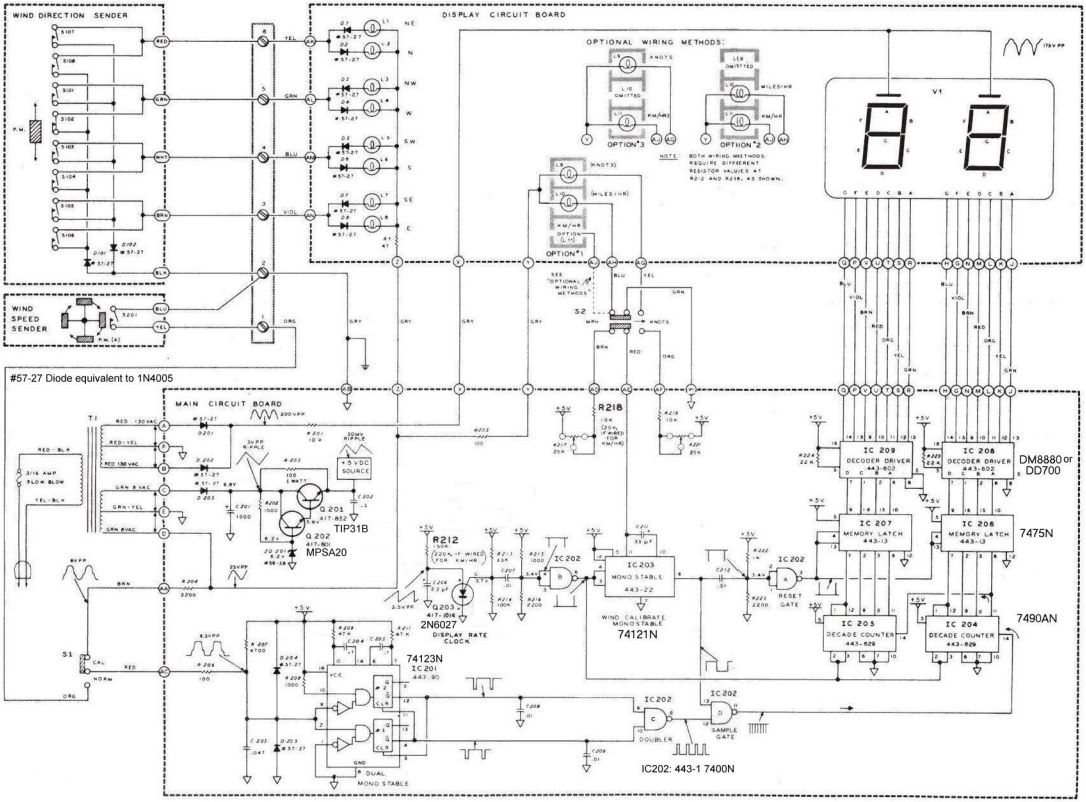

CORRECTIONS (Feb 2006):

1. Q203 was drawn as a SCR, and not as a PUT.
2. Optional Wiring Note (bellow Option #2) mistakenly refers to "R212 and R2118".It should read "R212 and R218".
3. Pin of IC201 that goes to R209/C204 is marked as 13. It should be marked as pin 15.
4. Generic Part Number added for IC's and TR's.
5. IC202 gate denomination "D" changed to "C".
6. IC202 gate denomination "E" changed to "D".
7. Component ID's not used: R210, R211, C210.
8. IC207 pin labeled as "1" should be labeled as "7" (IC206 is correct).

SCHEMATIC OF THE HEATHKIT®
DIGITAL WIND SPEED/DIRECTION INDICATOR
MODEL ID-1590/ID-1590E

NOTES:

1. ALL RESISTORS ARE 1/2 WATT, UNLESS MARKED OTHERWISE. VALUES ARE SHOWN IN OHMS. (K=1000).
2. CAPACITOR VALUES ARE SHOWN IN MICROFARADS.
3. SYMBOLS:
   - ○ = LETTERED CIRCUIT BOARD HOLE.
   - ▽ = CIRCUIT BOARD GROUND.
4. COMPONENTS ARE NUMBERED ON THE SCHEMATIC IN THE FOLLOWING GROUPS:
   - 1- 10 PARTS ON THE DISPLAY CIRCUIT BOARD.
   - 101-110 PARTS ON THE WIND DIRECTION SENDER CIRCUIT BOARD.
   - 201-225 PARTS ON THE MAIN CIRCUIT BOARD.