Appendix A

The following pages contain informations about the CD changer MBCIII–PRO.

Technical Description

MBC III–PRO

CD–Changer
for
NSM Phonographs

1. General description

The MBCIII is a CD changer for 100 audio CDs altogether. The device is equipped with a professional CD player and is constructed especially for the NSM phonograph.

It contains 2 compact CD magazines with trays for each 50 CDs with 12 cm diameter in which the CDs are kept dustfree. The magazines are easy to remove; the CDs can be exchanged comfortably and without any problem. Via the trays they are being transported carefully to the CD player, where they are being played contactlessly.

The MBCIII contains an autonomic controller which controls and surveys all functions. Via a serial interface it communicates with the control unit of the phonograph, exchanging commands and status requests.

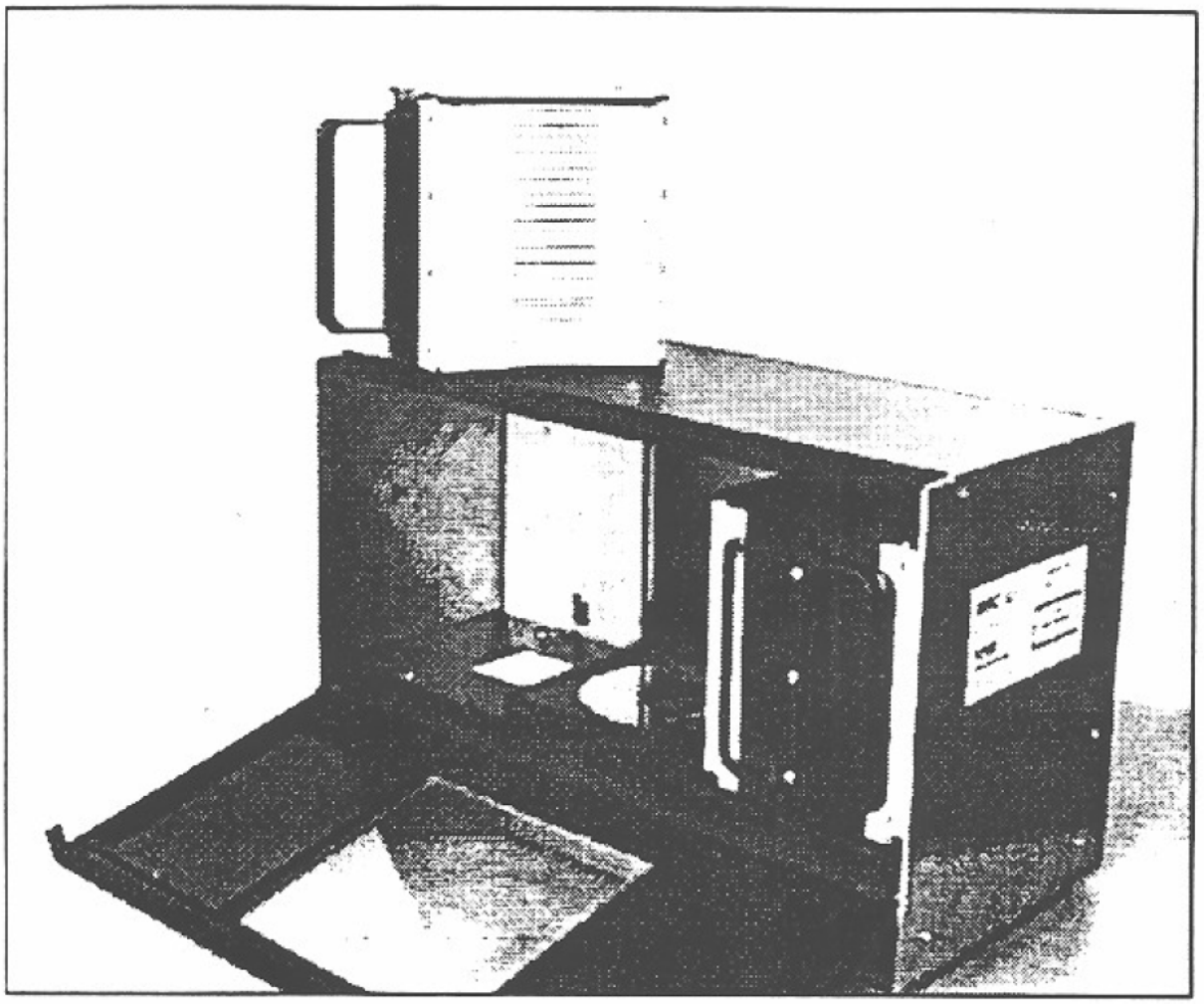

Figure 1 General view to the CD changer MBC III

2. Functional description

The following description refers to the frontal view to the CD changer, that means view to the magazines.

2.1 Function of the changer mechanism

The function of the changer is based on the following motors and sensors.

Motors:

- MoLift= Stepper motor for lift movement
- MoGr= Stepper motor for grip movement
- MaGr= Selector motor for right side or left side access of the grip

Sensors

- sLift= Optocoupler for lift synchronization
- Encoder= Optical encoder for controlling the motor "MoLift"
- sGrI= Optocoupler for grip synchronization "Inner"
- sGrO= Optocoupler for grip synchronization "Outer"
- sGrL= Optocoupler for controlling the motor "MaGr" left
- sGrR= Optocoupler for controlling the motor "MaGr" right

2.1.1 Lift

The lift is driven by two lift shafts and moved up and down by the motor "MoLift" via two synchronous running belts
Inside the lift there are no electrical drivers or sensors. All necessary electrical components are placed beneath the bottom plate (lower supporting plate)
Both lift shafts are arranged turnably and are grooved for transmitting the motor turnings to the grips and the grip access
An eventual hindrance to or a malfunction of the lift are surveyed by the optical "Encoder".
This encoder is built up with an optocoupler and a diaphragm with 100 slits and is directly mounted on the shaft of the motor "MoLift". So every stepping error can be detected.

When the lift is moved down to the home position at the bottom of the appliance another diaphragm will darken the optocoupler "sLift" (CB OPTO). So this optocoupler can serve for synchronising the lift motor

The upper part (cover) of the lift contains a stretching cone with an integrated tonc magnet in order to press the CD on the turntable of the player. When a CD is being played no mechanical pressure is effected on the player

2.1.2 Grip

Inside the lift there are 2 gripper. They are moved in opposite direction by the "right lift leading shaft" driven by the stepper motor "MoGr". The gripper can take the positions "Inner" (tray in lift) or "Outer" (tray not in lift). Depending on the position of the switch inside the lift and during rotation of motor "MoGr" one grip (left or right) at a time engages in the groove of the tray after leaving the switch; the attached tray is transported into resp. out of the lift
The two optocouplers "sGrI" (grip position Inner) and "sGrO" (grip position Outer) are used to synchronize the grip motor. The corresponding diaphragm (a lever) is coupled with the shift linkage. In position "Inner" the optocoupler "sGrI" and in position "Outer" the optocoupler "sGrO" will be darkened.

All optocouplers are positioned on the CB OPTO

2.1.3 Grip access

The grip access selection to a tray (left hand or right hand) is defined by the position of motor "MaGr". This motor works like a "twin magnet" which moves a switch inside the lift in a motor angle of 18° via the left lift shaft. Depending on the position of this switch (left or right) the grip access to the tray is controlled. Two optocouplers "sGrL" or "sGrR" are used to monitor the correct functioning of the change mechanism. Depending on the position of the switch one of these two optocouplers is darkened by a lever (CB OPTO).

2.1.4 Synchronization of the changer mechanism

The two stepper motors "MoLift" for lift movement and "MoGr" for grip movement are synchronized via optocouplers (sLift, sGrl, sGrO). The points of synchronization are automatically requested by the MBC–controller while power on. The distance (measured in motor steps) between the mechanical reference point and the respective synchronization point is "learned" automatically while the controller is in "learn mode". Therefore the mechanism must be positioned manually to the mechanical reference point. Afterwards one "learn run" must be performed by executing the corresponding service program step via display/keyboard. The detected values are stored in the non–volatile memory chip IC4 of the MBC–controller.

The setting of the synchronization points is already completed in the factory and does not have to be repeated. A new setting of the synchronization points becomes necessary after:

- An unacceptably tight mechanical hit
- Exchange of lift or grip mechanism
- Exchange of parts of the driver mechanism
- Exchange of the "CB OPTO"
- Exchange of the "CB CONTROLLER"
- Exchange of the memory chip IC4 (on CB CONTROLLER)

Refer to "Setting the grip– and lift reference

2.2 Driving and functionning of the CD player

The CD player is a professional "PHILIPS CD–Pro" CD drive
This drive is mounted vibration–free on the lower side of the changer s mounting plate
The whole electronics (servo decoder D/A changer) of the CD player are placed directly below the CD drive
Via a serial interface the MBC controller communicates with the controller of the CD player.
Thereby all necessary commands and status information of the player are transmitted.
A steel plate stretching the CD is pressed into the turntable It serves as antipole for the tonc magnet within the stretching cone placed in the upper part of the lift
The CD is being pressed magnetically that means contactlessly onto the turntable of the player

2.3 Technical data

Power supply:

Mains voltage:	+28V DC ±15% / 1.5A
	+14V DC ±15% / 1A
	+5V DC ±10% / 0.6A

Operating conditions:

Ambient temperature:	5° to 45° C, operating
	–25° to 55° C, storage
Relative humidity:	5% to 90%, operating
(non–condensing)	5% to 95%, storage

Dimensions and Weight:

Height	275 mm
Width	465 mm
Depth	220 mm
Weight (without CDs):	11.3 kg

Magazines/Trays:

Number of magazines	2
Dimensions	160(H)x150(B)x180(T) mm
Number of trays	50 per magazine
Dimensions	3(H)x151(B)x137(T) mm

Robotic:

Media swap time	1.2 sec
Media swap time	2.5 sec
Media exchange time	2 sec (average)

CD Drive:

Brand	PHILIPS CD–Pro
Applicable disc format	Red–book
Rotational speed	approx. 200 to 530 rpm
MTBF (Mean Time Between Failures)	30,000 power–on hours

Audio specification:

Output level	1.5 Veff
Output impedance	100 Ω
Frequency range	20Hz – 20KHz
Noise voltage ratio	–90 dB
Channel separation	–89 dB
K–factor	–85 dB

3. Settings

3.1. Setting the Gripper Reference (P158)

Before setting the gripper reference please read the chapter "Function of the changer mechanism" first for a better understanding of the subject.

1. At first it has to be checked whether the diaphragm coupled with the shift linkage symmetrically darkens the two optocouplers "sGrI" and "sGrO". Remove the magazines from the CD changer. Place the unit upside down on the table and disassemble the bottom tub.

2. Move the diaphragm wheel manually by turning the flywheel of the grip motor first to one and then to the other stop. Check if the diaphragm symmetrically darkens the optocouplers "sGrI" and "sGrO" in the two final positions (stream of light interrupted).

   The rough setting is done by applying the driver toothed belt.
   The fine adjustment may be changed by loosening the clamping screw at the diaphragm wheel.

   After checking or setting the grip rough adjustment put the CD changer once again into its correct position and re–insert the magazines.

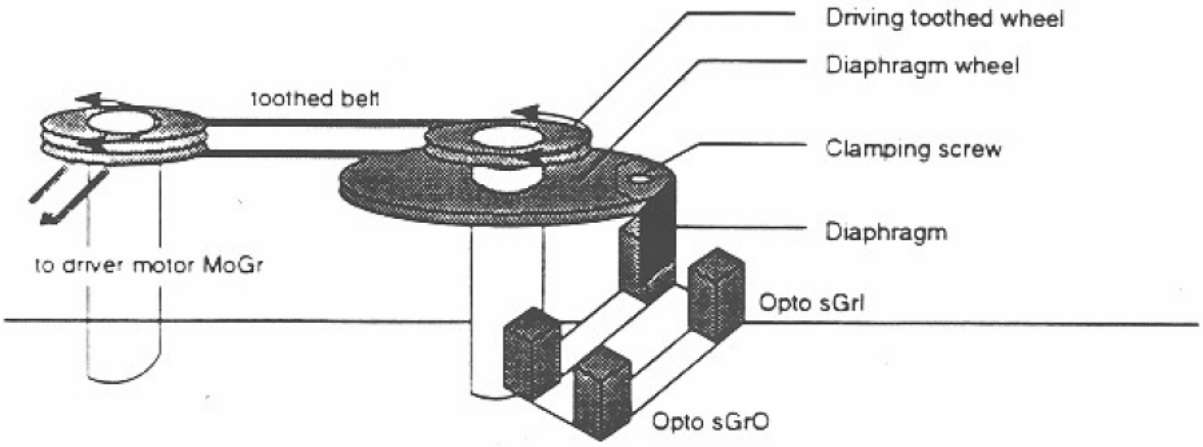

Figure 2 Principle of function

3. Connect the device with the phonograph

   Enter service mode by pulling out the service switch
   Enter **158+H** Display shows **P158** __ ____

4. Enter 0 Display shows **P158** __ **1418** (for example)

   The display shows the actually stored synchronisation values for the grippers (outer distance = 18 motor steps, inner distance = 14 motor steps).

5. Enter **H**

   The grippers are moved automatically to the "outer position".

   Display shows: **P158** __ ___0

6. Enter **H**

   Grippers are moved automatically to the "inner position".

   Display shows: **P158 __ ___1**

7. Enter **H**. The new reference values will be evaluated and the grippers are moved to the outside position.
   The display shows the new synchronisation values, for example: **P158 __ 1517** (outer distance = 17 motor steps, inner distance = 15 motor steps).

8. Enter **H**

   The new values are saved to memory.

<u>Note:</u> For best functionality of the changer the displayed values must be in a range from 12 to 25.
The difference between the two displayed values must be ≤ 5
(maximum display "P158 ..._17" or "P158 .. 2025).

9. Enter **H**. The next service program step is entered.

   Display shows: **P159 __ ____**

The setting of the gripper reference is now terminated.

If the values are outside the allowed tolerances, the error lamp will blink and the old values are unchanged

The program may be interrupted at any stage previous to step 8. by pressing the **C** button on the keypad. The original values will be unchanged.

Alternatively to this step–by–step routine you can use an automatic routine:

1 Call up the service program as usual (P158 +H)

2 Enter **1 + H**
  The automatic routine is started. The evaluated values will be directly saved to memory.

3 Enter **H**. The next service program step is entered
  Display shows: **P159 __ ____**

3.2. Setting the Lift–Reference (P159)

For a better understanding first read the chapter "Function of the changer mechanism".
The setting of the lift refence should be performed after setting the grip reference (no tray in the lift).

The setting of the lift is performed without any mechanical adjustment.

The vertical distance from the lower bottom plate up to the synchronization mark (sLift) is stored automatically by starting the service menu. A control and possible height correction is performed in front of tray 49.

1 Connect the CD–changer with the phonograph. Enter service mode by pulling out the service switch.
Enter **159+H** Display shows: **P159 __ ____**

2 Enter **0** Display shows: **P159 __ 2902** (for example)
The display shows the stored distance between bottom plate and optocoupler sLift (29).
The value **02** denotes that, during the previous adjustment, the lift was set 2 (two) steps higher

3 Enter **H**
The lift will automatically synchronize at the position "optocoupler sLift" and afterwards the stepper motor tries to move the lift against the bottom plate.

Display shows: **P159 __ ___0**

4 Enter **H**
The lift is moved automatically to tray 49 (reference tray). Now you can perform corrections of the lift position corresponding to the position of tray 49 (see figure 4).

Display shows **P159 __ __00**

5 Use the keyboard of the phonograph to manually grip or to put back a CD tray (see figure 4).
The lift can be moved in single steps up or down. There–by the actual height correction value is displayed (e.g. "P159 .. ...01")
The gripper can be moved manually by turning the right lift leading shaft.

6 Enter **H**
The displayed height correction value is saved to the non–volatile memory IC4
The setting of the lift reference is now terminated. The lift moves back to the bottom plate
If an error occurs while moving or if the height correction value is > 10 the "error" lamp will blink and the old value is unchanged

7 Enter **H** Display shows **P160 __ ____**
The program steps to the next service program step

Pressing the **C** button on the keypad at any stage (1. to 7.) will interrupt this program step and the original values are unchanged

Alternatively to this step–by–step routine you can use an automatic routine.

1 Call up the service program step "P159" (P159 +H)

2 Enter **1 + H**
There is no pause between sychronisation at the bottom plate and moving to the reference position (tray 49)

3 Use the keyboard of the phonograph to manually grip or to put back a CD tray (see figure 4).
The lift can be moved in single steps up or down. There–by the actual height correction value is displayed (e.g.: "P159 .. ...01")
The gripper can be moved manually by turning the right lift leading shaft.

4. Enter **H**
   The displayed height correction value is saved to the non–volatile memory IC4.
   The setting of the lift reference is now terminated. The lift moves back to the bottom plate.
   If an error occurs while moving or if the height correction value is > 10 the "error" lamp will blink and the old value is unchanged.

5. Enter **H** Display shows: **P160** __ ____
   The program steps to the next service program step.

Pressing the **C** button on the keypad at any stage (1. to 5.) will interrupt this program step and the original values are unchanged.

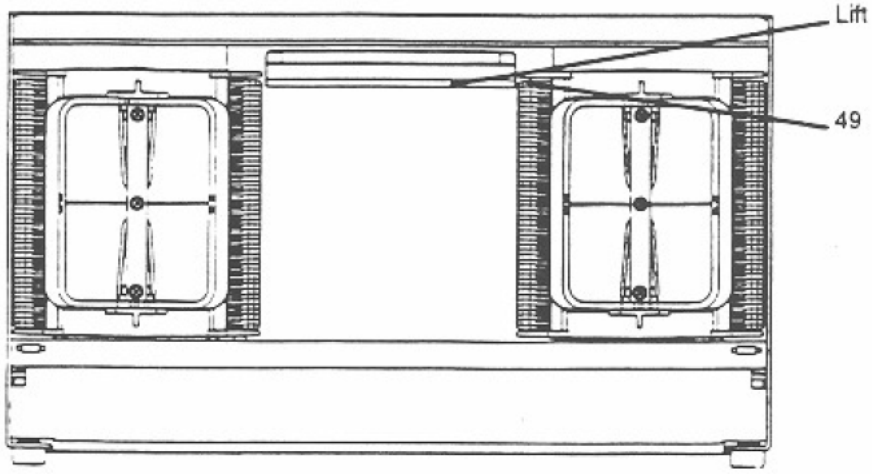

Figure 3 Front view with lift in front of tray 49

During the service program step P159 the keyboard of the CD changer serves the following functions:

1	not used
2	not used
3	Drive lift one motor step upwards
4	Grip tray from left magazine
5	Insert tray into magazine
6	Grip tray from right magazine
7	not used
8	not used
9	Drive lift one motor step downwards
0	not used
C	Cancel procedure
H	Store displayed lift correction value

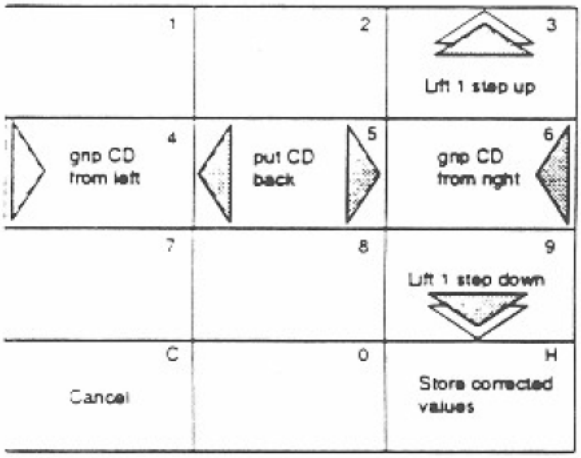

Figure 4 Keyboard layout during service program P159

3.3. Manual control of the MBC III (P157)

For checking the functions of the "MBC III" it may be controlled manually using the service program step "P157".

3.3.1 P157.0: Manual control of the CD–changer with testing the CD–player

After selection of the service program step "P157" the status of the optocouplers of the "MBC III" will be displayed on the phonograph's display:

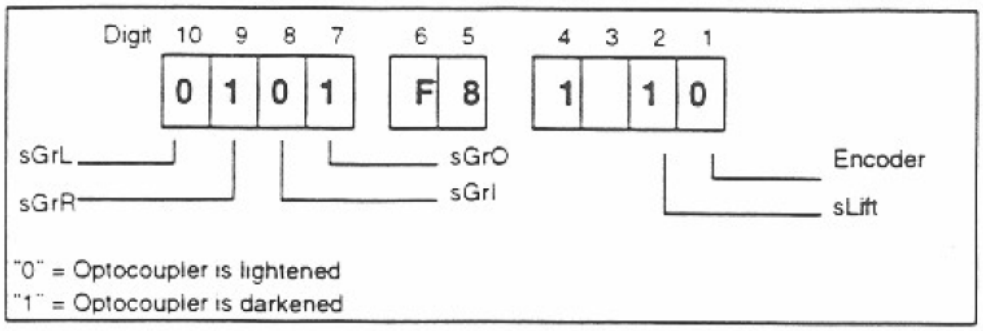

Figure 5: Separation of the phonograph's display for displaying the status information

During "P157.0" the keypad buttons of the phonograph serve the following functions if no CD is placed on the CD–player

A: No CD on player

1	not used
2	Drive lift upwards
3	Drive lift one motor step upwards
4	Grip tray from left magazine
5	Insert tray into magazine
6	Grip tray from right magazine
7	not used
8	Drive lift downwards
9	Drive lift one motor step downwards
0	Insert tray into magazine Drive lift in home position
C	Leave service program
H	not used

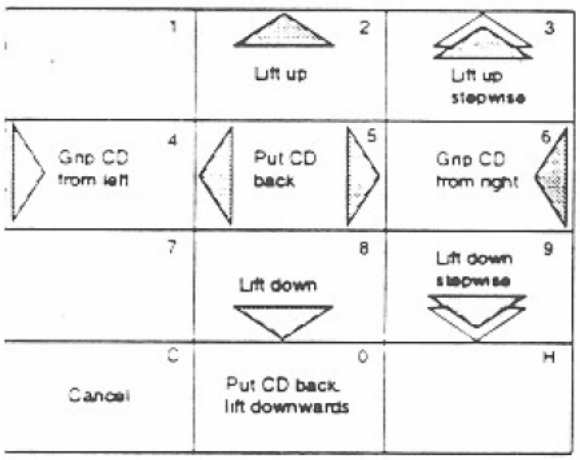

Figure 6: Keyboard layout during service program P157.0 **without CD on player**

During "P157.0" the keypad buttons of the phonograph serve the following functions if a CD is placed on the CD–player:

B: CD on player

1 CD–Player Start/Pause
2 Fast play forward
3 Play next track
4 Put last CD on player
5 Insert tray into magazine
6 Put the next CD on player
7 not used
8 Fast play backward
9 Playing of the last track
0 Stop / Return CD
C Leave the service program
H Change to the next service program

1 CD–Player Start/Pause Stop Fast play	2 Fast play forward	3 Play next track
4 Put CD back grip last one	5 Insert tray into magazine	6 Put CD back, grip next one
7	8 Fast play backward	9 Play next title
C Cancel	0 Stop CD, return CD	H

Figure 7 Keyboard layout during service program P157.0 **with CD on player**

3.3.2 P157.1: Manual control of the CD–changer without testing the CD–player

The keypad layout for P157.1 is nearly the same as for P157.0 without CD (see figure 6). Additionally the lift motor can be set to a currentless state thus to move the motor manually to check the lift for stiffness.
Use key "1" or "7" to switch between left and right magazine to pick a CD–tray.
Use key "H" to center the lift to the next CD–tray in a magazine.

Manual control

1 Put selector motor "MaGr" to left hand access
2 Move lift upwards
3 Move lift upwards in single steps
4 Grip CD–tray from the left magazine
5 Put CD–tray back into magazine
6 Grip CD–tray from the right magazine
7 Put selector motor "MaGr" to right hand access
8 Move lift downwards
9 Move lift downwards in single steps
0 Set lift motor to currentless state
C Cancel
H Center lift to the next CD–tray

1 Put selector motor MaGr to left	2 Lift up	3 Lift up stepwise
4 Grip CD from left	5 Put CD back	6 Grip CD from right
7 Put selector motor MaGr to right	8 Lift down	9 Lift down stepwise
C Cancel	0 Lift motor currentless	H Center lift to next CD–tray

Figure 8 Keyboard layout during service program P157.1 **without CD**

Press C to leave service program step P157.1.

4. Exchange of components

Caution: Before exchanging a unit or demounting parts of the device, pull out the phonograph's mains connection first!!

4.1. MBC–Controller

When exchanging the CB CONTROLLER–MBC III please consider the following:

The memory chip IC4 located on the CB stores all necessary non–volatile data as

– Lift reference

– Gripper reference

– Number of tray inside the lift.

Take care that before the exchange of the CB CONTROLLER no tray remains inside the lift (if necessary push out manually by turning the left lift shaft).

After exchange of the CB the lift and gripper reference have to be readjusted. Therefore see chapter 3 (Settings).

In case that the memory chip IC4 on the disassembled CB is still o.k., it can be pulled out of its socket and exchanged with the one on the newly assembled CB. The previous adjustments are then preserved and do not have to be repeated.

After the exchange of the MBC–Controller verify all functions of the device.

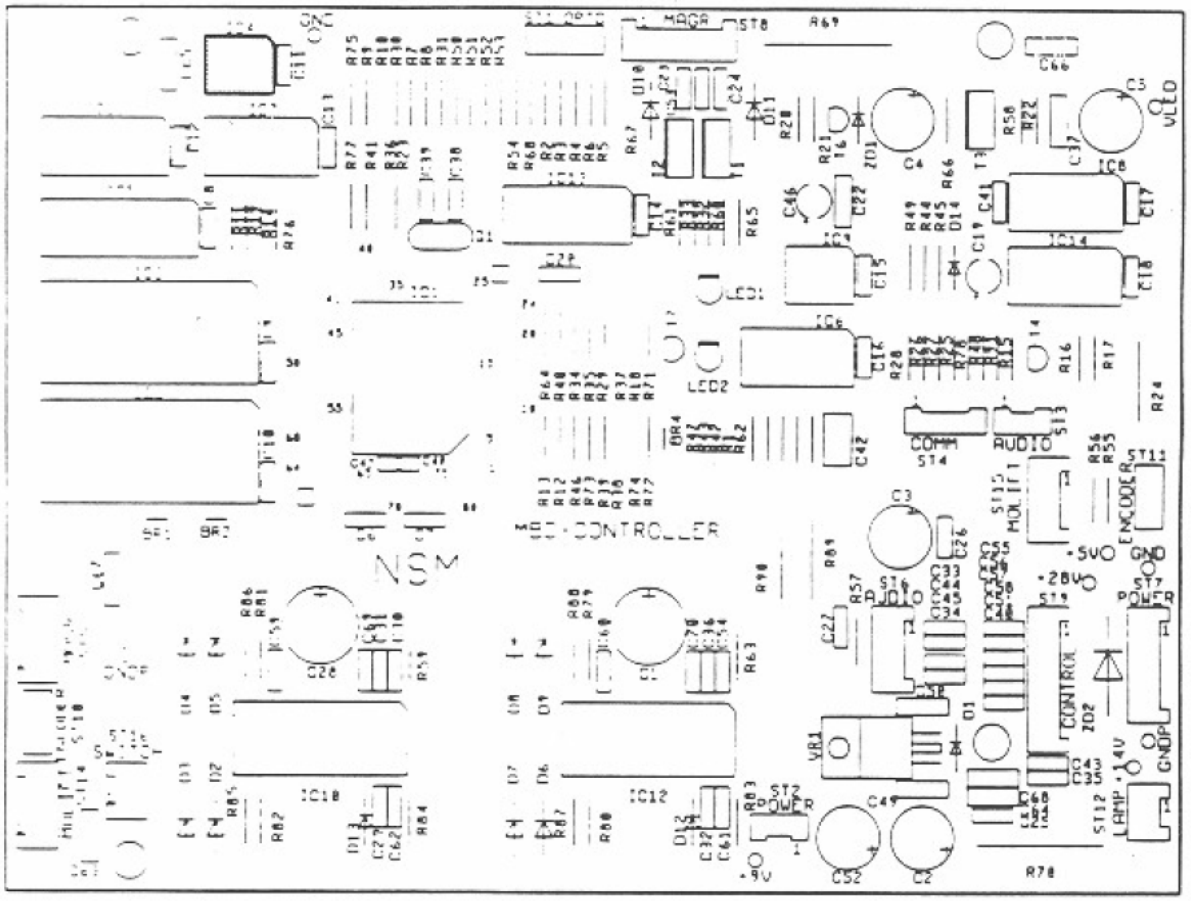

Figure 9 Position of IC4 on the CB "CONTROLLER–MBC III".

4.2 Test for Opto Diagnosis P154

The MBC III CD changer is built in a way which offers the possibilities to check each optocoupler with service program step P154. Using this program step, it is possible to tell if any of the 5 optos in the MBC III changer is performing poorly. This is done as follows:

- Open the phonograph and enter the service mode by pulling out the service switch.
- Press **C** on the keypad.
- Press **154 H 0.**
- The MBC III changer will then check each opto in succession by performing certain lift movements. Afterwards, a relative value denoting the supply voltage is displayed. This number should be between **165** and **195.**
- Now check each optocoupler by pressing the corresponding key:

Key **1** = **sLift** opto.	Value should be between **25** and **80**. Otherwise, change opto.
Key **2** = **sGrO** opto.	Value should be between **25** and **80**. Otherwise, change opto.
Key **3** = **sGrI** opto.	Value should be between **25** and **80**. Otherwise, change opto.
Key **4** = **sGrR** opto.	Value should be between **15** and **75**. Otherwise, change opto.
Key **5** = **sGrL** opto.	Value should be between **15** and **75**. Otherwise, change opto.

Note: This test is a performance test, and requires all optos to be at least minimally functional. If there is the value "100", so the corresponding opto may be dead. Is the opto coppler illuminated with stray light, a value of "00" is determined. In this case, cover the opto during the test.

4.3 Repairs at the lift of MBC III

Removal and installation are carried out as follows.

Removal:

1 Remove the frontal cover.

2 Take out the magazines.

3 Remove the screws on the backside of the device.

4 Loosen the upper and the two backwards located screws of the right and the left side wall. Lift off the L–shaped outer plate.

5 Lay down the device upside–down and remove the four holding screws. Take off the bottom plate.

6 Remove the both Benzing lock washers from the ends of the lift spindles and take out the washers.

7 In order to remove the selector motor (MaGr) pull out its mains connector and loosen the fixing screws from the motor end shield.

8 Loosen the grip motor and remove the toothed belts from the right lift spindles.

9 In order to take out the right toothed belt remove the right Benzing lock washer from the spindle axle. Hold the toothed belt in position and push its washer to the right hand side.

10 Replace the device in upright position, remove the bearing housing from the upper mounting plate and pull out to the top the lift spindles (thereby also pull out the switch of the left lift spindle)

11 Place the device on the front side and loosen the supporting screws; open both rocking levers to slacken the toothed belts

12 Take the toothed belts off the toothed wheel and push the loops deeper into the gaps of the lower mounting plate so that now you can remove the toothed belts from the lower wheels.

13 Take the lift out of the device

14 For removal of the two toothed belts take their ends out of the holding clamps of the lift.

Installation:

15. After having pressed in the ends of the toothed belts with 4 teeth insert the lift into the device so that the NSM logo is frontally located.

16. The lift spindle with the twice stepped ends has to be pushed carefully turning from the front through the upper mounting plate and the bearings of the lift, so that the carrier springs in the lift bearings correspond to the groove of the spindles, and then through the bearings into the lower mounting plate. The left lift spindle synchronically has to be inserted into the switch of the selector motor.

17. Insert the upper bearing housings with the spring washer and screw down the bearings.

18. Place the paired ends of the lower toothed belts around the two lower belt washers, so that the lift can be pulled parallely to the mounting plate.

19. Adjust the belt tension with the belt stretchers and fix it with the supporting screws.

20. Place the device upside–down.

21. Lock the switch at the left lift spindle with washer and locking washer.

22. Screw down the selector motor with the fixing screws. Insert the control lever with its plug into the slot of the switch lever. Take care that friction only emerges within the slot. Therefore insert distance sleeves. The switch lever has to be placed in its final position.

23. Place the double stepped driving wheel on the right lift spindle so that the bigger wheel is located in direction of the lift spindle on the inner side.

24. Replace the toothed belt and remount the grip motor.

25. Turn the flywheel of the grip motor to the left side up to the stop and the switch segment control wheel with a lefthand rotation into the left optocoupler so that the segment (diaprahgm) will almost darken the range of this optocoupler

26. Place the toothed belt in this position onto the smaller belt wheel.

27. Secure the toothed belt wheel with the Benzing lock washer after having mounted the flanged wheel

28. Turn the flywheel to the right hand side up to the stop.The switch segment control wheel must darken the right optocoupler

29. By turning the control wheel several times into its final position check the position of the switch segment (diaphragm) with regard to the two optocouplers. Make sure that the darkening of the optocouplers in the final position is symmetrically. The switch segment is connected with the control wheel by a long hole so that a fine adjustment can be made

30. Place the toothed belt for the lift transportation onto the belt wheel, fit the 4 fifth–wheel king pins into the counterpart located on the spindle and replace the Benzing lock washer.

31. Place the device face up and adjust the grip– and lift reference (see section adjustment of grip– and lift reference)

32. Verify the functioning of the device and remount the bottom– and the outside plates.

5.Spare parts list:

Pos.	Part–No.	Description	Data	Quantity.
	179 530 *	**CD–CHANGER MBC III–PRO, w/o magazine**		1
X	140 285	Shock absorber (***Before installing the CD–changer into a Sapphire you must remove the shock absorbers.***)		4
1	178 136	Magazine w/o disc holder		2
2	140 024	Disc holder single	Tablett	50
3	140 218	Front door, complete	(with plate)	1
4	140 212	Plate	single	1
5–8	179 456	Cabinet plate, pasted MBC III		1
5	179 460	Cabinet plate		1
6	212 958	Mirror MBC III		1
7	212 939	Cover plate		1
8	179 437	Design foil MBC III, blue		1
	300 264	Scotch tape 6mm white	560mm long	1

* = Exchange unit

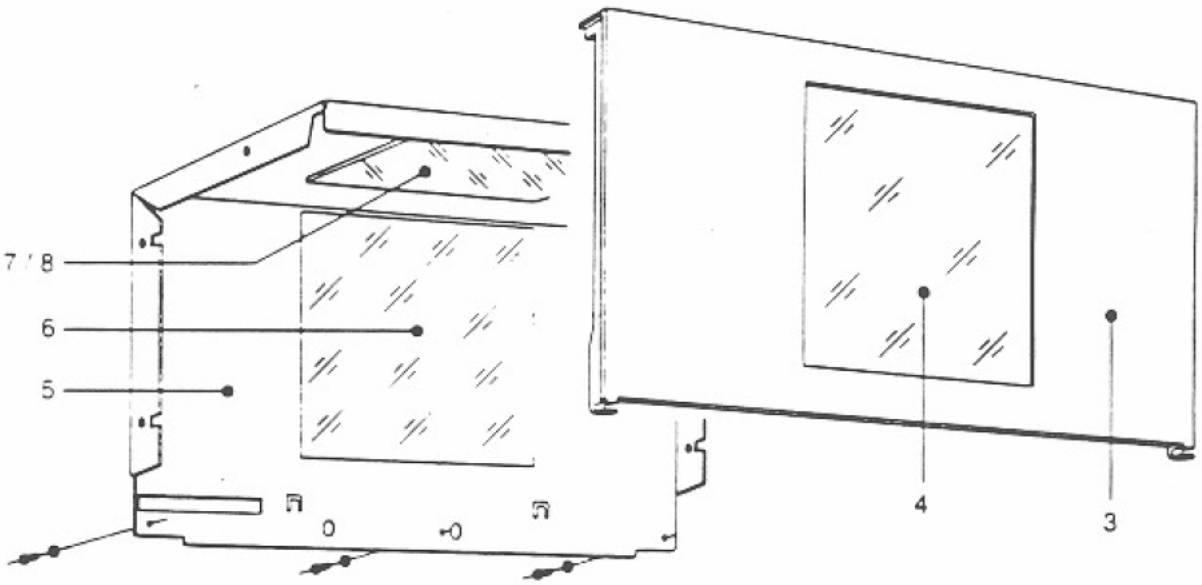

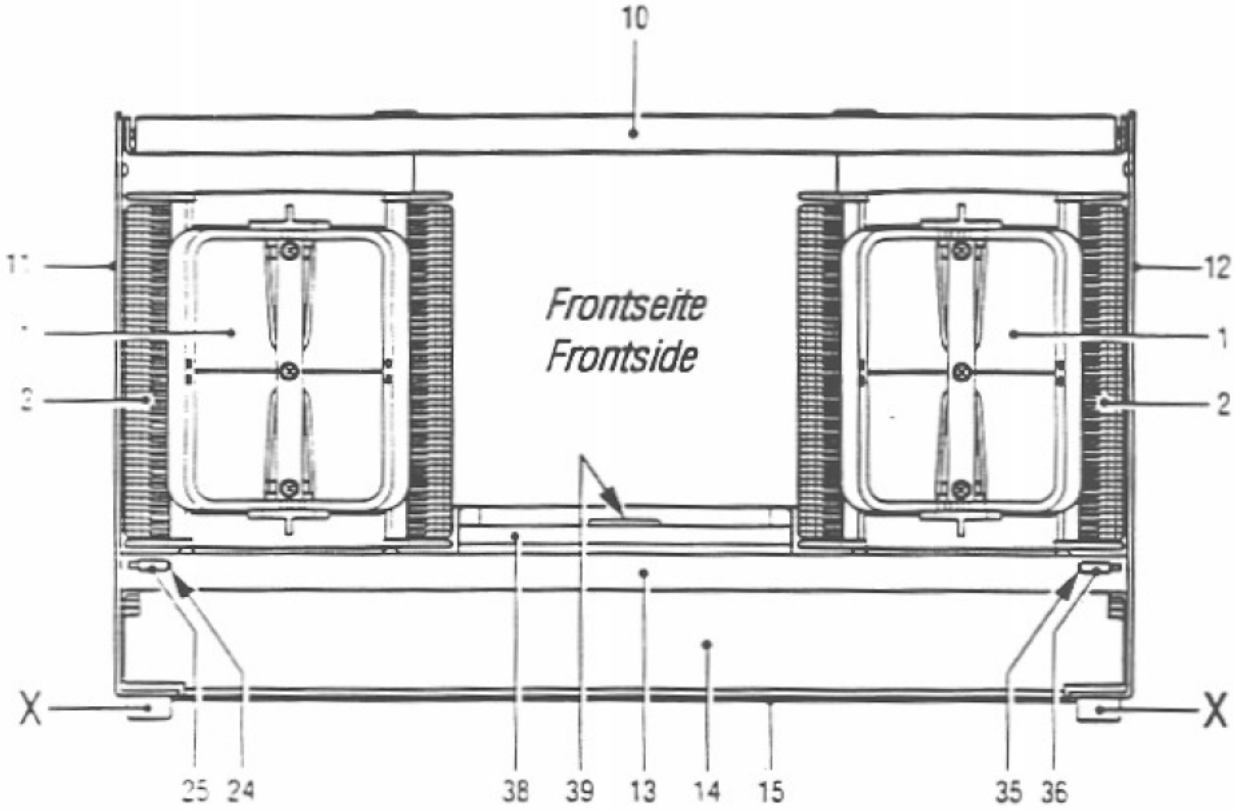
10
Frontseite
Frontside
12
1
2
X
X
25 24
38 39 13 14 15
35 36

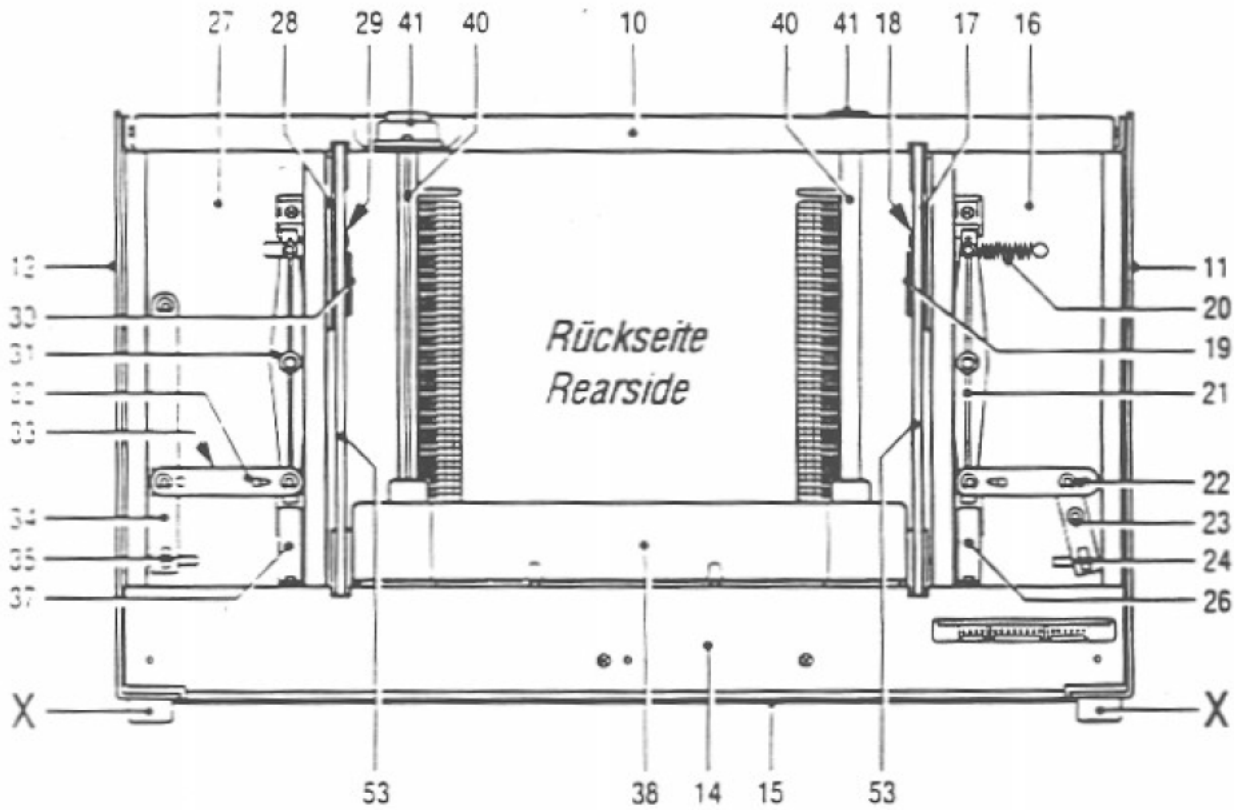
27 28 29 41 40
10
40 41 18 17 16
Rückseite
Rearside
11
20
19
21
22
23
24
26
X
X
53
38 14 15
53

Pos.	Part–No.	Description	Data	Quantity.
10	179 182	Lid		1
11	179 188	Side wall left, riveted		1
12	179 189	Side wall right, riveted		1
13	140 315	Back plate, complete		1
14	179 184	Base plate, riveted		1
15	140 265	Base plate		1
16	179 128	Profile left, riveted		1
17	141 135	Guide plate, riveted		1
18	141 140	Guide ring		1
19	205 614	Tension spring	Guide plate	1
20	205 877	Tension spring	magazine	1
21	140 082	Catch lever left, mounted		1
22	140 058	Connection lever		1
23	140 080	Connection piece short, riveted		1
24	140 055	Opening lever		1
25	140 054	Cap		1
26	140 234	Leaf spring		1
27	179 185	Profile right, riveted		1
28	141 135	Guide plate, rivetd		1
29	141 140	Guide ring		1
30	205 614	Tension spring	Guide plate	1
31	140 083	Catch lever right, mounted		1
32	140 058	Connection lever		1
33	205 877	Tension spring	magazine	1
34	140 081	Connection piece long, riveted		1
35	140 055	Opening lever		1
36	140 054	Cap		1
37	140 234	Leaf spring		1
38	140 313	Lift, complete	MBC III	1
39	140 221	Protective plate, complete		1
40	180 754	Bar	lift	2
41	140 127	Bearing housing, mounted		4

Von unten gesehen
Bottom view

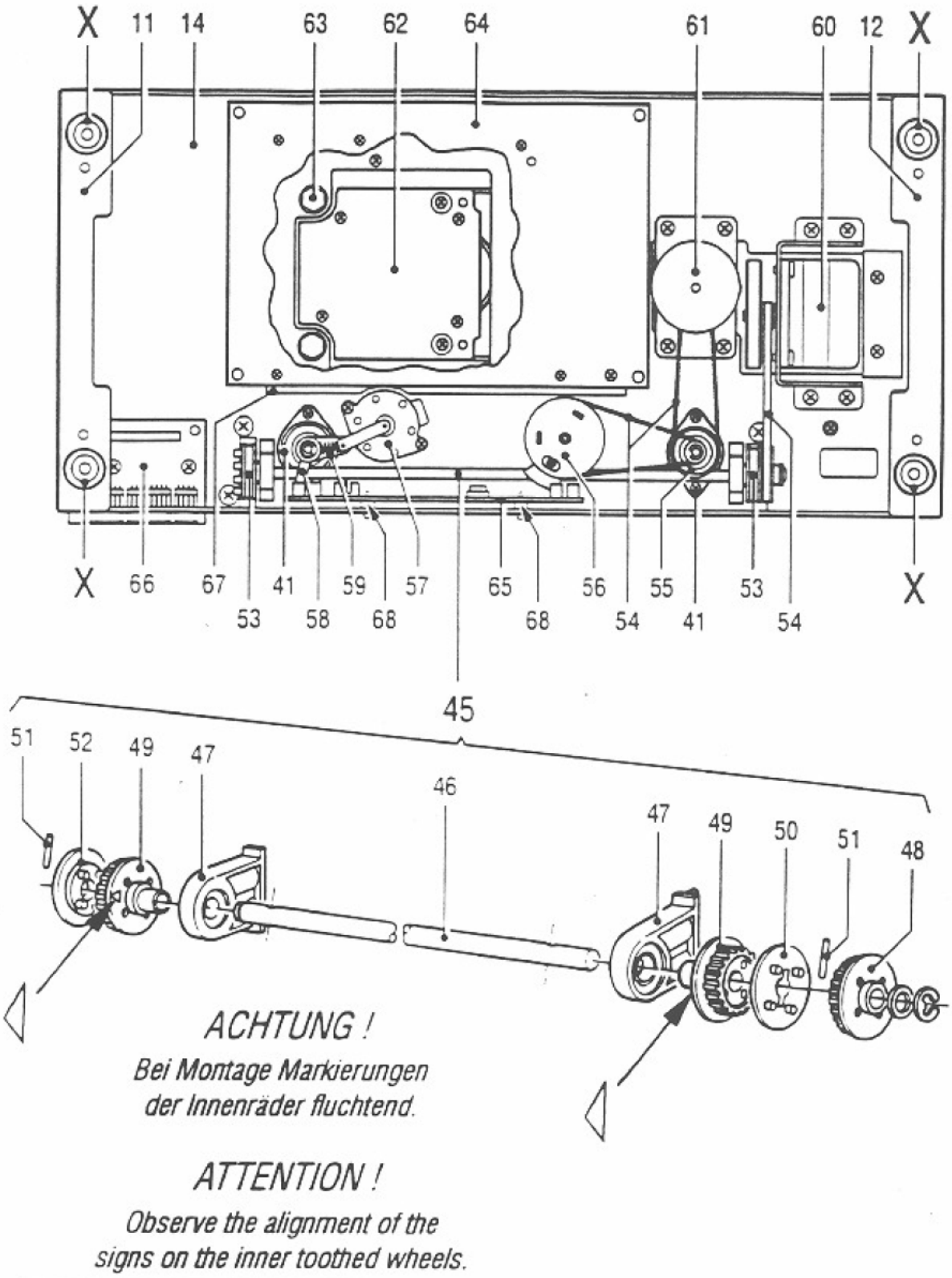

Pos.	Part–No.	Description	Data		Quantity.
45	**140 139**	**Bar, mounted**	driving axle		1
46	211 723	Bar			1
47	140 162	Bearing block, mounted			2
48	140 172	Outer wheel	Z 40		1
49	140 173	Inner wheel	Z 25		2
50	140 174	Transmission washer			1
51	726 013	Needle rolle	B2,0 x 13,8		2
52	179 167	Pivot washer			1
53	216 283	Toothed belt	3MR–492	lift	2
54	216 281	Toothed belt	2MR–224		3
55	140 175	Driving wheel II, mounted			1
56	140 128	Control wheel, complete			1
57	140 150	Motor, mounted			1
58	140 148	Switch lever			1
59	205 892	Tension spring			1
60	178 743	Motor 23 LM, complete			1
	178 641	Distance piece	for motor		4
61	178 744	Motor 17 PM, complete			1
	178 641	Distance piece	for motor		4
62	179 195 *	CD–Player CD–PRO, mounted			1
63	140 321	Rubber base, mounted			4
64	178 963 *	CB CONTROLLER – MBC III	*see page 25*		1
65	179 192	CB OPTO, complete	*see page 27*		1
66	179 193	CB ADAPTER MBC III, complete			1
67	179 063	Isolating plate	CB CONTROLLER		1
68	179 054	Spacer bolt	CB OPTO		2
	227 642	Cable set for CD–Player	Power	4 pin	1
	227 642	Cable set for CD–Player	Audio	4 pin	1
	227 643	Cable set for CD–Player	DSA	6 pin	1
	140 243	Cable harness Encoder	250 mm long	6 pin	1
	140 238	Cable harness OPTO	80 mm long	8 pin	1

* = Exchange unit

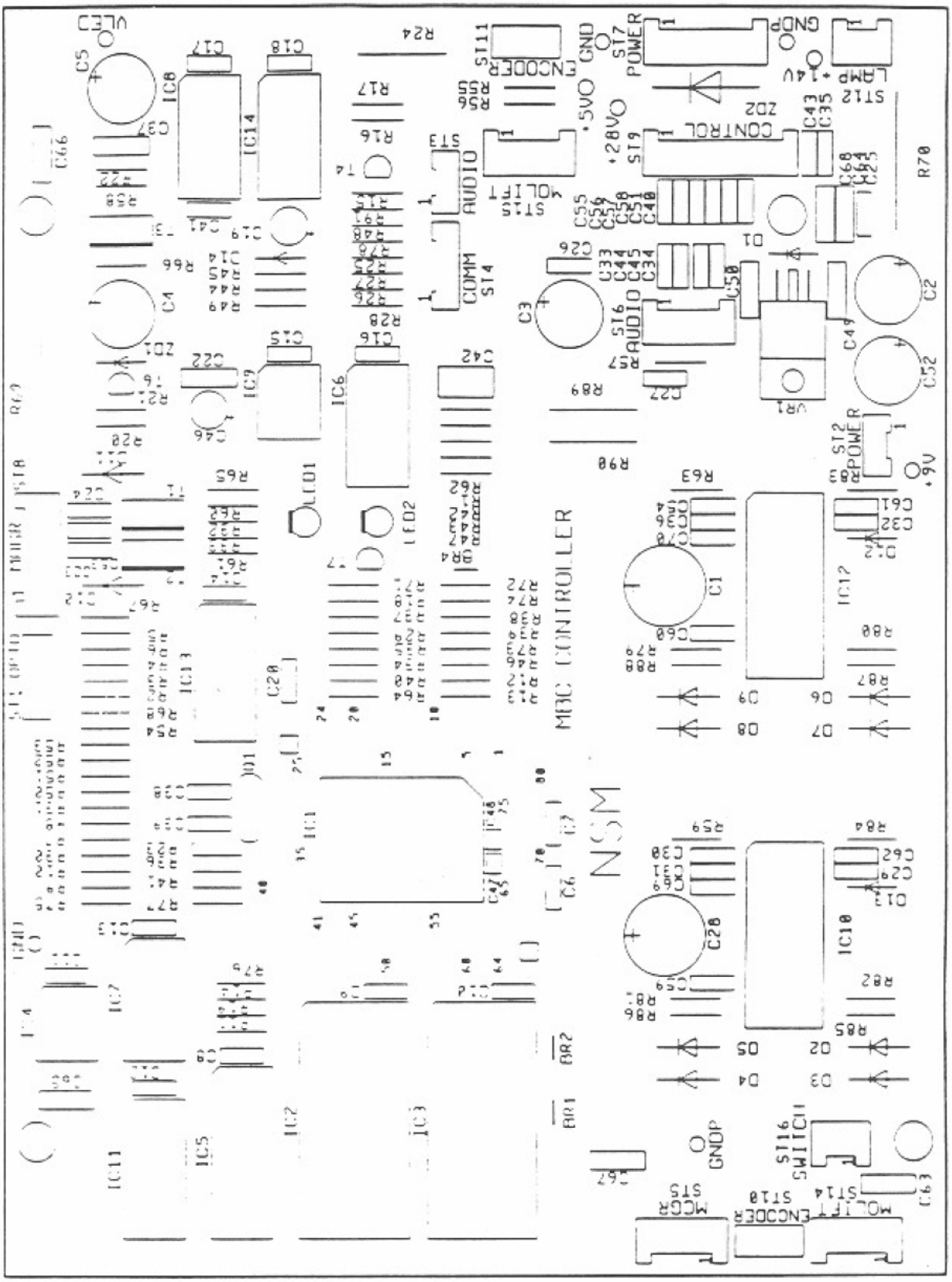
MBC CONTROLLER
NCSM
POWER
CONTROL
AUDIO
COMM
ENCODER
SWITCH
MOLIFT
MCGR
GND
GNDP
+5V
+28V
+9V
+14V
VLED

Pos.	Part–No.	Description	Data	Qantitiy
	178 963 *	**CB CONTROLLER–MBC III, assy**		1
	140 275	Distance plate		1
ST2, 3	235 120	Pin plug	straight 4 pin	2
ST4	235 121	Pin plug	straight 6 pin	1
ST10, 11	225 872	Socket	AMP–Micro–Match 6 pin	2
ST1	235 074	Socket	AMP–Micro–Match 8 pin	1
ST12	225 650	Pin panel	standing 2 pin	1
ST5, 6, 14, 15	225 651	Pin panel	standing 4 pin	4
ST7, 8	225 652	Pin panel	standing 6 pin	2
ST9	225 653	Pin panel	sandingt 8 pin	1
Semiconductors:				
IC 1	231 791	IC–Micro computer	M37732S4BFP	1
IC2	140 371	IC–Memory	programmed	1
IC2	222 447	IC–Socket	28 pin	1
IC3	231 444	IC–Memory	HM6264–LP–12	1
IC3	222 447	IC–Socket	28 pin	1
IC4	231 792	IC–Memory	FM24C04	1
IC4	222 307	IC–Socket	8 pin	1
IC6	231 633	IC–Logic	PC74HC08P	1
IC7	231 632	IC–Logic	PC74HC02P	1
IC8	231 808	IC–Logic	74HC393	1
IC11	231 804	IC–Logic	74HC139	1
IC13	221 810	IC–Logic	HEF4050BP	1
IC14	231 809	IC–Logic	74HC74	1
IC5	231 807	IC–Logic	74ALS245	1
IC9	231 431	IC–Interface	TL7705ACP	1
IC10, 12	231 794	IC–Motor driver	PBL 3774	2
VR1	231 806	IC–Voltage regulator	L4940V85	1
Q1	231 567	Quarz	16 MHz	1
T1, 2, 3	231 150	Darlington–Transistor	NPN TIP130	3
T4	221 459	Si–Transistor	PNP BC556B	1
T6, 7	221 757	Si–Transistor	NPN BC547B	2
LED1, 2	221 466	Luminescence–Diode	TLUR 440.1	2
ZD1	221 512	Si–Zener–diode	ZPD 12	1
ZD2	221 539	Transzorb diode	IC TE–5	1
D2 – D11	231 863	Si–diode	UF 4004	10
D1, 12, 13, 14	221 114	Si–diode	1N4148	4

* = Exchange unit

Pos.	Part–No.	Description	Data		Qantitiy

CB CONTROLLER–MBC III, continued

Capacitors:

C46	220 159	Electrolytic capacitor	4,7 µF	63V	1
C19	220 249	Electrolytic capacitor	1 µF	63V	1
C2, 3 4, 5, 52	220 250	Electrolytic capacitor	100 µF	25V	5
C1, 28	220 551	Electrolytic capacitor	470 µF	40V	2
C20, 38, 39, 41	220 266	Ceramic capacitor	27 pF	400V	4
C40 43 44 45, C55–58	220 185	Ceramic capacitor	270 pF	400V	8
C63–C68	220 344	Ceramic capacitor	0,022 F	63V	6
C6–C18 C23–C27, C53 C59–C62	220 498	Ceramic capacitor	100 nF	63V	23
C33 34 35 51	220 142	KT–type capacitor	1000 pF	100V	4
C29–32 36 54	220 401	KT–type capacitor	3300 pF	63V	6
C69 70	220 435	KT–type capacitor	4700 pF	63V	2
C22 37 49 50	220 334	MKT–type capacitor	0,1 µF	63V	4
C47	220 332	MKT–type capacitor	0,33 µF	63V	1

Resistors:

R85–88	221 626	Resistor	1 Ω	0,34W	4
R64	221 600	Resistor	100 Ω	0,34W	1
R65 71	221 614	Resistor	330 Ω	0,34W	2
R25–28	221 099	Resistor	470 Ω	0,34W	4
R66 79–82 91	221 029	Resistor	1 KΩ	0,34W	6
R57 60–62	221 033	Resistor	3,3 KΩ	0,34W	4
R7–10 R18 34 78	221 034	Resistor	4,7 KΩ	0,34W	7
R15–17 R20–22 72	221 035	Resistor	10 KΩ	0,34W	7
R59 63	221 036	Resistor	15 KΩ	0,34W	2
R29–33 35–56 R58 68 73–77	221 604	Resistor	22 KΩ	0,34W	34
R83 84	221 601	Resistor	27 KΩ	0,34W	2
R1–6 67	221 038	Resistor	47 KΩ	0,34W	7
R23	221 009	Resistor	1 MΩ	0,34W	1
R11–14 19	231 527	Met–Resistor, highly flameable	4,7 Ω	0,34W	5
R24	221 152	Resistor	330 Ω	0,5W	1
R89 90	231 139	Metox–Resistor	1,2 Ω	0,5W	2
R69 70	221 169	Wire–resistor	10 Ω	1W	2

Pos.	Part–No.	Description	Data		Qantitiy
	179 192	**CB OPTO, complete**			**1**
ST1	235 074	Sleeve	AMP Micro–Match 8 pin		1
GK1–5	231 322	Opto coupler	LTH–301A–N		5
R1	221 638	Resistor	270 Ω	0.34W	1
R2	221 624	Resistor	220 Ω	0.34W	1

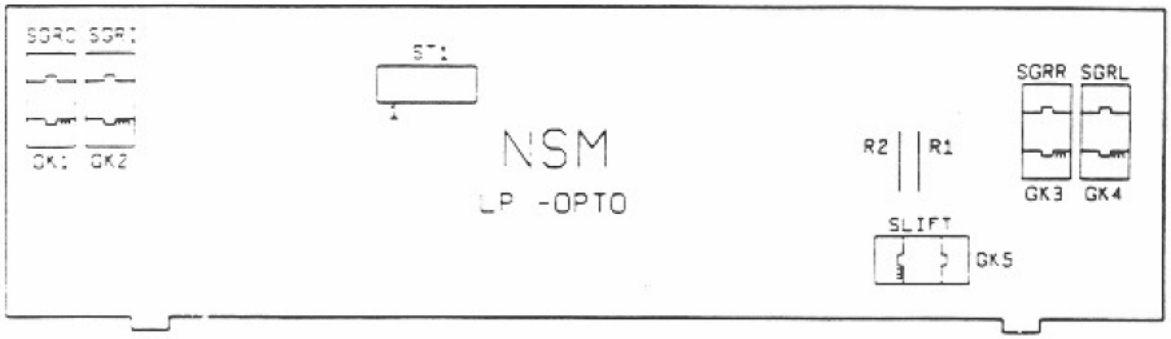

6. Wiring diagrams and board layouts

Bestückungsplan / Board layout of the CB MBC–CONTROLLER

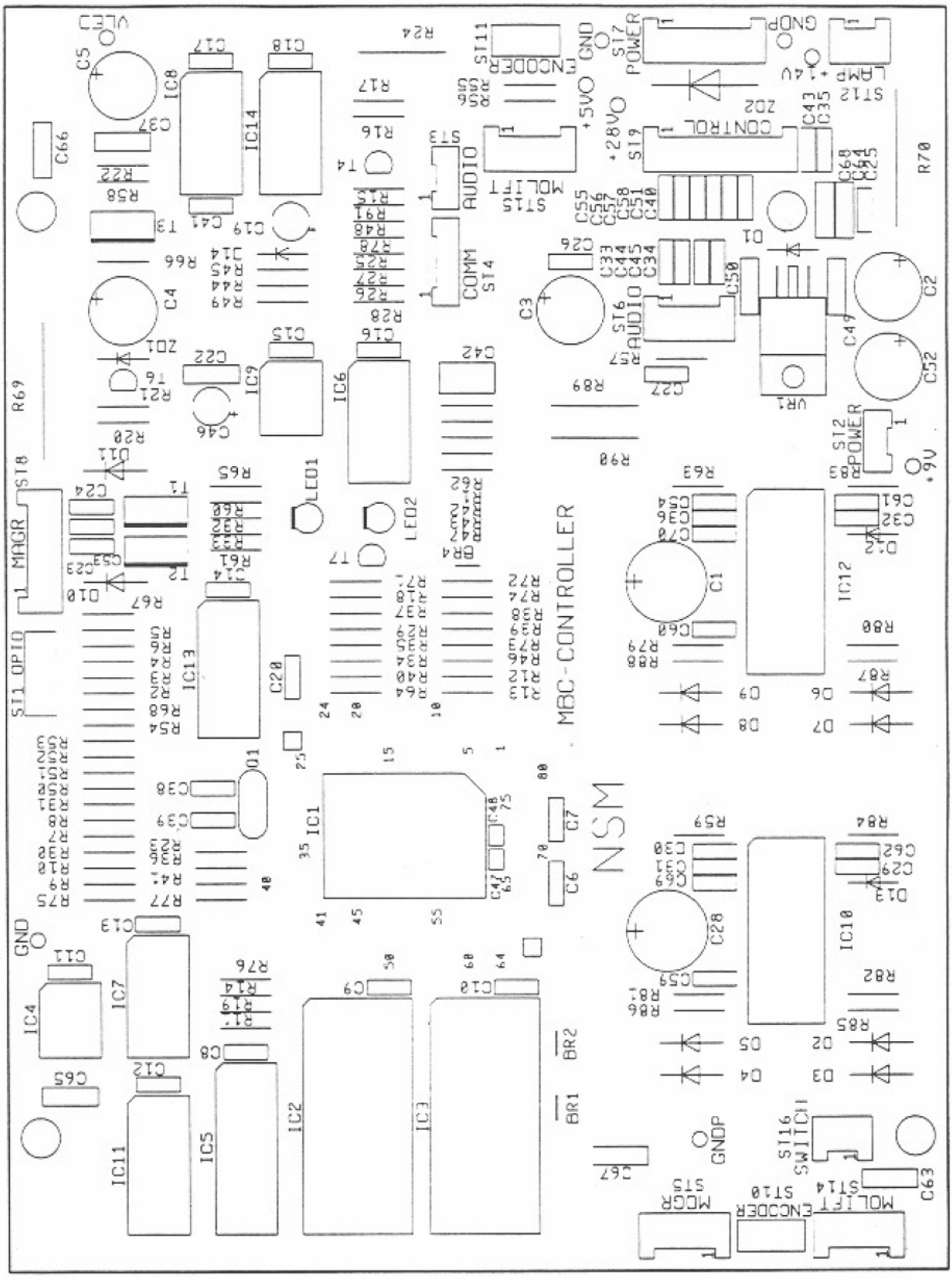

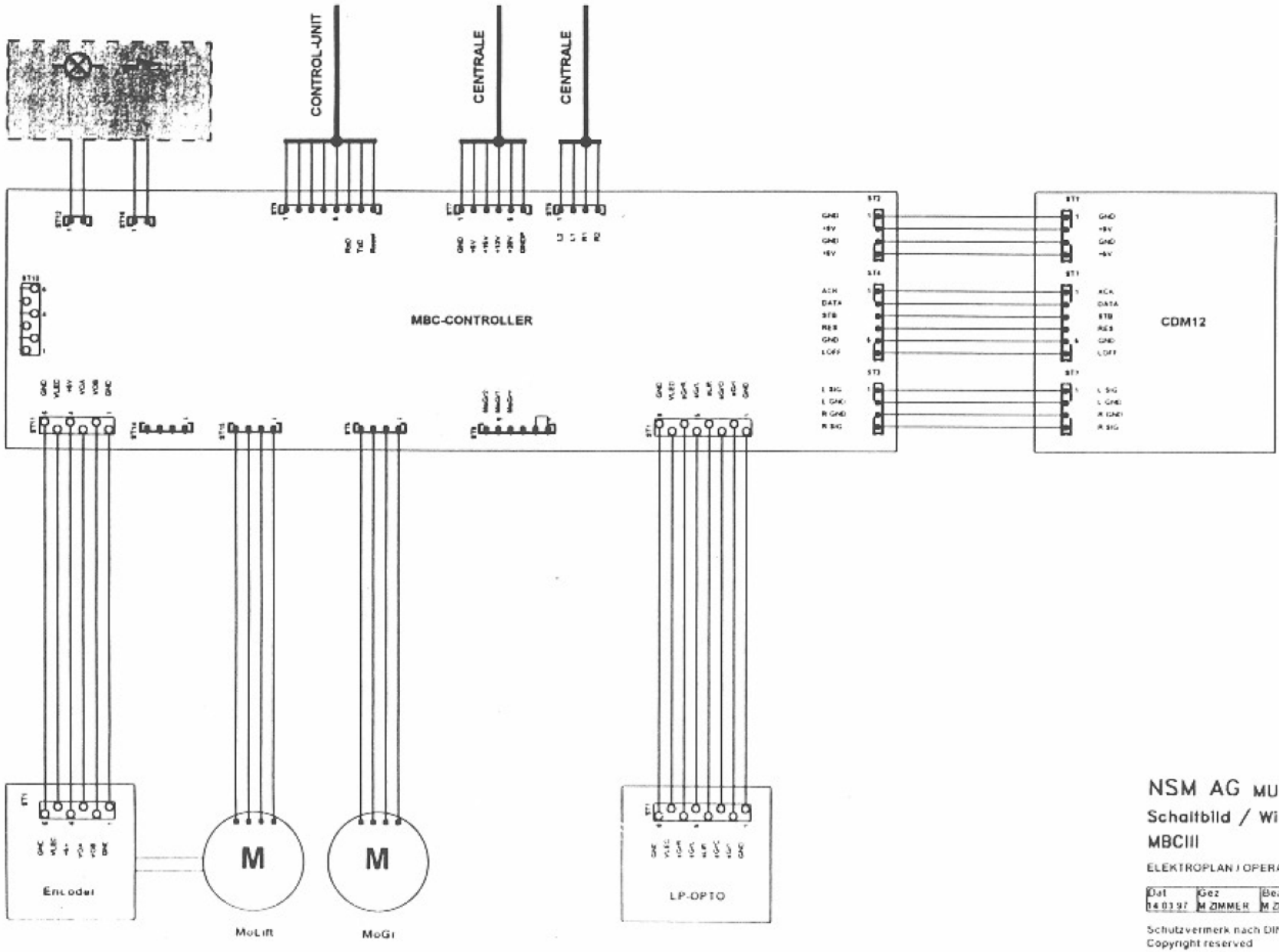

NSM AG MUSIC

Schaltbild / Wiring diagram

MBCIII

ELEKTROPLAN / OPERATING SCHEME

Dat	Gez	Bearb	Gepr
14.03.97	M ZIMMER	M ZIMMER	

BL 1 VON 5 SHEET 1 OF 5

Sachnummer: 179126

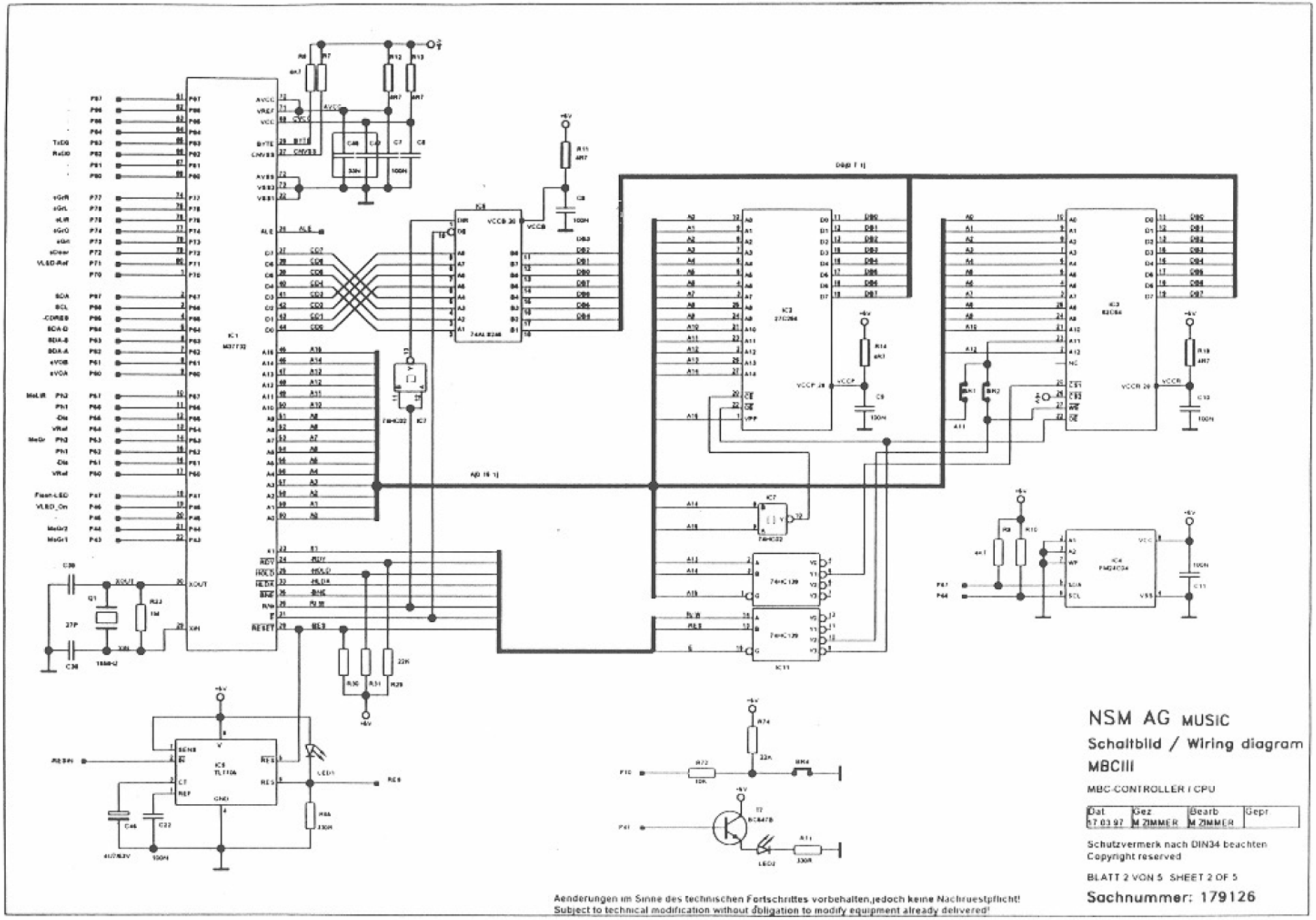
NSM AG MUSIC
Schaltbild / Wiring diagram
MBCIII
MBC-CONTROLLER / CPU
Dat 17 03 97
Gez M ZIMMER
Bearb M ZIMMER
Gepr
Schutzvermerk nach DIN34 beachten
Copyright reserved
BLATT 2 VON 5 SHEET 2 OF 5
Sachnummer: 179126
Aenderungen im Sinne des technischen Fortschrittes vorbehalten,jedoch keine Nachruestpflicht!
Subject to technical modification without obligation to modify equipment already delivered!

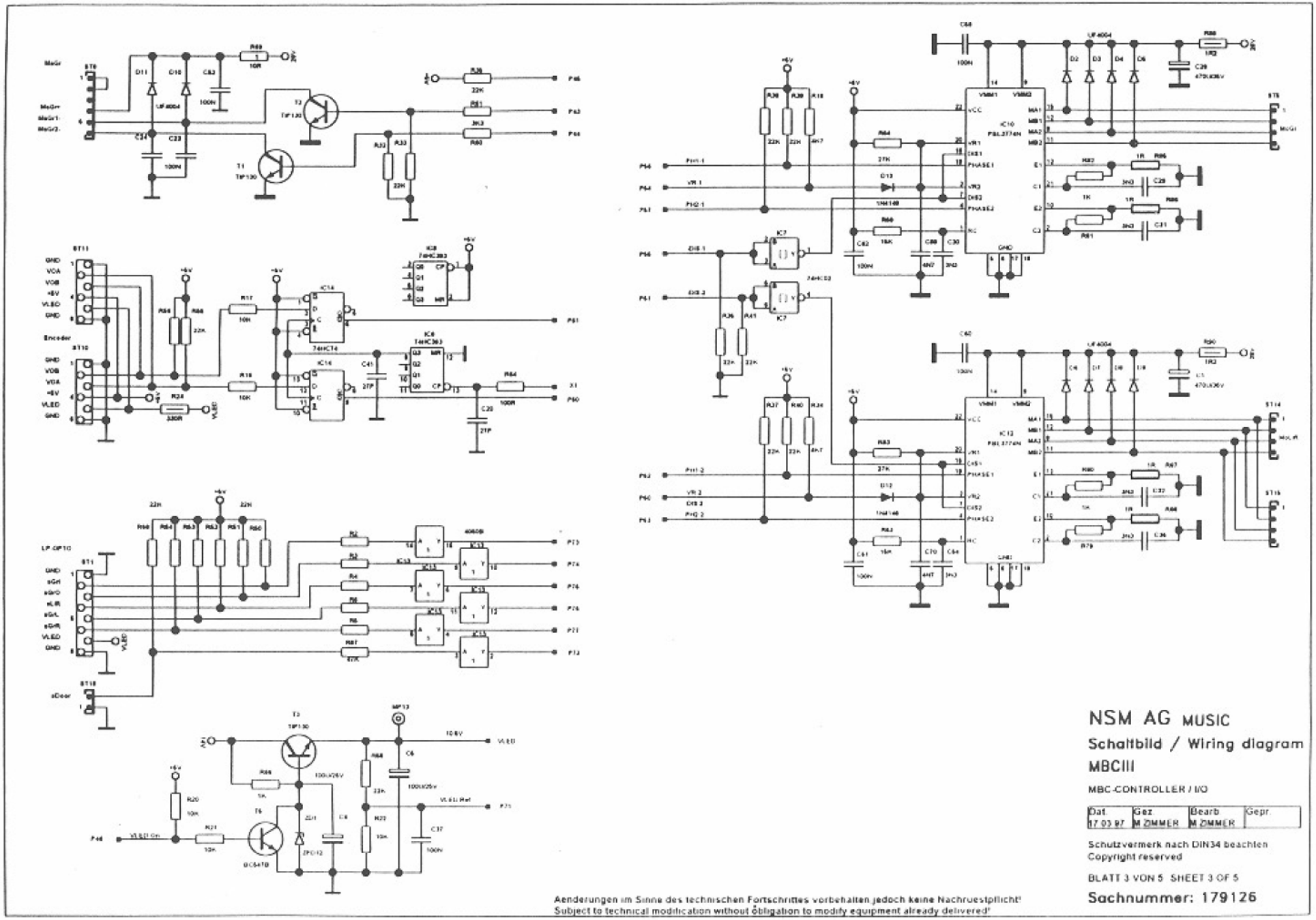

NSM AG MUSIC

Schaltbild / Wiring diagram

MBCIII

MBC-CONTROLLER / I/O

Dat.	Gez.	Bearb.	Gepr.
17.03.97	M ZIMMER	M ZIMMER	

BLATT 3 VON 5 SHEET 3 OF 5

Sachnummer: 179126

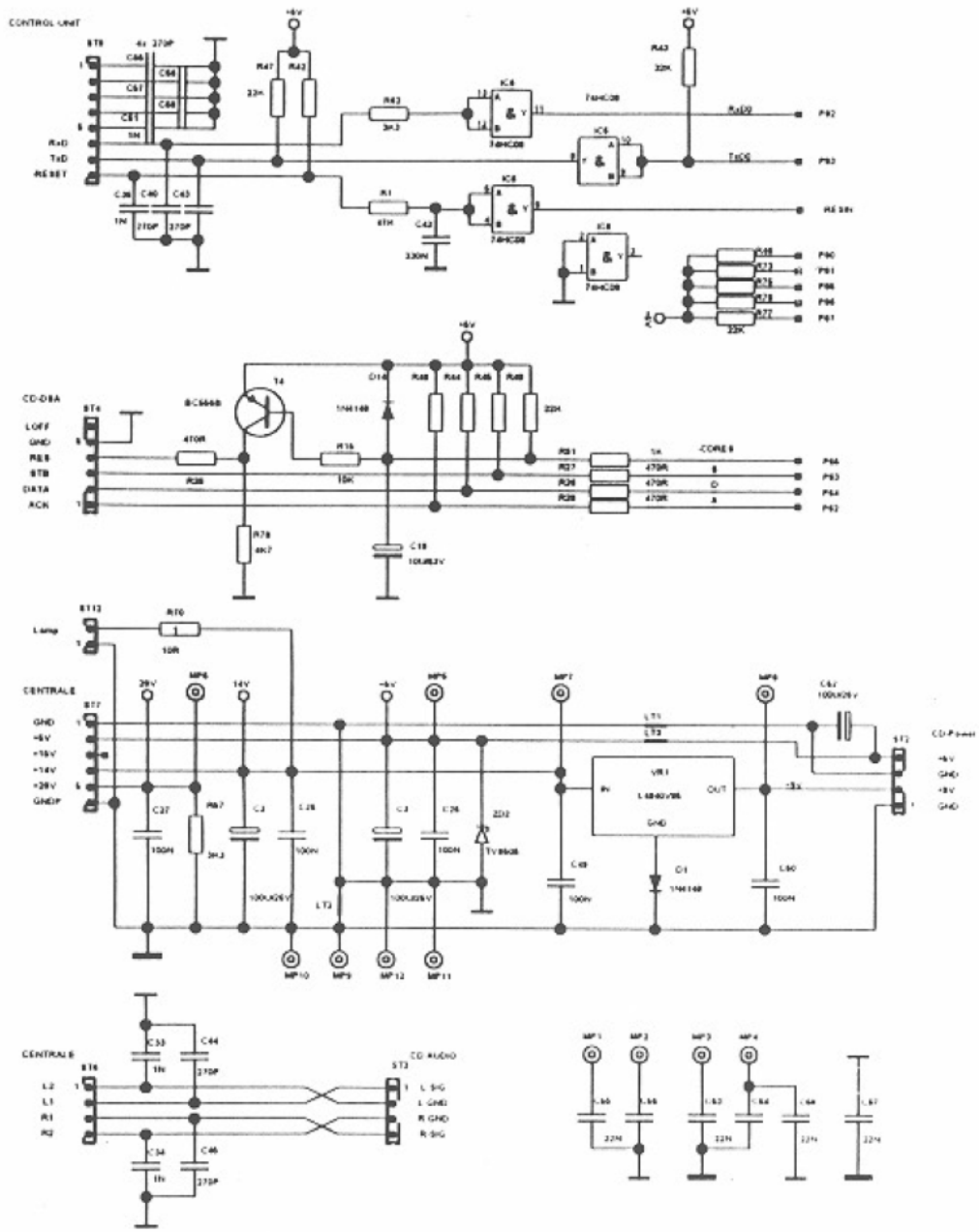

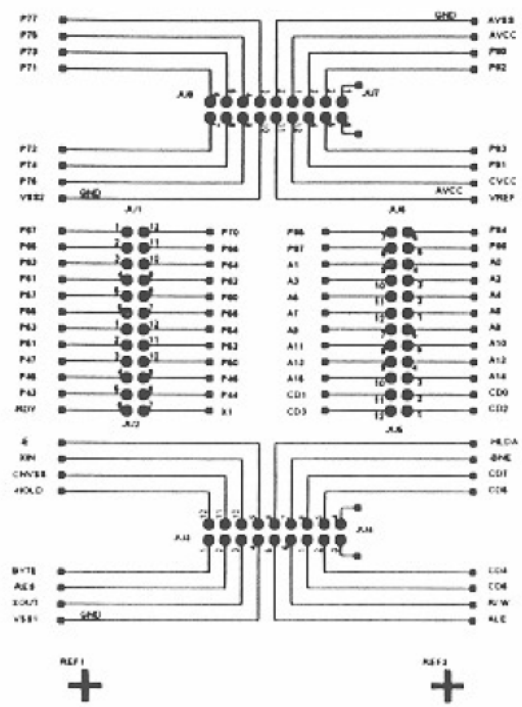

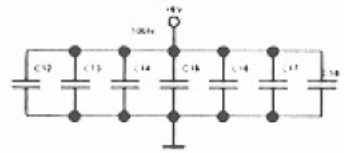

NSM AG MUSIC

Schaltbild / Wiring diagram

MBCIII

MBC-CONTROLLER / DIV

Dat	Gez	Bearb.	Gepr.
17.03.97	M ZIMMER	M ZIMMER	

BLATT 4 VON 5 SHEET 4 OF 5

Sachnummer: 179126

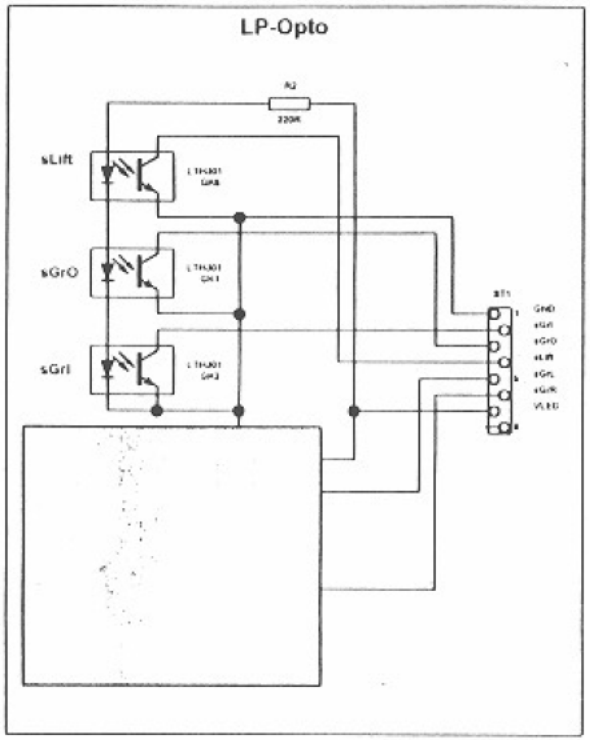

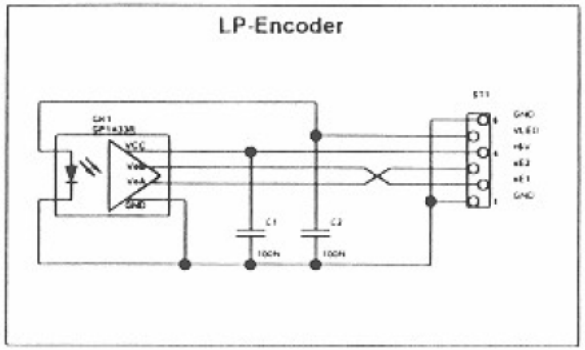

NSM AG MUSIC

Schaltbild / Wiring diagram

MBCIII

SENSORS

Dat	Gez	Bearb	Gepr
17 03 97	M ZIMMER	M ZIMMER	

BL 5 VON 5 SHEET 5 OF 5

Sachnummer: 179126