ROWE®/AMI

CD-100F LaserStar® V

Compact Disc Phonograph

Field Service Manual
& Parts Catalog

Volume 1 of 2

Installation, Programming, Routine Service

PART NO. 21822636
FIRST EDITION

CD-100F

LaserStar® IV

Compact Disc Phonograph

Field Service Manual
And Parts Catalog

Volume 1

ROWE INTERNATIONAL INC.
1500 UNION AVE, SE
GRAND RAPIDS, MI 49507 - 1884
(616) 243-3633

Part No. 21822636
First Edition
First Printing March 1996

This page intentionally left blank.

Preface

To make installation easier, this manual describes a typical installation. This "typical" installation includes loading the title rack and discs, setting up the sound system, and in some situations, modifying the pricing.

If you wish to make further programming changes, make them using the information that follows the basic installation.

This manual is divided into two parts. Volume 1 (Sections 1-3) contains routine installation and service information. Volume 2 (Sections 4-8) contains troubleshooting charts, schematics, and other maintenance information. Please take time to read this page and review the *Table of Contents* in both volumes.

The *Troubleshooting* section includes schematics, component lists, and board layouts for all serviceable modules.

This service manual is divided into eight sections:

Volume 1

Section 1 **System Description** — Introduces you to the CD-100F, its features, and its major components, principles of operation, and step-by-step unpacking instructions. After unpacking the CD-100F, you should continue the installation process by following the title rack loading and programming instructions in *Section 2*.

Section 2 **Installation and Programming** — Continues the installation process with disc and title rack loading instructions, programming references, and step-by-step programming and pricing instructions. Whether you are familiar with previous Rowe phonographs or not, pay special attention to the pricing and programming.

Programming and pricing have been set at the factory, so you may not wish to change any of the CD-100F options. After you load the titles and the discs, the CD-100F is ready to play.

Section 3 **Routine Service** — Provides routine service instructions for collecting money, doing cash and play audits, resetting phonograph totals, and doing preventive maintenance.

Volume 2

Section 4 **CBA–2 Maintenance** — Contains all CBA–2 maintenance information, except for the CBA–2 replacement parts, which are in the *Parts Catalog*.

Section 5 **Troubleshooting** — Provides troubleshooting charts, error code and disc condition descriptions, troubleshooting procedures, block diagrams, schematics, circuit board layouts, and component lists. This section also contains the sequence of operation.

Section 6 **Mechanical Adjustments** — Details the mechanical checks and adjustment procedures for all of the CD-100F modules, except for the CBA–2 modules, which are described in Section 2.

Section 7 **Miscellaneous** — Contains specifications, fuse and circuit breaker locations, and a resistor color code chart.

Section 8 **The Parts Catalog** — Lists and illustrates all replaceable modules in the CD-100F. The Accessory Equipment List is at the end of this section.

This manual is intended for owners, route operators, and technicians. This manual provides all field and shop related service and maintenance material. Accessories and their installation and service are discussed in the corresponding accessory instructions (or manuals).

Table of Contents

SECTION 1 — INSTALLATION AND SYSTEM DESCRIPTION

Introduction **1-1**

Features **1-2**
General Features: 1-2
Service Features: 1-2

Unpacking Instructions **1-3**
Exterior 1-3
Doors 1-3
Shipping Bolts, Clips, And Tape 1-3
Title Page Assembly 1-4
Mechanism 1-5
CD Unpacking 1-5, 1-6

Visual Inspection **1-6**
Phonograph Leveling **1-6**
Handy Case **1-6**
Warranty Registration Card **1-6**

Major Components Of The CD-100F **1-6**
CD Selection System 1-7
Keyboard 1-7
Central Control Computer 1-7
Memorec 1-7
Autoplay 1-7

Principles Of Operation **1-8**
Audio System 1-8
CD Player 1-8
Stereo Amplifier 1-8
Preamp 1-8
Power Amplifier 1-8
Two-Wire Volume Control 1-9
Output Transformers 1-9
The Speaker System 1-9
CD Changer Mechanism 1-10
Magazine 1-10
Play Counter 1-10
Money Counter 1-10
Optical Switch 1-10
Cam Switch And Motor Assembly 1-11
Sprag Assembly 1-11
CD Modules 1-11
Mechanism Control Unit 1-12
Main Power Supply 1-12

SECTION 2 — INSTALLATION AND PROGRAMMING

Introduction **2-1**
Power On **2-1**
Loading CD'S And Titles **2-2**
Preparing Titles For The Title Holder 2-2
Loading The Title Holder 2-3

SECTION 2 — INSTALLATION & PROGRAMMING *(Continued)*

Procedures for Loading the Title Page Holder **2-4**
Procedures for Loading Discs **2-5**
Setting Title Page Limits For The First Time **2-7**
Pricing **2-7**
To Set Alternate Disc Prices 2-8
How CD-100F Pricing Works 2-8
Sample Price Changes 2-8
Checking The Pricing 2-10

Sound System Set Up **2-10**
Extension Speaker Operation 2-10
70-Volt Speakers 2-11
Low Impedance Speakers 2-11
Selecting Speaker Power **2-11**
General Instructions 2-11
Selection Procedures 2-11
4-Ohm Speakers 2-12
8-Ohm Speakers 2-13
70-Volt Speakers 2-13

Sound System **2-19**
Acoustical Compensation (Equalizer Tone Controls) 2-19
What This Graphic Equalizer Does 2-19
Equalizer Settings 2-19
Procedures for Adjustment 2-20
Soft And Highly Absorbent Rooms 2-20
Average Or Moderately-Absorbent Rooms 2-21
Hard And Non-Absorbent Rooms 2-21
Paging **2-22**

Changing The Number Of Credits Remaining **2-22**

Entering The Service Mode **2-23**
Viewing Menus 2-23
If You "Get Lost" In The Menus 2-23

Using CD-100F Commands **2-23**
Combining Menu And Command Modes 2-24
Service Mode Menu 2-26
Security Menu 2-26
Modem Menu 2-26
Audits Menu 2-26
Attract Mode Menu 2-26
Message Center Menu 2-26
Initialize Menu 2-26
Autoplay 2-27
Pricing Menu 2-27
Options Menu 2-27
More Options 1 Menu 2-28
More Options 2 Menu 2-28
Reports Menu (Optional) 2-28
Status Menu 2-28
Remote Menu (Optional) 2-28

SECTION 2 — INSTALLATION & PROGRAMMING *(Continued)*

How To Make Programming Changes **2-29**
Keyboard Controls 2-29
Security Levels 2-30
Factory Security Level 2-30

Programming Autoplay, Premiums, Priorities, And Lockouts **2-53**
Autoplay Programming Modes **2-54**
Lockout And Timed Lockout Modes **2-55**
Editing Autoplay, Premiums, Priorities, And Lockouts **2-55**

Timed Free Play And Timed Lockout Scheduling Tutorial **2-55**
What Multiple Lockout On/Off Times Do 2-55
What Multiple Freeplay On/Off Times Do 2-55

Rowe Message Center Programming **2-58**
Inserting Or Changing Messages 2-59
Setting The Daily Message Display Time(s) 2-63
Setting The Master On/Off Date 2-65

Enhanced Autoplay Tutorial **2-65**
Autoplay 2-65
Differences Between Standard And Enhanced Autoplay 2-65

Setting Up Enhanced Autoplay **2-66**
Using Reset +9 In The Category Menu 2-69
Disc Mode 2-69
Category Mode 2-69
Day Of The Week 2-70
Event 2-70
Time 2-70
Categories 2-70
Delay 2-70
Channel 1 And Channel 2 Volume (Optional) 2-70

Working Example of Enhanced Autoplay **2-71**

SECTION 3 — ROUTINE SERVICE

Introduction **3-1**
Doing An Audit **3-1**
Collecting Audit Figures **3-1**
Entering The Service Mode 3-1
Cash Audits 3-2
Play Audits 3-2
Non-Resettable Audits 3-2
Most Popular Disc 3-2
Least Popular Disc 3-2
Most Popular Selection 3-3
Clearing The Audit Values 3-3
  Clear Cash 3-3
  Clear Plays 3-3
  Clear Selection Popularity 3-3

SECTION 3 — ROUTINE SERVICE *(Continued)*

Changing CD's And Titles **3-4**
Preparing Titles For The Title Holder 3-4
Changing Discs 3-4

Complete Audit Command List **3-6**
Collecting Money **3-10**

Preventive Maintenance **3-10**
CD Player Laser Lens 3-11

Coin Mech (Optional) **3-12**

FREQUENTLY USED FIGURES AND TABLES

Volume 1

Extension Speaker Worksheet *(Table 2-1)* 2-12

Amplifier Overload Check *(Table 2-2)* 2-15

Speaker Connections *(Figure 2-7)* 2-16, 2-17

Volume & Cancel Control Diagrams *(Figure 2-8)* 2-18

Service Mode Map *(Figure 2-10)* 2-25

Keyboard Controls *(Table 2-4)* 2-29

Menu And Command Descriptions *(Table 2-5)* 2-31

Command Index *(Table 2-6)* 2-48

Audit Commands *(Table 3-1)* 3-6

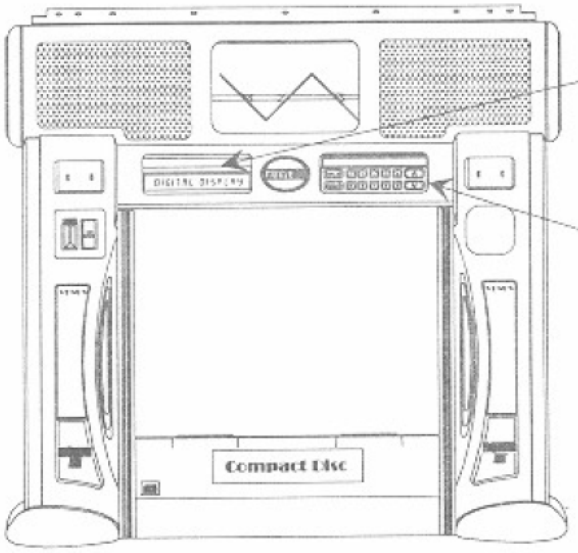

Digital Display
Shows The SELECTION PLAYING, SELECTION BEING MADE, SELECTIONS REMAINING, THE MESSAGE CENTER, And SERVICE MODE DISPLAY

Selector Keyboard
Enters Numbers And Contains The POPULAR And RESET Keys

Bill Acceptor
Accepts Bills

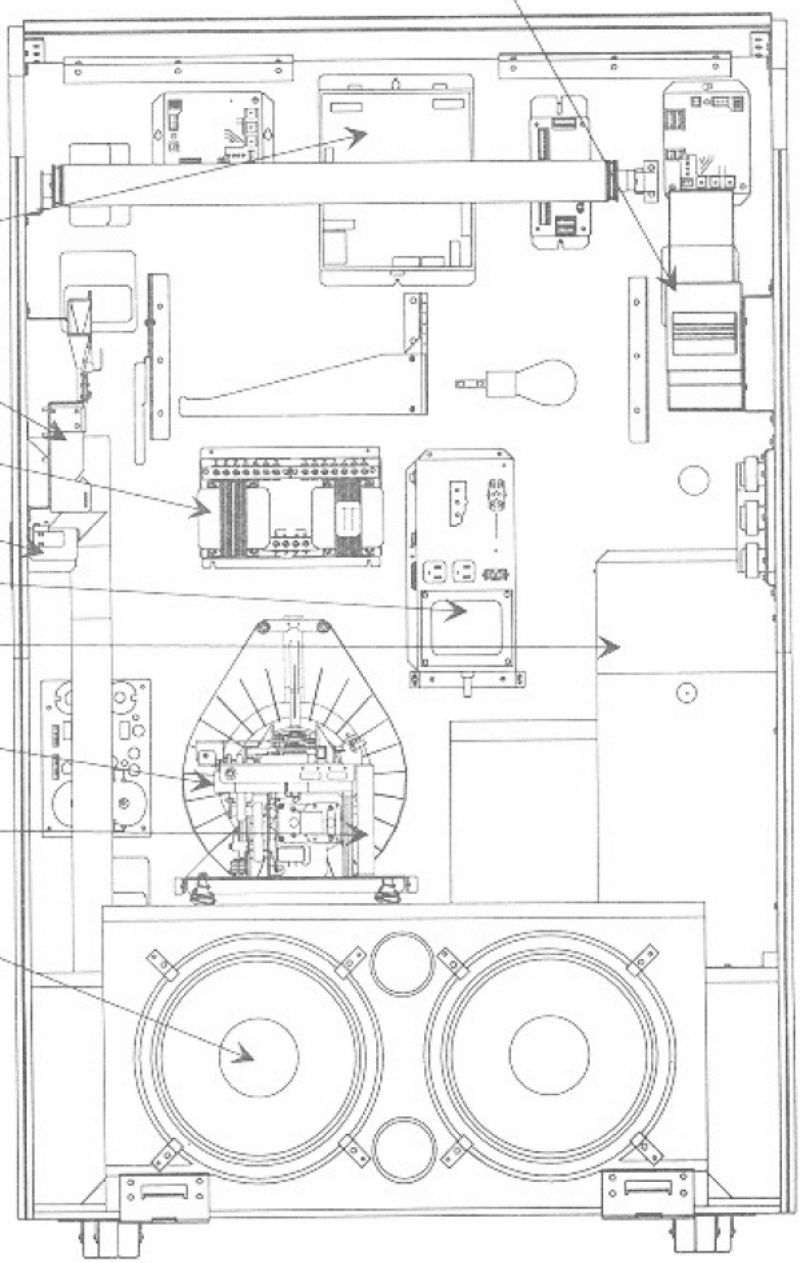

Central Control Computer
Controls All Functions Of The Phonograph

Coin Acceptor
Accepts Coins

Output Transformers
Provide Connections To The Speakers

Service Switch
Selects The Mode Of Operation

Main Power Supply

Amplifier Compartment
Contains Amplifier

CD Mechanism
Selects And Plays Discs

Mechanism Control Unit
Controls The Disc Mechanism

Speaker System
Woofers And High/Midrange (Not Shown) Speakers

Figure 1-1. CD-100F Major Components

Section 1: Installation & System Description

INTRODUCTION

The CD-100F plays compact discs exclusively. The reliable CD mechanism holds up to 100 compact discs. These discs are played through a 250 watt stereo amplifier.

Before you begin to unpack and use this phonograph, *please pay special attention to the following:*

READ THIS CAREFULLY BEFORE PLACING YOUR NEW PHONOGRAPH INTO SERVICE:

- **Mechanism** - **Completely unpack the mechanism before plugging in the AC power line cord.**
- **Title Pages** - **If you wish to turn the title pages manually, use the handwheel on the back of the title page assembly (*See Figure 1-2*).**
- **CD Player** - **Read the CD player unpacking procedure and the static caution that accompanies the procedure.**
- **Title Page Assembly** - **Before you close the door, make sure that you have returned the title page assembly to its normal position.**

FEATURES

The major CD-100F features are:

General Features:

- Sturdy construction and reliable design
- Conveniently located customer, operator, and service controls
- New attention-getting animation display and revolving color tubes
- Message Center Display
- Electrically operated title pages
- Entire albums can be selected
- A 250 watt amplifier with dual 7-band graphic equalizer
- AVC keeps CD volume constant
- 100 disc capacity
- As selected (FIFO) playback or random playback
- 500 bill capacity
- Attract mode to merchandise music or advertising with the use of the message center
- Many phonograph programming options
- Total of 50 selections may be "locked out"
- Total of 30 selections may be "priorities"
- Total of 30 selections may be "premium." Premium can be 2, 3, 4, etc., standard credits.
- Real-time clock allows scheduling of Autoplay, Lockouts, Free Play, and Messages by time and day
- Accessories available to play background music and/or autoplay at different volume levels
- Timed alternate pricing

Service Features:

- All servicing can be done from the front of the phonograph
- Modular component construction for easy removal and replacement
- Alpha/Numeric display gives you more comprehensive readouts
- Complete cash and play audit information
- Three levels of security access provide limited access to route operators if desired
- Disc condition logging feature to help find skipping selections and unplayable discs
- Machine errors and disc conditions are logged by time and date
- Choice of 3 CD initialization procedures
- Optional RS-232 interface allows you to print audit data, Memorec data, pricing options, disc conditions, and error history

UNPACKING INSTRUCTIONS

This section contains information for unpacking the phonograph and installing it on location. The phonograph is shipped with all major components in place. Save all tie-down hardware in case the CD-100F must be moved to another location.

Exterior

1. Remove the shipping carton with care: Do not use shipping hooks or sharp tools that could damage the phonograph cabinet.

2. Remove the plastic bag that covers the phonograph.

3. Carefully inspect the interior and exterior of the phonograph to ensure that no damage occurred during transit.

   If damage is detected, the carrier who delivered the phonograph should be contacted immediately to examine it. Regardless of the exterior condition of the shipping cartons, the carrier should be called and notified of damage. Do not destroy packing material or boxes until the carrier's agent has examined them. Damage claims are your responsibility. Do not return shipping damaged merchandise until after your claim has been established. Once your claim has been established, merchandise may be returned to your Rowe distributor for repair. The invoice amount for repair charges can then be collected from the carrier.

Doors

1. Locate the red bag in the top hand hold on the back of the cabinet. Remove the door key from the bag and unlock the top door. Turn the key to the right and press down on the door as you turn the key.

CAUTION:

Step back as you release the top door to avoid hitting yourself in the chin with it.

2. Open the front door by pressing down on both front door latches.

Shipping Bolts, Clips, and Tape

TITLE PAGE ASSEMBLY

See Next Page

WARNING:

Do not attempt to turn the CD title pages by hand. Use the handwheel on the back of the title page assembly *(See Figure 1-2).*

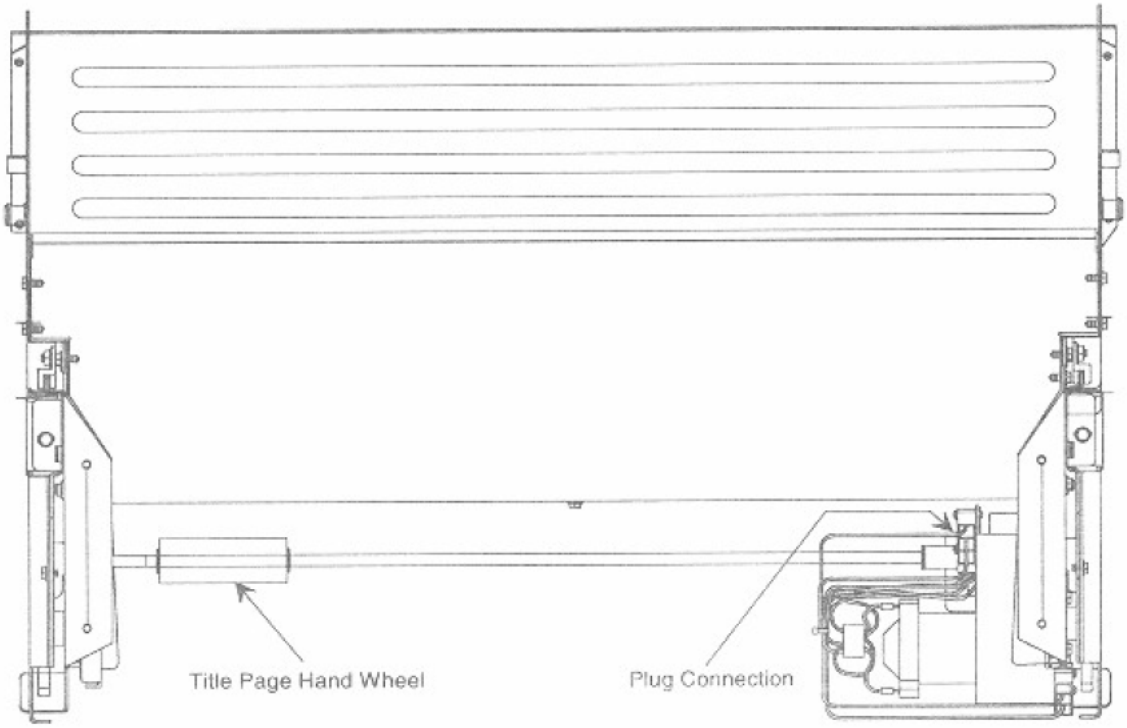

Title Page Assembly in the "UP" Position

Figure 1-2. Title Page Hand Wheel

Title Page Assembly

1. Remove the shipping screws from both ends of the lower title page assembly support bracket.
2. Remove the shipping band from the front of the title page assembly.
3. Check to see if the title page assembly is plugged in (*See Figure 1-2 above).*

Save all shipping hardware that you remove in the following six steps:

Mechanism

CD UNPACKING

1. Remove the CD changer mechanism shipping bolt from the back of the phonograph cabinet *(See Figure 1-3).*

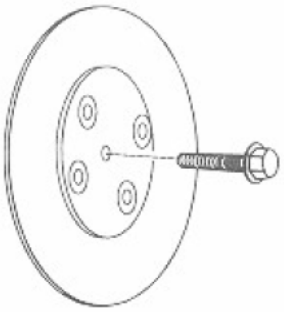

Figure 1-3. Shipping Bolt Removal

2. Remove the shipping tape from the front ends of the mechanism tie-down levers on the side of the mechanism frame *(See Figure 1-4).*

3. Push the end of the lever down slightly, rotate the lever away from the frame until the latch tab clears the hole in the frame, rotate the lever up until the mechanism is free, and remove the levers.

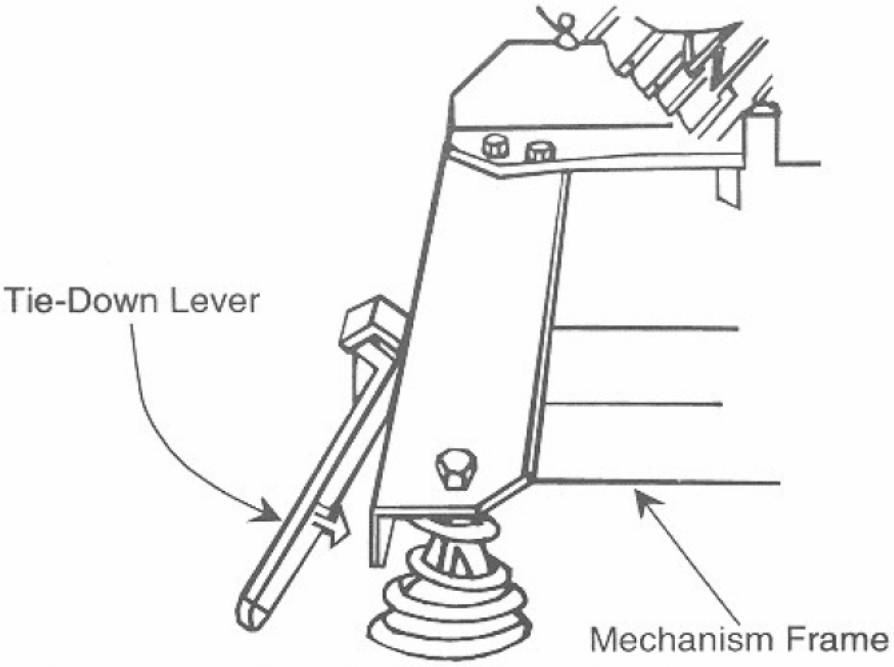

Figure 1-4. CD Changer Tie-Down Levers

Do not proceed with unpacking until you read and understand the following caution:

CAUTION:

The CD mechanism is sensitive to static discharges. The photo diodes and the laser are more sensitive to discharges than MOS IC's. Careless handling may immediately destroy components within the player or cause undetectable damage that will lead to failure after several weeks or even months of use. Before you touch the player, discharge your hands and tools by touching a grounded metal part of the phonograph, such as the amplifier or power supply chassis. If you need to remove the CD player for servicing, place the CD player into the anti-static bag (shipped with the phonograph for this purpose) immediately after you remove it from the phonograph.

4. Remove the rubber band on the hold-down plate.
5. Remove the rubber band, wire hook, and warning tag that hold the sprag lever out of the sprag wheel.
6. Remove all tape from the magazine belt and magazine pulley.
7. Check to see that the title page assembly is plugged in.

VISUAL INSPECTION

Check to be sure that all electrical plugs are completely seated into their receptacles.

PHONOGRAPH LEVELING

To insure proper operation, level the phonograph cabinet from left-to-right and front-to-back by inserting spacers under the caster wheels.

HANDY CASE

Locate the Handy Case in a blue plastic envelope. The Handy Case contains a variety of items, including the phonograph service manual and parts catalog, spare parts, and fuses. Keep the Handy Case inside the phonograph so the service manual and parts will be readily available when needed.

WARRANTY REGISTRATION CARD

A postage-paid Warranty Registration Card is included with the phonograph. This card should be filled out and returned to Rowe.

MAJOR COMPONENTS OF THE CD-100F

Figure 1-1 shows the major components of the CD-100F Phonograph. Take a minute to familiarize yourself with these components.

Table 8-1 (Volume 2, Section 8) lists the accessories that you may have in addition to the standard phonograph.

CD Selection System

CD selections are made by entering the four-digit selection number on the selector keyboard *(See Figure 1-5).*

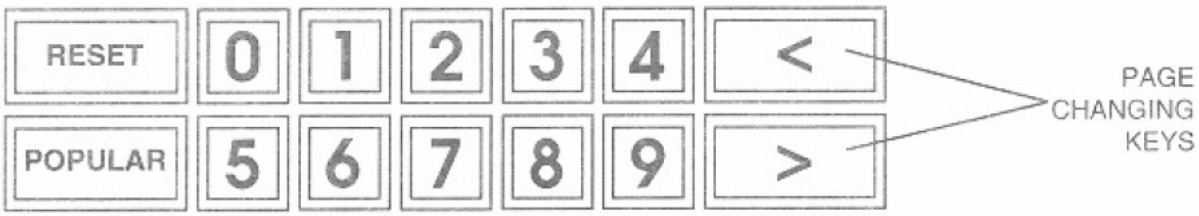

Figure 1-5. Keyboard

Keyboard

The keyboard consists of 14 keys: Ten digit keys and four special keys. The two PAGE CHANGE keys move the title pages electrically. The RESET button allows the customer to re-enter his selection if he has changed his mind or made a mistake. The POPULAR key selects the selection that customers have selected the greatest number of times. Pressing the POPULAR key a second time will select the second most popular selection. Pressing the POPULAR key a third time will select the third most popular selection and so on. The POPULAR key selection feature can be disabled if desired - see *Command 6994* in *Table 2-4.*

NOTE:

On a new phonograph, a phonograph that has had its CCC replaced, or a phonograph that has had the POPULARITY **cleared, the** POPULAR **key will not select any disc number until at least one normal selection has been made.**

Central Control Computer

The central control computer (CCC) keeps track of all of the phonograph's activities and determines what the various components are to do next. The CCC regulates the following functions:

- Calculating credit and making selections
- Keeping track of selections not yet played
- Calculating the most popular selection list
- Remembering the operator's programmed values
- Stores and displays the message center information

Memorec

Memorec is the part of the CCC that remembers the :

- Number of times each selection was played
- The total amount of money deposited in the phonograph

Autoplay

When no selections have been made for a predetermined time, the Autoplay feature will play selections from a programmed list or make random selections. The choice of which selections are chosen, the selection sequence, and the selection interval can be programmed by the owner or service person.

PRINCIPLES OF OPERATION

Audio System

The audio system consists of the electronic components that transform the recorded sound into music. The major components of the audio system are the:

- CD Player
- Stereo Amplifier
- Output Transformers
- Speaker System

CD PLAYER

This sub-assembly translates digital pulses from the CD into a left and right channel audio signal.

STEREO AMPLIFIER

The amplifier assembly *(See Figure 1-6)* contains two major sections, the preamplifier (preamp) and the power amplifier (amp).

Preamp

The preamp increases the signal from the CD player, corrects for varying recording levels (automatic volume control or AVC), allows the volume to be adjusted manually, and modifies the CD tone (tone changes are made through a 7-band graphic equalizer).

Power Amplifier

The power amplifier converts the preamp signal to a signal that can be used by the phonograph speakers.

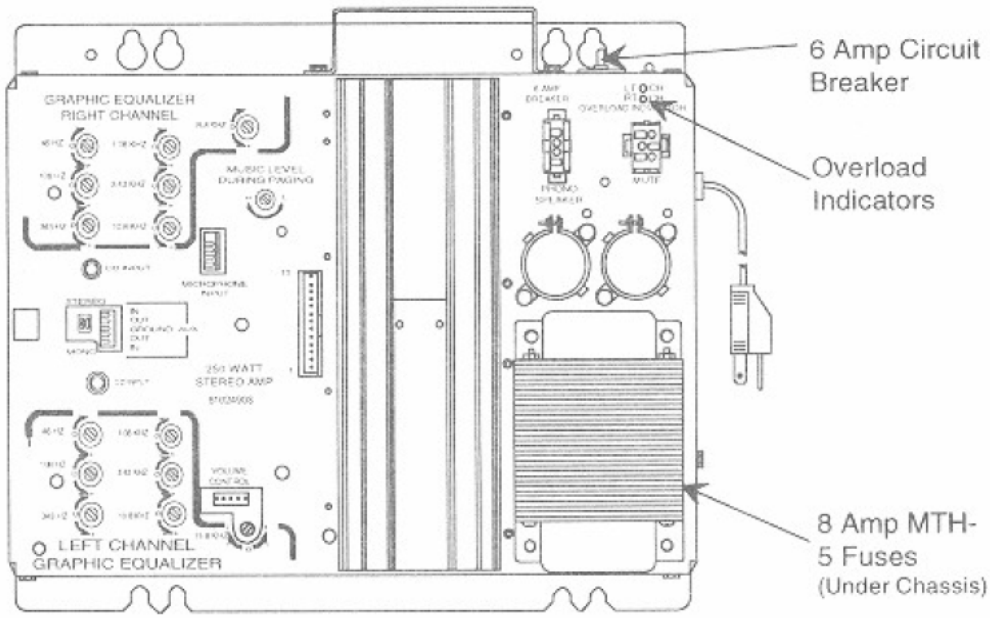

Figure 1-6. 250 Watt Stereo Amplifier Components

TWO-WIRE VOLUME CONTROL

A Rowe innovation, the two-wire volume control simplifies complex installations and reduces cost. A special preamplifier design permits volume control wiring using any unshielded two-wire cable.

OUTPUT TRANSFORMERS

The output transformers *(Figure 1-7)* "step up" the power amplifier's output voltage for 70-volt extension speakers. The output transformers also provide connections (taps) for selecting different power levels for the speakers.

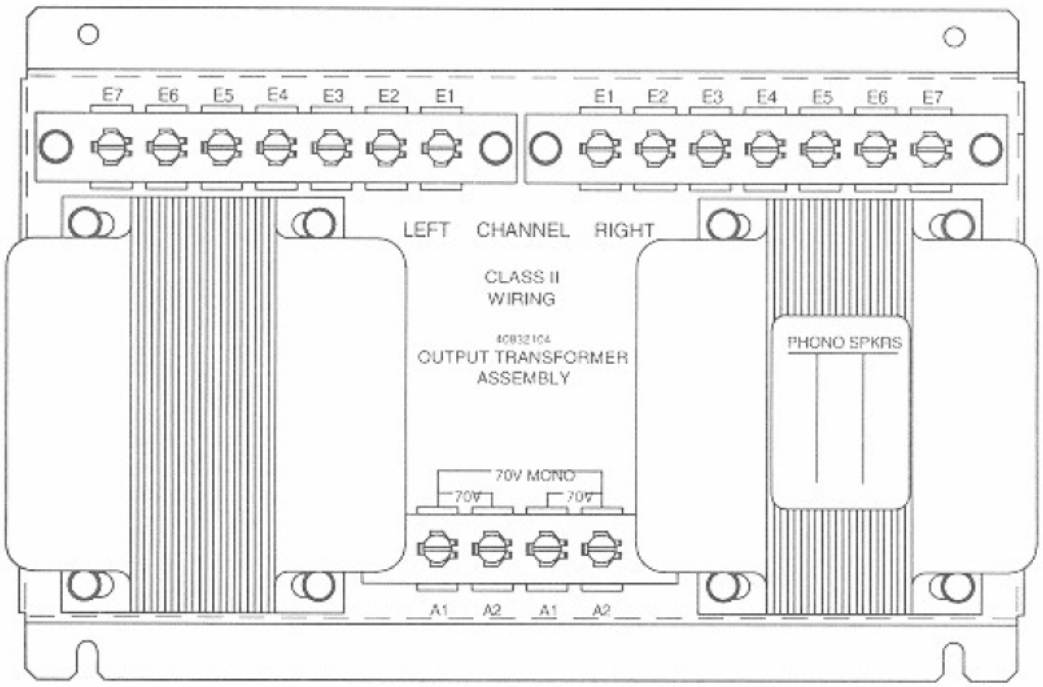

Figure 1-7. Output Transformer Package Components

THE SPEAKER SYSTEM

The speaker system consists of two specially designed speaker channels. Each channel consists of one 8-inch woofer, one mid/high range speaker, a tweeter, and a crossover network.

CD Changer Mechanism

The CD changer mechanism, also referred to as the "mechanism" or "mech", is located in the center of the cabinet's interior. It is the primary mechanical component of the phonograph. The mechanism holds 100 CD's and plays selections on command from the selection system *(Refer to Figure 1-8 for the location of each of the major mechanism components).*

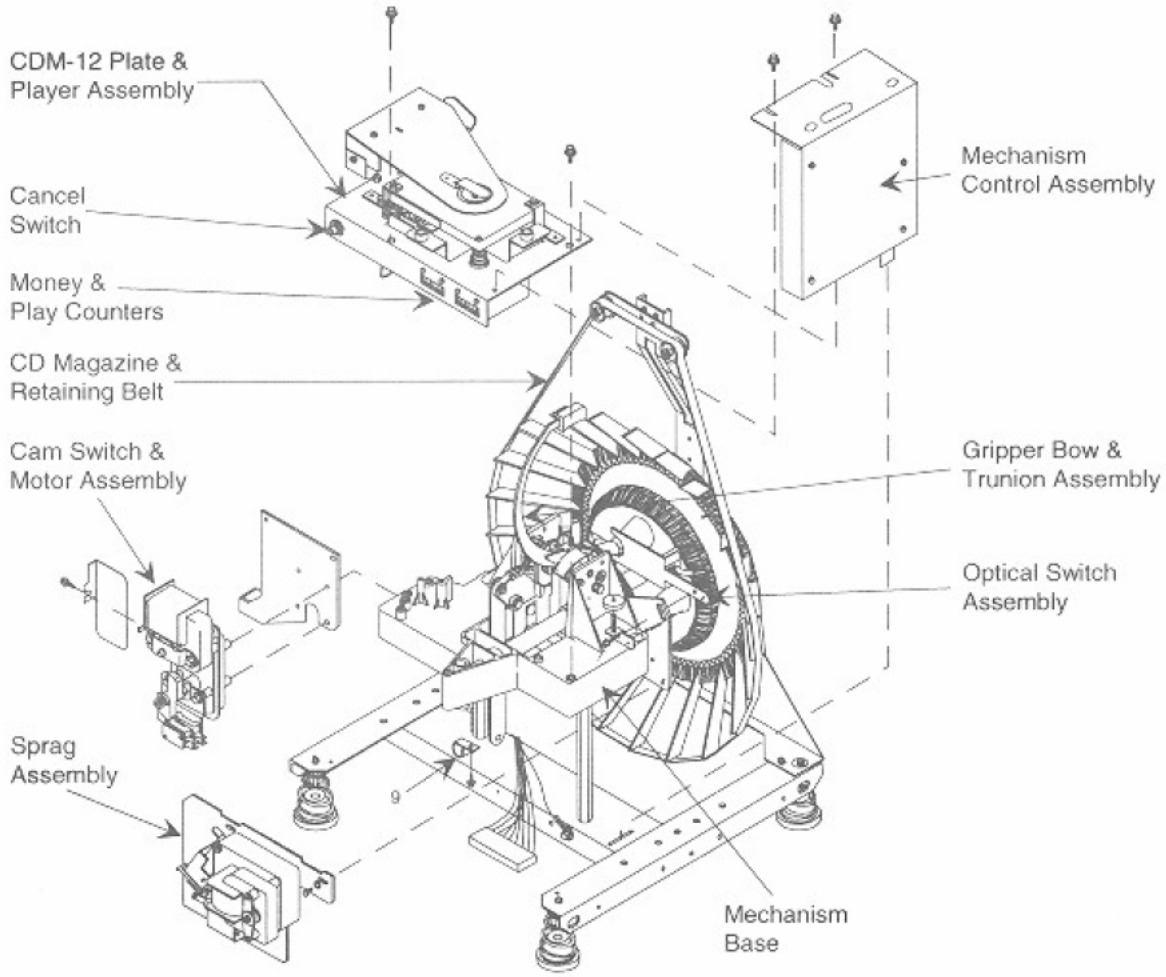

Figure 1-8. CD Changer Mechanism

MAGAZINE

The CD magazine stores 100 CD's.

PLAY COUNTER

The play counter accumulates the total number of plays on the mechanism.

MONEY COUNTER

The money counter registers the total money deposited in the phonograph.

OPTICAL SWITCH

The optical switch senses the CD magazine position so that the CCC can determine which CD is in gripping position.

CAM SWITCH AND MOTOR ASSEMBLY

The cam switch and motor assembly *(See Figure 1-9)* consists of the transfer motor, cam, and two cam switches.

SPRAG ASSEMBLY

This assembly locks the CD magazine in position.

CD MODULES

The CD player plays the CD's after they are positioned on the turntable by the disk transfer arm.

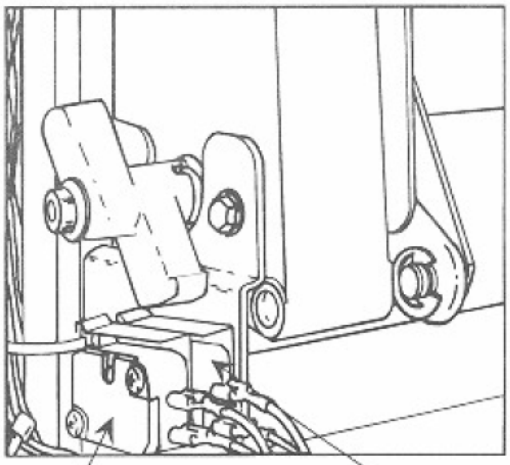

Figure 1-9. Cam Switch & Motor Assembly

Mechanism Control Unit

This solid state switching unit controls the scan and transfer.

Main Power Supply

The main power supply*(See Figure 1-10)*, located inside the amplifier compartment, distributes unregulated +28 VDC, 28 VAC, and regulated +8 VDC to the phonograph. The 120 VAC line voltage to the main power supply is controlled by the power switch on the bottom of the phonograph cabinet.

WARNING:

The 120 VAC AMPLIFIER OUTLET on the main power supply does not shut off by turning the POWER ON/OFF **switch on the bottom of the phonograph** OFF.

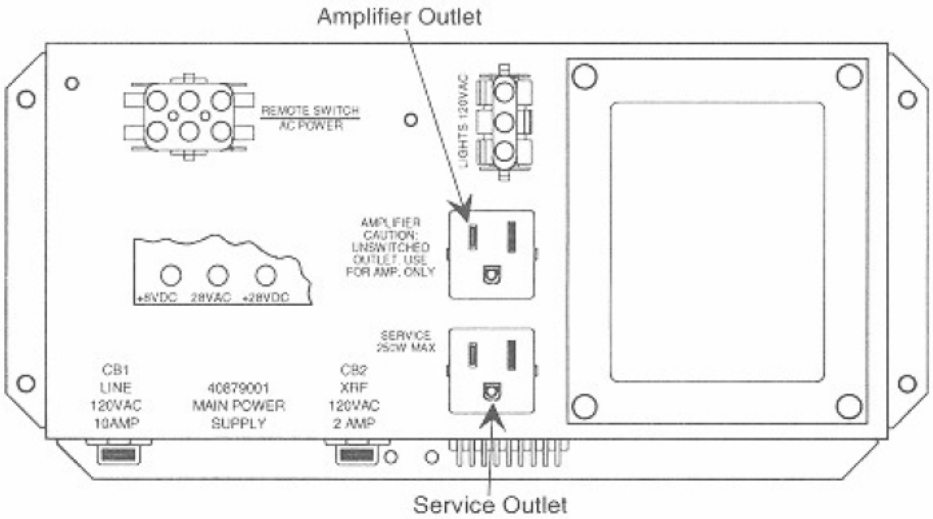

Figure 1-10. Main Power Supply.

Section 2: Installation & Programming

INTRODUCTION

This section describes the installation and programming process. This information begins with a summary of what happens when the phonograph is powered up and continues with detailed instructions on how to load the titles and discs, modify the pricing, and set up the sound system. The last part of this section describes how to make other programming changes (you can keep a record of the factory settings and your changes by using the *Operator's Set-Up Sheet* at the end of this section if you wish).

POWER ON

The following steps are a summary of the detailed *Power On Process* that is described in *Section 5* of *Volume 2*.

Step 1. Power turned on, main power supply +8 VDC, 28 VDC, and 28 VAC LED's light, and all modules and components receive power.

Step 2. The Voltage and Power LED's light on the CCC, mechanism control, CBA-2, and digital display. The Board Error LED's on the CCC and mechanism control flash three times. The CBA-2 Status LED flashes once. The CCC Rowelink Command and mechanism control Rowelink TX LED's continuously flicker.

Step 3. Phonograph is ready to operate.

LOADING CD'S AND TITLES

CAUTION:

Do not attempt to turn the CD title pages by hand. If the title page assembly is unplugged or not operating electronically, use the handwheel on the back of the assembly *(See Figure 1-2).*

The procedure for loading CD's and titles into an empty phonograph is different from the procedure to change CD's and titles. Please make sure you are following the procedure that describes your situation.

Preparing Titles for the Title Holder

If your titles have not been shipped with the discs or pre-printed, you will need to prepare the title strips yourself.

Loading the Title Holder

All of the titles on the title strip sheet can be used for either right or left-hand titles. If your title strips have not been pre-printed, you may want to type the titles before you tear the individual title strips off the title strip sheet.

Refer to the sample in *Figure 2-1* for an illustration of where to tear the title strips off the title strip sheets.

These procedures describe how to load one CD album and one title strip. Repeat this procedure for each CD that is being loaded.

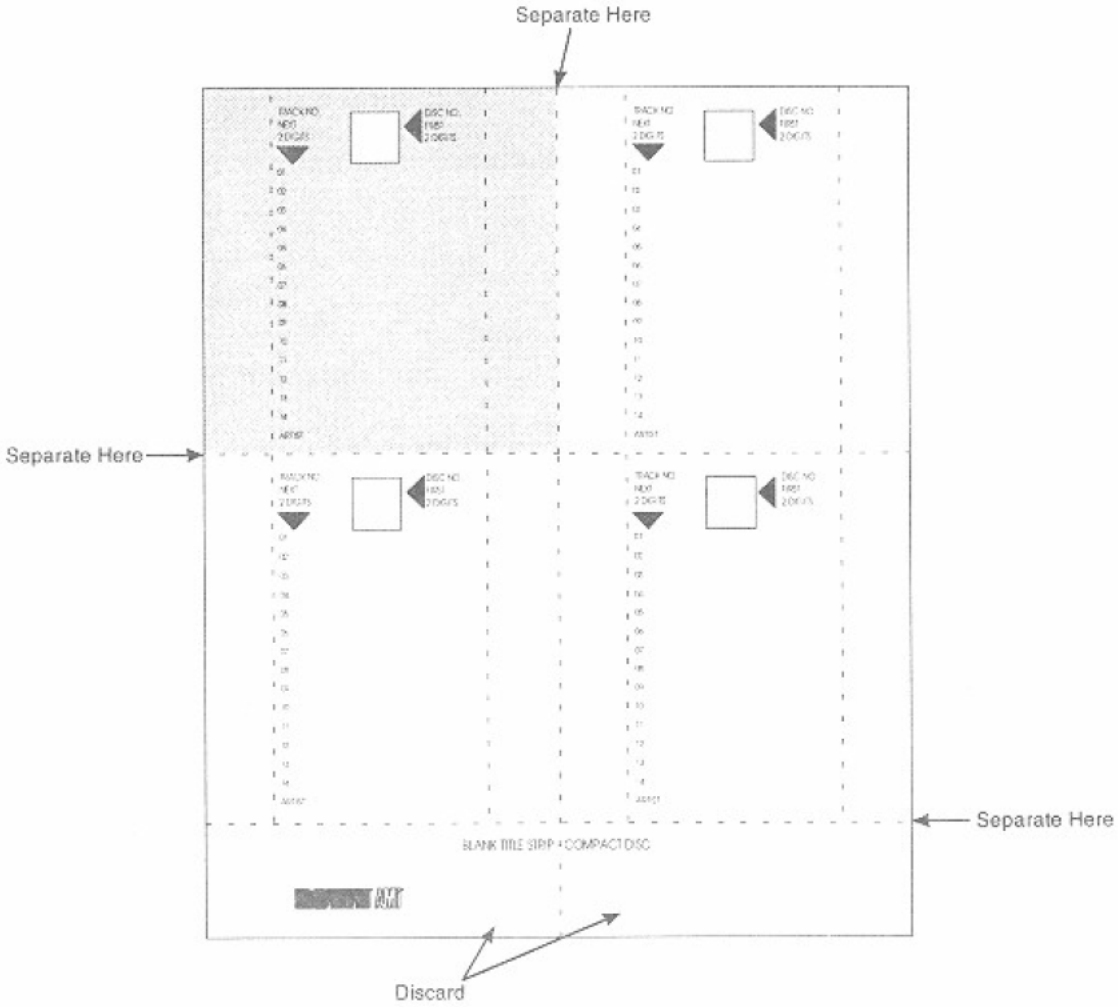

Figure 2-1. Blank Title Sheet

PROCEDURES FOR LOADING THE TITLE PAGE HOLDER

1. Tear each title strip from the title sheet so the perforated column appears on the side of the title strip (the shaded portion of the title strip in *Figure 2-1* represents a title strip that has been removed from the title sheet).

2. Fold the title strip along the perforated line on both sides of the title strip *(See Figure 2-2).*

3. Locate the CD album booklet that matches the title strip you have just made. If the CD booklet is more than two sheets thick, remove the inner sheets so that the booklet is no thicker than two title strips.

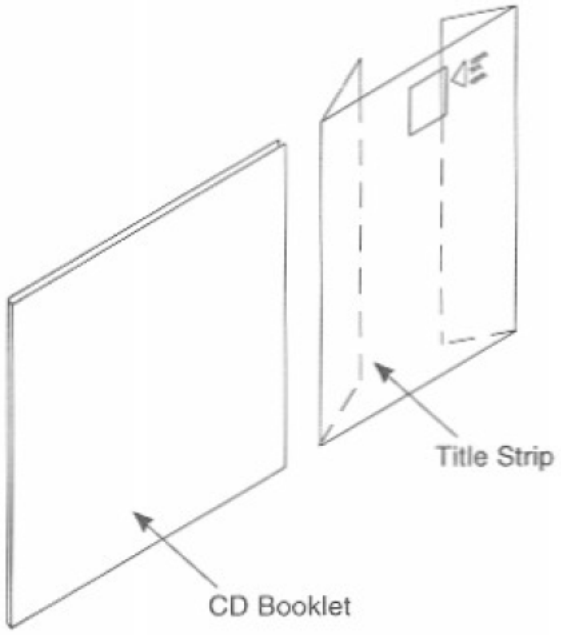

Figure 2-2. Folding the Title Strip

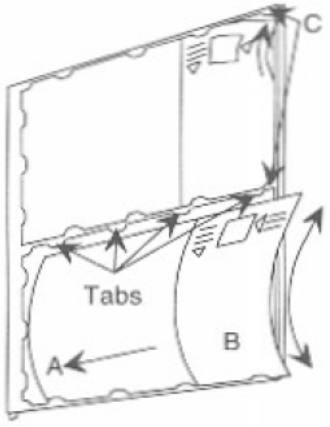

Figure 2-3. Loading the Title Page Holder (2 of 6 Pages Shown)

4. Insert the CD booklet under the top and bottom tabs of the title page . Slide the CD booklet over until the it is trapped by the molded stops on the title page holder *(See Figure 2-3, Ref. A).*

5. Insert the folded title strip under the top and bottom tabs of the title holder. Slide the title strip until the disc number shows in the opening of the title strip and the title strip is locked in place by the molded stops *(See Figure 2-3, Ref. B).*

6. All of the tabs surrounding the CD booklet and title strip should be holding them in place. If you missed a tab, carefully tuck the loose paper under the tab as shown in *Figure 2-3, Ref. C.*

7. Repeat Steps 4 and 5 until all titles are installed. Use the PAGE switch *(Figure 2-4)* to change title pages. Insert filler title strips to fill out any unused space left on a page. Insert these in the same way that you installed the fill-in title strips.

PROCEDURES FOR LOADING DISCS

Load discs as follows:

1. Unlock and open the top door.

2. Move the SERVICE switch to the SERVICE position (Refer to *Figure 2-4*).

3. Press the CANCEL/SCAN button (located on the CD changer mechanism) to move the disc space to the left or right of the transfer arm.

4. Slide the CD into the slot with the label tot the right.

   Note that disc positions in the molded CD magazine are identified by numbers at every other slot, with even numbered slots labeled on one half of the magazine, and odd numbered slots labeled on the other half.

   For example, on the even numbered half of the magazine, slots 00, 04, and 08 are labeled, and the slots in between - 02 and 06 - are not, as illustrated in *Figure 2-5*.

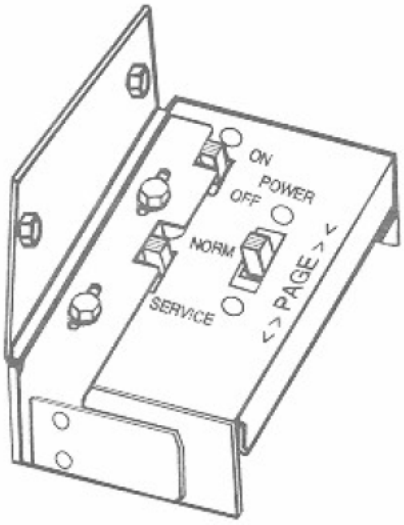

Figure 2-4. Service Switch

> **NOTE:**
>
> **When loading the magazine, make sure the disc rests in the same numbered slot in both the front and rear of the magazine.**

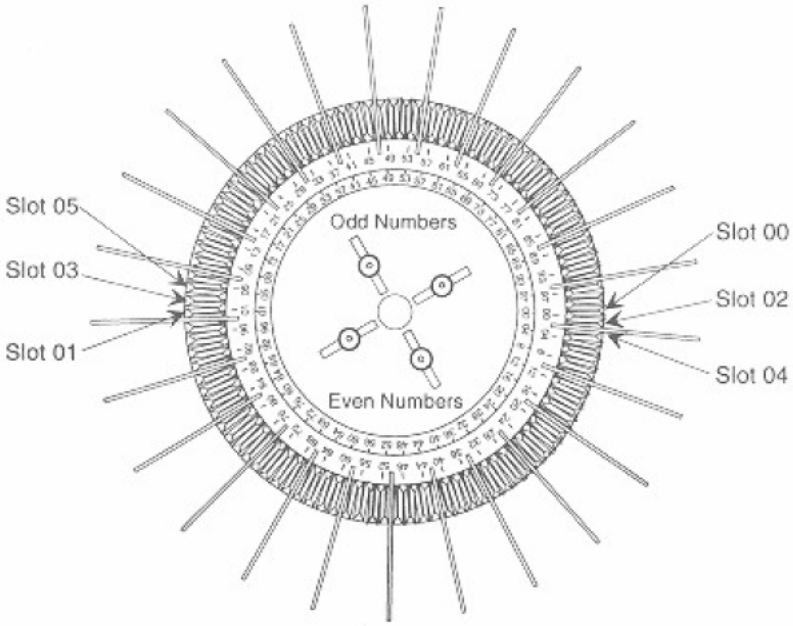

Figure 2-5. Loading the Molded CD Magazine

NOTE:

When loading discs, be sure to keep the magazine disc load approximately balanced. If the magazine is partially loaded with all discs on one side, the sprag wheel may lock and the magazine will not turn.

5. Check title strips and disc sequence to ensure that the titles and discs correspond.

6. After all titles and discs are in the proper places, perform a disc initialization. Initialization is performed in the following manner:

NOTE:

You may wish to release the two catches that hold the display in place and lower the keyboard/display.

A. Make sure that the phonograph is in the SERVICE mode and *SERVICE MODE* or _ _ ERRORS EXIST _ _ appears on the display.

B. Type 3 to select the INITIALIZE sub menu and type 0. FULL INITIALIZE will appear on the display. Press POPULAR to start the initialization and close the top door or place the phonograph in NORMAL mode.

The initialization process will start and continue for approximately 30 minutes. During this time, the phonograph can be used *(see the notes that follow).*

7. When initialization is finished, check that all discs have initialized. To do this, reenter the SERVICE mode and:

A. Type 3 to select the INITIALIZE sub menu and then type 4 to view the number of discs that have been initialized. If this number does not match the number of discs that should have been initialized, do the following step. If the number matches the number of discs that you expected to be initialized, initialization is complete.

B. If the number of discs initialized does not match the number of discs that you expected to be initialized, hold RESET and press 0 twice. This will place you in the DISC _ _ TRACK _ _ menu and display the first disc and its number of selections. Hold RESET and press 3 to see the next disc and its number of selections. Continue through the list by holding RESET and pressing 3 until you find a disc with the number of tracks equal to 0 (zero). Continue through the disc list noting all discs with track numbers equal to 0.

C. Check that each disc on your list (ones with track numbers equal to 0) is in the proper slot, with the label facing to the right. If it is not, move it to the proper slot. If the disc is in the proper slot, it may be defective. Repair or replace it and do the individual disc initialization *(See Changing Discs in Section 3).*

NOTE:

1. **The initialization process will stop whenever the phonograph is in the SERVICE mode, and will resume when the phonograph is returned to the NORMAL mode if the phonograph is in Standby (i.e., no selections are in memory).**

2. **During full initialization, all disc limits are initially set to 99. As each disc is scanned, the proper limits for that disc are stored in memory allowing only valid selections to be made.**

SETTING TITLE PAGE LIMITS FOR THE FIRST TIME

This procedure gives you specific instructions on how to set the page limits only.

The phonograph is shipped with all pages accessible. Pages 1 through 9 can be "flipped" and viewed. When you install discs, you may not need all 9 pages. If you do not need all 9 pages, you should restrict page movement to just those pages that have titles. Set the title page limits as follows:

1. Unlock and open the top door.

2. Move the SERVICE switch to the SERVICE position *(Refer to Figure 2-4).*

3. Make sure that *SERVICE MODE* or _ _ ERRORS EXIST _ _ appears on the display.

4. Type 2 to select the ATTRACT sub menu then type 4 to select the PAGE LIMIT function and you will see the display for entering the first page number to use and the last number to use. Press POPULAR, which sets the first page number to 1. Notice that the blinking number has moved to the right. Type the last page number to be used and press POPULAR. Flip the keyboard display back up, making sure that both catches are engaged.

PRICING

The prices charged for CD selections may be changed as needed. When shipped from the factory the prices are set as follows:

Price of Selections

3 Selections for $1.00
7 Selections for $2.00
18 Selections for $5.00

Figure 2-6A. Alternate Price Card

NOTE:

If you are using the factory pricing, skip to *Sound System Set Up.*

To Set Alternate Disc Prices:

The Handy case has an Alternate Price Card *(See Figure 2-6A)* that may be substituted for the Standard Price Card. The Handy Case also contains a Price Sheet with printed prices *(See Figure 2-6B)* which can be peeled off and place at the appropriate location on the Alternate Price Card.

Using the phonograph keyboard, the pricing structure of the phonograph may be adjusted to match the prices on the Alternate Price Card. The maximum amount that can be charged for a selection is $99.95. The maximum number of selections that can be entered is 999. The POPULAR key must be pressed to record the data entered on the display.

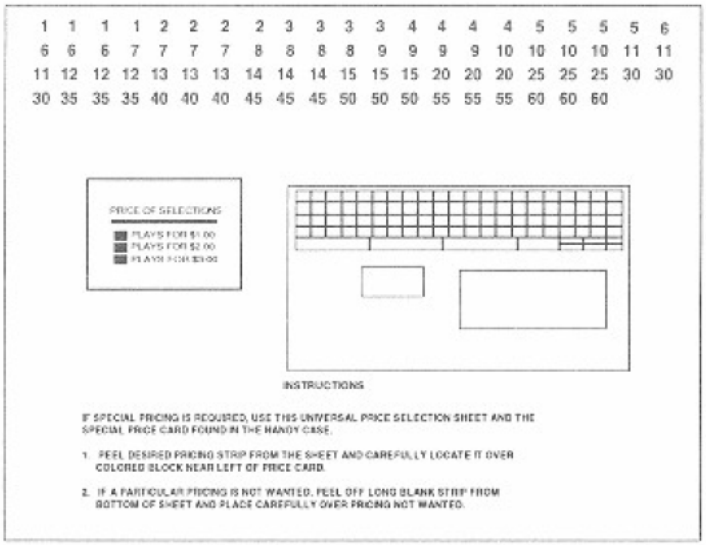

Figure 2-6B. Universal Price Sheet

If you wish to use alternate pricing, follow the steps to complete the Alternate Price Card and enter the prices. Also, for your records, fill in the *Pricing* section of the *Rowe CD Phono Operator's Set Up Sheet* at the end of this section. Before making the actual pricing changes, go through the sample pricing that follows.

How CD-100F Pricing Works

Pricing is determined by the numbers that are stored in the PRICE LEVELS and PLAYS @ LEVEL menus. The LEVEL 1 PRICE corresponds to the LEVEL 1 PLAYS in the following way: Enough money must be deposited to reach the first (#1) price level before any selections can be made. Once the amount of money matches this price, the number of selections in the LEVEL 1 PLAYS menu can be made.

To make pricing changes, set the LEVEL 1 PRICE and LEVEL 1 PLAYS to match the lowest price and number of plays on the Alternate Price Card. Then enter the remaining PRICE LEVELS and PLAYS @ LEVEL until you have set all five levels (if you do not have prices for all levels, enter 0's in all of the remaining PRICE and PLAYS positions.

SAMPLE PRICE CHANGES

1. Determine the prices that are to be charged for disc selections and place the price decals from the Price Sheet into the slots on the Alternate Price Card. The following is an example of a completed Alternate Price Card:

Price of Selections

4 for $1.00
9 for $2.00
25 for $5.00

2. Enter the SERVICE mode by setting the SERVICE switch to the SERVICE position.

NOTE:

This example will not give the correct dollar amounts for U.S. money unless PRICING OPTION 3 **is set to 5 (this is the factory setting for U.S. phonographs and you should not have to change it).**

Use the prices in the example that follows to help yourself better understand the phonograph's pricing.

Example CD Prices

4 for $1.00
9 for $2.00
25 for $5.00

If You Have a Problem in a Menu

1. **Press and hold down** RESET **and then press 0 until you come to the top of the current menu.***
2. **If this menu name doesn't help, press and hold** RESET **and then press** POPULAR. **This will move you to the top of the previews menu. In most cases, this will return you to the main menu** (*SERVICE MODE*).
3. **If you still cannot determine where you are, press and hold** RESET **and then press** POPULAR **again. This will return you to the main menu** (*SERVICE MODE*).

3. Select the PRICE LEVELS menu, Option 1, from the main menu by pressing 511.

4. Now enter the LEVEL 1 PRICE, which is the lowest disc selection price (enter 0100 and press POPULAR).

5. Move down to the next price (LEVEL 2 PRICE) by pressing and holding RESET and then pressing 1. Enter the next highest price (enter 0200 and press POPULAR).

6. Move down to the next price (LEVEL 3 PRICE) by pressing and holding RESET and then pressing 1. Enter the next highest price (enter 0500 and press POPULAR).

7. Move down to the next price (LEVEL 4 PRICE) by pressing and holding RESET and then pressing 1. Enter 0000 (because only three prices are being used) and press POPULAR.

8. Move down to the last price (LEVEL 5 PRICE) by pressing and holding RESET and then pressing 1. Enter 0000 and press POPULAR.

9. Press and hold RESET while pressing POPULAR 2 times. This will place you in the price menu. Select the PLAYS @ LEVEL menu, Option 1, from the main menu by pressing 21.

10. Enter the number of disc selections to be given for the lowest amount on the disc portion of the example price card into LEVEL 1 PLAYS (enter 004 and press POPULAR).

11. Move down to the next play option (LEVEL 2 PLAYS) by pressing and holding RESET and then pressing 1 (enter 009 and press POPULAR).

12. Move down to the next play option (LEVEL 3 PLAYS) by pressing and holding RESET and then pressing 1 (enter 025 and press POPULAR).

13. Move down to the next play option (LEVEL 4 PLAYS) by pressing and holding RESET and then pressing 1 (enter 000 and press POPULAR).

14. Move down to the next play option (LEVEL 5 PLAYS) by pressing and holding RESET and then pressing 1 (enter 000 and press POPULAR).

CHECKING THE PRICING

Add bills (and coins, if a coin acceptor is installed) to reach the first (or next) price level. Check for proper credit at each price level.

SOUND SYSTEM SET UP

If you are not using extension speakers, skip to *Sound System Acoustical Compensation (Tone Controls).*

Extension Speaker Operation

To avoid a poor sounding phonograph, care must be taken when adding extension speakers. Three requirements must be met:

1. Speakers must be wired so that the power consumed by the phonograph speakers and the extension speakers does not exceed the amplifier power rating. After wiring the speakers, perform an Amplifier Overload Check (*Table 2-2B*).

2. Extension speakers should produce the desired sound level relative to the sound level of the speakers on the phonograph.

3. All speakers must be connected with the correct polarity (See NOTE below).

NOTE:

The left channel output phase is reversed with respect to the right channel. This reversal is necessary to extend monaural sound in a stereo phonograph system. Because of this reversal, speaker connections to the left channel must be reversed when compared to the right channel, except for 70-volt speaker connections. The 70-volt phasing is reversed inside the output transformers.

Several charts have been included to assist you with connection the extension speakers. *Figure 2-7* shows the entire sound system.

70-Volt Speakers

To avoid prohibitive cable losses on long speaker lines, use 70-volt speakers.

The power level in the 70-volt speakers is set at each speaker.

LOW IMPEDANCE SPEAKERS

Low impedance speakers (8 or 4 ohm) can be used when the connecting cable is less than 100 feet.

4-ohm speakers

No more than one 4-ohm speaker should be connected to a speaker line. If several 4-ohm speakers are to be used, each speaker should have its own line.

8-ohm speakers

The loss in 100 feet of 18 gauge zipcord feeding on 8-ohm speaker is 15%. The loss for two 8-ohm speakers is 30%.

Do not connect a low impedance speaker to a speaker tap that exceeds the speaker's power rating.

NOTE:

In any speaker installation, the total speaker load (the sum of all power ratings of all speakers) must not exceed 250 watts.

SELECTING SPEAKER POWER

General Instructions

This section will lead you through the power and speaker selection process. This process consists of three major steps and several smaller steps. The major steps are:

1. Identifying the extension speakers and computing the extension speaker power.
2. Making the external speaker connections.
3. Determining and selecting the phonograph power (phonograph speakers are 8 ohm).

Selection Procedures

1. Use a pencil (you may want to revise your figures) to fill in the work sheet on the following pages:

Table 2-1. Extension Speaker Worksheet
Sheet 1

Extension speakers are available in these general categories: General purpose speakers (4 and 8 ohm speakers) and 70-volt speakers.

Use this worksheet to help you calculate the amount of power consumed by the extension speakers.

Use this worksheet as a guide to help you select which power tap to use for each type of external speaker that you are using.

4-OHM SPEAKERS

Place the quantity of stereo speakers in the blank under QTY and multiply the quantity times the power consumption (show stereo speakers as 2 speakers). Place your results in the blank under TOTAL.

4-Ohm Stereo Speakers

	QTY	Total	Connections
Speakers for the 1 watt taps:	____at 1 watt each =	____watts	(E1 to E2)
Speakers for the 1.75 watt taps:	____at 1.75 watt each =	____watts	(E4 to E5)
Speakers for the 4 watt taps:	____at 4 watt each =	____watts	(E1 to E3)
Speakers for the 9 watt taps:	____at 9 watt each =	____watts	(E2 to E4)
Speakers for the 16 watt taps:	____at 16 watt each =	____watts	(E1 to E4)
Speakers for the 28 watt taps:	____at 28 watt each =	____watts	(E1 to E5)
Speakers for the 64 watt taps:	____at 64 watt each =	____watts	(E1 to E6)
Speakers for the 113 watt taps:	____at 113 watt each =	____watts	(E1 to E7)

4-Ohm Mono Speakers

Speakers for the 4 watt taps:	____at 4 watt each =	____watts	(E2 to E2)
Speakers for the 16 watt taps:	____at 16 watt each =	____watts	(E3 to E3)
Speakers for the 64 watt taps:	____at 64 watt each =	____watts	(E4 to E4)
Speakers for the 113 watt taps:	____at 113 watt each =	____watts	(E5 to E5)

Table 2-1. Extension Speaker Worksheet
Sheet 2

8-OHM SPEAKERS

Place the quantity of stereo speakers in the blank under QTY and multiply the quantity times the power consumption (show stereo speakers as 2 speakers). Place your results in the blank under TOTAL.

8-Ohm Stereo Speakers

	QTY	Total	Connections
Speakers for the .5 watt taps:	____at .5 watt each =	____watts	(E1 to E2)
Speakers for the .9 watt taps:	____at .9 watt each =	____watts	(E4 to E5)
Speakers for the 2 watt taps:	____at 2 watt each =	____watts	(E1 to E3)
Speakers for the 4.5 watt taps:	____at 4.5 watt each =	____watts	(E2 to E4)
Speakers for the 8 watt taps:	____at 8 watt each =	____watts	(E1 to E4)
Speakers for the 14 watt taps:	____at 14 watt each =	____watts	(E1 to E5)
Speakers for the 24 watt taps:	____at 24 watt each =	____watts	(E2 to E6)
Speakers for the 32 watt taps:	____at 32 watt each =	____watts	(E1 to E6)
Speakers for the 57 watt taps:	____at 57 watt each =	____watts	(E1 to E7)

8-Ohm Mono Speakers

Speakers for the 2 watt taps:	____at 2 watt each =	____watts	(E2 to E2)
Speakers for the 8 watt taps:	____at 8 watt each =	____watts	(E3 to E3)
Speakers for the 32 watt taps:	____at 32 watt each =	____watts	(E4 to E4)
Speakers for the 57 watt taps:	____at 57 watt each =	____watts	(E5 to E5)
Speakers for the 128 watt taps:	____at 128 watt each =	____watts	(E6 to E6)

70-VOLT SPEAKERS

70-volt speakers have a power tap on them or on their associated transformer. Add together all of the 70-volt speaker tap settings and enter that value:

____watts (A1 to A2)

Table 2-1. Extension Speaker Worksheet
Sheet 3

Combine consumptions of all speakers:

	Stereo	Mono
4-Ohm:	_____	_____
8-Ohm	_____	_____
70-Volt	_____	_____

	Stereo	**Mono**	**Grand Total**
Totals:	_____ +	_____	= _____

Subtract the Grand Total from 250 and write the result in the blank at the end of this line: **Power Available for the Phonograph**_____

NOTE:

In any speaker installation, the total RMS speaker load (the sum of all power ratings of all speakers) must no exceed 250 watts. It is strongly recommended that "Efficient" extension speakers are used.

The Grand Total is the amount of power that the phonograph will need to supply to the extension speakers. This amount must not exceed 250 watts. If it is more than 250 watts, you must reduce the power used by the extension speakers to reduce the total power consumed; then recalculate the total power consumed.

When you subtract the Grand Total from 250, you will get the "Power Available for the Phonograph" figure. Be sure to write this value down in the blank because you will not be using it until you have wired all of the extension speakers.

2. When you have reached a satisfactory combination of speakers and speaker power consumption, use the CONNECTION column (the connections are in parentheses) as a wiring guide to make the actual connection. Refer to *Figure 1-1* for the location of speaker terminal strips and refer to *Figure 2-7* for typical examples of speaker connections.

NOTE:

1. **The amplifier may be connected to a load of 250 watts before distortion will begin to increase beyond specification.**
2. **Refer to *Figure 2-8* for remote volume control connection diagrams.**

3. The phonograph wires to change are the Violet (left channel) and the Pink (right channel) on the output transformer assembly (*See Table 2-2A*).

   Use *Table 2-2A* as a guide to select the power used by the phonograph. This power should roughly match the amount indicated in "Power Available for the Phonograph" on the previous page.

Table 2-2A. Phonograph Speaker Power

Select the speaker taps that will use up most of the "Available Speaker Power"

You may select more or less phonograph power to suit your phonograph volume preference.

Phono Power[1]	Phono Speaker Connections
1	Violet connects to Left E2, Pink connects to Right E2
4	Violet connects to Left E3, Pink connects to Right E3
16	Violet connects to Left E4, Pink connects to Right E4
28	Violet connects to Left E5, Pink connects to Right E5
64	Violet connects to Left E6, Pink connects to Right E6
113	Violet connects to Left E7, Pink connects to Right E7

Do not move the Black wire; it should stay on either the Left or Right E1 terminal.

Table 2-2B. Amplifier Overload Check

Check that the amplifier is not overloaded by performing the following five steps:

1. Make sure that the extension speakers are connected to the proper speaker taps.
2. On the amplifier, set all seven RIGHT CHANNEL and all seven LEFT CHANNEL graphic equalizer controls fully counterclockwise.
3. Set the volume control fully clockwise (maximum volume) and make a selection.
4. While the music is playing, if the OVERLOAD INDICATOR(S) stay OFF or occasionally flicker in a random manner, the load is acceptable. If the OVERLOAD INDICATOR(S) are always lit or flicker continuously, the amplifier is overloaded and you must perform Step 5.
5. Do this step only if the OVERLOAD INDICATOR(S) came on as described in Step 4. Find the source of the overload (shorted speaker wires, too many speakers connected, or speaker power taps too high). After you fix the short, disconnect a few speakers, or lower the speaker power tap selection, then repeat Step 4.

[1] This value is the total for both channels. The power consumption for each channel is one-half of this value.

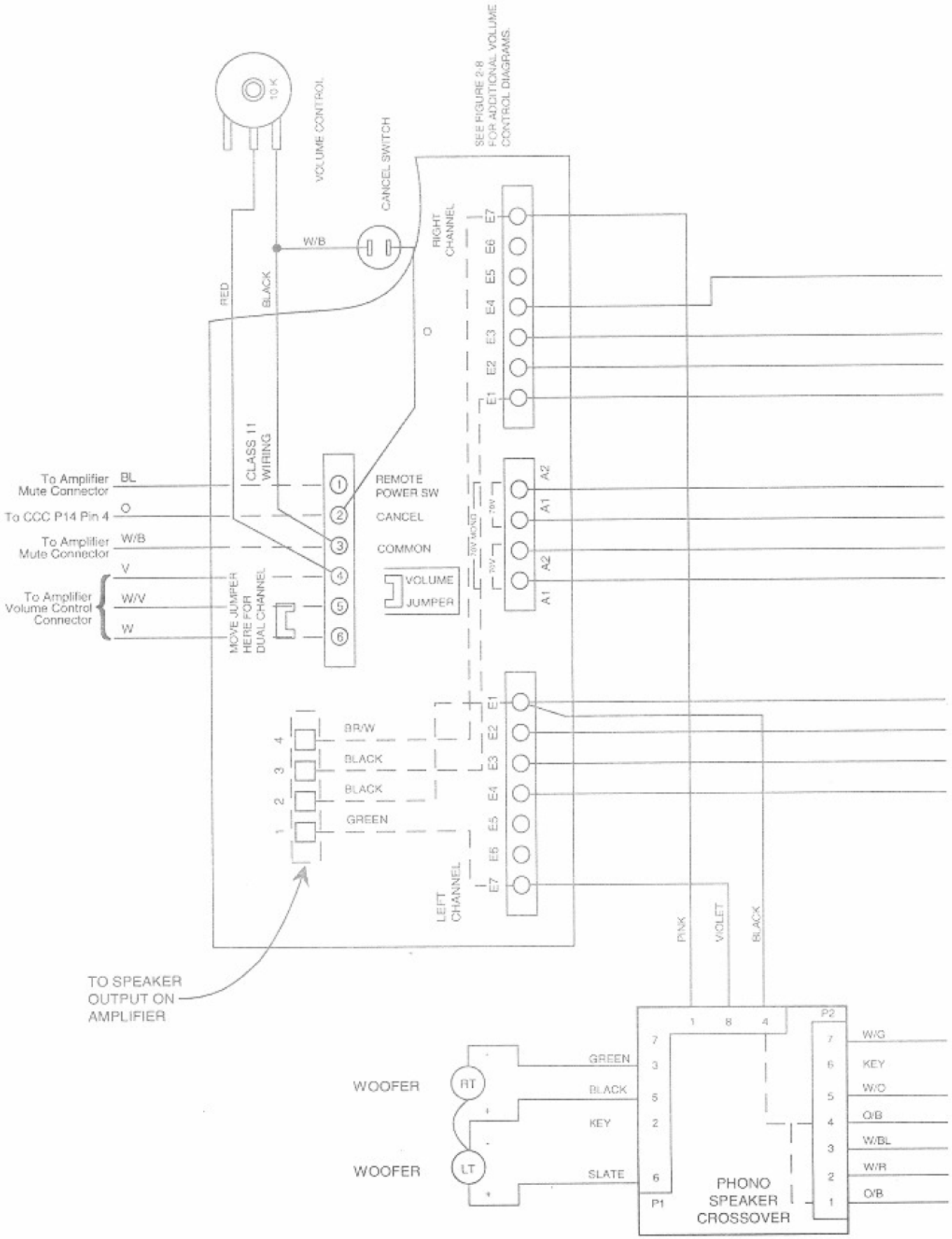
10 K
VOLUME CONTROL
CANCEL SWITCH
SEE FIGURE 2-8 FOR ADDITIONAL VOLUME CONTROL DIAGRAMS.
W/B
RED
BLACK
RIGHT CHANNEL
E7
E6
E5
E4
E3
E2
E1
O
CLASS II WIRING
To Amplifier Mute Connector
BL
To CCC P14 Pin 4
O
To Amplifier Mute Connector
W/B
To Amplifier Volume Control Connector
V
W/V
W
MOVE JUMPER HERE FOR DUAL CHANNEL
REMOTE POWER SW
CANCEL
COMMON
VOLUME JUMPER
70V
70V MONO
70V
A2
A1
A2
A1
BR/W
BLACK
BLACK
GREEN
LEFT CHANNEL
TO SPEAKER OUTPUT ON AMPLIFIER
PINK
VIOLET
BLACK
WOOFER
RT
WOOFER
LT
GREEN
BLACK
KEY
SLATE
P1
PHONO SPEAKER CROSSOVER
P2
W/G
KEY
W/O
O/B
W/BL
W/R
O/B

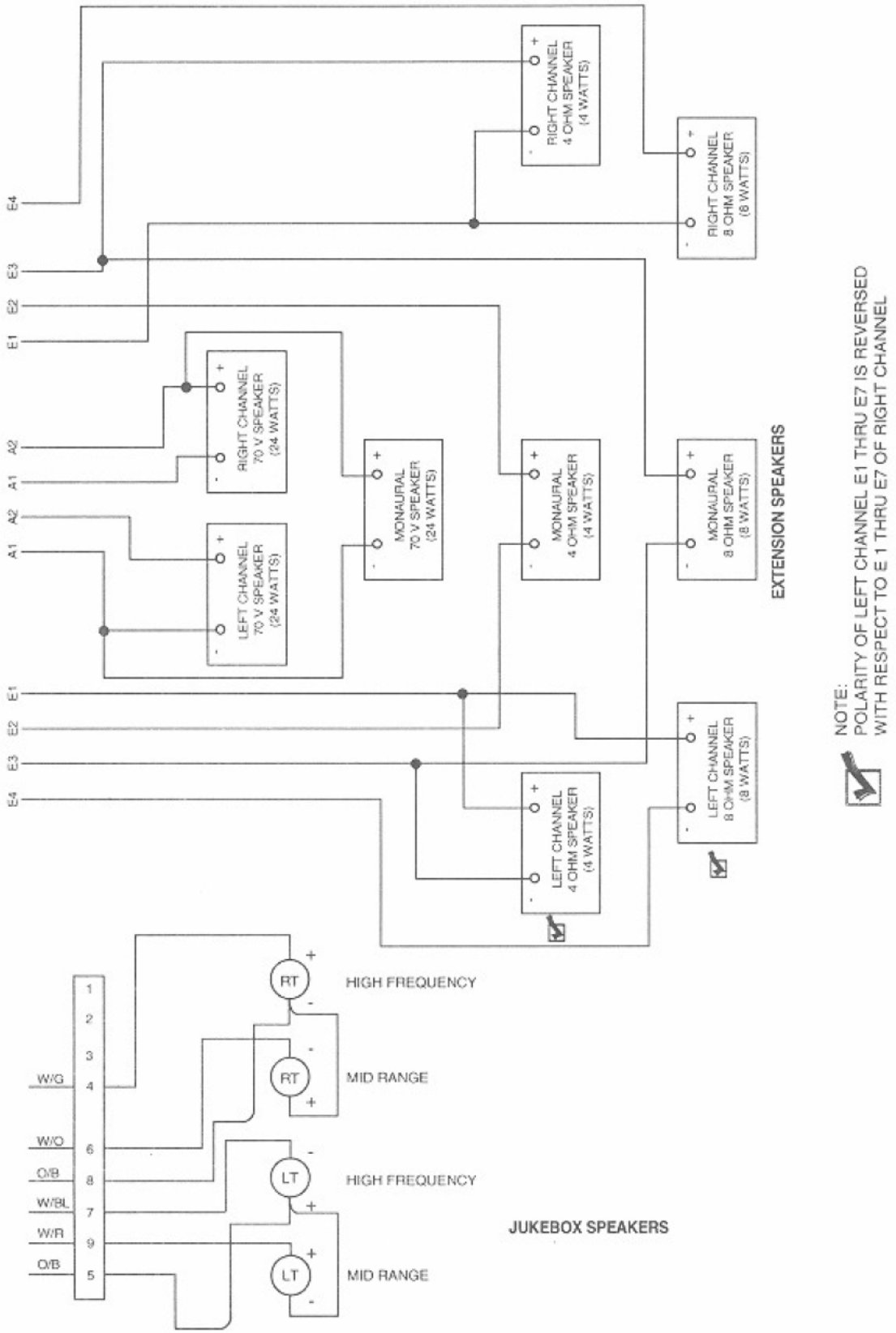

Note: See Section 4 for the crossover schematic and components list.

Figure 2-7. Speaker Connections

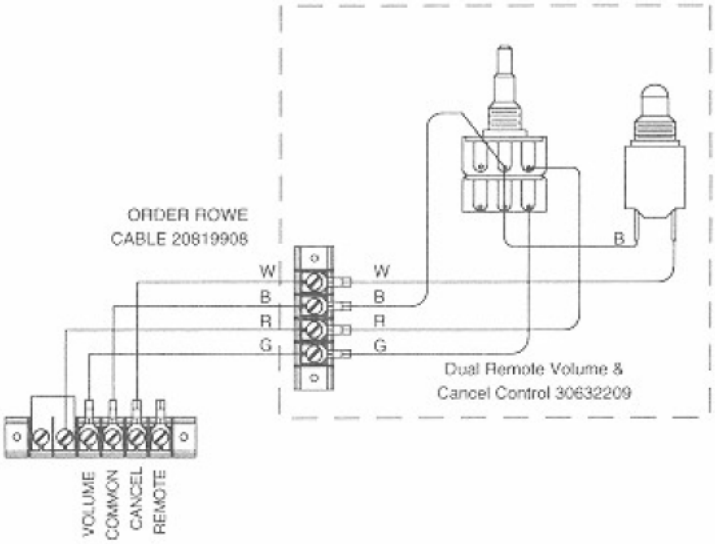

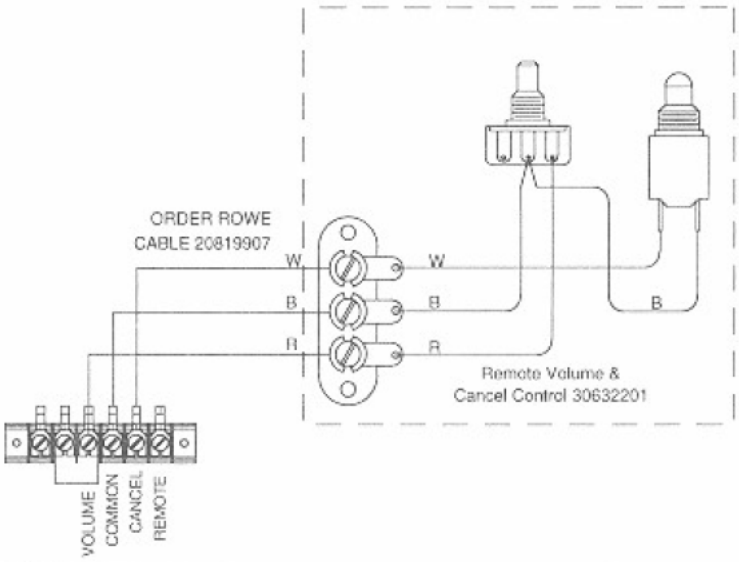

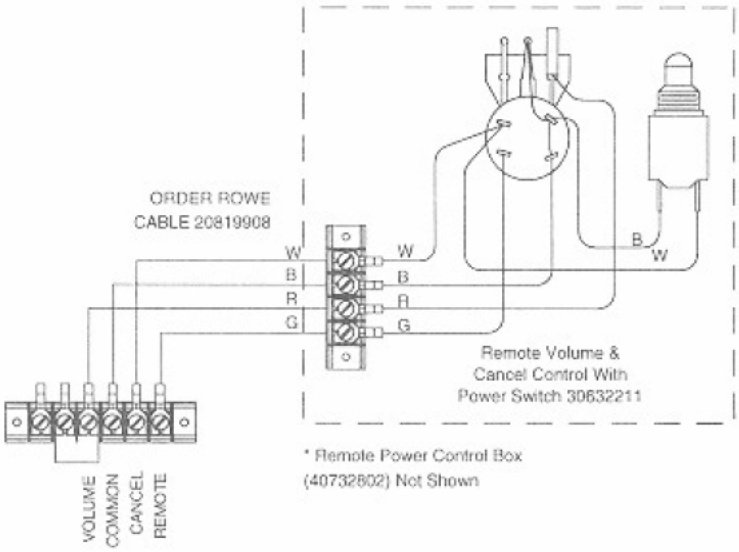

Figure 2-8. Remote Volume Control Diagrams

SOUND SYSTEM

Acoustical Compensation (Equalizer Tone Controls)

The preamplifier contains seven tone controls on each channel to compensate for room acoustics in various locations. These controls are on the amplifier chassis. The sound level at which the phonograph will be operated and the room furnishings determine the settings of these controls.

A room with carpet and drapery is a soft or highly absorbent location. A crowded room is also highly absorbent. These location require greater emphasis of high frequencies.

A room with paneled walls and a bare or tiled floor is a hard, nonabsorbent location, which requires greater low frequency emphasis.

Regardless of the room acoustics, the high and low frequency characteristics of your speakers can influence the equalizer settings as much or more than ti room acoustics.

What This Graphic Equalizer Does

This graphic equalizer controls the tone for seven specific tone ranges. The frequency for each range is printed next to each equalizer control.

IMPORTANT:

- **Before setting these controls, do *Steps 1-5* in *Table 2-2B* to ensure that the amplifier is not overloaded.**
- **Each of these controls can limit the maximum volume for its range by as much as 85%.**
- **This means that if a control is set to minimum, that the maximum power available for that range is only about 40 watts.**
- **If all of the graphic equalizer controls are set to minimum, then the phonograph will produce no more than approximately 40 watts of its 250 watt capacity.**

Equalizer Settings

These equalizers work equally well for stereo and mono sound and may be used with single and dual volume controls.

The settings that follow will give a good sound for a room with the matching acoustics (highly absorbent, moderately absorbent, nonabsorbent). Set the right and left channel equalizer controls to the positions that match the room describe (or most closely described) in the three illustrations that follow this paragraph. These settings may be just right, or they may not sound 100% right to you. If the sound is not satisfactory, make small changes in the settings until the sound is just the way you want it.

If the Room or Speaker System Requires a Trade-Off

The equalizer limits the volume of all of the audio frequencies. Therefore, to achieve the best sound for a specific room or set of speakers, you may find that most of the graphic equalizer controls need to be turned down. In this situation, the overall phonograph volume may not be adequate. If you find that you have this situation, increase each graphic equalizer control slightly until the phonograph produces the required volume.

Procedures for Adjustment

Select one of the Room Acoustics that most closely matches the acoustics of your room and follow the instructions for that room type. If your room is an average or moderately absorbent room, or you like the sound of the phonograph, you can use the factory settings just the way they are.

Soft and Highly Absorbent Rooms

Rooms with carpet and drapery are considered to be "soft and highly absorbent."

1. Turn all seven right channel and seven left channel graphic equalizer controls fully counterclockwise.

2. Turn the 46 and the 108 Hz controls to the position midway between the maximum and the minimum position as shown to the right. Leave all of the other controls turned all the way counterclockwise.

3. The controls on the equalizer should now be set as shown to the right.

4. Play a selection and turn the controls slightly (no more than 1/8 of a turn at a time) until the sound is acceptable. Be sure that the phonograph volume is adequate. If the volume is not adequate, turn each control up (counterclockwise) slightly until the volume is satisfactory.

Remember: The maximum volume setting is obtained when all controls are turned full counterclockwise.

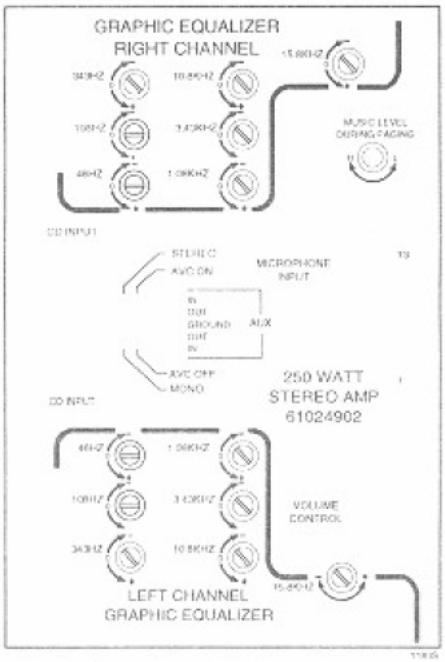

Figure 2-9A. "Soft" Rooms

Average or Moderately Absorbent Rooms

These are the factory settings.

1. Turn all seven right channel and seven left channel graphic equalizer controls fully counterclockwise.
2. The graphic equalizer's controls should now be set as shown to the right.
3. Play a selection and turn the controls slightly (no more than 1/8 of a turn at a time) until the sound is acceptable. Be sure that the phonograph volume is adequate. If the volume is not adequate, you will need to turn each control up (counterclockwise) slightly until the volume is satisfactory.

Remember: The maximum volume setting is obtained when all controls are turned full counterclockwise.

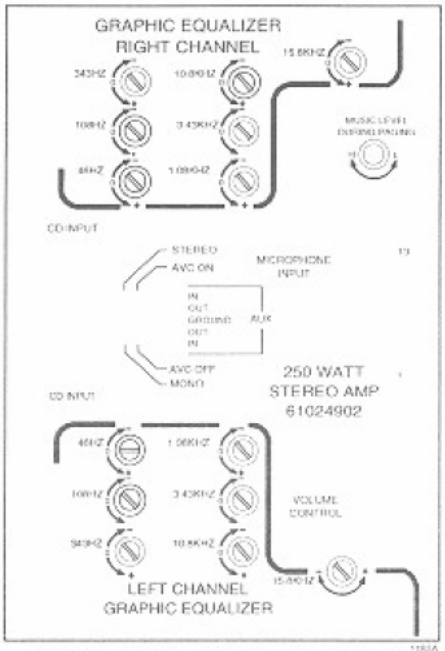

Figure 2-9B. "Average" Rooms

Hard or Non-Absorbent Rooms

Rooms that are paneled and have bare or tiled floors are considered to be "hard or nonabsorbent."

1. Turn all seven right channel and seven left channel graphic equalizer controls fully counterclockwise.
2. Turn the 15.8 KHz control all the way clockwise as shown to the right.
3. Turn the 10.8 KHz control to the position midway between the maximum and minimum position as shown to the right. Leave the 46 Hz, 108 Hz, 343 Hz, 1.08 KHz, and 3.43 KHz controls turned all the way counterclockwise.
4. The controls on the equalizer should now be set as shown to the right.
5. Play a selection and turn the controls slightly (no more than 1/8 of a turn at a time) until the sound is acceptable. Be sure that the phonograph volume is adequate. If the volume is not adequate, you will need to turn each control up (counterclockwise) slightly until the volume is satisfactory.

Remember: The maximum volume setting is obtained when all controls are turned full counterclockwise.

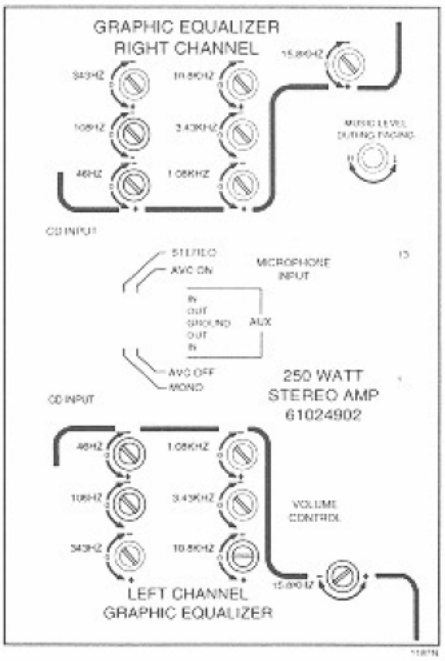

Figure 2-9C. "Non-Absorbent" Rooms

Paging

Paging circuitry is part of the Preamplifier. The microphone cable plugs directly into the preamplifier.

NOTE:

Basic installation and setup are now completed and the CD-100F is ready for your customer.

The remainder of Section 2 explains the Service Mode and other programmable features of the CD-100F.

Use the procedure that follows to clear or change remaining credits.

CHANGING THE NUMBER OF CREDITS REMAINING

Use these steps to increase or decrease the number of CREDITS REMAINING on the phonograph.

1. Enter the SERVICE mode by setting the SERVICE switch to the SERVICE position.

2. Type 84, then type the number of CREDITS REMAINING that you want. Press POPULAR to complete the change.

ENTERING THE SERVICE MODE

Menus can only be used while the phonograph is in the SERVICE mode. To enter the SERVICE mode, open the top door and place the SERVICE switch *(Figure 2-4)* in the SERVICE position.

When the phonograph is placed into the SERVICE mode, the message *SERVICE MODE* appears on the digital display *(See Figure 1-1 if you are not familiar with the keyboard or display).*

Occasionally, the message that first appears will say - ERRORS EXIST -. This is just an indication that a error has been logged. Pushing the POPULAR key will return the *SERVICE MODE* message.

NOTE:

The phonograph's display can display a maximum of 16 characters at a time. SERVICE **mode commands and messages are abbreviated to fit the 16-character space.**

VIEWING MENUS

To view a menu option, hold down the RESET button and press either the 0 digit or the 1 digit. The 1 digit will scroll down one item and the 0 will scroll up one item. This method of viewing menu options will allow you to view your options in any menu (or submenu). Refer to *Figure 2-10, The Service Mode Map,* and note that an arrow following the command indicates that a submenu exists. Press the POPULAR key to enter a submenu. Hold the RESET key and press the POPULAR key to exit a submenu.

IF YOU "GET LOST" IN THE MENUS

Since the menu mode of pricing and programming does not require you to use any reference material, you may (occasionally) find that you have ventured down the wrong menu and that you don't know what option is next. To correct this situation, perform the following steps:

1. Press and hold down RESET and then press 0 until you come to the top of current menu.

2. If this menu name doesn't help, press and hold RESET and then press POPULAR. This will move you to the top of the previous menu. In most cases, this will return you to the main menu (* SERVICE MODE *).

3. If you still cannot determine where you are, press and hold RESET and then press POPULAR again. Repeat this step until you get to the main menu (* SERVICE MODE *).

USING CD-100F COMMANDS

CD-100F commands are formed by combining the numbers that appear on the left side of the menus in *Figure 2-10.* To construct and use CD-100F commands, refer to *Figure 2-10* or *Table 2-4.*

Example: You want to view the number of cycles the CD mechanism has made. Using *Figure 2-10,* you determine that you need to select AUDITS (1), on the main menu; NON-RESETTABLES (2), on the AUDIT menu; and MECH (7), on the NON-RESETTABLES menu. Use the digits to form a numeric command, which is 127. Type 127 and the number of mechanism cycles is displayed.

NOTE:

To use the command mode effectively, return to the main menu after each command is completed. Do this by holding RESET **down and pressing** POPULAR **until the words** *SERVICE MODE* **appear on the digital display.**

Combining Menu And Command Modes

The most efficient way to set pricing and change programming is to use a combination of the menu mode and the command mode to move through the menus. To do this, use the command mode to get to the command you want to use, execute the command, and use the menu mode to go to your next selection.

CD SERIES SERVICE MODE MAP

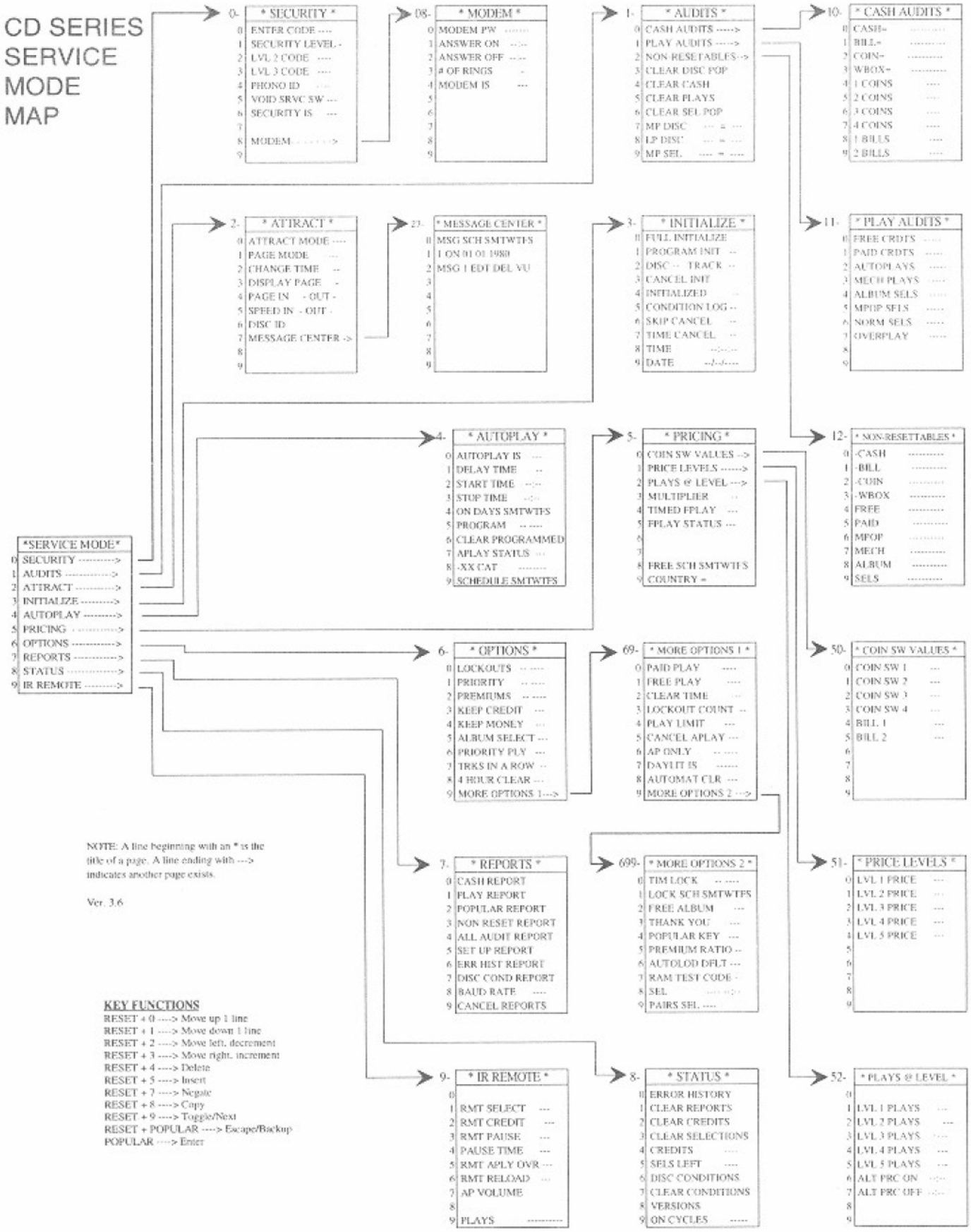

Figure 2-10. Service Mode Map

Service Mode Menu

The SERVICE MODE menu (referred to as the "MAIN menu") is the starting point for all service, pricing, and programming functions. This menu contains the general title for each submenu. Some of the submenus contain commands only. Other submenus contain both commands and further submenu names. Refer to *Figure 2-10*, the *CD-100F Service Mode Map*, for an illustration of the following menu descriptions:

Security Menu

This menu contains all of the command options that must be executed to display or change a phonograph security code or enter a security level. This menu also contains a command to change the phonograph ID.

The last SECURITY option, the VOID SERVICE SWITCH option, allows you to completely close the phonograph door (which places the SERVICE switch in the NORMAL position) and remain in the SERVICE mode.

Modem Menu

This menu contains the programming options for setting up the modem communication.

Audits Menu

The AUDITS menu allows you to display and clear the various cash, play, and popularity totals that are routinely reset when money is collected.

To enter this menu from the MAIN menu: Type 1.

Attract Mode Menu

Attract mode is designed to draw attention to customers by moving the selection pages.

To enter this menu from the MAIN menu: Type 2.

Message Center Menu

This menu contains the message center day scheduler, date scheduler, and message editor.

Initialize Menu

This menu controls the type of CD initialization that is to be done whenever a disc is changed or moved to a new disc number. This menu must be used to identify empty CD mechanism slots.

This menu also contains options to change the phonograph's time and date.

NOTE:

The phonograph will automatically adjust the disc limits whenever a disc is played. This form of initialization is not recommended as a substitute for the selections in this menu.

To enter this menu from the MAIN menu: Type 3.

Autoplay

Autoplay is the function that plays CD's when no customers have made selections. Autoplay can be used to stimulate play or provide background music. This feature can be scheduled and customized from the Autoplay menu.

To enter this menu from the MAIN menu: Type 4.

Pricing Menu

This menu allows you to change the pricing structure, select FREE PLAY, or return to the factory (default) pricing.

To enter this menu from the MAIN menu: Type 5.

Options Menu

This menu is a collection of disc selection options that allow you to:

- Prevent playing a track (Lockout)
- Give certain tracks priority play
- Charge a double price for certain selections
- Retain credits during a power failure
- Retain the current money total during a power failure
- Buy an entire album
- Limit the number of tracks that can be played from a disc before another disc is allowed to play.
- Retain or erase selections waiting to play if power is off for a significant interval of time, such as overnight (internally programmable from 0 to 999 minutes).

To enter this menu from the MAIN menu: Type 6.

More Options 1 Menu

This menu is a collection of options that allows you to:

- Select FIFO or random playback of selections
- Automatically lockout defective discs (Lockout Count)
- Cancel Autoplay when a paid selection is made.
- Use certain discs for Autoplay only (locked out from the keyboard)
- Automatic or manual Daylight Savings Time correction

More Options 2 Menu

This menu allows you to:

- Use timed lockouts
- Enable or disable the "Thank You" message
- Enable or disable album buys in FREE PLAY mode
- Enable or disable making most popular selections

Reports Menu (Optional)

The REPORTS options allow you to connect a printer or a personal computer to the RS-232 connector on the CCC. This information is the same information that can be displayed on the keyboard display, except that it has been arranged in a simple report format that can be printed or stored on a disk or diskette.

To enter this menu from the MAIN menu: Type 7.

Status Menu

This menu allows you to display and clear the various phonograph error messages, clear and set credits, clear selections, and display and clear disc condition messages, display software versions, and the number of power ON/OFF cycles.

To enter this menu from the MAIN menu: Type 8.

Remote Menu (Optional)

This menu allows you to set up various IR Remote options if an IR Remote module is connected to the phonograph.

To enter this menu from the MAIN menu: TYPE 9

HOW TO MAKE PROGRAMMING CHANGES

The CD-100F allows you to perform programming activities in two ways.

The primary or MENU mode uses menus to move through the choices until you find the desired function. This method of selecting the function you want is more time consuming than the COMMAND mode, but it does not require you to remember any commands.

The Command mode uses two and three digit commands to tell the phonograph what function you want to perform. The command mode requires you to know exactly what command you want, because you will go straight to the function requested without receiving any intermediate prompts (as you would in the menu mode).

Keyboard Controls

The POPULAR and RESET buttons on the selector keyboard *(See Figure 1-1 if you are not familiar with the selector keyboard or digital display)* are used to tell the phonograph how to use the digits that you are about to enter.
Table 2-3 describes the results of using these buttons.

Table 2-3. Keyboard Controls

Keys Pressed	Results
POPULAR	Completes a transaction
RESET + 0 (hold RESET down)	Moves you up one item in a menu
RESET + 1 (hold RESET down)	Moves you down one item in a menu
RESET + 2 (hold RESET down)	Moves you left, or decrements
RESET + 3 (hold RESET down)	Moves you right, or increments
RESET + 4 (hold RESET down)	Removes an entry (such as a programmed Autoplay entry) from the list.
RESET + 5 (hold RESET down)	Makes a space in a list (such as programmed Autoplay) so new information can be inserted.
RESET + 9 (hold RESET down)	Toggles between two possible selections.
RESET + POPULAR (hold RESET down)	Cancels the current activity or moves you back to the previous menu title.

Security Levels

The CD-100F uses security levels to protect audit and programmable information.

- Level 1 allows you to view all of the phonograph information, except the security codes, but does not allow you to change any of the information.
- Level 2 allows you to review all of the information, except the security codes, and clear the audit information.
- Level 3 allows you to view, clear, or change any information.

Factory Security Level

The phonograph is shipped from the factory with SECURITY OPTION (06) set to OFF.

NOTE:

When the SECURITY OPTION (06) is set to OFF, Security Level 3 is automatically established whenever the phonograph is in the SERVICE MODE.

If you set Security ON, Level 1 is established whenever the phonograph is put in the SERVICE MODE, and you must enter the proper four digit security code to change to Level 2 or Level 3.

NOTE:

The SECURITY option should be left OFF, unless you need security to prevent tampering with your music programming, pricing, or phonograph options.

Table 2-4, which follows, describes the commands and how to make programming changes.

Table 2-4. Menu & Command Descriptions

Code	Description

*** SERVICE MODE *** - Is the title of the MAIN menu. This menu is the beginning menu for all the other menus. All of the options in this menu are names for other menus. The table that follows contains descriptions of all of the menu options. Enter two, three, or four digit commands from the * SERVICE * MODE display.

0 **SECURITY** - Contains options to access and change the security levels and to change the phonograph I.D. All security code changes must be made from Security Level 3.

00 **Enter Code** - Allows you to enter a security code. If the security code that you enter matches either the Level 2 or Level 3 Security Code, the phonograph will go to that security level after you press POPULAR. If both Security Level 2 and Level 3 have the same code (the factory-set code for both levels is 0000), then Level 3 is allowed. When the new security level is attained, the phonograph will automatically go to Command 01, and display the new security level.

01 **Security Level** - Displays the current security level. This command can be used at any time to determine the security level. The phonograph automatically moves to this option and displays the new security level after you successfully enter a security code (see command 00).

02 **Level 2 Security Code** - Displays the Level 2 Security Code and allows the security code to be changed by entering new data, then pressing POPULAR. The phonograph must be in Security Level 3 for either of these selections to function. Write the new security code down and keep it in a safe, but accessible place. No one will be able to access Level 2 if the SECURITY OPTION 06 is turned ON and you loose the security code.

This security level is intended to be used by the route man, so that he can read cash totals, reset cash totals, and initialize the phonograph. The Route man cannot change pricing or programming.

03 **Level 3 Security Code** - Displays the Level 3 Security Code and allows the security code to be changed by entering new data, then pressing POPULAR. The phonograph must be in Security Level 3 before this code can be displayed or changed. Write the new security code down and keep it in a safe, but accessible place. No one will be able to access Level 3 or change the security code if SECURITY OPTION 06 is turned ON and you loose the security code.

04 **Phonograph I.D.** - Displays the current phonograph I.D. code and allows the I.D. to be changed by entering new data, then pressing POPULAR. The phonograph must be in Security Level 3 before the I.D. can be changed. It may be viewed in Security Level 1.

05 **Void Service Switch** - Allows the top door of the phonograph to be closed (which normally places the SERVICE switch back into the NORMAL mode) and still remain in the SERVICE mode. Press and hold RESET. Press 9 to toggle the option ON and OFF. Press POPULAR to save the change. This option must be OFF to resume normal operation.

06 **Security On/Off** - If set to OFF, Security Level 3 is automatically established when entering the SERVICE MODE.

When security is set to ON, Level 1 is established when SERVICE MODE is entered and the proper four digit security code must be entered to access Security Level 2 or 3.

Table 2-4. Menu & Command Descriptions
Continued

Code	Description
	Leave security OFF, unless you need security to prevent tampering. Hold RESET and press 9 to select ON or OFF. Press POPULAR to save your choice. Security can be turned ON from any security level, but can only be turned OFF in Security Level 3.
07	Not used
08	**Modem**- Contains the programming options for setting up the modem communications. For future use.
080	Modem password: For future use.
081	Answer ON: For future use.
082	Answer OFF: For future use.
083	# of Rings: For future use.
084	Modem Is: For future use.
1	**AUDITS** - Are the functions and menus that allow you to display and reset the various accumulated figures for money, popularity, number of plays, and credits.
10	**Cash Audits** - Is the menu that allows you to display, but not change, cash totals, number of coins through the coin switches, and the total number of bills.
11	**Play Audits** - Is the menu that allows you to display, but not change, credits, autoplays, mechanism plays, and album plays.
12	**Non-resettables** - Is the menu that allows you to display the ongoing totals. These totals cannot be reset from any security level.
13	**Clear Disc Popularity** - Clears the popularity for all discs. This option should only be used after the popularity figures (Selections 7, and 8 in this menu) have been read and recorded. Press POPULAR to perform this function. The display will blink when the command is executed.
14	**Clear Cash** - Clears all current cash totals. This option should only be used after the figures for Cash Audits (Selection 0 in this menu) have been read and recorded. Press POPULAR to perform this function. The display will blink when the command is executed.
15	**Clear Plays** - Clears all current play totals. This option should only be used after the Play Audit figures in Play Audits (Selection 1 in this menu) have been read and recorded. Press POPULAR to perform this function. The display will blink when the command is executed.
16	**Clear Selection Popularity** - Clears all current selection popularity. This option should only be used after Popularity Figures (Selection 9 in this menu) have been read and recorded. Press POPULAR to perform this function. The display will blink when the command is executed.

Table 2-4. Menu & Command Descriptions

Continued

Code	Description
17	**Display The Most Popular Disc** - Displays the most popular disc number (00-99), followed by the number of plays (9999 maximum) that disc had. To display the next "Most Popular" disc, press and hold RESET and then press 3. Press and hold RESET and then press 3 to display each successive most popular disc. Press and hold RESET and then press 2 to move up through the popularity display toward the most popular disc. You can request the popularity for a particular disc by pressing the disc number.
18	**Display The Least Popular Disc** - Displays the least popular disc number (00-99) followed by the number of plays that the disc had. To display the next "Least Popular" disc, press and hold RESET and then press 2. Press and hold RESET and then press 2 to display each successive least popular disc. Press and hold RESET and then press 3 to move up through the popularity display toward the least popular disc. You can request the popularity for a particular disc by pressing the disc number.
19	**Display The Most Popular Selection** - Displays the most popular selection number (Disc 00-99 followed by Selection 00-99, a total of four digits), followed by the number of plays (9999 maximum) that selection had. To display the next "Most Popular" selection, press and hold RESET and then press 3. Press and hold RESET and then press 3 to display each successive most popular selection. Press and hold RESET and then press 2 to move up through the popularity display toward the most popular selection. A total of 100 selection numbers may be contained in the MOST POPULAR list. You can request the popularity for a particular selection by pressing the selection number (four digits).
10	**CASH AUDITS** - Allows you to display, but not change, cash totals, number of coins through the coin switches, and the total number of bills.
100	**Current Cash** - Displays the total amount of bill and coin money collected since the last time the CLEAR CASH command (Selection 4 in the AUDITS menu) was used.
101	**Current Bill** - Displays the total amount of bill money collected since the last time the CLEAR CASH command (Selection 4 in the AUDITS menu) was used.
102	**Current Coin** - Displays the total amount of coin money collected since the last time the CLEAR CASH command (Selection 4 in the AUDITS menu) was used.
103	**Current Wallbox** - Displays the total amount of money collected by Wallboxes since the last time the CLEAR CASH command (Selection 4 in the AUDITS menu) was used.
104	**Current Number Of Type 1 Coins** - Displays the total number of Type 1 coins (5¢) collected since the last time the CLEAR CASH command (Selection 4 in the AUDITS menu) was used.

Table 2-4. Menu & Command Descriptions
Continued

Code	Description
105	**Current Number Of Type 2 Coins** - Displays the total number of Type 2 coins (10¢) collected since the last time the CLEAR CASH command (Selection 4 in the AUDITS menu) was used.
106	**Current Number Of Type 3 Coins** - Displays the total number of Type 3 coins (25¢) collected since the last time the CLEAR CASH command (Selection 4 in the AUDITS menu) was used.
107	**Current Number Of Type 4 Coins** - Displays the total number of Type 4 coins (50¢) collected since the last time the CLEAR CASH command (Selection 4 in the AUDITS menu) was used.
108	**Number Of Type 1 Bills** - Displays the total number of Type 1 bills ($1) collected since the last time the CLEAR CASH command (Selection 4 in the AUDITS menu) was used.
109	**Number Of Type 2 Bills** - Displays the total number of Type 2 bills ($5) collected since the last time the CLEAR CASH command (Selection 4 in the AUDITS menu) was used.
11	**PLAY AUDITS** - Allows you to display, but not change, credits, autoplays, mechanism plays, and album plays.
110	**Free Credits** - Displays the number of free credits given since the last time the CLEAR PLAYS command (Selection 5 in the AUDITS menu) was used.
111	**Paid Credits** - Displays the number of paid credits given since the last time the CLEAR PLAYS command (Selection 5 in the AUDITS menu) was used.
112	**Autoplays** - Displays the number of Autoplays made since the last time the CLEAR PLAYS command (Selection 5 in the AUDITS menu) was used.
113	**Mechanism Plays** - Displays the number of times the mechanism has played CD's since the last time the CLEAR PLAYS command (Selection 5 in the AUDITS menu) was used.
114	**Album Buys** - Displays the number of times albums have been bought since the last time the CLEAR PLAYS command (Selection 5 in the AUDITS menu) was used.
115	**Most Popular Plays** - Displays the number of times that the POPULAR button was used to select the most popular selection since the last time the CLEAR PLAYS command (selection 5 in the AUDITS menu) was used.
116	**Normal Selections** - Displays the number of selections made from the keyboard.
117	**Overplay Counter** - Displays the number of overplays selected since the last time the CLEAR PLAYS command (Selection 5 in the AUDITS menu) was used. The overplay counter is part of the CCC's memory, which keeps track of how many duplicate selections were made. A selection is considered to be a duplicate if it has been entered, but the CCC has not sent the selection number to the CD mechanism controller.

Table 2-4. Menu & Command Descriptions
Continued

Code	Description
12	**NON-RESETTABLES** - These totals for cash, plays, and credits can be displayed from any security level, but they cannot be reset from any security level. These totals constitute the permanent phonograph history.
120	**Cash** - Displays total cash (bill and coin) received by the phonograph.
121	**Bill** - Displays total bill cash received by the bill acceptor.
122	**Coin** - Displays total coin cash received by the coin acceptor.
123	**Wallbox** - Displays total cash received by all Wallboxes.
124	**Free** - Displays total free credits.
125	**Paid** - Displays total paid for credits.
126	**Most Popular** - Displays the total number of Most Popular selections made with the POPULAR button.
127	**Mechanism** - Displays the total number of mechanism cycles.
128	**Album** - Display total album buys.
129	**Selections** - Displays the total number of selections made using the keyboard.
2	**ATTRACT** - This menu sets ATTRACT MODE ON or OFF and defines the ATTRACT MODE's characteristics.
20	**Attract Mode** - Displays and toggles the ATTRACT MODE. Hold RESET while pushing 9 to toggle ON or OFF. Press POPULAR to save the change.
21	**Page Mode** - Displays and toggles the automatic page selection mode. Hold RESET while pushing 9 to toggle OFF, CHANGE or AD. Press POPULAR to save the change. If OFF, the automatic page change selection is disabled. If CHANGE, a page will flip when the CHANGE TIME INTERVAL (22) elapses and the phonograph is in standby. If AD, the page mechanism will park at the DISPLAY PAGE (23) location when the CHANGE TIME INTERVAL elapses and the phonograph is in standby.
22	**Change Time** - Displays and sets the time interval for page changes (1 minute minimum) in minutes. Type in the new time in minutes then press POPULAR.

Table 2-4. Menu & Command Descriptions
Continued

Code	Description
23	**Display Page** - Page to be displayed in the AD mode. Type in the new page number then press POPULAR.
24	**Title Page Number Control** - Controls the first and last page that can be selected from the keyboard. Type the low page number for IN then press POPULAR. Type the high page number for OUT then press POPULAR Again.
25	**Title Page Speed Control** - Controls the speed that the title pages will change. The IN value is the speed that the pages will turn when they are moving up, and the OUT value is the speed that the pages will turn when they are moving down. The allowable selections are 1-9. Type the new speed number for IN, then press POPULAR. Type the new speed number for OUT, then press POPULAR again.
26	**Disc ID** - Displays the ten-digit ID code for each disc. (**NOTE:** Mech control Eprom must be version 5.1 or greater.
27	**Message Center** - Is the menu that allows you to create and edit messages and alter the times and dates the messages are to appear.
270	**MSG SCH SMTWTFS** - Allows you to select the time, and days of the week the messages will be displayed. See " Programming the Rowe Message center."
271	**1 ON 01 01 1980** - Allows you to display a message for one or several days. See "Programming the Rowe Message Center."
272	**MSG 1 EDT DEL VU** - Allows you to create, edit, or delete messages. See "Programming the Rowe Message Center."
28-29	Not used.
3	**INITIALIZE** - This menu establishes the CD track numbers and saves them.
30	**Full Initialize** - Starts full mechanism initialization. Press POPULAR to select and note that the display will blink when this command is executed. All disc limits are set to 99, then as each disc is scanned, new limits are automatically entered into memory. Initialization begins when the SERVICE switch is moved to the NORMAL position. Full initialization takes about 30 minutes. During this time, selections can be played, but initialization will not continue until the phonograph is scanned out.
31	**Program Initialize** - Initializes specific discs automatically. Type the disc number to be initialized then press POPULAR. Type disc numbers until all disc numbers that need initializing have been entered. Initialization will begin when the service switch is moved back to the NORMAL position.

Table 2-4. Menu & Command Descriptions

Continued

Code	Description
32	**Disc Initialize and Track Limits** - Allows you to view and change disc limits manually. To view disc limits, type the disc number. Press and hold RESET then press 3 (next disc) or 2 (previous disc) to view the next or previous disc limits. To a change a disc's limits, display the limits then press POPULAR. Type the new limits, then press POPULAR.
33	**Cancel Initialization** - Cancels initializations that have been started with either of the previous options (30 or 31). Press POPULAR to perform this function. The display will blink when the command is executed.
34	**Initialized** - Displays the number of discs that have been initialized.
35	**Number Of Skips or Time Error Before Log** - Allows logging disc conditions without canceling selections. Type the new number, then press POPULAR. *See Disc Conditions in Section 5* for a detailed explanation of the Skip Log.
36	**Skip Cancel** - Determines the maximum number of times that a CD may skip while playing before it is automatically canceled. Type the new number then press POPULAR. *See Disc Conditions in Section 5* for a detailed explanation of SKIP CANCEL.
37	**Time Cancel** - The absolute time difference in seconds between current playing position (time position on the CD) and actual running time (phonograph time) before it is automatically canceled. Type the new number then press POPULAR. *See Disc Conditions in Section 5* for a detailed explanation of TIME CANCEL.
38	**Time HH:MM:--** - Displays and sets the time-of-day. Hours and minutes can be entered, seconds will begin automatically at "00" (midnight) and count to 23:59, which is the 24-hour clock, or "military time". Type the new hours and press POPULAR. Type the new minutes and then press POPULAR.

Midnight	Is entered as 00:00. 12:59 pm (after noon) is the same, but:		
1:00 pm	Is entered as 13:00 and all the succeeding times are entered as 12+ the hour:		
	12:59 pm = 12:59	5:00 pm = 17:00	10:00 pm = 22:00
	1:00 pm = 13:00	6:00 pm = 18:00	11:00 pm = 23:00
	2:00 pm = 14:00	7:00 pm = 19:00	12:00 am = 00:00
	3:00 pm = 15:00	8:00 pm = 20:00	
	4:00 pm = 16:00	9:00 pm = 21:00	

39	**Date MM/DD/YYYY** - Displays and sets the date. Any date from the year 1980 to 2087 is allowed.
4	**AUTOPLAY** - This menu sets AUTOPLAY ON or OFF and defines the Autoplay characteristics.

If AUTOPLAY IS (COMMAND 40) has been set to STD, then COMMANDS 40 through 47 in this table apply.

If AUTOPLAY IS (COMMAND 40) has been set to CDT, then COMMANDS 40 through 44 and COMMAND 47 in this table apply.

Table 2-4. Menu & Command Descriptions
Continued

Code	Description

If AUTOPLAY IS (COMMAND 40) has been set to ENH, then COMMANDS 40 through 49 apply and you should read about how to used these commands in the *Enhanced Autoplay Tutorial* that appears at the end of this section.

40 **Autoplay Is** - Displays and sets the AUTOPLAY style to either STANDARD, ENHANCED, CREDIT, or OFF. Press and hold RESET and then press 9 to toggle between the four options and press POPULAR to select the option that you want.

41 **Delay Time** - Displays and sets the time between Autoplay selections or displays and sets the time between giving a Credit. Type the number in minutes then press POPULAR. This command is used only in STANDARD and CREDIT Autoplay. Set TIME DELAY to 00 for continuous Autoplay or Credit (as for background music).

42 **Start Time** - Sets the time-of-day that Autoplay is allowed to begin making Autoplay selections or to begin to give Credits. Enter the time in 24-hour format (*see the table that follows Stop Time*). Type the hour then press POPULAR. Type the minute then press POPULAR. Both the hour and minute must be changed together.

43 **Stop Time** - Sets the time-of-day that Autoplay will no longer be allowed to make selections or give credits. If you are not familiar with 24-hour time keeping, use the following table to help you figure the 24-hour time.

Midnight — Is entered as 00:00. 12:59 pm (after noon) is the same, but:

1:00 pm — Is entered as 13:00 and all the succeeding times are entered as 12+ the hour:

12:59 pm = 12:59	5:00 pm = 17:00	10:00 pm = 22:00
1:00 pm = 13:00	6:00 pm = 18:00	11:00 pm = 23:00
2:00 pm = 14:00	7:00 pm = 19:00	12:00 am = 00:00
3:00 pm = 15:00	8:00 pm = 20:00	
4:00 pm = 16:00	9:00 pm = 21:00	

44 **On Days SMTWTFS** - Allows you to select the days of the week that Autoplay can make selections or give credits. Press and hold RESET then press either 2 or 3 to move from day to day. The day currently selected will blink. Hold RESET and then press 9 to turn the day ON or OFF. Press POPULAR to save any changes.

45 **Programmed** - Displays and changes the individual selection numbers that will be played. This mode allows you have Autoplay play specific selections or discs. A maximum of 100 selections or discs can be programmed. On the menu, the two-digit number is the play sequence number and the four-digit number is the selection number.

If no programmed selections are made, the Autoplay function will select a random disc and a random track each time Autoplay makes a selection. If one or more selections are programmed, the programmed selections will be selected. A disc number followed by two zeros can be programmed. If you request disc 6300, for example, then Disc 63 will be programmed and a random track will be played from that disc (*see Programming Autoplay, Premiums, Priorities, Lockouts, and Pairs*).

Table 2-4. Menu & Command Descriptions
Continued

Code	Description
46	**Clear Programmed Mode** - Clears all programmed selections entered in COMMAND 45. Press POPULAR to perform this function. The display will blink when the command is executed.
47	**Autoplay Status** - Allows you to change the AUTOPLAY STATUS immediately, without waiting for the START or STOP time of day. Hold RESET then press 9 to toggle the status ON or OFF. Press POPULAR to save the changes.
48	**XX Cat** - Assigns categories to discs in Enhanced Autoplay.
49	**Schedule SMTWTFS** - The active days, time(s), categories, and delay(s) between Autoplay selections in Enhanced Autoplay.
5	**PRICING** - This menu allows the operator to change CD pricing, coin switch values, credit levels, credit values, credit multiplier, and Free Play value
50	**COIN SWITCH VALUES:** - Is a menu that displays and sets various coin switch values.
500	----- -----
501	**Coin SW1 = XX** - Displays and sets the #1 COIN SWITCH VALUE. Type the new value and then press POPULAR.
502	**Coin SW2 = XX** - Displays and sets the #2 COIN SWITCH VALUE. Type the new value and then press POPULAR.
503	**Coin SW3 = XX** - Displays and sets the #3 COIN SWITCH VALUE. Type the new value and then press POPULAR.
504	**Coin SW4 = XX** - Displays and sets the #4 COIN SWITCH VALUE. Type the new value and then press POPULAR.
505	**Bill 1 = XX** - Displays and sets the #1 BILL VALUE. Type the new value and then press POPULAR.
506	**Bill 2 = XX** - Displays and sets the #2 BILL VALUE. Type the new value and then press POPULAR.
507	-through 509 not used.
51	**PRICE LEVELS:** - Is a menu that displays various credit levels.
510	----- -----

Table 2-4. Menu & Command Descriptions
Continued

Code	Description
511	**LVL1 Price = XX** - Displays and sets the price of the 1st credit level. Type the new value and then press POPULAR.
512	**LVL2 Price = XX** - Displays and sets the price of the 2nd credit level. Type the new value and then press POPULAR.
513	**LVL3 Price = XX** - Displays and sets the price of the 3rd credit level. Type the new value and then press POPULAR.
514	**LVL4 Price = XX** - Displays and sets the price of the 4th credit level. Type the new value and then press POPULAR.
515	**LVL5 Price = XX** - Displays and sets the price of the 5th credit level. Type the new value and then press POPULAR.
516	-through 519 not used.
52	**PLAYS @ LEVEL:** - Is a menu that displays and edits credit values.
520	----- -----
521	**LVL1 Plays = XX** - Displays and sets the number of plays given for this credit level. Type the new value and then press POPULAR. When setting, hold RESET and push 9 to select normal or alternate plays.
522	**LVL2 Plays = XX** - Displays and sets the number of plays given for this credit level. Type the new value and then press POPULAR. When setting, hold RESET and push 9 to select normal or alternate plays.
523	**LVL3 Plays = XX** - Displays and sets the number of plays given for this credit level. Type the new value and then press POPULAR. When setting, hold RESET and push 9 to select normal or alternate plays.
524	**LVL4 Plays = XX** - Displays and sets the number of plays given for this credit level. Type the new value and then press POPULAR. When setting, hold RESET and push 9 to select normal or alternate plays.
525	**LVL5 Plays = XX** - Displays and sets the number of plays given for this credit level. Type the new value and then press POPULAR. When setting, hold RESET and push 9 to select normal or alternate plays.

Table 2-4. Menu & Command Descriptions

Continued

Code	Description
526	**ALT PRC ON HH:MM** - Displays and sets the time of day alternate pricing turns on. Enter the time in 24 hour format. Alternate pricing gives ALT 1 PLAYS XX, ALT 2 PLAYS XX, ETC. instead of LVL 1 PLAYS XX, LVL 2 PLAYS XX, etc.
527	**ALT PRC OFF HH:MM** - Displays and sets the time of day alternate pricing turns off. Set the OFF time equal to the ON time (code 526) if you do not want alternate pricing.
528	-through 529 not used.
53	**Multiplier** - Displays and sets the coin multiplier value. For the U.S., this value is 5 (nickel). Type the new number then press POPULAR.
54	**Timed Free Play** - Turns ON or turns OFF the timed free play schedule. Hold RESET then press 9 to toggle ON or OFF. Press POPULAR to save the change (*see the Timed Free Play Example* in this section).
55	**Free Play Status** - Allows you to turn free play ON or OFF immediately without waiting for the start or stop time. Hold RESET then press 9 to toggle ON or OFF. Press POPULAR to save the change.
56	**NOT USED**
57	**NOT USED**
58	**FREE SCH SMTWTFS** - Allows you to select the days of the week and start and stop times for the Timed Free Play feature (*see the Timed Free Play and Timed Lockout Scheduling Tutorial* in this section).
59	**Load Country Settings** - Loads the factory (default) settings for different countries. Hold RESET, then press 9 to toggle between United States (US), Australia (AUSTRA), United Kingdom (UK), and Canada (CANADA) pricing. The display will blink when the command is executed.
6	**OPTIONS** - Displays and allows you to change the phonograph's miscellaneous options.
60	**Lockouts** - Displays and selects lockout selections or discs (50 maximum). These selections are not allowed to be selected by the customer or AUTOPLAY (*see Programming Autoplay, Premiums, Priorities, Lockouts, and Pairs*). If a locked-out selection is attempted, the words "Not Allowed" will momentarily appear on the display.
61	**Priorities** - Displays and sets priority selections (30 maximum). When these selections are made by the customer, they will be inserted at the top of the play list and they will be played next (*see Programming Autoplay, Premiums, Priorities, Lockouts, and Pairs*).

Table 2-4. Menu & Command Descriptions
Continued

Code	Description
62	**Premiums** - Displays and sets premium selections. These selections (30 maximum) will be priced at 2 to 99 times the regular price (*see Programming Autoplay, Premiums, Priorities, Lockouts, Pairs, and Menu Code 6995*).
63	**Keep Credit** - Displays and toggles the KEEP CREDIT option ON or OFF to allow retaining or canceling credit upon Power up. Hold RESET and press 9 to toggle ON or OFF. Press POPULAR to save the changes.
64	**Keep Money** - Displays and toggles the KEEP MONEY option ON or OFF to allow retaining or canceling money on power up. Hold RESET and press 9 to toggle ON or OFF. Press POPULAR to save the change.
65	**Album Buy** - Displays and toggles the ALBUM BUY options ON, OFF, or JUK so that entire albums can be selected. Albums can be selected from the phonograph Wallbox and IR remote control if set to ON. They can be selected from the phonograph and Wallbox if set to JUK. Hold RESET and press 9 to toggle ON, OFF, or JUK. Press POPULAR to save the change.
66	**Priority Play** - Displays and toggles PRIORITY PLAY from ON to OFF. When PRIORITY PLAY is ON, priority plays will be allowed. When PRIORITY PLAY is OFF, this feature is disabled. Hold RESET and press 9 to toggle ON or OFF. Press POPULAR to save the change.
67	**Tracks In A Row** - Displays and sets the maximum number of tracks (sequential selections) that can be played from one disc. Type the new number then press POPULAR.
68	**4-Hour Clear** - Displays and toggles the 4-Hour Clear option ON or OFF. When 4-Hour Clear is ON, all selections remaining to be played will be cleared (if the phonograph is turned OFF for more than 4 consecutive hours, or the number of minutes entered by COMMAND 692). When this option is OFF, selections to be played will remain in the phonograph's memory and they will play when the phonograph is turned back ON. Hold RESET and press 9 to toggle this option ON or OFF. Press POPULAR to save the change.
69	**MORE OPTIONS 1** - The MORE OPTIONS 1 menu is a continuation of the OPTIONS menu.
690	**Paid Play** - Determines the play sequence for paid selections. This option toggles between random (RAND) and FIFO (First In First Out) sequences. Hold RESET and press 9 to toggle RAND or FIFO. Press POPULAR to save the change.
691	**Free Play** - Determines the play sequence for free selections. This option toggles between random (RAND) and FIFO (First In First Out) sequences. Hold RESET and press 9 to toggle RAND or FIFO. Press POPULAR to save the change.
692	**Clear Time** - Allows values from 00 to 999 minutes for the 4-HOUR CLEAR (68) TIME. The factory setting is 240 minutes. Type the new number, then press POPULAR.

Table 2-4. Menu & Command Descriptions

Continued

Code	Description
693	**Lockout Count** - Adds the selection to the LOCKOUT LIST (60) when the DISC CONDITIONS NUMBER OF SKIP OCCURRENCES reaches the programmed value. To change the LOCKOUT COUNT, type the new number and then press POPULAR.
694	**Play Limit** - Sets a maximum time for a selection to play before it is canceled. A 0 entry disables this feature. Valid times are from 60 to 999 seconds. If the optional volume control module is installed, the volume of the selection will fade before the selection is canceled.
695	**Cancel Autoplay** - Cancels the autoplay selection when a paid selection is entered. When this feature is turned ON, the Autoplay selection will cancel within 15 seconds and the paid selection will play next. When this feature is turned OFF, the Autoplay selection will finish playing before the paid selection plays. The default for this feature is ON.
696	**Autoplay Only** - Stores the disc numbers for up to 25 discs. These disc numbers can be selected by Autoplay, but they cannot be selected by customers (*see Programming Autoplays, Premiums, Priorities, Lockouts, and Pairs).*
697	**Daylight Savings Time** - Automatically adjusts daylight saving time. STD moves the clock ahead one hour at 2:00 am on the first Sunday of April. This mode will, also, move the clock back one hour at 2:00 am on the last Sunday of October. NONSTD lets you select which months and days of the month that daylight savings will be turned ON and OFF. Hold RESET and press 9 to select STD, NONSTD, or OFF. Press POPULAR to save your choice. If you select NONSTD, the display shows DAYLIT ON - - / - -. Type two digits for the month code to turn daylight savings ON and then press POPULAR. Type the two digit day number (1 through 31). Note that the CCC will only accept the correct maximum number. Then press POPULAR. Hold RESET, and then press 9 to change the display to show: DAYLIT OFF - - / - -. Type two digits for the month code to turn daylight savings OFF and then press POPULAR. Type the two digit day number (1 through 31). Note that the CCC will only accept the correct maximum number. Then press POPULAR.
698	**Automat Clr** - Clears audit data. If this command is set to ON, and the AUDIT START button has been used to start the report, then the audit data will be cleared when the printing stops and the phonograph is in NORMAL mode. Hold RESET and press 9 to toggle this command ON and OFF. Press POPULAR to save your choice.
699	**More Options 2** - This menu is a continuation of the OPTIONS menu.
6990	**Timlock** - Displays and sets timed lockout selections or discs (25 maximum). *See Programming Autoplay, Premiums, Priorities, Lockouts, and Pairs.*

Table 2-4. Menu & Command Descriptions
Continued

Code	Description
6991	**Locksch SMTWTFS** - Allows you to select the days of the week and the start and stop times for timed lockouts (*See the Timed Free Play And Timed Lockouts Scheduling Tutorial*).
6992	**Free Album** - Allows entire albums to be selected if FREE PLAY (55) and ALBUM BUY (65) are ON. Hold RESET and press 9 to toggle this command ON and OFF. Press POPULAR to save your choice.
6993	**Thank You On/Off** - If set to ON, the "Thank You" message is briefly displayed when a customer completes his final selection (the credit goes to zero). Hold RESET and press 9 to toggle this command ON and OFF. Press POPULAR to save your choice.
6994	**POPULAR Key ON/OFF** - If set to ON, most POPULAR selections are allowed using the POPULAR key. If set to off, most popular selections are not allowed. Hold RESET, and press 9 to toggle ON and OFF. Press POPULAR to save.
6995	**PREMIUM RATIO** - Displays and sets the number of credits needed to make a premium selection (see *Code 62*).
6996	**AUTOLOD DFLT** - Displays and toggles the autoload default option. Factory default settings will load automatically if a RAM CHECKSUM ERROR occurs and this option is ON. Set this option to OFF if you do not want factory settings loaded automatically.
6997	**RAM TEST CODE** - Displays status of RAM. 0 indicates that RAM test passed. 1 indicates a disc limit error, 2 indicates a PREMIUM, LOCKOUT, or PRIORITY LIST error, and 3 indicates a pricing or other error.
6998	**SEL XXXX HH:MM** - Displays and sets time of day for a specific selection to play. Type in selection number, then press POPULAR. To remove selection, hold RESET and push 9. Type in hour, press POPULAR. Type in minutes, press POPULAR.
6999	**PAIRS SEL ----** - Displays and sets paired selections (10 maximum). Paired selections are a short teaser and the following selection, or a selection and the following short trailer. If either of the pair is selected, the other is selected automatically for free. When programming, enter first selection of pair (i.e., teaser if teaser and selection; or selection if selection and trailer). *See Programming Autoplay, Premiums, Priorities, Lockouts, and Pairs.*
7	**REPORTS** - The REPORTS menu provides an output to an RS-232 serial printer or computer with an RS-232 serial interface. To use this feature, the RS-232 Option must be installed in the phonograph. To select and print the report, type the code for the report and press POPULAR. The display will blink when the command is executed.

Table 2-4. Menu & Command Descriptions
Continued

Code	Description
70	**Cash Report** - Starts the Cash Report
71	**Play Report** - Starts the Play Report
72	**Popular Report/Disc ID** - Starts a Popularity Report. If a Disc ID Report is desired, hold RESET and press 9, release keys, then press POPULAR.
73	**Non-Resettable Report** - Starts the report of all non-resettable numbers
74	**All Audit Report** - Starts all 4 audit reports
75	**Setup Report** - Starts the phonograph Setup Report
76	**Error History Report** - Starts the Accumulated Phonograph Errors Report
77	**Disc Condition Report** - Starts the Disc Condition Report
78	**Baud Rate** - Selects either 600, 1200, 2400, 4800, or 9600 baud for printing reports. Hold RESET and press 9 to toggle between 600, 1200, 2400, 4800, and 9600 baud. Press POPULAR to save the change. Also, Spec Report is used to eliminate spaces from the report. Type 0001, then press POPULAR to eliminate spaces. To retain spaces, type 0000, then press POPULAR. A carriage return delay (CR MS Delay) is available to interface with slower printers.
79	**Cancel Reports** - Stops all report printing
8	**STATUS** - The STATUS menu defines credit and displays figures, which indicate the condition of the phonograph
80	**Error History** - Displays the error history of the phonograph (*see Errors and Warnings in Section 5*)
81	**Clear Errors** - Clears all errors from the phonograph's error log. Press POPULAR to perform this function. The display will blink when this command is executed.
82	**Clear Credits** - Clears all current credit. Press POPULAR to perform this function. The display will blink when this command is executed.
83	**Clear Selections** - Clears all selections remaining to be played. Press POPULAR to perform this function. The display will blink when this command is executed.
84	**CREDITS** - Displays and changes the number of credits. Type the number of credits then press POPULAR.

Table 2-4. Menu & Command Descriptions
Continued

Code	Description
85	**Selections Left** - Displays the current number of selections left to be played.
86	**Disc Conditions** - Displays the condition of discs played (*see Disc Conditions in Section 5*).
87	**Clear Conditions** - Clears current conditions from the phonograph. Press POPULAR to perform this function. The display will blink when this command is executed.
88	**Display Software Versions** - Displays the current version number of phonograph modules. Hold RESET and press 3 to view the next device version number.
89	**ON/OFF Cycles** - Displays and changes the number of ON/OFF cycles.
9	**IR REMOTE** - The IR REMOTE menu activates and defines IR REMOTE options.
90	**Not used**
91	**Remote Selections** - Displays and sets remote selections to ON, OFF, ICD, or XCD. If this command is set to ON, you can always use the IR remote control to make a selection or give a credit. If this command is set to OFF, remote control selections and credits are not allowed at all. If this command is set to ICD, remote control selections and credits are allowed as long as REMOTE CREDIT (92) exceeds zero. If set to XCD, remote control selections are allowed when remote credit (92) or external credit (selections remaining on digital display) exceeds zero, and remote control credits are allowed when remote credit (see 92) exceeds zero. Hold RESET, push 9 to select ON, OFF, ICD or XCD. Press POPULAR to save.
92	**Remote Credit** - Displays and changes the number of internal remote credits. If RMT SELECT (91) is set to ICD or XCD, remote credits are decremented each time you use the IR remote control to make a selection or give a credit. Type the number of credits, then press POPULAR.
93	**Remote Pause** - Allows the remote to pause the phonograph if this feature is set to ON. Hold RESET and press 9 to toggle this command ON and OFF. Press POPULAR to save your choice.
94	**Remote Pause Time** - Displays and sets the number of minutes the phonograph can be paused. Type the new number, then press POPULAR to save your choice.
95	**Remote Autoplay Override** - Allows the remote to turn Autoplay either ON or OFF if this feature is ON. Hold RESET and press 9 to toggle ON and OFF. Press POPULAR to save your choice.
96	**Remote Reload** - Once a week (on Monday) the value in this location is added to the REMOTE CREDIT (MENU COMMAND 92). Type the number of credits you want to give each week. Press POPULAR to save your choice.

Table 2-4. Menu & Command Descriptions

Continued

Code	Description
97	**Autoplay Volume** - Displays and sets autoplay volume to OFF, SEPART, or LOCKED. Hold RESET and press 9 to toggle between OFF, SEPART, AND LOCKED. Push POPULAR to save your choice. If set to OFF, autoplays and paid selections play at same volume. If SEPART (separate) they can be adjusted to different levels during play. If LOCKED, the autoplay volume can be set and locked to the level you want. To set the locked level, make a selection, wait until it starts playing then go to the SERVICE mode. Type 97. Hold reset and toggle 9 until display shows AP VOLUME LOCKED, then press POPULAR. Use IR remote to set the volume you like for autoplay.
98	**Not used**
99	**Remote Plays** - Displays the number of selections made from the remote.

Table 2-5. CD-100F Command Index

Function	Menu	Command
Album		
free - on/off	OPTIONS	6992
maximum tracks in a row	OPTIONS	67
Select - on/off	OPTIONS	65
Attract mode		
change time between page changes	ATTRACT	22
select a specific "AD" page	ATTRACT	23
set speed that title pages turn	ATTRACT	25
set title page number limits	ATTRACT	24
turn attract on/off	ATTRACT	20
turn auto page changes on/off	ATTRACT	21
disc ID codes	ATTRACT	26
Audits		
all audit	REPORTS	74
automatic clear	OPTIONS	698
cash	AUDITS	100-109
non-resettable	AUDITS	120-129
play	AUDITS	110-117
Autoplay		
clear programmed Autoplay	AUTOPLAY	46
cancel autoplay select early on/off	OPTIONS	695
display or change		
start time	AUTOPLAY	42
stop time	AUTOPLAY	43
days of the week	AUTOPLAY	44
enhanced categories	AUTOPLAY	48
enhanced schedules	AUTOPLAY	49
autoplay only discs	OPTIONS	696
select a specific disc and track	AUTOPLAY	45
autoplay status on/off	AUTOPLAY	47
time between Autoplays	AUTOPLAY	41
turn Autoplay on/off	AUTOPLAY	40
Baud Rate	REPORTS	78
Bill values	PRICING	505-506

Table 2-5. CD-100F Command Index

Continued

Function	Menu	Command
Cash		
clear	AUDITS	14
keep credit after power failure on/off	OPTIONS	63
keep money after power failure on/off	OPTIONS	64
multiplier	PRICING	53
report	REPORTS	70
Clear		
cash	AUDITS	14
conditions	STATUS	87
credits	STATUS	82
disc popularity	AUDITS	13
errors	STATUS	81
plays	AUDITS	15
programmed autoplay selections	AUTOPLAY	46
selection popularity	AUDITS	16
selections	STATUS	83
Coin switch values	PRICING	501-504
Credit		
clear credits	STATUS	82
display or change credits	STATUS	84
free play - on/off	PRICING	55
keep credit after power failure on/off	OPTIONS	63
levels	PRICING	511-515
multiplier	PRICING	53
remaining	STATUS	84
selections remaining	STATUS	85
values	PRICING	521-525
autoplay	AUTOPLAY	40-44, 47
Date and time change	INITIALIZE	39 and 38
Daylight saving time settings		
saving time OFF/STD/NONSTD	OPTIONS	697
saving time ON date (non standard only)	OPTIONS	697
saving time OFF date (non standard only)	OPTIONS	697
Default pricing	PRICING	59

Table 2-5. CD-100F Command Index

Continued

Function	Menu	Command
Disc		
Autoplay	AUTOPLAY	40-47
clear conditions	STATUS	87
conditions	STATUS	86
conditions report	REPORTS	77
initialize	INITIALIZE	30-33
lockout count	OPTIONS	693
play limit	OPTIONS	694
Errors		
clear	STATUS	81
history		
report	REPORTS	76
status	STATUS	80
Factory pricing	PRICING	59
Free play		
Album	OPTIONS	6992
on days	PRICING	58
start time	PRICING	58
status on/off	PRICING	55
stop time	PRICING	58
timed on/off	PRICING	54
Initialize		
all discs (takes 30 minutes)	INITIALIZE	30
by disc number	INITIALIZE	31
cancel auto initialize	INITIALIZE	33
condition log	INITIALIZE	35
number of discs initialized	INITIALIZE	34
skip time (delay before cancel)	INITIALIZE	37
set track limit for a disc	INITIALIZE	32
skip count	INITIALIZE	36
Lockouts		
lockout (do not allow) a selection	OPTIONS	60
timed		
selections	OPTIONS	35
on days	OPTIONS	6991
start time	OPTIONS	6991
stop time	OPTIONS	6991
Messages		
message daily scheduler	MESSAGE CENTER	270
message date scheduler	MESSAGE CENTER	271
message editor	MESSAGE CENTER	272

Table 2-5. CD-100F Command Index

Continued

Function	Menu	Command
Modem		
modem password	MODEM	080
modem answer on	MODEM	081
modem answer off time	MODEM	082
modem # of rings to answer on	MODEM	083
modem enable	MODEM	084
Money		
keep on/off	OPTIONS	64
clear	AUDITS	14
Plays		
audit	PLAY AUDITS	110-117
clear	AUDITS	15
paid play style (sequential or random)	OPTIONS	690
free play style (sequential or random)	OPTIONS	691
paired selections	OPTIONS	6999
Phonograph commands		
clear		
selections after phonograph OFF 4-hours (on/off)	OPTIONS	68
selections after 4-hours OFF time	OPTIONS	692
credit	STATUS	82
errors	STATUS	81
display		
credit	STATUS	84
selections remaining	STATUS	85
# of power on/off cycles	STATUS	89
ID change	SECURITY	04
Popularity		
disk		
clear	AUDITS	13
least popular	AUDITS	18
most popular	AUDITS	17
report	REPORTS	72
selection		
clear	AUDITS	16
most popular	AUDITS	19
Popular Key		
popular key on/off	OPTIONS	6994

Table 2-5. CD-100F Command Index

Continued

Function	Menu	Command
Pricing		
bill values	PRICING	505-506
buy an album - on/off	OPTIONS	65
coin switch values	PRICING	501-504
price levels		
levels	PRICING	511-515
multiplier	PRICING	53
plays at price level	PRICING	521-525
premium plays (special pricing)	PRICING, OPTIONS	62, 6995
use factory (default) pricing	PRICING	59
Priorities		
enable priority plays on/off	OPTIONS	66
maximum tracks to play in a row	OPTIONS	67
play a specific selection	OPTIONS	61
Program with top door closed on/off	SECURITY	05
Remote		
autoplay override on/off	REMOTE	95
autoplay volume	REMOTE	97
credits	REMOTE	92
pause on/off	REMOTE	94
plays	REMOTE	99
selections on/off	REMOTE	91
pause time	REMOTE	94
Reports		
all audit	REPORTS	74
cancel	REPORTS	79
cash	REPORTS	70
disc conditions	REPORTS	77
error history	REPORTS	76
non resettables	REPORTS	73
play	REPORTS	71
popular	REPORTS	72
set up	REPORTS	75
baud rate	REPORTS	78
Security		
enter security code	SECURITY	00
level display	SECURITY	01
change level 2	SECURITY	02
change level 3	SECURITY	03
phono ID	SECURITY	04
security is on/off	SECURITY	06
Service switch enable - on/off	SECURITY	05

Table 2-5. CD-100F Command Index
Continued

Function	Menu	Command
Software level	STATUS	88
"Thank You" message on/off	OPTIONS	6993
Time and date change	INITIALIZE	38 and 39
Tracks in a row	OPTIONS	67
Versions	STATUS	88

PROGRAMMING AUTOPLAY, PREMIUMS, PRIORITIES, LOCKOUTS, AND PAIRS

Each of these seven options will allow programming specific selection or disc numbers into memory. The procedure is the same for all seven options.

Place the phonograph into the SERVICE mode and get to the * SERVICE MODE * display (hold RESET and press POPULAR as many times as necessary to display * SERVICE MODE *). Enter the command for the particular option to be programmed.

For Autoplay Programming

Type	Display shows
4	*AUTOPLAY*
5	PROGRAM 00 ----

For Autoplay Only Programming

Type	Display shows
69	* MORE OPTIONS 1 *
6	AP ONLY 00 ----

For Lockouts Programming

Type	Display shows
6	*OPTIONS*
0	LOCKOUTS 00----

For Timed Lockout Programming

Type	Display shows
699	* MORE OPTIONS 2 *
0	TIM LOCK 00 ----

For Priorities Programming

Type	Display Shows
6	*OPTIONS*
1	PRIORITY 00 ----

For Premiums Programming

Type	Display Shows
6	*OPTIONS*
2	PREMIUMS 00 ----

For Pairs Programming

Type	Display Shows
699	*MORE OPTIONS 2*
9	PAIRS SEL 00 ----

If a selection is not programmed for the displayed sequence number, four dashes will appear. When first received from the factory, none of these options will have any selections programmed. It is possible to program up to 100 autoplay selections or discs, 25 Autoplay only discs, 25 premium selections, 50 lockout selections, 10 priority selections, and 10 paired selections. The program sequence number will start at 00 and go to 1 less than the maximum possible programmed selections. For example, the sequence numbers for lockouts will start at 00 and go to 49.

All selections must be in consecutive sequence locations. You may not have a "hole" in the sequence. For example, premiums 00 is programmed to Selection 1305. The next premium selection must be entered in sequence location 01. The phonograph will not allow a hole to be left in the sequence.

AUTOPLAY PROGRAMMING MODES

When the Autoplay program sequence does not have any selections in it, Autoplay will select a random disk and track to play whenever the Autoplay time has elapsed. By entering selections into the sequence program, Autoplay will follow that sequence and play only those selections entered. The order of play will follow the sequence.

When entering a selection number ending in 00 (this is not normally a valid selection) in to the Autoplay sequence, Autoplay will select a random selection from that particular disk. For example, sequence number 04 has Selection 5200 programmed in. When Autoplay gets to sequence number 04 (the 5th Autoplay selection to be played), it will play a random track from disk 52.

Specific selection numbers and random selections on specific disks may be entered together and in any order in an Autoplay sequenced program.

LOCKOUT AND TIMED LOCKOUT MODES

To lockout a disc, enter the two-digit disc number followed by two zeroes. To lockout a selection, enter the four digit selection number.

If you are at Security Level 3 and have one of the four programming options on the display, you will notice the 1's digit of the sequence number will be blinking. The blinking digit indicates it may be changed. Type the sequence number where the new selection is to be entered then push POPULAR. If the sequence number entered would create a hole, the display will change to show the next available sequence number. The 1's digit in the selection number will now blink. Type in a four digit selection number (two digit disc number for Autoplay only), then press POPULAR to save it. The 1's digit in the sequence number will now blink allowing another sequence number to be entered.

If you try to enter a selection from a disk that has limits of 0 (the disk is not installed in the machine or it has not yet been initialized), the four dashes will reappear when POPULAR is pushed.

By holding RESET and pushing 3, the next sequence number and selection will be displayed. Holding RESET and pushing 2 will display the previous sequence number.

EDITING AUTOPLAY, PREMIUMS, PRIORITIES AND LOCKOUTS

To change a selection number, use RESET + 2 and RESET + 3 to scan the sequence looking for the selection to be changed. If the sequence number of the selection to be changed is known, simply type the sequence number. When the proper selection is displayed, push POPULAR to move the blinking digit to the 1's position of the selection number. Type in the new four digit selection number (a two-digit disc number for Autoplay only) then push POPULAR. If you try to enter a selection from a disk that has limits of 0 (the disk is not installed or not yet initialized), the original selection will be automatically reinserted when POPULAR is pushed.

To delete a selection number, locate that selection as described above. Push and hold RESET then push 4 once. The selection will be deleted. The next selection will be moved down into this sequence number to fill the hole the deletion would have left.

To add a selection in the middle of a list, locate the selection previous to selection you want to enter. Hold RESET and push 5 once. This will open a hole in the list. Type the new selection number then push POPULAR. If you try to enter a selection from a disk that has limits of 0 (the disk is not installed in the machine or it has not yet been initialized), selection 0001 will be inserted automatically.

TIMED FREE PLAY AND TIMED LOCKOUT SCHEDULING TUTORIAL

What Multiple Lockout On/Off Times Do

Multiple lockout On/Off times allow you to lockout (prevent selecting or playing) specific selections or discs up to three times a day each day of the week. Selections or discs to be locked-out are entered in OPTION 6990 (TIMLOCK). Scheduling and entering the times is done in the same manner as MULTIPLE FREEPLAY ON/OFF times (*refer to the Timed Free Play example*).

What Multiple Freeplay On/Off Times Do

Multiple Freeplay ON/OFF Times allow you to stimulate interest in the phonograph by offering free plays at up to three times a day each day of the week. Note that this feature only schedules the Freeplay times. To allow Freeplay, you must be sure to turn the TIMED FPLAY (Command 54) ON before Freeplay will be enabled.

See table 2-5 for Commands 54, 55, and 58.

If FREE PLAY STATUS is ON, the phonograph will be on Free Play. If FREE PLAY STATUS is OFF, the phonograph will not be on FREE PLAY.

Free Play status will always be turned OFF when a STOP time and day matches the time and day on the "Real-Time Clock", and timed Free Play is set to ON.

Free Play status will only turn ON when the START time and day matches the time and day of the real-time clock, and timed Free Play is set to ON.

When timed Free Play is set to OFF, the system will not turn Free Play status ON or OFF.

1. Turn Timed Freeplay On

Example: The example shown in *Figure 2-11* shows The Multiple Freeplay On/Off Times sheet filled out for Sunday and Monday. To make keying the schedule in easier, use this form to make your plans, then key in the schedule (Photocopy the original of this form, which is in the back of this section).

MULTIPLE FREEPLAY ON/OFF TIMES

Fill in the START times, STOP times, and the COMMENTS before you make the actual scheduling changes.

Sunday	On	Off	Comment
1	10 : 00	10 : 30	One Freeplay Period
2	__ : __	__ : __	
3	__ : __	__ : __	

Monday	On	Off	Comment
1	11 : 15	11 : 30	Two Freeplay Periods
2	14 : 30	14 : 45	
3	__ : __	__ : __	

Tuesday	On	Off	Comment
1	__ : __	__ : __	No Freeplay Scheduled
2	__ : __	__ : __	
3	__ : __	__ : __	

Figure 2-11. Sample Freeplay Schedule

2. Plan The Schedule

Scheduling Freeplay is simple, just remember these rules:

SCHEDULING RULES

The schedule must have one ON time and a corresponding OFF time for each scheduled time. These times must follow these simple restrictions:

Examples:

Monday	ON	OFF	**Wrong** - The OFF time is set before the ON time.
1	10:30	10:00	The ON time must be earlier than the corresponding OFF time.
Monday	ON	OFF	**Wrong** - A gap was left in the schedule.
1	10:00	--:--	Gaps are not allowed.
2	11:00	11:30	
Monday	ON	OFF	**Wrong** - No OFF time was scheduled.
1	15:00	--:--	Each scheduled Freeplay time must have
2	--:--	--:--	an ON time and an OFF time.
Monday	ON	OFF	**Right** - The proper times were entered and
1	10:00	10:30	the schedule is complete.
2	11:00	11:30	

3. Enter The Schedule

If you have not verified that Timed Freeplay is ON, go back to the previous topics and check the Freeplay status before you make or change the Freeplay Schedule.

A. From the * SERVICE MODE * display, enter 58 to display Line 8 of the Pricing Menu. This line will show: FREE SCH SMTWTFS with the first "S" (Sunday) in the calendar blinking[1].

B. Move the cursor to another day by pressing either RESET +2 or by pressing RESET +3.

C. Move the cursor back to Monday and press POPULAR to view Monday's schedule.

D. At this time the display shows MON-1 ON --:-- and the 1's digit of the hours field is blinking[2]. The MON-1 on the display indicates that this schedule entry is the first Monday ON time. Enter the first Monday ON time hour from the sample schedule *(see Figure 2-11)* by entering the ON time hour and then pressing POPULAR. Enter the minutes in the same way and then press POPULAR.

E. To move to the first OFF time for Monday, press RESET +3, enter the OFF time, and press POPULAR.

F. Press RESET +3 to advance to second OFF time. Enter OFF Time and then press POPULAR.

G. Press RESET +9 to move back to the FREE SCH display.

[1] Any blinking letter or number represents the "cursor", which is the pointer that indicates what information will be changed if you make an entry.

[2] A field is a space to enter or display numbers or letters.

4. Copy The Schedule

Now to program the phonograph for the rest of the week. You can copy the schedule you just made into any/all of the remaining days of the week. To make the schedule for Tuesday through Friday the same as Monday:

A. Move the cursor until the M for Monday is blinking.

B. Press RESET +8 and the display will show: CPY MO -> S

C. Press RESET +2 and RESET +3 until MTWTF appears on the display. MTWTF on the display indicates that Monday's schedule will be copied into the Monday through Friday schedules.

D. Press POPULAR to perform the copy.

ROWE PHONOGRAPH MESSAGE CENTER

The **Rowe Message Center** allows you to program messages to play for any desired date and time. Up to eight different messages may be used, with three programmable ON/OFF times for each day of the week.

Getting into message program menu:

1. Move the NORM/SERV switch to the SERVICE position. The display shows SERVICE MODE.

2. By entering 2 7 on the keyboard the display advances to the MESSAGE CENTER.

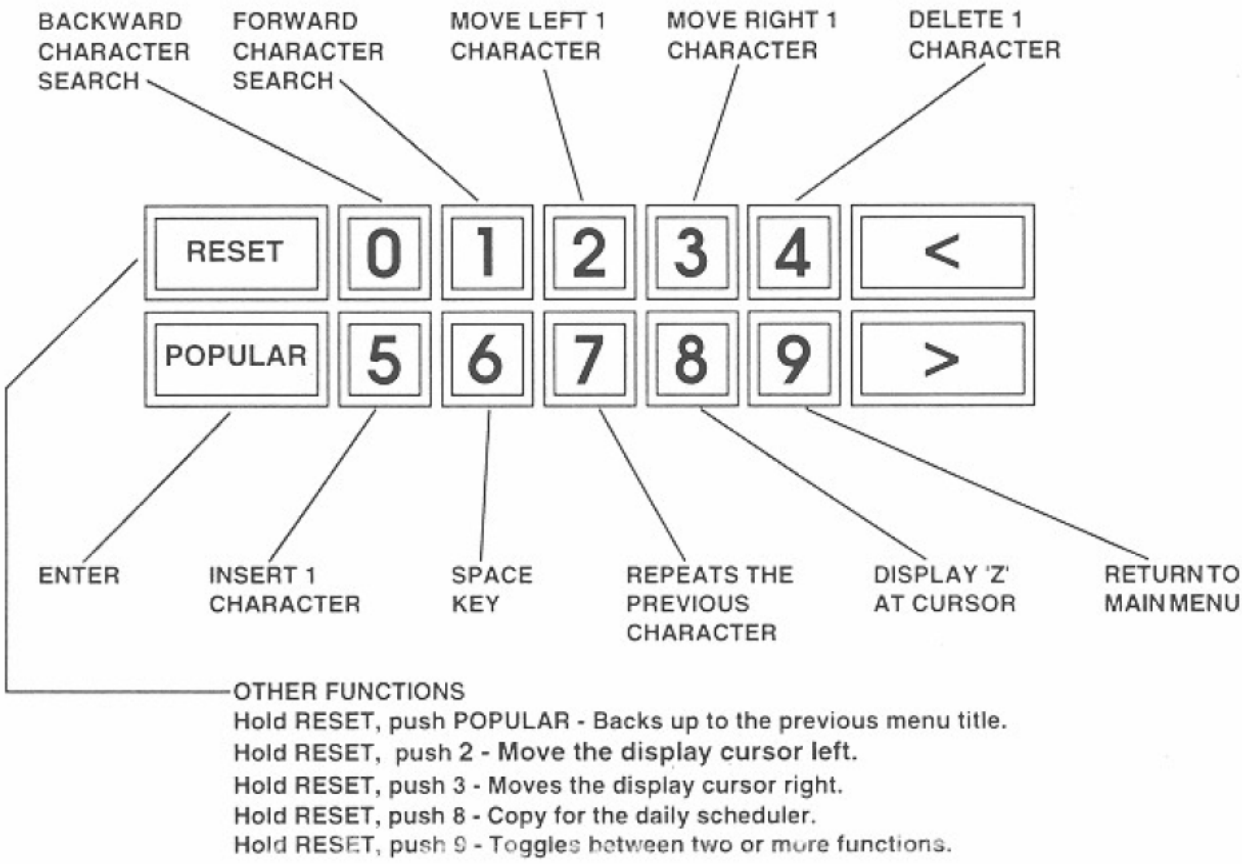

Message Programming Keys

Selecting Characters

The following is a list of available characters in order of appearance in the message programming menu. Note that the cursor begins at a "space" and can be moved either left (by Pushing key 0) to the number 9, or right (by Pushing the 1 key) to the letter A (If key 8 is pushed, the cursor begins at letter Z).

[\ ] _ @ : ; (=) ? ! " # $ % & ' < > * + - /

0 1 2 3 4 5 6 7 8 9 space A through Z

Character Map

NOTE:

Before pushing the key shown in sections AA, BB, or CC, the display must show MESSAGE CENTER. If it doesn't, hold reset and repeatedly push the POPULAR key until the display shows SERVICE MODE. Enter 2 7. MESSAGE CENTER is now being displayed. Also, if you make a mistake or have a problem in a menu, use this procedure to start over.

Note #1.

AA. Inserting or Changing Messages: Push 2 (see NOTE #1)

When the desired item is flashing, push popular to execute. Hold RESET and repeatedly push 3 to select item.

1. The display screen reads MSG 1 EDT DEL VU.
   - MSG 1- Selects a message (from number 1-8) to edit.
   - EDT- Allows you to enter or change the selected message.
   - DEL- Deletes the selected message from memory (you must push POPULAR three times to delete a message).
   - VU- Displays the selected message.

EXAMPLE FOR PROGRAMMING A NEW MESSAGE

When this example is complete, the display will read HELLO TOM as message number three.

A. Follow step **AA** to obtain MSG 1 EDT DEL VU.
B. Push key 3 to edit message three. Push POPULAR.
C. Push popular to go to the edit screen.
D. Display should be blank except the cursor flashing at digit eight *(See Table 2-6)*.
E. Push key 1 until the display shows H. Push POPULAR (cursor points to the next character).
F. Push key 1 until the display shows E. Push POPULAR.
G. Push key 1 until display shows L. Press POPULAR.
H. Push key 7. Display shows L. Press POPULAR.
I. Push key 7. Display shows L. Then push key 1 until the display shows O. Press POPULAR.
J. Push POPULAR. Display shows a "space".
K. Push key 1 until display shows T. Push POPULAR.
L. Push key 7. Display shows T. Then push key 0 until display shows O. Push POPULAR.
M. Push key 7. Display shows O. Then push key 0 until display shows M. Push POPULAR.
N. Press the key 9 to exit and save the message.

Table 2-6. Example Message Program Sequence Display

	1	2	3	4	5	6	7	8	9	10	11	12	13	14	15	16
A	M	S	G		1		E	D	T		D	E	L		V	U
B	M	S	G		3		E	D	T		D	E	L		V	U
C								_								
D							H	_								
E						H	E	_								
F					H	E	L	_								
G				H	E	L	L	_								
H			H	E	L	L	O	_								
I		H	E	L	L	O		_								
J	H	E	L	L	O		T	_								
K	E	L	L	O		T	O	_								
L	L	L	O		T	O	M	_								
M	M	S	G		3		E	D	T		D	E	L		V	U

Example for correcting or editing an existing message

When the example is complete, the display will read TOPS IN MUSICLAND for message 6. Previously, this message displayed TOYS FOR TOTS. Note- all editing keys will be used to show their effect on the message.

A. Follow step **AA** to obtain the display MSG 1 EDT DEL VU *(See Table 2-7).*
B. Press 6 to edit message 6, push POPULAR.
C. Push popular to go to the edit screen.
Display characters 1-7 are blank. Character 8 is a flashing T. Characters 9-16 are characters OYS FOR.
D. Push key 3 twice. The Y should be flashing. Push key 0 until the flashing digit is a P. Push POPULAR.
E. Push key 3 twice. The F should be flashing. Push key 1 until the digit is an I. Push POPULAR.
F. The O is flashing. Push key 0 once. The digit is an N. Push POPULAR.
G. The R is flashing. Push key 6. The digit is now a "space." Push POPULAR.
H. The cursor is flashing. Push key 1 until M is displayed. Push POPULAR.
I. The T is flashing. Push Key 1 once. The digit is now a U. Push POPULAR.
J. The O is flashing. Push key 5. The display shows a space inserted between the U and 0. Push key 1 until the digit is an S. Push POPULAR.
K. The O is flashing. Push the 0 until the digit is an I. Press POPULAR.
L. The T is flashing. Push key 4. The display shows that the T was removed. Push key 1 until the C is displayed. Push POPULAR.
M. Push key 1 until the L is displayed. Push POPULAR
N. Push key 1 until the A is displayed. Push POPULAR
O. Push key 1 until the N is displayed. Push POPULAR
P. Push key 1 until the D is displayed. Push POPULAR
Q. Push key 9 to exit and save the message.

Table 2-7. Example Message Edit Display

	1	2	3	4	5	6	7	8	9	10	11	12	13	14	15	16
A	M	S	G		1		D	E	L		E	D	T		V	U
B	M	S	G		6		E	D	T		D	E	L		V	U
C									O	Y	S		F	O	R	
D					T	O	P	S		F	O	R		T	O	T
E		T	O	P	S		I	O	R		T	O	T	S		
F	T	O	P	S		I	N	R		T	O	T	S			
G	O	P	S		I	N		_	T	O	T	S				
H	P	S		I	N		M	T	O	T	S					
I	S		I	N		M	U	O	T	S						
J1	S		I	N		M	U	_	O	T	S					
J2		I	N		M	U	S	O	T	S						
K	I	N		M	U	S	I	T	S							
L1	I	N		M	U	S	I	S								
L2	N		M	U	U	I	C	_								
M			U	S	I	C	L	_								
N	M		S	I	C	L	A	_								
O	U		I	C	L	A	N	_								
P	S		C	L	A	N	D	_								
Q	M		G		6		E	D	T		D				V	U

BB. Setting the daily message display time(s): Push 0. (See Note #1 on Page 2-56)

When you initially program a message, you must activate the daily message display timer for that message. This section discusses how to program messages to play at any given time of day, for the week.

There are three available ON/OFF time settings for each day. There are also ON/OFF settings for each day of the week.

The display screen reads MSG SCH SMTWTFS.

- MSG SCH means that you are in the MESSAGE SCHEDULE MENU. This menu allows daily message plays.
- SMTWTFS- Selects the day (from Sunday to Saturday) to play messages.

A. Turning a message ON or OFF for a day of the week.
   1. Hold RESET and repeatedly push the 2 or 3 key to move the cursor to the day you wish to play a message. Release the RESET key and push POPULAR to enter the play menu for the day you have chosen.
   2. Push the message number(s) that you wish to display for the selected day. (If the message number is displayed, the message will be activated if the time ON/OFF is set. If the message number is blanked, that message will not be displayed). Push POPULAR to save your program settings.

B. Setting the time of day to play a message (three available ON/OFF time settings per day).
   1. Hold RESET and push 3 to enter the TIME ON menu. Release the RESET key.
   2. Determine the time you would like the message to begin playing. Enter the hour and push POPULAR. Enter the minutes and press POPULAR. Hold RESET and push 3 to move to the TIME OFF menu for the selected message. Release the RESET key.
   3. Determine the time you would like the message to turn off. Enter the hour and press POPULAR. Enter the minutes and press POPULAR.
   4. If additional TIME ON/OFF for this day is required, hold RESET and push 3, then release the RESET key. Go back to step A-2, and through step B1-4.
   5. When the daily message schedule has been completed for one day, the schedule may then be copied to the other six days by following this procedure:

      Hold RESET, push 9 to return to display - MSG SCH SMTWTFS
      The letter which is flashing should be the day you have just completed setting up the times for.
      Hold RESET, push 8. The display reads CPY XX* -> S.

      To copy the date to the remaining six days, push and hold RESET and push key 3 until the display shows CPY XX*-> SMTWTFS. Release RESET, then push POPULAR.

   * XX denotes the day ON/OFF times that have been entered.

Example for setting up the message daily timer

When this example is completed, message 4 will display every day from 12:00 (00:00) midnight until 11:59 (23:59) PM *(See Table 2-8 for Display Example).*

A. Follow step BB to obtain display MSG SCH SMTWTFS.
B. Hold reset, push 3 once. The M is now flashing. Release RESET.
C. Push POPULAR.
D. Push key 4.
E. Push POPULAR. Hold RESET and push key 3. Release RESET.
F. Type 00 for the ON hour and push POPULAR.
G. Type 00 for the ON minute and push POPULAR.
H. Hold RESET and push key 3. Release RESET.
I. Type 23 for the OFF hour and push POPULAR.
J. Type 59 for the OFF minute and push POPULAR.
K. Hold RESET, push 9. The M should be flashing.
L. Hold RESET and push key 8 (copy command).
M. Hold RESET, repeatedly push key 3 until SMTWTFS is displayed. Release RESET. Push POPULAR.

Table 2-8. Example Message Daily Timer Display

	1	2	3	4	5	6	7	8	9	10	11	12	13	14	15	16
A		M	S	G		S	C	H		S	M	T	W	T	F	S
B		M	S	G		S	C	H		S	M	T	W	T	F	S
C	M	O	N	-	1				-	-	-	-	-	-	-	-
D	M	O	N	-	1				-	-	-	4	-	-	-	-
E	M	O	N	-	1				O	N		-	-	:	-	-
F	M	O	N	-	1				O	N		0	0	:	0	0
G	M	O	N	-	1				O	N		0	0	:	0	0
H	M	O	N	-	1			O	F	F		-	0	:	-	-
I	M	O	N	-	1			O	F	F		2	3	:	0	0
J	M	O	N	-	1			O	F	F		2	3	:	5	9
K		M	S	G		S	C	H		S	M	T	W	T	F	S
L	C	P	Y		M	O	-	>		S	_					
M	C	P	Y		M	O	-	>		S	M	T	W	T	F	S

Setting The Master ON/OFF Date: Push 1 (See Note #1 on Page 2-56)

Messages 1-8 can play every day unless they are changed in the MASTER ON/OFF DATE menu. By scheduling messages to play on specific dates, you may tailor messages (such as "HAPPY BIRTHDAY JOE") to play on special dates.

The display screen reads 1 ON 01 01 1997.
This means message "1" is set to begin playing on January 1, 1997.

A. Setting the ON time for a message.
   1. The message number should be flashing. Type the message number that you desire to create an ON/OFF date for and push POPULAR.
   2. Enter the two digit month the message is to play and push POPULAR.
   3. Enter the two digit day the message is to play and push POPULAR.
   4. Enter the four digit year the message is to play and push POPULAR.

B. Setting the OFF time for the message. Hold RESET, push 3, then release RESET.
   1. The display now reads M* OFF 12 30 2050. Push POPULAR (this menu turns the message OFF for the selected date and beyond. M* should be the message number you created the ON date for).
   2. Enter the two digit month the message is to stop playing and push POPULAR to save. Enter the two digit day the message is to stop playing and push POPULAR to save. Enter the four digit year the message is to stop playing and push POPULAR to save.

ENHANCED AUTOPLAY TUTORIAL

Autoplay

The Autoplay feature stimulates customer interest in the phonograph by periodically playing selections. The Autoplay feature is factory preset to STD and plays one track after the phonograph has been idle for 20 minutes. This feature may be programmed for any length of time between 0 and 255 minutes. Selections may be played in a specific sequence.

Differences Between Standard And Enhanced Autoplay

Enhanced Autoplay lets you categorize the discs (for example: Popular, Country, Rock, etc.). Up to eight categories can be assigned and selected up to 20 different times of the day, each day of the week. Standard Autoplay cannot assign categories, has one ON/OFF time, and lets you select which days of the week Autoplay is active. Enhanced Autoplay programming is more involved, so Standard Autoplay should be used unless categories, multiple ON/OFF times, or different ON/OFF times for different days are needed.

SETTING UP ENHANCED AUTOPLAY

1. Set COMMAND 40, AUTOPLAY IS, to: ENH (COMMAND 41, DELAY, is not used in Enhanced Autoplay).

2. Set COMMAND 42, START TIME, to: 00:00 (this is the factory setting).

3. Set COMMAND 43, STOP TIME, to 23:59 (this is the factory setting).

4. Set COMMAND 44, ON DAYS, to SMTWTFS (this is the factory setting).

5. COMMAND 45, PROGRAMMED AUTOPLAY - Programming is optional. Use Programmed Autoplay only if you want to play specific selections or play discs in a specific order. If Programmed Autoplay is used, it plays only those selections and discs that are listed in the play list and the discs' categories are selected (the category must be active and the selection must be on the play list before the selection will play).

   Enhanced Autoplay looks at the selected categories first, then determines which discs may be played. If one of the allowed category numbers matches a disc category number in the play list, that selection is played. When you use a play list, be sure that the programmed schedule (COMMAND 49) and the disc categories (COMMAND 48), and the Programmed Autoplay selections (discs) are properly assigned, or Enhanced Autoplay will not play the selections from the play list (see *Programming Autoplay, Premiums, Priorities, and Lockouts* for information on how to program the play list).

NOTE:

COMMAND 46, CLEAR PROGRAMMED, clears all programmed selections entered in COMMAND 45.

6. Set COMMAND 47, AUTOPLAY STATUS, to: ON.

7. COMMAND 48 and 49. See *Setting Up Enhanced Autoplay Schedules* on the following pages.

Setting Up Enhanced Autoplay Schedules (Commands 48 And 49)

Enhanced Autoplay provides up to 20 events each day of the week for a total of 140 events per week. Before you begin entering specifics for these events, some preliminary work must be done. If you take the time to do this work now, you will find that planning, entering, and changing the Autoplay schedule will be much easier.

The five major tasks to perform are:

1. Assigning a category number or numbers to each disc installed in the phonograph using the Disc Category List worksheet as shown in *Figure 2-12 (Pg. 2-69)*, and use the Worksheet Masters at the end of this section for the actual masters.

2. Entering the disc category list into the phonograph.

3. Developing the Autoplay Event Schedule using the Autoplay Event Schedule Worksheet.

4. Entering the Autoplay Event Schedule into the phonograph.

5. Copy a schedule to the other days of the week.

FOLLOW STEPS 1 THROUGH 5 TO SET UP AN ENHANCED AUTOPLAY SCHEDULE

1. Set Up The Categories

Categories should be assigned if you want to take full advantage of Enhanced Autoplay's ability to select specific kinds of music.

Autoplay sees the eight categories as Category 1 through 8 (All 100 discs are assigned to Category 1 at the factory). To make setting up Autoplay easier, you should assign names to each category. We have supplied a general purpose form to help you assign category numbers and discs. A general purpose category assignment would look like *Figure 2-12*.

Once you have decided what title to use for each category (you do not have to assign a name for each category if you do not have eight categories), you should determine the category (or categories) for each disc. *Figure 2-12* also shows a sample category list for a phonograph with 50 discs. Note that some discs fit into more than one category. This means that Autoplay can select these discs if any one of the categories is scheduled. You can assign a disc to all eight categories, but depending on the category titles, some category titles may exclude each other (it's not likely that a Country & Western disc would be assigned to Urban as well).

You can enter the categories as you look at the title pages on a CD-100F Phonograph.

Photocopy the Disc Category List at the back of this section and use the copy for a work sheet.

2. Make The Category Entries

KEY FUNCTIONS

Some key combinations have slightly different meanings in the Autoplay menus. *Table 2-9* shows what these key combinations do in the Schedule (display shows: SCHEDULE SMTWTFS) and in the Set Time (SU 01 TIME) modes.

Table 2-9. Key Functions

Key Combination	Function In SCHEDULE SMTWTFS	Function In SU 01 TIME --:--
RESET +2	Moves the cursor to the left one day	Decrements the event number
RESET +3	Moves the cursor to the right one day	Increments the event number
RESET +4	No function	Deletes the current event and moves all events down one line
RESET +5	No function	Inserts a blank entry at this event number and pushes all other events up one line
RESET +6	No function	No function
RESET +7	No function	Toggles the negative sign in VOL1 and VOL2
RESET +8	Starts the copy function	No function
RESET +9	Enters the indicated day's program	Advances to the next programmable field
POPULAR	Enters the indicated day's program	Stores the displayed data in the displayed field

Use the DISC mode to enter a disc number. Switch to CATEGORY mode to change the categories assigned to the disc selected in the DISC mode.

A. Enter the SERVICE mode.

B. Enter 48 to access the Autoplay Category menu.

The display will initially show: =00 CAT 1--------

- The = sign to the left of the 00 indicates that the disc number will be changed (DISC mode) rather than changing the categories assigned (CATEGORY mode).
- The 00 indicates the disc number
- The 1-------- indicates that disc 00 is only assigned to Category 1

USING RESET +9 IN THE CATEGORY MENU

RESET +9 toggles between DISC mode and CATEGORY mode.

DISC MODE

DISC mode (the = sign is ahead of the disc number) only allows you to change the disc number that is displayed. Use this mode to change the disc number easily. This mode is particularly useful if you are changing or checking categories for a wide range of disc numbers.

Example: You want to view the categories assigned to Discs 15, 45, and 87. If you enter 15, you will see the categories assigned to Disc 15. Enter 45 and you will see the categories assigned to Disc 45. Enter 87 and the display shows the categories assigned to Disc 87.

In DISC mode, the following keys have these functions:

Key Combination	Function
RESET +2	Decrements the disc number by one disc
RESET +3	Increments the disc number by one disc
POPULAR	Changes to CATEGORY mode (not a toggle function)
Number Keys	Numbers entered become the new disc numbers. The new categories are displayed as each digit of the new disc is entered.

C. Select the disc number that you wish to assign categories.

CATEGORY MODE

CATEGORY mode (the = sign is ahead of the category numbers) allows you to change the category numbers assigned to a disc.

In CATEGORY mode, the following keys have these functions:

Key Combination	Function
RESET +2	Decrements the disc number by one disc
RESET +3	Increments the disc number by one disc
POPULAR	Saves any changes made to the category list and increments the disc number by one disc
Number Keys	Toggle the corresponding categories ON and OFF.

D. Press RESET +9 to switch to CATEGORY mode.

E. Enter the numbers (1 through 8) that correspond to the categories that you wish to assign to the disc. The number keys will alternately turn the category numbers ON and OFF.

3. Plan The Schedule

The schedule determines on which day and at what time of day that Autoplay categories are allowed to play (this is called an event).

If the phonograph has the optional volume control module installed, the schedule can adjust the phonograph's volume at the beginning of each event.

The schedule is composed of five parts (seven parts if you include the optional volume control feature). Each of these schedule parts are discussed in the paragraphs that follow.

DAY OF THE WEEK

The time and date are set at the factory (they can be changed if needed). The factory-set time is Eastern Standard Time.

The Central Control Computer (CCC) uses the time and initial date to determine the day of the week by using its own internal calendar.

If you wish, you may schedule all seven days of the week.

EVENT

An event is space in the schedule where a schedule change is made. Each of the days of the week can have up to 20 events scheduled.

TIME

You must supply a time in the schedule to start Enhanced Autoplay. This time is the exact time that you want Autoplay to be allowed to check for an idle phonograph. The actual first Autoplay selection will only play after the delay time *(See Delay).*

CATEGORIES

All, some, or none of the eight categories can be selected for each event. Select the category (or categories) that you want to have played when the phonograph makes an Autoplay selection. Autoplay will make its selection from the lowest selected category. If you supply a play list (play lists are discussed next), Autoplay will pick a play list selection that is in the selected category.

DELAY

Delay is the time that Autoplay waits to make a selection after the customer selection is played (is scanned out).

CHANNEL 1 AND CHANNEL 2 VOLUME (Optional)

VOL1 and VOL2 are single digit numbers (0 through 9 and -1 through -9) that cause the phonograph's volume to change in Channel 1 and in Channel 2. This volume change is relative to the volume set by the phonograph's volume control. A volume of 0 means use the phonograph volume control's volume setting. A setting of 1 means boost the volume slightly and a setting of -1 means reduce the volume slightly. A value of 9 is the maximum volume boost and a value of -9 is the maximum volume reduction.

Working Example of Enhanced Autoplay

PAUL'S AUTOPLAY SCHEDULE

Paul wants his Rowe Jukebox to automatically play music at certain times of the day. Paul wants to have the music played every day in the following format:

- Easy Listening, at a reduced volume level, for breakfast from 6:30 to 7:30 am with a one minute delay between Autoplay selections.
- Top 40 and oldies from 2:00 pm to 4:00 pm with a three minute delay between Autoplay selections.
- Specials (certain Top 40 discs) from 4:00 to 7:00 pm with a five minute delay between Autoplay selections.
- All types of music from 7:00 pm to 9:00 pm with an increased volume level.

To accomplish this format, Paul will use Enhanced Autoplay to give the phonograph the exact music style that he desires.

HOW PAUL SET UP ENHANCED AUTOPLAY

1. Paul reads the tutorial carefully and begins to install Enhanced Autoplay by planning his work first.
2. Paul fills out the Disc Category List *(See Figure 2-12)*.

DISC CATEGORY LIST

Date _____ Location _____

Name each of the eight categories and then assign the discs to each category.

Category #	Category Name	Category #	Category Name
1		5	
2		6	
3		7	
4		8	

Place an X on the category that you wish to assign to each disc.

00	1	2	3	4	5	6	7	8	50	1	2	3	4	5	6	7	8
01	1	2	3	4	5	6	7	8	51	1	2	3	4	5	6	7	8
02	1	2	3	4	5	6	7	8	52	1	2	3	4	5	6	7	8
03	1	2	3	4	5	6	7	8	53	1	2	3	4	5	6	7	8
04	1	2	3	4	5	6	7	8	54	1	2	3	4	5	6	7	8
05	1	2	3	4	5	6	7	8	55	1	2	3	4	5	6	7	8
06	1	2	3	4	5	6	7	8	56	1	2	3	4	5	6	7	8
07	1	2	3	4	5	6	7	8	57	1	2	3	4	5	6	7	8
08	1	2	3	4	5	6	7	8	58	1	2	3	4	5	6	7	8
09	1	2	3	4	5	6	7	8	59	1	2	3	4	5	6	7	8
10	1	2	3	4	5	6	7	8	60	1	2	3	4	5	6	7	8
11	1	2	3	4	5	6	7	8	61	1	2	3	4	5	6	7	8
12	1	2	3	4	5	6	7	8	62	1	2	3	4	5	6	7	8
13	1	2	3	4	5	6	7	8	63	1	2	3	4	5	6	7	8
14	1	2	3	4	5	6	7	8	64	1	2	3	4	5	6	7	8
15	1	2	3	4	5	6	7	8	65	1	2	3	4	5	6	7	8
16	1	2	3	4	5	6	7	8	66	1	2	3	4	5	6	7	8
17	1	2	3	4	5	6	7	8	67	1	2	3	4	5	6	7	8
18	1	2	3	4	5	6	7	8	68	1	2	3	4	5	6	7	8
19	1	2	3	4	5	6	7	8	69	1	2	3	4	5	6	7	8
20	1	2	3	4	5	6	7	8	70	1	2	3	4	5	6	7	8
21	1	2	3	4	5	6	7	8	71	1	2	3	4	5	6	7	8
22	1	2	3	4	5	6	7	8	72	1	2	3	4	5	6	7	8
23	1	2	3	4	5	6	7	8	73	1	2	3	4	5	6	7	8
24	1	2	3	4	5	6	7	8	74	1	2	3	4	5	6	7	8
25	1	2	3	4	5	6	7	8	75	1	2	3	4	5	6	7	8
26	1	2	3	4	5	6	7	8	76	1	2	3	4	5	6	7	8
27	1	2	3	4	5	6	7	8	77	1	2	3	4	5	6	7	8
28	1	2	3	4	5	6	7	8	78	1	2	3	4	5	6	7	8
29	1	2	3	4	5	6	7	8	79	1	2	3	4	5	6	7	8
30	1	2	3	4	5	6	7	8	80	1	2	3	4	5	6	7	8
31	1	2	3	4	5	6	7	8	81	1	2	3	4	5	6	7	8
32	1	2	3	4	5	6	7	8	82	1	2	3	4	5	6	7	8
33	1	2	3	4	5	6	7	8	83	1	2	3	4	5	6	7	8
34	1	2	3	4	5	6	7	8	84	1	2	3	4	5	6	7	8
35	1	2	3	4	5	6	7	8	85	1	2	3	4	5	6	7	8
36	1	2	3	4	5	6	7	8	86	1	2	3	4	5	6	7	8
37	1	2	3	4	5	6	7	8	87	1	2	3	4	5	6	7	8
38	1	2	3	4	5	6	7	8	88	1	2	3	4	5	6	7	8
39	1	2	3	4	5	6	7	8	89	1	2	3	4	5	6	7	8
40	1	2	3	4	5	6	7	8	90	1	2	3	4	5	6	7	8
41	1	2	3	4	5	6	7	8	91	1	2	3	4	5	6	7	8
42	1	2	3	4	5	6	7	8	92	1	2	3	4	5	6	7	8
43	1	2	3	4	5	6	7	8	93	1	2	3	4	5	6	7	8
44	1	2	3	4	5	6	7	8	94	1	2	3	4	5	6	7	8
45	1	2	3	4	5	6	7	8	95	1	2	3	4	5	6	7	8
46	1	2	3	4	5	6	7	8	96	1	2	3	4	5	6	7	8
47	1	2	3	4	5	6	7	8	97	1	2	3	4	5	6	7	8
48	1	2	3	4	5	6	7	8	98	1	2	3	4	5	6	7	8
49	1	2	3	4	5	6	7	8	99	1	2	3	4	5	6	7	8

Figure 2-12. Sample Disc Category List

3. Paul then enters the information shown in *Figure 2-12* in the following sequence:

   A. Paul enters the SERVICE mode. The list that follows shows what keys he presses and displays what he sees after he presses the keys.

   B. The Steps:

Step #	Keystroke	Display
1	COMMAND 40	AUTOPLAY IS STD
2	RESET +9	AUTOPLAY IS ENH
3	POPULAR	
4	RESET + POPULAR	*AUTOPLAY*
5	RESET + POPULAR	SERVICE MODE
6	COMMAND 48	=00 CAT 1-------
7	RESET +9	00 CAT=1-------
8	Press Key 2, Press Key 4	00 CAT=12-4-------
9	POPULAR	01 CAT=1-------
10	Press Key 3	01 CAT=1-3-------
11	POPULAR	02 CAT=1-------

Paul repeats Steps 8, 9, 10, and 11 to assign all discs according to the Disc Category List. In Step 8 and 10, he presses the necessary keys (1-8) to delete (unassigned categories display as a dash) and assign (assigned categories display as the category number) the categories. When he finishes, Paul will have assigned categories to 50 of the 100 discs possible (some discs will have been assigned to multiple categories).

Note that the factory has assigned all discs to Category 1, and Paul may choose to turn Category 1 OFF while he assigns categories (in *Figure 2-12*, Category 1 is not marked with any "X"'s because the factory has already assigned Category 1 to all discs.

   C. Next, Paul fills out the Autoplay Schedule according to his schedule *(See Figure 2-13)*.

AUTOPLAY SCHEDULE

Location: *Paul's Restaurant* **Date:** *6-8-95*

Fill in the Autoplay event times, delay times, categories, and volume changes before you make the actual scheduling changes.

Day: *SMTWTFS*

Event	Time	Categories	Delay	Vol 1	Vol 2
1	6 : 30	3	1	-3	-3
2	7 : 30	------	0	0	0
3	14 : 00	2, 6	3	0	0
4	16 : 00	4	5	0	0
5	19 : 00	1	0	+3	+3
6	21 : 00	------	0	0	-3

Figure 2-13. Sample Autoplay Schedule

D. Paul now enters the SERVICE mode and begins to make the entries. The steps are:

Step #	Keystroke	Display
1	COMMAND 49	SCHEDULE SMTWTFS
2	POPULAR	SU 01 TIME --:--
3	Press Keys 0, 6, POPULAR, 3, 0, POPULAR	SU 01 TIME 06:30
4	PRESS RESET +9	SU 01 [--------]
5	Press Keys 3, POPULAR	SU 01 [--3-----]
6	Press RESET +9	SU 01 DELAY 00
7	Press Keys 1, POPULAR	SU 01 DELAY 01
8	Press RESET +9	SU 01 VOL CH10
9	Press RESET +7, 3, POPULAR	SU 01 COL CH1 -3
10	Press RESET +9	SU 01 VOL CH2 0
11	POPULAR	SU 01 VOL CH2 -3
12	Press RESET +9	SU 01 TIME O6:30
13	Press RESET +3	SU 02 TIME --:--

Step #	Keystroke	Display
14	Press Keys 0, 7, POPULAR, 3, 0, POPULAR	SU 02 TIME 7:30
15	Press RESET +9	SU 02 [--------]
16	Press RESET +9	SU 02 DELAY 00
17	Press RESET +9	SU 02 VOL CH1 0
18	Press RESET +9	SU 02 VOL CH2 0
19	Press RESET +9	SU 02 TIME 7:30
20	Press RESET +3	SU 03 TIME --:--
21	Press Keys 1, 4, POPULAR, POPULAR	SU 03 TIME 14:00
22	Press RESET +9	SU 03 [--------]
23	Press Keys 2, 6, and then POPULAR	SU 03 [-2---6--]
24	Press RESET +9	SU 03 DELAY 00
25	Press 3 POPULAR	SU 03 DELAY 3
26	Press RESET +9	SU 03 VOL CH 1 0
27	Press RESET +9	SU 03 VOL CH2 0
28	Press RESET +9	SU 03 TIME 14:00
29	Press RESET +3	SU 04 TIME --:--
30	Press Keys 1, 6, POPULAR, POPULAR	SU 04 TIME 16:00
31	Press RESET +9	SU 04 [--------]
32	Press Keys 4, POPULAR	SU 04 [---4----]
33	Press RESET +9	SU 04 DELAY 00
34	Press Keys 5, POPULAR	SU 04 DELAY 05
35	Press RESET +9	SU 04 VOL CH 1 0
36	Press RESET +9	SU 04 VOL CH2 0
37	Press RESET +9	SU 04 TIME 16:00
38	Press RESET +3	SU 05 TIME --:--
39	Press Keys 1, 9, POPULAR, POPULAR	SU 05 TIME 19:00
40	Press RESET +9	SU 05 [--------]
41	Press Key 1 then POPULAR	SU 05 [1-------]
42	Press RESET +9	SU 05 DELAY 00

Step #	Keystroke	Display
43	Press RESET +9	SU 05 VOL CH1 0
44	Press Keys 3, POPULAR	SU 05 VOL CH1 3
45	Press RESET +9	SU 05 VOL CH2 0
46	Press Keys 3, POPULAR	SU 05 VOL CH2 3
47	Press RESET +9	SU 05 TIME 19:00
48	Press RESET +3	SU 06 TIME --:--
49	Press Keys 2, 1, POPULAR, POPULAR	SU 06 TIME 21:00
50	Press RESET +9	SU 06 [--------]
51	Press RESET +9	SU 06 DELAY 00
52	Press RESET +9	SU 06 VOL CH1 0
53	Press RESET +9	SU 06 VOL CH2 0
54	Press RESET +9	SU 06 TIME 21:00

This completes the entries for the 6 events on Sunday's schedule.

Copying The Schedule

The last step is to program the phonograph for the rest of the week. Paul decides to save some time by copying the schedule into the remaining days of the week. To make the schedule for Monday through Saturday the same as Sunday (the Copy function is also helpful if the schedule for the other days is similar to the Sunday schedule. Do a Copy and then revise the copied schedules):

Step #	Keystroke	Display
1	Press RESET + POPULAR twice	SERVICE MODE
2	Press Keys 4, 9	SCHEDULE SMTWTFS
3	Press RESET +8	CPY SU-> S
4	Press RESET +2 (twice)	CPY SU-> SMTWTFS
5	Press POPULAR	SCHEDULE SMTWTFS

Worksheet Masters

On the following pages you will find blank worksheet masters for *Multiple Free Play On/Off Times*, the *Disc Category List*, and the *Autoplay Schedule*.

Carefully remove these masters from this manual and copy them freely for your use. Note that extra room has been left on the left hand margin of each sheet so that it may be hole-punched and kept in a binder for future reference.

DISC CATEGORY LIST

Date _____ Location _____

Name each of the eight categories and then assign the discs to each category.

Category #	Category Name	Category #	Category Name
1		5	
2		6	
3		7	
4		8	

Place an X on the category that you wish to assign to each disc.

00	1	2	3	4	5	6	7	8	50	1	2	3	4	5	6	7	8
01	1	2	3	4	5	6	7	8	51	1	2	3	4	5	6	7	8
02	1	2	3	4	5	6	7	8	52	1	2	3	4	5	6	7	8
03	1	2	3	4	5	6	7	8	53	1	2	3	4	5	6	7	8
04	1	2	3	4	5	6	7	8	54	1	2	3	4	5	6	7	8
05	1	2	3	4	5	6	7	8	55	1	2	3	4	5	6	7	8
06	1	2	3	4	5	6	7	8	56	1	2	3	4	5	6	7	8
07	1	2	3	4	5	6	7	8	57	1	2	3	4	5	6	7	8
08	1	2	3	4	5	6	7	8	58	1	2	3	4	5	6	7	8
09	1	2	3	4	5	6	7	8	59	1	2	3	4	5	6	7	8
10	1	2	3	4	5	6	7	8	60	1	2	3	4	5	6	7	8
11	1	2	3	4	5	6	7	8	61	1	2	3	4	5	6	7	8
12	1	2	3	4	5	6	7	8	62	1	2	3	4	5	6	7	8
13	1	2	3	4	5	6	7	8	63	1	2	3	4	5	6	7	8
14	1	2	3	4	5	6	7	8	64	1	2	3	4	5	6	7	8
15	1	2	3	4	5	6	7	8	65	1	2	3	4	5	6	7	8
16	1	2	3	4	5	6	7	8	66	1	2	3	4	5	6	7	8
17	1	2	3	4	5	6	7	8	67	1	2	3	4	5	6	7	8
18	1	2	3	4	5	6	7	8	68	1	2	3	4	5	6	7	8
19	1	2	3	4	5	6	7	8	69	1	2	3	4	5	6	7	8
20	1	2	3	4	5	6	7	8	70	1	2	3	4	5	6	7	8
21	1	2	3	4	5	6	7	8	71	1	2	3	4	5	6	7	8
22	1	2	3	4	5	6	7	8	72	1	2	3	4	5	6	7	8
23	1	2	3	4	5	6	7	8	73	1	2	3	4	5	6	7	8
24	1	2	3	4	5	6	7	8	74	1	2	3	4	5	6	7	8
25	1	2	3	4	5	6	7	8	75	1	2	3	4	5	6	7	8
26	1	2	3	4	5	6	7	8	76	1	2	3	4	5	6	7	8
27	1	2	3	4	5	6	7	8	77	1	2	3	4	5	6	7	8
28	1	2	3	4	5	6	7	8	78	1	2	3	4	5	6	7	8
29	1	2	3	4	5	6	7	8	79	1	2	3	4	5	6	7	8
30	1	2	3	4	5	6	7	8	80	1	2	3	4	5	6	7	8
31	1	2	3	4	5	6	7	8	81	1	2	3	4	5	6	7	8
32	1	2	3	4	5	6	7	8	82	1	2	3	4	5	6	7	8
33	1	2	3	4	5	6	7	8	83	1	2	3	4	5	6	7	8
34	1	2	3	4	5	6	7	8	84	1	2	3	4	5	6	7	8
35	1	2	3	4	5	6	7	8	85	1	2	3	4	5	6	7	8
36	1	2	3	4	5	6	7	8	86	1	2	3	4	5	6	7	8
37	1	2	3	4	5	6	7	8	87	1	2	3	4	5	6	7	8
38	1	2	3	4	5	6	7	8	88	1	2	3	4	5	6	7	8
39	1	2	3	4	5	6	7	8	89	1	2	3	4	5	6	7	8
40	1	2	3	4	5	6	7	8	90	1	2	3	4	5	6	7	8
41	1	2	3	4	5	6	7	8	91	1	2	3	4	5	6	7	8
42	1	2	3	4	5	6	7	8	92	1	2	3	4	5	6	7	8
43	1	2	3	4	5	6	7	8	93	1	2	3	4	5	6	7	8
44	1	2	3	4	5	6	7	8	94	1	2	3	4	5	6	7	8
45	1	2	3	4	5	6	7	8	95	1	2	3	4	5	6	7	8
46	1	2	3	4	5	6	7	8	96	1	2	3	4	5	6	7	8
47	1	2	3	4	5	6	7	8	97	1	2	3	4	5	6	7	8
48	1	2	3	4	5	6	7	8	98	1	2	3	4	5	6	7	8
49	1	2	3	4	5	6	7	8	99	1	2	3	4	5	6	7	8

Figure 2-12. Sample Disc Category List

MULTIPLE FREE PLAY ON/OFF TIMES

Fill in the START times, STOP times, and the COMMENTS before you make the actual scheduling changes.

Sunday	On	Off	Comment
1	___:___	___:___	_____
2	___:___	___:___	_____
3	___:___	___:___	_____

Monday	On	Off	Comment
1	___:___	___:___	_____
2	___:___	___:___	_____
3	___:___	___:___	_____

Tuesday	On	Off	Comment
1	___:___	___:___	_____
2	___:___	___:___	_____
3	___:___	___:___	_____

Wednesday	On	Off	Comment
1	___:___	___:___	_____
2	___:___	___:___	_____
3	___:___	___:___	_____

Thursday	On	Off	Comment
1	___:___	___:___	_____
2	___:___	___:___	_____
3	___:___	___:___	_____

Friday	On	Off	Comment
1	___:___	___:___	_____
2	___:___	___:___	_____
3	___:___	___:___	_____

Saturday	On	Off	Comment
1	___:___	___:___	_____
2	___:___	___:___	_____
3	___:___	___:___	_____

AUTOPLAY EVENT SCHEDULE

Day:_____ **Location**_____

Fill in the Autoplay event times, delay times, categories, and volume changes before you make the actual scheduling changes.

Day:_____

Event	Time	Categories	Delay	Vol 1	Vol 2
1	____:____	_____	_____	_____	_____
2	____:____	_____	_____	_____	_____
3	____:____	_____	_____	_____	_____
4	____:____	_____	_____	_____	_____
5	____:____	_____	_____	_____	_____
6	____:____	_____	_____	_____	_____
7	____:____	_____	_____	_____	_____
8	____:____	_____	_____	_____	_____
9	____:____	_____	_____	_____	_____
10	____:____	_____	_____	_____	_____
11	____:____	_____	_____	_____	_____
12	____:____	_____	_____	_____	_____
13	____:____	_____	_____	_____	_____
14	____:____	_____	_____	_____	_____
15	____:____	_____	_____	_____	_____
16	____:____	_____	_____	_____	_____
17	____:____	_____	_____	_____	_____
18	____:____	_____	_____	_____	_____
19	____:____	_____	_____	_____	_____
20	____:____	_____	_____	_____	_____

SERIAL # _____ LOCATION_____

ROWE CD PHONO
OPERATOR'S SET-UP SHEET

SUGGESTION: Record any changes on this log and keep for future reference.

INSTRUCTIONS
1. Items in parentheses do not appear on the digital display.
2. Customer fills in blanks where program differs from factory settings.

MENU COMMAND	MENU NAME	FACTORY SETTINGS	OPERATOR CHANGES
	*** SECURITY ***		
02	LVL 2 CODE	0000	_____
03	LVL 3 CODE	0000	_____
04	PHONO ID	0000	_____
05	VOID SRVC SW (ON/OFF)	OFF	_____
06	SECURITY IS (ON/OFF)	OFF	_____
	*** MODEM ***		
080	MODEM PASSWORD	0000000	_____
081	MODEM ANSWER ON TIME	05:00	_____
082	MODEM ANSWER OFF TIME	06:00	_____
083	MODEM #OF RINGS TO ANSWER ON	2	_____
	*** ATTRACT ***		
20	ATTRACT MODE (ON/OFF)	ON	_____
21	PAGE MODE (AD/OFF/CHG)	AD	_____
22	CHANGE TIME (# MINUTES)	10	_____
23	DISPLAY PAGE (PAGE #)	1	_____
24	PAGE IN - OUT (1 - 9)	IN-1 OUT-9	IN_____OUT_____
25	SPEED IN - OUT (1 - 9)	IN-6 OUT-6	IN_____OUT_____
	*** MESSAGE CENTER***		
270	MSG DAILY SCHEDULER	(ALL MSGS DISABLED)	_____
271	MSG DATE SCHEDULER	(MSGS 1-8 ACTIVE ALL DATES)	_____
272	MSG EDITOR	(MSGS 1-8 BLANK)	_____
	*** INITIALIZE ***		
35	CONDITION LOG	05	_____
36	SKIP CANCEL	99	_____
37	TIME CANCEL	99	_____
38	TIME[1]	EASTERN STD.	_____:_____:_____
39	DATE[2]		_____
	*** AUTO PLAY *[3]**		
40	AUTO PLAY IS (STD/ENH/CDT/OFF)	STD	_____
41	DELAY TIME (# MINUTES)	20	_____
42	START TIME (TIME OF DAY)	00:00	_____
43	STOP TIME (TIME OF DAY)	23:59	_____
44	ON DAYS	SMTWTFS	_____
45	PROGRAM	00	00_____ 01_____ 02_____ 03_____
47	APLAY STATUS (ON/OFF)	ON	_____
48	(ENH APLAY)	=00 CAT 1-----	_____
49	SCHEDULE	SMTWTFS	_____

MENU COMMAND	MENU NAME	FACTORY SETTINGS	OPERATOR CHANGES
	*** PRICING ***		
53	MULTIPLIER	5	_____
54	TIMED FPLAY (ON/OFF)	OFF	_____
55	FPLAY STATUS (ON/OFF)	OFF	_____
58	FREE SCH[4]	SMTWTFS	_____
59	COUNTRY (US/UK/AUSTRA/CANADA)	= US	_____
	*** COIN SW VALUES ***		
501	COIN SW 1	1	_____
502	COIN SW 2	2	_____
503	COIN SW 3	5	_____
504	COIN SW 4	10	_____
505	BILL 1	20	_____
506	BILL 2	100	_____
	*** PRICE LEVELS ***		
511	LVL 1 PRICE	100	_____
512	LVL 2 PRICE	200	_____
513	LVL 3 PRICE	500	_____
514	LVL 4 PRICE	0	_____
515	LVL 5 PRICE	0	_____
	*** PLAY @ LEVELS ***		
521	LVL 1 PLAYS ALT 1 PLAYS	3	_____ _____
522	LVL 2 PLAYS ALT 2 PLAYS	7	_____ _____
523	LVL 3 PLAYS ALT 3 PLAYS	18	_____ _____
524	LVL 4 PLAYS ALT 4 PLAYS	0	_____ _____
525	LVL 5 PLAYS ALT 5 PLAYS	0	_____ _____
526	ALT PRC ON	00:00	_____ _____
527	ALT PRC OFF	00:00	_____ _____
	*** OPTIONS ***		
60	LOCKOUTS (50 MAX)[5]	00_____	00_____ 01_____ 02_____ 03_____
61	PRIORITY (10 MAX)[5]	00_____	00_____ 01_____ 02_____ 03_____
62	PREMIUMS (25 MAX)[5]	00_____	00_____ 01_____ 02_____ 03_____
63	KEEP CREDIT (ON/OFF)	ON	_____
64	KEEP MONEY (ON/OFF)	ON	_____
65	ALBUM SELECT (ON/OFF)	ON	_____
66	PRIORITY PLY (ON/OFF)	ON	_____
67	TRKS IN A ROW	2	_____
68	4 HOUR CLEAR (ON/OFF)	ON	_____

MENU COMMAND	MENU NAME	FACTORY SETTINGS	OPERATOR CHANGES
	*** MORE OPTIONS 1***		
690	PAID PLAY (FIFO/RAND)	FIFO	_____
691	FREE PLAY (RAND/FIFO)	RAND	_____
692	CLEAR TIME	240	_____
693	LOCKOUT COUNT	99	_____
694	PLAY LIMIT	0	_____
695	CANCEL APLAY (ON/OFF)	OFF	_____
696	AP ONLY (25 MAX)[5]	00_____	00_____
			01_____
			02_____
			03_____
697	DAYLIT (STD/NONSTD/OFF)	STD	_____
	DAYLIT ON (ONLY FOR NON STD)		_____
	DAYLIT OFF (ONLY FOR NON STD)		_____
698	AUTOMAT CLR (ON/OFF)	ON	_____
	*** MORE OPTIONS 2***		
6990	TIM LOCK (25 MAX)[5]	00_____	00_____
			01_____
			02_____
			03_____
6991	LOCK SCH[4]	SMTWTFS	_____
6992	FREE ALBUM ON/OFF	OFF	_____
6993	"THANK YOU" ON/OFF	ON	_____
6994	POPULAR KEY	ON	_____
6995	PREMIUM RATIO	2	_____
6996	AUTOLOD DFLT	OFF	_____
6998	SEL ----	00:00	_____
6999	PAIR SEL (10 MAX)[5]	00_____	00_____
			01_____
			02_____
			03_____
	*** REPORTS ***		
78	BAUD RATE (600/1200/2400/4800/9600)	2400	_____
	CR MS DELAY	0	_____
	SPEC REPORT	0	_____
	*** RF REMOTE ***		
91	RMT SELECT (ON/OFF/ICD/XCD)	OFF	_____
92	RMT CREDIT	0	_____
93	RMT PAUSE (ON/OFF)	OFF	_____
94	PAUSE TIME	90	_____
95	RMT APLY OVR (ON/OFF)	OFF	_____
96	RMT RELOAD (0)	0	_____
97	AP VOLUME (OFF/SEPARATE/LOCKED)	OFF_____	

[1] Time shows current time of day
[2] Date shows current month/day/year
[3] See Enhanced Autoplay Tutorial
[4] See Timed Free Play and Timed Lockout Scheduling Tutorial
[5] See Programming Autoplay, Premium, Priorities, Lockouts, and Pairs

Section 3: Routine Service

INTRODUCTION

Routine and preventive maintenance are to be performed on your normal periodic service call. This section discusses how to change compact discs and titles, how to collect money, audit statistics, and preventive maintenance procedures.

DOING AN AUDIT

The following pages describe how to:

1. Access the phonograph's audit menus and extract audit figures
2. Change title strips and discs
3. Collect money

You can perform these three activities in any order that you wish.

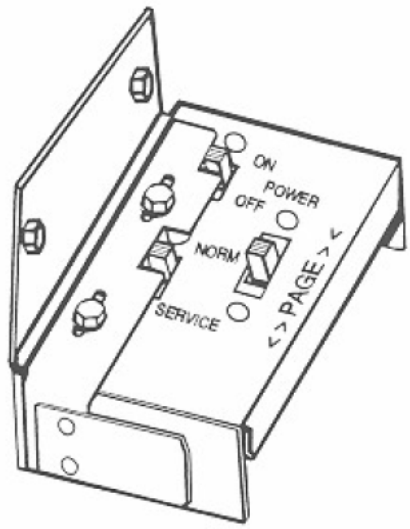

Figure 3-1. Service Switch

COLLECTING AUDIT FIGURES

Following are descriptions of the major auditing activities that need to be done on a routine service call. If you wish to do additional auditing, you can obtain the additional commands from *Table 3-1*, the AUDIT commands.

Entering The Service Mode

1. Open the door and place the SERVICE switch (*Figure 3-1*) in the SERVICE position. The phonograph display will read * SERVICE MODE *.

NOTE:

If you find that you are not seeing the display that you expect, press and hold RESET, then press POPULAR three times. This will take you back to the main menu.

At this point you can begin performing the audits. *Refer to the CD-100F Service Mode Map (Figure 2-10)* for a diagram of the audit menus and commands. Described here also are the procedures for clearing the audit values.

Cash Audits

1. Type 100. This displays the CURRENT CASH value. Record the CURRENT CASH figure in your usual way and go to the next step.

2. Press and hold RESET and then press 1. This will move you down to the next display. Record the CASH VALUE in the usual way.

3. Repeat Step 2 until you do the last CASH audit, which is the #2 BILLS audit. Do this audit, then press and hold RESET while you press POPULAR three times.

Play Audits

1. Type 110. This displays the FREE CREDITS value. Record the FREE CREDITS figure in your usual way and go to the next step.

2. Press and hold RESET and then press 1. This will move you down to the next display. Record the credit value in the usual way.

3. Repeat Step 2 until you do the last PLAY audit, which is the OVERPLAY audit. Do this audit, then press and hold RESET while you press POPULAR three times.

Non-Resettable Audits

1. Type 120. This displays the NON-RESETTABLE CASH value. Record the NON-RESETTABLE CASH value in your usual way and go to the next step.

2. Press and hold RESET and then press 1. This will move you down to the next display. Record the value in the usual way.

3. Repeat Step 2 until you do the last NON-RESETTABLE audit, which is the SELS audit. Do this audit, then press and hold RESET while you press POPULAR three times. This returns you to the main menu.

Most Popular Disc

1. Type 17. The most popular disc number will be displayed.

2. If you wish to know the next-to-the-most popular, press and hold RESET and then press 3. Press and hold RESET, then press 3 to display each successive "Most Popular" disc. Press and hold RESET, then press 2 to move through the popularity display toward the most popular disc.

3. Press and hold RESET while you press POPULAR twice. This returns you to the main menu.

Least Popular Disc

1. Type 18. The least popular disc will be displayed.

2. To display the next least popular disc, press and hold RESET and then press 2. Press and hold RESET, then press 2 to display each successive least popular disc. Press and hold RESET, then press 3 to move

through the popularity display toward the least popular disc.

3. Press and hold RESET while you press POPULAR twice. This returns you to the main menu.

Most Popular Selection

1. Type 19. The most popular selection number will be displayed.

2. To display the next most popular selection, press and hold RESET and then press 3. Press and hold RESET and then press 3 to display each successive most popular selection. Press and hold RESET, then press 2 to move through the popularity display toward the most popular selection.

   You can request the popularity for a particular selection by pressing the selection number (four digits).

Clearing The Audit Values

The three CLEAR options will not clear the corresponding audit value until the POPULAR button is pressed.

For example:
You can display the CLEAR CASH message and then move to CLEAR PLAYS and then move back to CLEAR CASH without actually clearing either set of values.

The following steps describe how to perform each of the three CLEAR commands as a separate activity. If you wish to use the "short cut" method, follow the *Using the CD-100F Commands Instructions in Section 2*. Each of these commands may be executed from SECURITY LEVEL 2 or 3.

CLEAR CASH

1. Make sure that you are in the SERVICE mode and that * SERVICE MODE * is on the display.

2. Type 14. The message CLEAR CASH will appear on the display. Press POPULAR to clear the cash values. The display will blink when the command is executed.

3. Press and hold RESET while you press POPULAR twice.

CLEAR PLAYS

1. Make sure that you are in the SERVICE mode and that * SERVICE MODE * is on the display.

2. Type 15. The message CLEAR PLAYS will appear on the display. Press POPULAR to clear the play values. The display will blink when the command is executed.

3. Press and hold RESET while you press POPULAR twice.

CLEAR SELECTION POPULARITY

1. Make sure that you are in the SERVICE mode and that * SERVICE MODE * is on the display.

2. Type 16. The message CLEAR SEL POP will appear on the display. Press POPULAR to clear the

popularity values. The display will blink when the command is executed.

3. Press and hold RESET while you press POPULAR twice.

CHANGING CD'S AND TITLES

NOTE:

Do not attempt to turn the CD title pages by hand. If the title page assembly is unplugged or not operating electronically, use the handwheel on the back of the assembly *(See Figure 1-2).*

The procedure for loading CD's and titles into an empty phonograph is different from the procedure to change CD's and titles. Please be sure you are following the procedure that describes your situation.

Preparing Titles For The Title Holder - See Pages 2-2 thru 2-5

Changing Discs

You can (1) initialize each disc as you change it, or (2) you can write down all of the disc numbers and then type them all into the INITIALIZE command. The following steps describe the second method.

Change discs as follows:

1. Unlock and open the door.

2. Move the SERVICE switch to the SERVICE position (*Refer to Figure 3-1*).

3. Press the SCAN button to move the disc space to the left or right of the transfer arm.

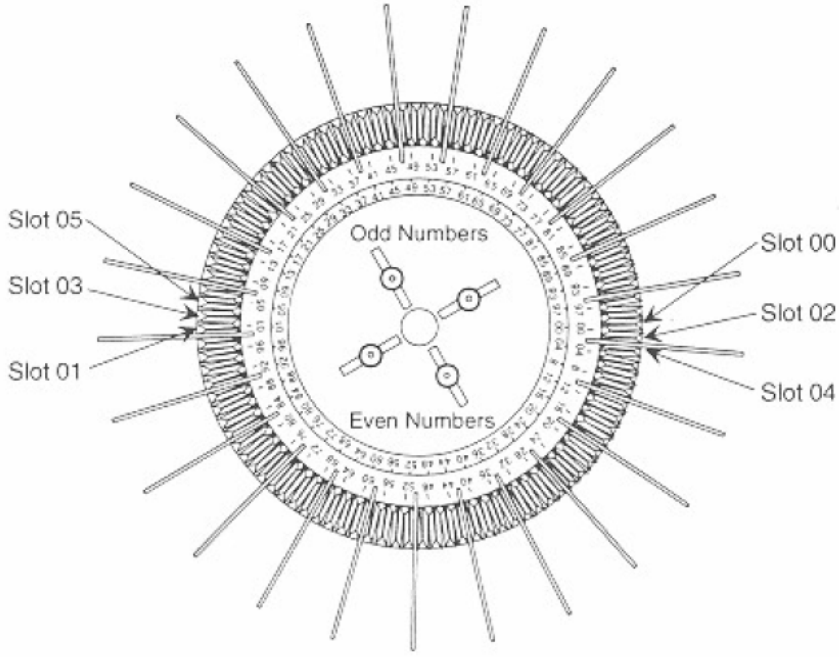

Figure 3-2. Loading the Molded CD Magazine

4. Slide the old CD out of the slot and slide the new CD into the slot (*See Figure 3-2*) with the label to the right. Write the disc number on a note pad.

Note that disc positions in the molded CD magazine are identified by numbers at every other slot, with even numbered slots labeled on one half of the magazine, and odd numbered slots labeled on the other half.

For example, on the even numbered half of the magazine, slots 00, 04, and 08 are labeled, and the slots in between – 02 and 06 – are not, as illustrated in *Figure 3-2*.

NOTE:

When loading the magazine, be sure the disc rests in the same numbered slot in both the front and rear of the magazine. Be sure to keep the magazine disc load approximately balanced. If the magazine is partially loaded with all discs on one side, the sprag wheel may lock and the magazine will not turn.

5. Repeat step 4 until all discs have been changed.

6. Release the two catches holding the keyboard/display.

7. Place the SERVICE switch in the SERVICE mode and check that * SERVICE MODE * is on the keyboard display.

8. Type 31 and the display will show PROGRAM INIT - -. Enter the CD numbers that you have changed and press POPULAR after each number. After you have entered all of the disc numbers, place the phonograph into the NORMAL mode and the initialization process will start. Selections can be made while the new discs are being initialized.

COMPLETE AUDIT COMMAND LIST

Table 3-1 is a complete list of the Audit commands with an explanation of what each command does.

Table 3-1. Audit Commands

Command	Description
1	**AUDITS** - Are the functions and menus that allow you to display and reset the various accumulated figures for money, popularity, number of plays, and credits.
10	**Cash Audits** - Is the menu that allows you to display, but not change, cash totals, number of coins through the coin switches, and the total number of bills.
11	**Play Audits** - Is the menu that allows you to display, but not change, credits, autoplays, mechanism plays, and album plays.
12	**Non-Resettables** - Is the menu that allows you to display the ongoing totals. These totals cannot be reset from any security level.
13	**Clear Disc Popularity** - Clears the popularity for all discs. This option should only be used after the popularity figures (Selections 7 and 8 in this menu) have been read and recorded. Press POPULAR to clear the disc popularity values. The display will blink when the command is executed.
14	**Clear Cash** - Clears all current cash totals. This option should only be used after the figures for Cash Audits (Selection 0 in this menu) have been read and recorded. Press POPULAR to perform this function. The display will blink when the command is executed.
15	**Clear Plays** - Clears all current play totals. This option should only be used after the Play Audit figures in Play Audits (Selection 1 in this menu) have been read and recorded. Press POPULAR to perform this function. The display will blink when the command is executed.
16	**Clear Selection Popularity** - Clears all current selection popularity. This option should only be used after Popularity Figures (Selection 9 in this menu) have been read and recorded. Press POPULAR to perform this function. The display will blink when the command is executed.
17	**Display The Most Popular Disc** - Displays the most popular disc number (00-99), followed by the number of plays (9999 maximum) that disc had. To display the next most popular disc, press and hold RESET and then press 3. Press and hold RESET and then press 3 to display each successive most popular disc. Press and hold RESET and then press 2 to move up through the popularity display toward the most popular disc. You can request the popularity for a particular disc by pressing the disc number.

Table 3-1. Audit Commands
Continued

Command	Description
18	**Display The Least Popular Disc** - Displays the least popular disc number (00-99) followed by the number of plays that the disc had. To display the next "least popular" disc, press and hold RESET and then press 2. Press and hold RESET and then press 2 to display each successive least popular disc. Press and hold RESET and then press 3 to move up through the popularity display toward the least popular disc. You can request the popularity for a particular disc by pressing the disc number.
19	**Display The Most Popular Selection** - Displays the most popular selection number (Disc 00-99 followed by Selection 00-99, a total of four digits), followed by the number of plays (9999 maximum) that selection had. To display the next "Most Popular" selection, press and hold RESET and then press 3. Press and hold RESET and then press 3 to display each successive most popular selection. Press and hold RESET and then press 2 to move up through the popularity display toward the most popular selection. A total of 100 selection numbers may be contained in the MOST POPULAR list. You can request the popularity for a particular selection by pressing the selection number (four digits).
10	**CASH AUDITS** - Allows you to display, but not change, cash totals, number of coins through the coin switches, and the total number of bills.
100	**Current Cash** - Displays the total amount of bill and coin money collected since the last time the CLEAR CASH command (Selection 4 in the AUDITS menu) was used.
101	**Current Bill** - Displays the total amount of bills collected since the last time the CLEAR CASH command (Selection 4 in the AUDITS menu) was used.
102	**Current Coin** - Displays the total amount of coins collected since the last time the CLEAR CASH command (Selection 4 in the AUDITS menu) was used.
103	**Current Wallbox** - Displays the total amount of money collected by wallboxes since the last time the CLEAR CASH command (Selection 4 in the AUDITS menu) was used.
104	**Current Number Of Type 1 Coins** - Displays the total number of Type 1 coins (5¢) collected since the last time the CLEAR CASH command (Selection 4 in the AUDITS menu) was used.
105	**Current Number Of Type 2 Coins** - Displays the total number of Type 2 coins (10¢) collected since the last time the CLEAR CASH command (Selection 4 in the AUDITS menu) was used.

Table 3-1. Audit Commands
Continued

Command	Description
106	**Current Number Of Type 3 Coins** - Displays the total number of Type 3 coins (25¢) collected since the last time the CLEAR CASH command (Selection 4 in the AUDITS menu) was used.
107	**Current Number Of Type 4 Coins** - Displays the total number of Type 4 coins (50¢) collected since the last time the CLEAR CASH command (Selection 4 in the AUDITS menu) was used.
108	**Number Of Type 1 Bills** - Displays the total number of Type 1 ($1) bills collected since the last time the CLEAR CASH command (Selection 4 in the AUDITS menu) was used.
109	**Number Of Type 2 Bills** - Displays the total number of Type 2 ($5) bills collected since the last time the CLEAR CASH command (Selection 4 in the AUDITS menu) was used.
11	**PLAY AUDITS** - Allows you to display, but not change, credits, autoplays, mechanism plays, and album plays.
110	**Free Credits** - Displays the number of free credits given since the last time the CLEAR PLAYS command (Selection 5 in the AUDITS menu) was used.
111	**Paid Credits** - Displays the number of paid credits given since the last time the CLEAR PLAYS command (Selection 5 in the AUDITS menu) was used.
112	**Autoplays** - Displays the number of Autoplays made since the last time the CLEAR PLAYS command (Selection 5 in the AUDITS menu) was used.
113	**Mechanism Plays** - Displays the number of times the mechanism has played CD's since the last time the CLEAR PLAYS command (Selection 5 in the AUDITS menu) was used.
114	**Album Buys** - Displays the number of times albums have been bought since the last time the CLEAR PLAYS command (Selection 5 in the AUDITS menu) was used.
115	**Most Popular Plays** - Displays the number of times that the POPULAR button was used to select the most popular selection since the last time the CLEAR PLAYS command (selection 5 in the AUDITS menu) was used.
116	**Normal Selections** - Displays the number of selections made from the keyboard.
117	**Overplay** - Displays the number of overplays selected since the last time the CLEAR PLAYS command (Selection 5 in the AUDITS menu) was used.

Table 3-1. Audit Commands
Continued

Command	Description
12	**NON-RESETTABLES** - These totals for cash, plays, and credits can be displayed from any security level, but they cannot be reset from any security level. These totals constitute the permanent phonograph history.
120	**Cash** - Displays total cash (bill and coin) received by the phonograph.
121	**Bill** - Displays total bill cash received by the bill acceptor.
122	**Coin** - Displays total coin cash received by the coin acceptor.
123	**Wallbox** - Displays total cash received by all wallboxes.
124	**Free** - Displays total free credits
125	**Paid** - Displays total paid for credits
126	**Most Popular** - Displays the total number of Most Popular selections made with the POPULAR button.
127	**Mechanism** - Displays the total number of mechanism cycles.
128	**Album** - Displays total album buys.
129	**Selections** - Displays the total number of selections made using the keyboard.

Collecting Money

1. Open the top door and unlock the bill acceptor bill box by reaching in behind the bill acceptor.
2. Remove the currency, then close and lock the bill box.
3. Close the top door.

PREVENTIVE MAINTENANCE

Preventive maintenance should be performed at the regular intervals specified, while adjustments should be made only when necessary.

In addition to cleaning the cabinet each time the location is visited, clean the interior every three to six months, as required. Keeping the cabinet interior clean reduces dust, resulting in increased disc and component life (*See the table below for cleaning details*).

- Use a vacuum cleaner to remove heavy dust deposits.
- Use a clean, lint free cloth saturated in denatured alcohol to clean mechanical parts.
- Clean electrical parts using a clean, dry cloth or camel hair brush.

WARNING:

Use solvents in a well ventilated area only. Do not use solvents on plastic parts.

Action Required	Procedure
1. Clean Glass	a. Clean all glass with a paper towel and a non-abrasive cleaner. b. Dry with a clean, lint-free cloth.
2. Clean painted wood and metal surfaces	a. Clean all painted wood and metal surfaces with mild soap and water. DO NOT USE SOLVENTS. b. Apply a good quality auto or furniture wax to protect the finish.
3. Clean chrome trim	a. Use a damp or dry cloth to remove any dust or dirt. b. Use mild soap and water to remove stubborn deposits. Do not use strong detergents or abrasives of any kind.
4. Clean plastic trim	Wipe all plastic surfaces with a damp or dry cloth only. DO NOT USE SOLVENTS.
5. Clean electrical components.	Clean all electrical components with a clean, dry, lint-free cloth or soft-bristle brush only.

CD Player Laser Lens

The CD player laser lens can collect dust, dirt, and smoke. These deposits can cause various intermittent problems that may, in time, become more severe. To avoid these problems, we recommend that you clean the laser lens occasionally. This interval can be as often as every other month, or less in some locations. Follow this procedure to safely clean the laser lens:

NOTE:

Before you clean the laser lens, be sure to turn the jukebox power OFF and ground yourself by touching a grounded component (such as the CBA) to discharge any static buildup that may harm the CD player.

1. Remove loose particles from the lens by gently brushing it with a camel's hair brush or a blow brush (both items can be purchased at most camera supply stores). Brush in the direction of the arrows shown in *Figure 3-3*. Take care not to snag brush bristles under the lens. The lens is mounted on a delicate suspension spring that may be damaged with even a soft brush.

2. Remove any remaining dirt by placing one to three drops of Kodak Lens Cleaner (Kodak Catalog Number 176 7136, available from photographic supply stores or Rowe 21966601) on a lint-free "Q"-Tip and very gently wiping dust and smoke deposits from the lens. Wipe in the direction of the arrows shown in *Figure 3-3*. Take care not to damage the delicate lens suspension spring. Do not allow any of the lens cleaner to run down the side of the lens.

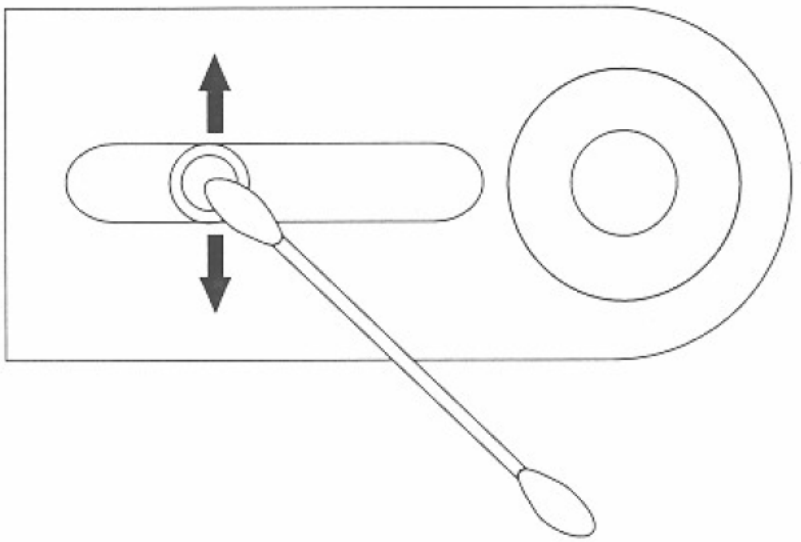

Figure 3-3. Cleaning the Laser Lens

COIN ACCEPTORS (Optional)

COIN MECH (Optional)

The phonograph is equipped to physically mount a 3.5 inch wide (80mm) coin acceptor, mechanical or electronic version, with an accepted coin diameter from .7 (18mm) to 1.2818 (31mm).

Mechanical

A valid coin is determined by the actuation of the microswitch (*Figure 3-4*), which when tripped will give credit of 25 cents (unless the software default is changed).

The switch is mounted to a chute subassembly that guides the coins to the microswitch lever. By moving the #8-32 screw and the spacer, the microswitch is able to be actuated by coins of .7 (18mm) inches in diameter to 1.312 (33mm).

Electronic

The electronic coin acceptors require the use of the electronic interface, which makes the phonograph capable of handling up to 4 different coins.

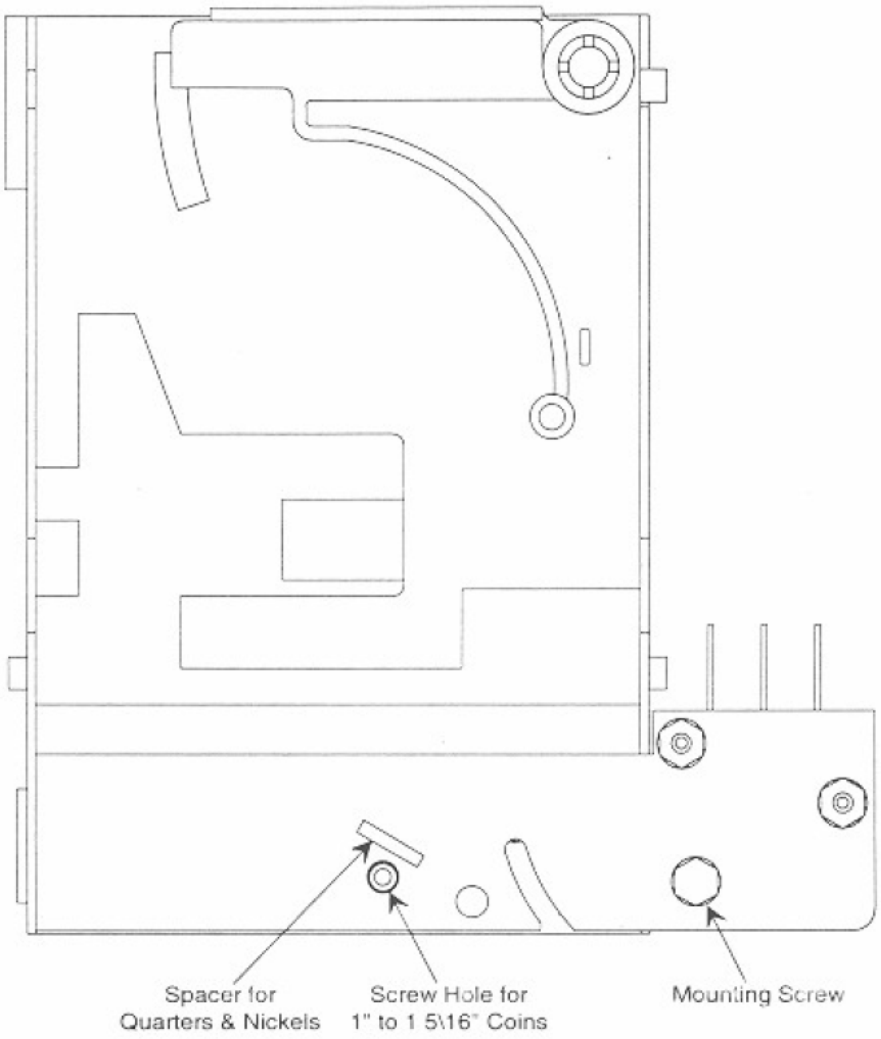

Figure 3-4. Coin Switch