Section 5: Troubleshooting

INTRODUCTION

The CD-100C Phonograph incorporates several modules which plug in for rapid service. The most likely causes of phonograph problems are:

1. Continuous or intermittent opens in a harness. The cause can be wiring, a terminal, or a bad terminal crimp.

   - Check that all plugs are firmly seated.
   - Check that connector pins are not bent, broken or pushed through the back of connectors when mated.
   - Check for bad solder joints, especially at connector pins.

2. A defective module *(see table 5-1)*. Troubleshooting procedures are directed at module replacement, not repair.

Table 5-1. Replaceable Modules

Part No.	Description
40832201	Central Control Computer (CCC)
61048101	Mechanism Control and CD decoder
30955401	CD Player
40770609	Power Supply
40855001	Digital Display
40856101	Title Rack-Keyboard Interface Assembly

TROUBLESHOOTING AIDS

The troubleshooting topics presented in this section are:

- A summary of the functions for each of the phonograph's replaceable modules
- A sequence of operation explanation and a Block Diagram *(figure 5-1)* to help you isolate the problem to a harness or a module.
- The RED LED STATUS lamps *(figure 5-2)*.
- Instructions on how to use the ERROR and WARNING messages
- Modular Troubleshooting Charts that list the *Trouble*, *Symptom*, and *Probable Cause*
- A Sound System Quick Check

NOTE:

The CBA-2 service procedures are described in *Section 4* of this manual.

REPLACING THE CCC EPROM

If you have changed the CCC EPROM, use the following procedure to reset the CCC:

1. Put NORM/SERVICE switch to SERVICE and ON/OFF Power switch to OFF.
2. Press and hold keyboard 0 and 1 switches down and place the ON/OFF POWER switch power to ON; hold the 0 and 1 buttons down until the display shows LOADING DEFAULTS. Do not be concerned when the 14-04 WARNING appears, because it is just a status message indicating that the defaults were loaded. For a fresh start, clear out this warning (CODE 81).

FREE PLAY

1. Enter the SERVICE mode by setting the SERVICE switch to the SERVICE position.
2. Enter 55. This will place you in the PRICING menu, OPTION 5. Press and hold RESET and press 9. The display will change from FPLAY STATUS OFF to FPLAY STATUS ON. Press POPULAR to complete the change.

CD MODULE FUNCTIONS

Digital Display Module

- A "dumb" controller (i.e. cannot make any decisions)
- Displays information sent by CCC

Title Rack-Keyboard Interface Module

- Contains the TITLE DISPLAY motor driver IC. The IC is controlled by the CCC.

CCC

- The master controller
- Has battery backed up RAM
- Controls all credit functions
- Stores all selections
- Controls all programming functions
- Makes all system decisions
- Mutes and unmutes the audio amplifier

Mechanism Control

- A slave controller
- Plays selections sent by the CCC
- Controls all mechanism functions
- Controls the CD player

CBA-2 Logic Board

- A slave controller
- Tells CCC when a valid bill is accepted.

Rowelink and the Power Bus (voltages, Commons & System Reset) are the only connections between CCC, mechanism control and CBA-2. Rowelink is a 2-wire communication channel that ties the system components together. The ROWELINK COMMAND (CCC), and ROWELINK TX (mechanism control), LED's should always be flickering.

SEQUENCE OF OPERATION

This sequence of operation describes the phonograph cycle and jobs performed by each module shown in the Block Diagram *(figure 5-1)*.

In the Block Diagram, the TITLE DISPLAY switches are shown in the PAGE 1 position. The mechanism OUTER CAM and INNER CAM switches are shown in the MAGAZINE ROTATE position.

Step 1. Power is turned on, voltages and commons are applied to modules and components.

At Line Voltage	Voltages Labeled	Should Measure
115 VAC	28 VAC	26 to 30 VAC
115 VAC	+28 VDC	+23 to +30 VDC
95 to 135 VAC	+8 VDC	+8.2 to +9.9 VDC
115 VAC	9.5 VAC	8.75 to 10 VAC

Step 2. The modules sense power turn on, no selections or credit in memory, and the SERVICE switch is in the NORMAL position.

CCC

- +5 VDC LED lights
- BOARD ERROR LED flashes 3 times to indicate that ROM, RAM and real time calendar clock have tested OK.
- ROWELINK COMMAND LED flickers, indicating that serial communication commands are being sent from the master (CCC) to the slaves (mechanism control and CBA-2).

Mechanism Control

- +5V, +10V, -10V, +12V, -12V LEDS light.
- BOARD ERROR LED flashes 3 times to indicate that ROM, RAM and other checks have tested OK.
- ROWELINK TX (Rowelink response) LED flickers indicating that communication is occurring between the mechanism control (a slave) and CCC (the master). Each time it flickers, communication has successfully occurred.

CBA-2

- PWR LED lights
- STATUS LED flashes 1 time

Digital Display

- +5 VDC LED lights
- CCC serially sends information (via TX data, clock) and display shows:
- Checksum = XXXX
- RAM test passed
- 0 (selections remaining)
- After 10 seconds, the moving messages ROWE, CD PHONOGRAPH and PLAY THE MUSIC appear.

Step 3. Customer deposits money. Play credit is established.

- Money is deposited
- CBA-2 tells CCC if a bill was validated and stacked.
- • CCC senses coins from the closed coin switches.

- • CCC uses pricing information (COIN SWITCH VALUES, PRICE LEVELS, PLAYS @ LEVEL and MULTIPLIER) stored in it, to convert money deposited into play credits.
- CCC sends (via TX data, clock) credits to digital display and they appear above the SELECTIONS REMAINING legend.
- • CCC tells the mechanism control the money's value and the mechanism control increments the money counter.

Step 4. Customer makes a selection.

- CCC determines that a switch is closed or open by sending out strobes and sensing returns.
- Customer finds the selection that he wants to make by using the keyboard IN (> <) and OUT (< >) title page switches.
- CCC sends out Strobes 1, 9 and 10 to the TITLE RACK-KEYBOARD INTERFACE.
- • The motor driver in the TITLE RACK-KEYBOARD INTERFACE uses Strobe 9 to control speed and Strobe 10 to control direction.
- • CCC determines when to stop the motor (i.e. a page has flipped) by sensing the state of the INDEX switch on return RET 1.
- • CCC determines when to change directions by sensing the state of the LIMIT switch on return RET 0, or using PAGE IN, OUT data in the ATTRACT menu.
- • Customer enters 4 digits (a 2-digit disc number and a 2-digit track number).
- • CCC senses the pushed keys by sending out Strobes 2, 3, 4, 5 and sensing returns RET 0, 1, 2 and 3.
- • Digital display shows digits as they are entered above the SELECTION BEING MADE.
- • Selection stored in the CCC's memory.
- • Credit is cancelled.
- • Selection is displayed for approximately 4 seconds after it is made.

Step 5. Selection is located and played.

- CCC sends the selection to the mechanism control.
- Mechanism Control searches for the disc.
- • Detent coil is energized and the magazine unlocks.
- • Magazine motor rotates the magazine.
- • Mechanism control SCAN/TRANSFER LED lights.
- • Digital display shows the selection playing as — — — — .
- • Mechanism control locates the disc by counting gear teeth interruptions of the INDEX optical switch light beam.

- Disc located and transferred to the play position.
- • Magazine motor stops and the magazine locks (detented).
- • Transfer motor runs and the disc is placed in the play position.
- • Outer cam Common connected to the N.O. contact.

- Mechanism control SCAN/TRANSFER LED goes OFF.
- Mechanism control tells the CDM-4 what track (i.e. selection) to play.
- CDM-4 tells the mechanism control that the track has been located.
- Selection plays
- • Mechanism control tells the CCC that the selection is playing.
- • CCC unmutes the audio amplifier.
- • Selection is erased from CCC's memory.
- • Digital display shows that the selection is playing.
- • Mechanism control monitors the disc condition and tells the CCC if disc problems occur.

Step 6. Selection ends, the disc returns to magazine, the CCC searches selection memory.

- Mechanism control tells the CCC that the selection is over.
- CCC mutes the audio amplifier
- Transfer motor runs and the disc is returned to the magazine
- Inner cam Common connects to the N.O. contact when the disc is in the magazine.
- CCC searches its selection memory. If it contains one or more selections, steps 5 and 6 are repeated.

Step 7. Phono returns to STANDBY and AUTOPLAY timing begins.

- All selections have played.
- Digital display shows moving messages: ROWE, CD PHONOGRAPH, and PLAY THE MUSIC.

This page intentionally left blank.

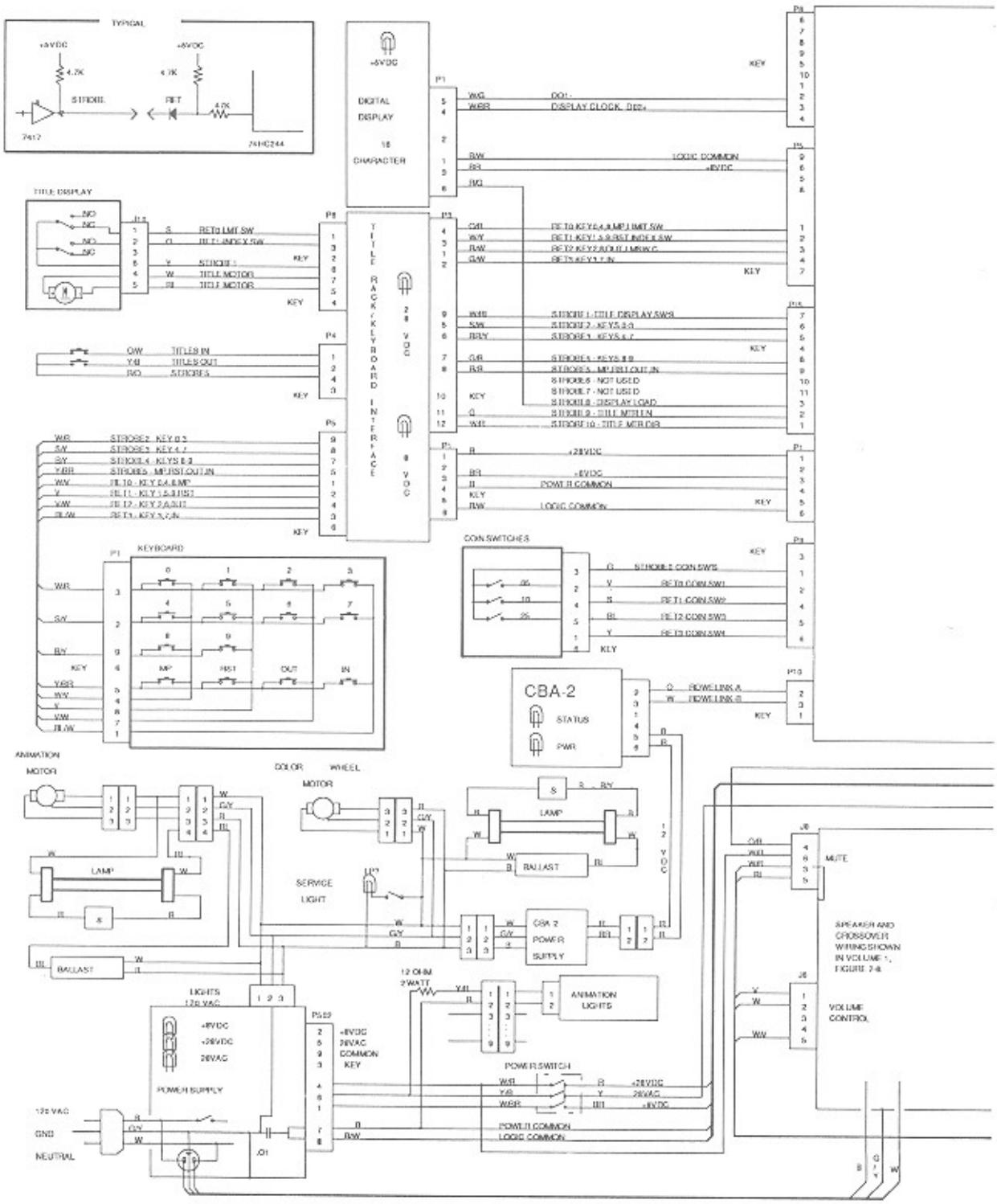
TYPICAL
+5VDC
4.7K
STROBE
RET
7417
74HC244
DIGITAL DISPLAY 16 CHARACTER
TITLE DISPLAY
TITLE RACK/KEYBOARD INTERFACE
KEYBOARD
COIN SWITCHES
CBA-2
STATUS
PWR
ANIMATION MOTOR
COLOR WHEEL MOTOR
LAMP
BALLAST
SERVICE LIGHT
CBA 2 POWER SUPPLY
SPEAKER AND CROSSOVER WIRING SHOWN IN VOLUME 1, FIGURE 7-8
MUTE
VOLUME CONTROL
ANIMATION LIGHTS
LIGHTS 120 VAC
POWER SUPPLY
POWER SWITCH
120 VAC
GND
NEUTRAL
LOGIC COMMON
POWER COMMON

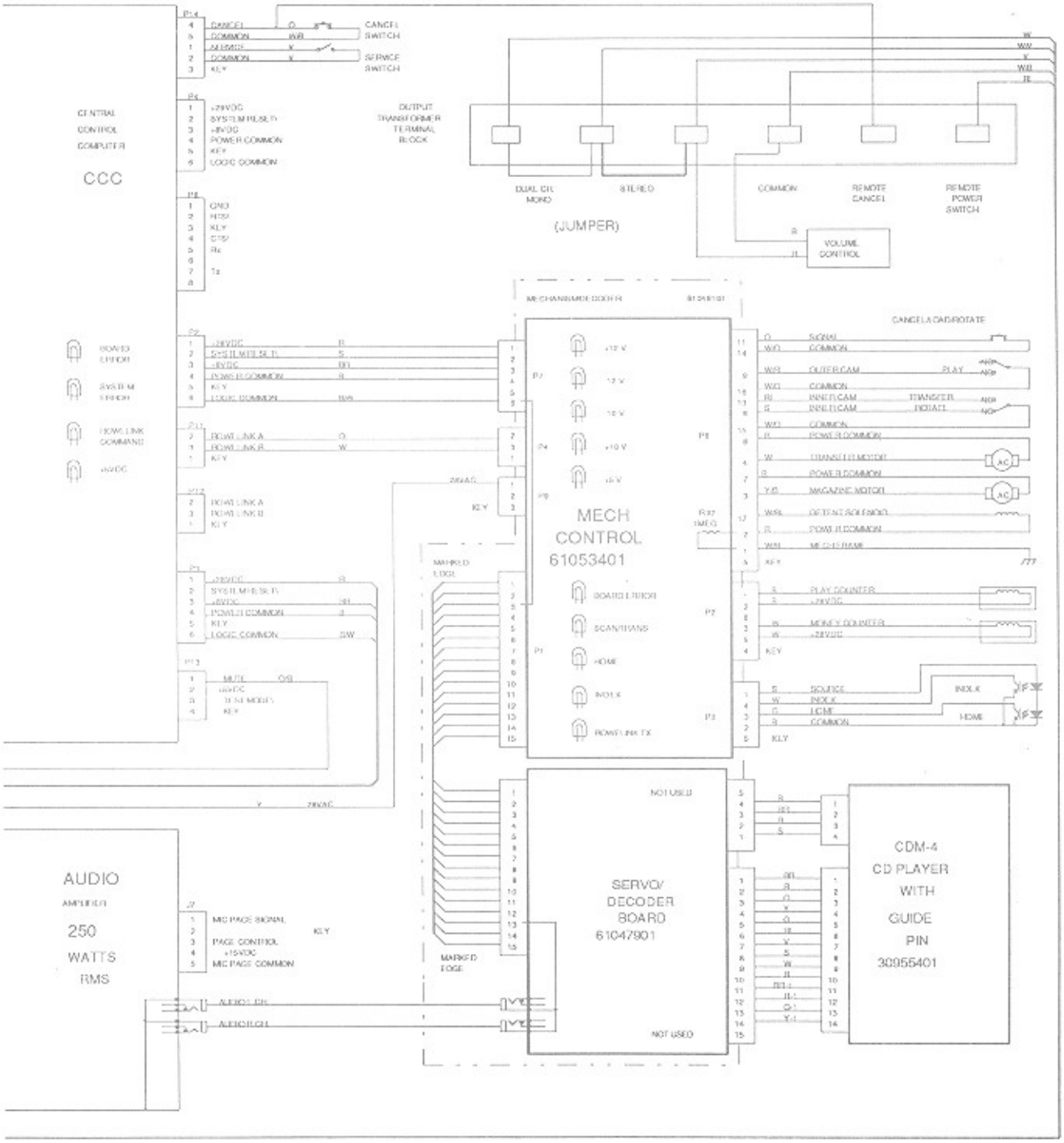

Block Diagram
Figure 5-1. CD-100C

STATUS LAMPS

The red LED indicators are connected to various strategic points in the phonograph's circuits to indicate the status of power and signal circuits.

Main Power Supply LED's

+8 Volts DC
+28 Volts DC
28 Volts AC

These indicators light when their corresponding voltages are present and no wiring shorts are present.

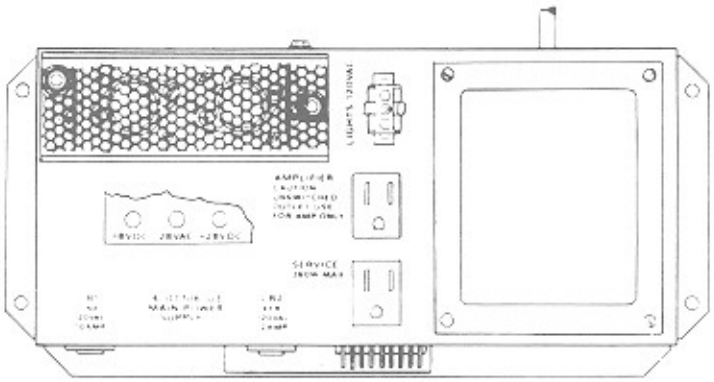

Main Power Supply

Mechanism Control And CD Decoder

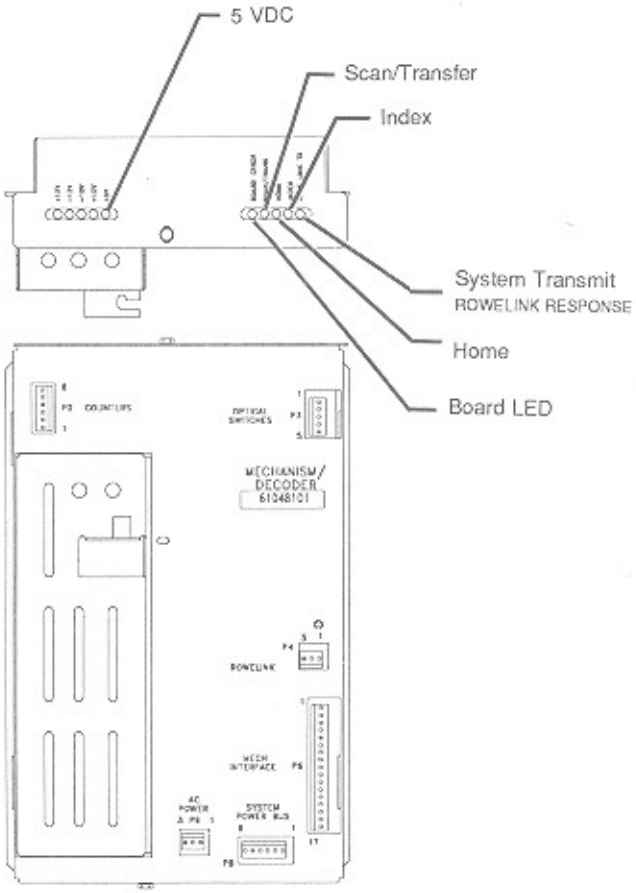

OPT. SW. INDEX — Lights when the index section of the optical switch sees a tooth space of the magazine drive gear. Flickers when the magazine rotates.

OPT. SW. HOME — Lights when the HOME section of the optical switch sees the hole in the magazine drive gear. Flickers when the magazine CD Position 99 passes the transfer position.

5V, +10V, -10V, +12V, -12V — Indicate supply voltages and all should always be lit.

ROWELINK TX — Flashes when the CD mechanism is transmitting to the CCC.

BOARD ERROR — Blinks on and off three times on power up. Any other time, this LED indicates that a fatal mechanism error (phonograph out of service) has occurred.

SCAN/TRANSFER — Lights when either the scan or the transfer motor is activated.

Central Control Computer

BOARD ERROR	Blinks 3 times on power up. If it stays on, an error has been detected.
SYSTEM ERROR	Lit only when the phonograph is out of order. The type of error that caused the shutdown can be examined from the SERVICE mode.
ROWELINK COMMAND	Flashes when the CCC is transmitting messages to slave devices (i.e. mechanism, CBA-2
+5 VDC	+5 VDC is present.

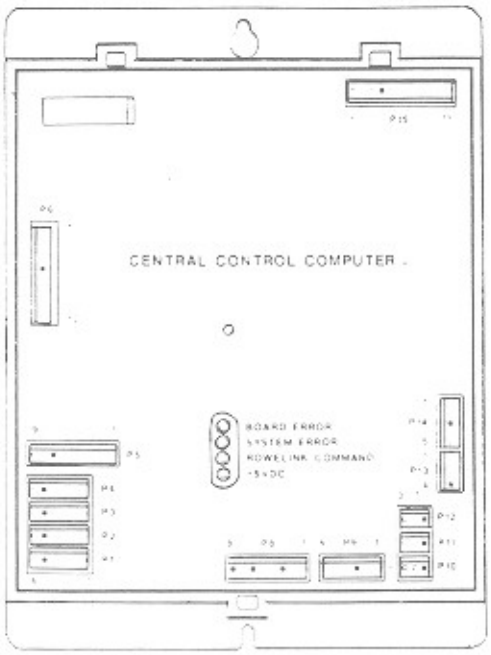

Central Control Computer

Digital Display

+5 VDC	+5 VDC is present.

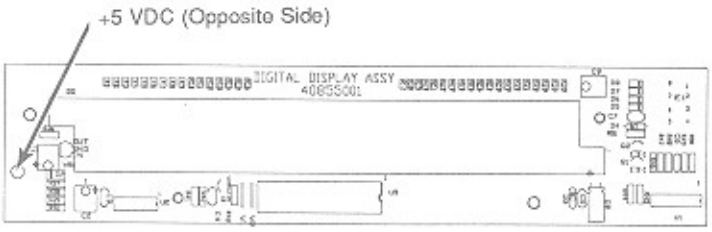

CBA-2

BA STATUS	Blinks one time at power up then stays off. See Section 4 Troubleshooting if always lit or flashing.
PWR	Voltage is present.

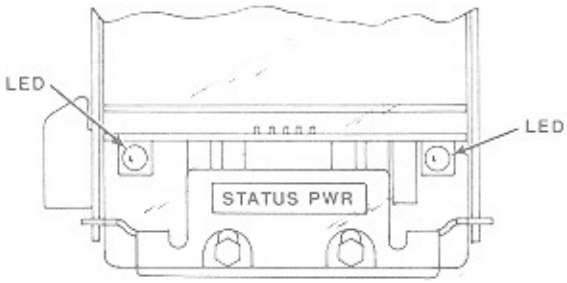

Figure 5-2. Status Indicators

ERRORS AND WARNINGS

Basic Concepts

When you switch to SERVICE mode, you will see one of two displays:

- If the phonograph has not encountered any errors or warnings, * SERVICE MODE * will be displayed.
- If the phonograph has encountered errors or warnings, --ERRORS EXIST-- will be displayed. This message will only appear as you enter SERVICE mode, and it will not change menu or command operation.

ERRORS (ERR)

- Cause phonograph shutdown and show the OUT OF ORDER message.
- Usually require a service call, component replacement, adjustment, or harness repair.
- Are always shown as active (A), even if they cleared up.

If you turn power OFF and ON, the phonograph will operate if error cleared up. If error is still present, the phonograph will shutdown. Errors that clear up do not require service unless phonograph is malfunctioning.

WARNINGS (WARN)

- Do not cause phonograph shutdown.
- Phonograph may or may not operate.
- Service personnel are made aware by the --ERRORS EXIST-- message appearing upon entering the service mode.
- Shown as active (A) until the problem clears up.
- Not active (N) warnings do not require service unless phonograph is malfunctioning.

VIEWING THE ERRORS AND WARNINGS

NOTE:

1. **If the CCC thinks that a key other than RESET is closed, it will not accept other keys. This problem will not allow you to view the error/warnings. The probable cause is a short in the keyboard, a short in RET 0, 1, 2 or 3 wiring, defective CCC, or a short in < > page > < switch or wiring.**
2. **The viewing procedure can be started over by holding RESET and repeatedly pushing POPULAR until the display shows * SERVICE MODE *. Then start at step 2.**

Steps	Display Shows
1. Enter SERVICE mode	--Errors Exist--
2. Type 8	* STATUS *
3. Type 0 *(see note 1)*	Error History
4. Push POPULAR	X WARN XX-XX XX A = Active N = Not Active Source of warning Type of warning Number of occurrences **OR** X ERR XX-XX XX A = Active Source of error Type of error Number of occurrences
5. Hold RESET, push 9	START XX:XX XX/XX Time of first occurrence Month/day of first occurrence
6. Hold RESET, push 9	END XX:XX XX/XX Time it last cleared up (not active) Month/day it last cleared up (not active) 00:00 00/00 if first occurrence and still active, or ERR message
7. Hold RESET, push 3	Next ERR or WARN if a different one exists. Otherwise stays the same.

8. Repeat steps 5, 6, and 7 as often as necessary (*See the Notes that follow*).

NOTE:

3. **You can review the** WARN **or** ERR, START **or** END **by holding** RESET **and pushing 9 as often as desired.**
4. **Steps 4 and 5 can be skipped.**
5. **Hold** RESET**, push 2 to search backwards through errors.**

EXAMPLE 1:

N WARN 06-02 15
START 14:30 06/01
END 15:00 06/01

Message means

- CBA-2 thinks bill transport V1 cell was blocked 15 times.
- First occurrence was 2:30 p.m. on June 1.
- Last occurrence cleared up 3:00 p.m. on June 1.

Probable cause

- Someone tried to obtain free credit by inserting a foreign object.

EXAMPLE 2:

A ERR 05-63 03
START 09:10 07/13
END 00:00 00/00

Message means

- The CCC has sent messages (via the ROWELINK) to the mechanism control, but the CCC has not received any response for 1 minute.
- First occurrence was 9:10 a.m. on July 13.

NOTE:

6. **A (Active symbol) always proceeds ERR, even if the problem is not active now.**
7. **An ERR message always shows 00:00 and 00/00 for the END time and date.**

ERROR AND WARNING SUMMARY

The following list summarizes all possible errors and warnings that can be displayed. For details of causes and corrective action, *see Description Of Errors/Warnings And Probable Causes* that follows this summary.

Coin Switches (01)

01-17	#1 coin switch
01-18	#2 coin switch
01-19	#3 coin switch
01-20	#4 coin switch
01-31	Multiple coin switches

Keyboard Switches (02)

02-16	Key 0
02-17	Key 1
02-18	Key 2
02-19	Key 3
02-20	Key 4
02-21	Key 5
02-22	Key 6
02-23	Key 7
02-24	Key 8
02-25	Key 9
02-26	Most Popular key
02-27	Reset key
02-28	<> key
02-29	>< key
02-31	Multiple keys
02-32	Cancel button

Mechanism Controller (05)

05-05	Mech. cannot determine magazine position
05-08	EPROM checksum error
05-09	RAM test failed.
05-10	CDM communication invalid
05-25	Cause undetermined

Mechanism Fatal Errors

These error codes (05-50 through 05-64) will cause a system reset and after five errors, the phonograph will go out of order.

05-50	Inner cam switch
05-51	Inner cam switch
05-52	Outer cam switch
05-53	Outer cam switch
05-56	Index LED
05-57	Index LED
05-58	Home LED
05-59	Home LED
05-62	CDM-to-CCC communication lost
05-63	Mech-to-CCC communication lost
05-64	Gripper bow position undetermined

CBA-2 (06)

06-01	Communication to the CBA-2 has been lost
06-02	V1 cell or inlet cell
06-03	Jammed bill
06-04	Bill stacker is full
06-05	Cause undetermined

Wallbox Controller (07-10)

07-01	Communication to wallbox #1 has been lost
08-01	Communication to wallbox #2 has been lost
09-01	Communication to wallbox #3 has been lost
10-01	Communication to wallbox #4 has been lost

IR Remote (11)

11-01	Communication to the IR remote has been lost.

Central Control Computer (14)

14-01	EPROM checksum error
14-02	RAM failed
14-03	Real time clock error
14-04	Factory defaults have been loaded
14-05	RAM checksum error
14-06	Low battery

Description Of Errors/Warnings And Probable Causes

SOURCE 01 (COIN SWITCH WARNINGS)

WARN	01-17	#1 coin switch
	01-18	#2 coin switch
	01-19	#3 coin switch
	01-20	#4 coin switch
	01-31	Multiple coin switches

Message Means:

CCC thinks one or more coin switches are closed for more than 5 seconds.

Probable cause:

1. A manual operation of coin switches
2. A jammed coin or switch
3. A short in wiring
4. A defective CCC

SOURCE 02 (KEYBOARD WARNINGS)

WARN	02-16	Key 0
	02-17	Key 1
	02-18	Key 2
	02-19	Key 3
	02-20	Key 4
	02-21	Key 5
	02-22	Key 6
	02-23	Key 7
	02-24	Key 8
	02-25	Key 9
	02-26	MOST POPULAR key
	02-27	RESET key
	02-28	< > key
	02-29	> < key
	02-30	-------
	02-31	Multiple keys
	02-32	External CANCEL button

Message Means:

CCC thinks one or more switches were closed for more than 10 minutes.

Probable cause:

1. Someone held it closed. Nothing needs repairing or replacing.
2. A short in associated wiring *(see the Block Diagram in this section)*.
3. A defective CCC.

SOURCE 03—04 NOT DESIGNATED

SOURCE 05 (MECHANISM ERRORS/WARNINGS)

WARN 05-05

Message Means:

Both the Index and Home signals are changing, but the mechanism is unable to determine the magazine position.

Probable cause:

1. A defective optical switch
2. A loose connection wire/terminal at OPTICAL switch connector on the mechanism controller.
3. A defective mechanism control

WARN 05-08 EPROM checksum warning

Message Means:

Checksum test failed

Probable cause:

1. A failed EPROM
2. A defective mechanism contol.

WARN 05-09 RAM test failed

Message Means:

RAM test failure

Probable cause:

A defective RAM or mechanism control.

WARN 05-10 CDM communication invalid

Message Means:

The mechanism control is receiving invalid communications from the servoprocessor on the decoder board.

Probable cause:

1. Neon signs
2. RF signals from radio station(s), CB radio(s), arcing wires, etc.

Warn 05-25 Unspecified Warning

ERR 05-50	Inner Cam switch always closed
05-51	Inner Cam switch always open
05-52	Outer Cam switch always closed
05-53	Outer Cam switch always open

Message Means:

Mechanism control thinks a switch is not working.

Probable cause:

1. A switch
2. A wiring short or open
3. The mechanism control

ERR 05-56	Index LED always OFF
05-57	Index LED always ON
05-58	Home LED always OFF
05-59	Home LED always ON

Message Means:

Mechanism control thinks that the optical switch is defective.

Probable cause:

1. The optical switch
2. A wiring short or open
3. The mechanism control

ERR 05-62 CDM communication failure

Message Means:

The servo processor, on the decoder board, has stopped all communications with the mechanism control for 20 seconds.

Probable cause:

1. The decoder board is not getting power
2. A failure in the mech controller
3. A failure in the decoder board

ERR 05-63 Mech communication failure

Message Means:

The CCC has sent messages (via the Rowelink) to the mechanism controller, but the CCC has not received any response for one minute.

Probable cause:

1. Rowelink harness failure in the CCC harness
2. The mech control has failed
3. CCC (or a module that uses ROWELINK) has failed.

ERR 05-64

Message Means:

Both the inner and outer cam switches are operating, but the gripper bow position is uncertain.

Probable cause:

1. A defective cam switch
2. A loose connection in wire/terminal at cam switch
3. A defective mechanism control

SOURCE 06 (CBA-2 WARNINGS)

WARN 06-01

Message Means:

CBA-2 Communication failure

Probable Cause:

1. A loose connection in wire/terminal a the Rowelink communication line.
2. A defective CBA—2.

WARN 06-02

Message Means:

CBA-2 control unit thinks that the transport V1 cell is blocked.

Probable cause:

1. An object in transport covering V1 cell
2. A defective transport
3. A defective CBA-2

WARN 06-03

Message Means:

CBA-2 control unit thinks that a bill is jammed in the transport.

Probable cause:

1. An object is or was in transport activating anti-pullback lever.
2. A defective transport
3. A defective CBA-2

WARN 06-04

Message Means:

CBA-2 thinks that the bill stacker is full.

Probable cause:

1. The bill stacker is full
2. The bill stacker is jammed in the OFF HOME position
3. The bill stacker HOME switch is out of adjustment
4. A defective bill stacker
5. A defective CBA-2

WARN 06-05 Unspecified Warning

SOURCE 07 (WALLBOX ADDRESS 70)

WARN 07-01 CCC lost communication with wallbox or concentrator for more than 1 minute

SOURCE 08 (WALLBOX ADDRESS 71)

WARN 08-01 CCC lost communication with wallbox for more than 1 minute

SOURCE 09 (WALLBOX ADDRESS 72)

WARN 09-01 CCC lost communication with wallbox for more than 1 minute

SOURCE 10 (WALLBOX ADDRESS 73)

WARN 10-01 CCC lost communication with wallbox for more than 1 minute

Message Means:

Rowelink communications was established with this wallbox or concentrator then it was lost for more than 1 minute.

Probable Cause:

1. The Rowelink wiring to the concentrator (or wallbox)
2. A wallbox power supply
3. A wallbox or concentrator

SOURCE 11 (IR REMOTE WARNING)

WARN 11-01 IR Remote communication failure

Message Means:

Rowelink communications was established with the IR remote then was lost for more than 1 minute.

Probable Cause:

1. Defective Rowelink harness between the P1O of the CCC and P6 of the IR Remote.
2. Defective power harness between P1 of the CCC and P4 of the IR Remote.
3. Defective IR Remote assembly.

SOURCE 12-13 NOT DESIGNATED

SOURCE 14 (INTERNAL CCC WARNINGS)

14-01	CCC EPROM checksum test failed
14-02	CCC RAM test failed
14-03	CCC real-time clock failure
14-04	CCC factory defaults requested and loaded
14-05	CCC programmed RAM checksum test failed
14-06	CCC battery voltage is low

Message Means:

All except 04 indicate a CCC internal fault. The 04 indicates factory defaults were loaded into programmed RAM because: someone used the factory load procedure (see replacing the EPROM).

Probable cause:

1. A defective CCC for all except 04
2. A defective CCC if 04 occurs frequently
3. Someone loaded factory defaults, causing 04 warning.

CLEARING ERROR/WARNINGS FROM MEMORY

Error/warnings stored in the phonograph's memory can be cleared by:

STEPS	DISPLAY SHOWS
1. Enter SERVICE mode	-- ERRORS EXIST --
2. Press 8.	* STATUS *
3. Press 1.	* CLEAR ERRORS *
4. Press POPULAR.	CLEAR ERRORS (Will blink and then reappear)

NOTE:

If already in SERVICE mode, or you want to start over, hold RESET and repeatedly press POPULAR until display shows * SERVICE MODE *. Then start at step 2.

DISC CONDITIONS

Basic Concepts

Compact Discs are very rugged, but sometimes they develop problems similar to vinyl records. Skips and dropouts are not uncommon CD faults and may be caused by: a dirty disc, dirty CD player lens, or CD manufacturing defects. On rare occasions, the CD player may be unable to play any tracks on a disc. This failure to play any tracks may have the same cause as skips and dropouts.

Programmable Disc Condition Logging

The CD-100C has a built-in disc condition logging feature that records disc play problems found on a disc or track. Three programmable options determine when these conditions are placed into the Disc Condition Log:

SKIP LOG (SERVICE CODE 35)

The number of skips, over one second, to occur before recording the error in the condition log. The recommended setting is 3.

SKIP CANCEL (SERVICE CODE 36)

The number of skips, greater than one second, to occur before recording the error in the condition log and canceling the selection. The recommended setting is 5.

TIME CANCEL (SERVICE CODE 37)

The absolute time difference, in seconds, between the current playing position, coming off the CD, and the running time. The recommended setting is 10.

Factory Settings

The factory settings for the SKIP LOG, SKIP CANCEL, and TIME CANCEL are 99. The reason for the difference between defaults and recommended settings is that we want the CD-100C, when shipped, to play discs of practically any condition without early canceling.

Non-Programmable Disc Condition Logging

Four non-programmable disc condition events are also recorded in the condition log. These events are:

LOGGED TRACK NUMBER EQUALS 00

This entry in the log means that the CD player was unable to read the CD Table Of Contents (TOC).

NOTE:

The TOC is read every time the disc is placed on the turntable. The TOC contains the location of each track on the disc, so without it the player is unable to play any track.

LOGGED CANCL AND SKIP EQUALS 99

This entry means that the CD player was able to read the TOC, but was unable to locate the track.

LOGGED CANCL EQUALS 99 AND SKIP EQUALS 77

This means the disc stopped spinning while playing

LOGGED CANCL EQUALS 99 AND SKIP EQUALS 88

This means tracking was lost when the disc was playing

The CD-100C has an automatic method to lock out selections that have logged too many errors. You can set this number of condition occurrences to any number from 1 to 99. Once the LOCKOUT COUNT, Code 693, has exceeded the number of occurrences on a selection, that selection is automatically placed into LOCKOUTS list, Code 60. To remove a condition generated lockout, *refer to the Section 2* on editing the Lockout List or reinitialize the disc when using menu command 31.

Viewing Disc Conditions

Steps	Display Shows
1. Enter SERVICE mode.	* SERVICE MODE *
2. Type 8.	* STATUS *
3. Type 6.	DISC CONDITIONS
4. Press POPULAR	- NO CONDITIONS **-OR-** SEL ditr OCC oo The small letters mean: di - Disc number tr - Track number oo - Number of occurrences
5. Hold RESET, press 9	CANCL tt SKIP ss tt - Absolute time difference, in seconds, when the condition was logged. ss - Number of skips, greater than one second in duration, when the condition was logged.
6. Hold RESET, press 9	TIME hh:mi mo/dd hh - Hour when last condition occurred. mi - Minute when last condition occurred. mo - Month when last condition occurred. dd - Day when last condition occurred.

7. Hold RESET, Press 3 to view next disc condition.

8. Hold RESET, Press 2 to view previous disc condition.

9. Repeat steps 5, 6, 7, and 8 as often as necessary.

Example 1:

SEL 1500 OCC 05
CANCL 00 SKIP 00
TIME 12:15 7/19

Condition Means

The CD player could not read the TOC (track number equals 00) of disc 15 on 5 selected occasions. The most resent condition was logged on July 19th at 12:15 (24 hour time).

Probable Cause

1. Disc installed backward.
2. Absent disc. This disc location may not have been initialized, allowing it to be accidentally selected.
3. Dirty disc. For this type of a condition the dirt would be located around the inner most diameter of the disc. This is where the TOC information is located.
4. Dirty CD player LASER lens. Expect to see various conditions logged on many of the discs selected *(see CD Player Lens in Section 3 for details).*

Remedy

1. Check to see if the disc was inserted backward. If inserted backward, re-install it correctly and initialize that disc.
2. Check to see if the disc is present. If not present, initialize that disc location.
3. Remove the disc from the magazine, then inspect the inner diameter, TOC area, for dirt or damage. If you find dirt or damage clean it up. See disc cleaning section. Clear out the conditions and select a track on this disc to see if the CD player is able to read the TOC. If the CD player is still unable to read the TOC, try further cleaning or replace the disc.
4. Clean the CD player LASER lens *(see CD Player Lens in Section 3 for details).*

Example 2:

SEL 1505 OCC 01
CANCL 99 SKIP 99
TIME 12:30 7/12

Condition Means

The CD player read the TOC successfully, but was unable to start playing the track (no music would have been heard) on 1 occasion. The most resent condition was logged on July 12th at 12:30 (24 hour time).

Probable Cause

1. The disc is dirty. For this type of a condition the dirt would be located some where between the inner most diameter of the disc and the track selected. See disc cleaning section.

2. Dirty CD player LASER lens. Expect to see various conditions logged on many of the discs selected *(see CD Player Lens in Section 3 for details).*

Remedy

1. Remove the disc from the magazine, then inspect it for dirt or damage. If you find dirt or damage clean it up. See disc cleaning section. Clear out the conditions and select 1505 again to see if the CD player is able to play it. If the CD player is still unable to play it, try further cleaning, lock out tracks 5 and greater on disc 15, or replace the disc.

2. Clean the CD player LASER lens *(see CD Player Lens in Section 3 for details).*

Example 3:

SEL 2302 OCC 01
CANCL 10 SKIP 3
TIME 23:30 5/20

Condition Means

1. The CD player was playing selection 2302, but while it was playing 3 skips occurred, skips over 1 second, with an overall time loss of 10 seconds on 1 occasion. The most resent condition was logged on May 20th at 23:30 (24 hour time).

Probable Cause

1. Dirty disc. For this type of a condition the dirt would be located some where within track 2.

2. Dirty CD player LASER lens. Expect to see various conditions logged on many of the discs selected *(see CD Player Lens in Section 3 for details).*

3. An outside jarring of the jukebox.

Remedy

1. Remove the disc from the magazine, then inspect it for dirt or damage. If you find dirt or damage clean it up. See disc cleaning section. Clear out the conditions and select 2302 again to see if the CD player is able to play it. If the CD player is still unable to play it, try further cleaning, lock out track 2 on disc 23, or replace the disc.

2. Clean the CD player LASER lens *(see CD Player Lens in Section 3 for details).*

Clearing Disc Conditions From Memory

Disc condition messages stay in memory until you perform the following steps:

NOTE:

If already in SERVICE **mode, or you want to start over, hold** RESET **and repeatedly press** POPULAR **until display shows** * SERVICE MODE *. **Then start at step 2.**

STEPS	DISPLAY SHOWS
1. Enter SERVICE mode	* SERVICE MODE * or -- ERRORS EXIST --
2. Press 8.	* STATUS *
3. Push 7.	* CLEAR CONDITIONS *
4. Press POPULAR.	CLEAR CONDITIONS (will blink and then reappear)

TROUBLESHOOTING CHARTS

One of the best ways to isolate a problem is to determine the exact state of the phonograph when the failure occurs. This means recording the condition of digital display, STATUS LED's, gripper bow, detent pawl, magazine, cam switches, etc.

This information can help you identify the cause of intermittent or continuous failures.

Refer to figure 5-2 for descriptions and locations of the LED's referred to in *the Modular Troubleshooting Chart that follows in table 5-2.*

The chart has the following three columns:

- The trouble column lists different types of failures.
- The symptom column shows the state of the phonograph when the failure occurs.
- The last column shows the probable cause.

Refer to figure 5-1, the Block Diagram for harnessing information.

Table 5-2. Modular Troubleshooting Chart

Trouble	Symptom	Probable Cause
Phonograph fails to operate when power is turned ON	LED's on power supply and fluorescent lights fail to light	1. Rear power switch OFF 2. Plug not in wall 3. Wall circuit is dead 4. 10 amp circuit breaker tripped 5. Wiring to rear power switch 6. Rear power switch
	LED's on power supply fail to light but fluorescent lamps are ON	1. 2 amp circuit breaker tripped 2. Power supply 3. 28 VAC overload from magazine, transfer or T.T. motor
	The +8 VDC or +28 VDC LED on power supply fails to light but lights when phono harness at power supply is unplugged	1. Central control computer 2. Mechanism control 3. Digital display 4. Title Rack/Keyboard Interface 5. Power Supply 6. Service switch 7. Short circuit in wiring 8. Detent coil 9. Money or play counter

NOTE:

To locate the problem, reconnect the phono harness and unplug the connectors in the order shown in the following 10 steps. If the LED lights, replace the last module unplugged or repair the short in the harness.

Table 5-2. Modular Troubleshooting Chart

Trouble	Symptom	Probable Cause
Phonograph fails to operate when power is turned ON	The +8 VDC or +28 VDC LED on power supply fails to light but lights when phono harness at power supply is unplugged	1. Digital display module (P1) 2. Harness at the CCC (P5) 3. Title Rack/Keyboard Interface Module (P1) 4. Harness at CCC (P1) 5. Harness at mechanism control (P12 and P6). Check harnesses, detent coil, and counters. 6. Mechanism control module (P7) 7. Harness at CCC (P2) 8. CCC module (P3) 9. Check power switch and wiring between it, the power supply, and CCC (P3). 10. Replace the power supply or the circuit board inside it.
	CCC ROWELINK COMMAND LED is always OFF or always ON (not flickering)	Central control computer
	CCC ROWELINK COMMAND LED flickering 4 times a second and the display shows OUT OF ORDER, and Error A ERR 05-63 is logged in	1. If the mechanism ROWELINK TX LED is flickering, the cause is: a. mech control b. open wiring in mechanism 2. If the mechanism ROWELINK TX LED is not flickering, the cause is: a. mechanism control b. CBA-2 c. a short in the ROWELINK wiring

Table 5-2. Modular Troubleshooting Chart

Trouble	Symptom	Probable Cause
NOTE: The CCC sends OUT OF ORDER to the display and logs the A ERR 05-63 Error one minute after power up if it cannot establish Rowelink communication with the mechanism control and the phonograph is in the NORMAL mode (i.e. not SERVICE). To isolate the problem to a module or its associated Rowelink wiring, put the SERVICE switch in the SERVICE position and unplug the connectors in the following order. If the mechanism ROWELINK TX (TRANSMIT) LED starts flickering, replace the last module unplugged or repair the short in the harness. If the LED never starts flickering, the cause is a defective mechanism control, CCC, or a short in the Rowelink harness between them. 1. Unplug the CBA- 2.		
Magazine does not rotate when a selection is made	SCAN/TRANSFER LED ON, detent is actuated	1. Power supply 2. Wiring to mag. motor 3. Magazine motor 4. Mech control board
	SCAN/TRANSFER LED OFF	1. Mech control board 2. Central control computer 3. Wiring from central control computer to mech control board
Magazine rotates continuously	SCAN/TRANSFER LED OFF	1. Wiring to magazine motor 2. Mech control board

Table 5-2. Modular Troubleshooting Chart

Trouble	Symptom	Probable Cause
Magazine rotates continuously *(cont'd)*	SCAN/TRANSFER LED is ON, OPT. SW. INDEX LED is not flashing, and/or OPT. SW. HOME LED does not flash at Disc Number 99.	1. Optical switch 2. Wiring to optical switch 3. Mech control board
	SCAN/TRANS LED ON and both optical switch LED's normal	Mech control board
Magazine stops at wrong disc	Stops at random CD anywhere in magazine	1. Faulty optical switch 2. Wiring to optical switch 3. Heavy dirt buildup in optical switch
	Stops one or two discs before disc selected	1. Optical switch adjustment 2. Magazine not full of CD's (out of balance) 3. Broken sprag lever guide
	Stops one or two discs after disc selected	1. Faulty optical switch 2. Optical switch adjustment 3. Magazine not full of CD's (out of balance) 4. Broken sprag gear 5. Sprag linkage binding
	Stops one-Half to one disc position off before or after disc selected	1. Broken sprag gear 2. Broken sprag guide 3. Sprag linkage binding or needs adjustment

Table 5-2. Modular Troubleshooting Chart

Trouble	Symptom	Probable Cause
Disc does not transfer	SCAN/TRANSFER LED is ON	1. Wiring to transfer motor 2. Mech control board 3. Transfer motor
	SCAN/TRANSFER LED is OFF	1. Mech control board 2. Central control computer 3. Wiring from central control computer to mech control board
Transfer starts when power is applied and runs continuously	SCAN/TRANSFER LED is OFF	1. Mech control board 2. Wiring to motor
	SCAN/TRANSFER LED is ON	1. Mech control board 2. Open circuit at inner cam switch N.O. contact 3. Open circuit at inner cam switch Common 4. Outer cam switch N.O. shorted to Common
Transfer starts and runs continuously after selection is located	SCAN/TRANSFER LED comes ON when motor starts and stays ON	1. Wiring to outer cam switch 2. Outer cam switch 3. Mech control board 4. Inner cam switch N.O. contact shorted to Common. 5. Open circuit in outer cam switch Common
No sound	Always muted	1. Central control computer 2. Amplifier
Motor noise in speakers	Never muted	1. Central control computer 2. Wiring between CCC and amplifier 3. Amplifier

Table 5-2. Modular Troubleshooting Chart

Trouble	Symptom	Probable Cause
All discs cancel without playing	Disc spins but will not play	1. Short in cancel switch wiring 2. Cancel switch 3. Mech control board 4. CD player 5. Bad/upside down disc
	Disc will not spin	1. Mech control board 2. CD player 3. Wiring between the CD player and the mech control
Some discs cancel without playing		1. Defective discs (check disc conditions) 2. Mechanism control 3. CD player
Money counter or play counter fails to count	Fails to count	1. Wiring to counter 2. Counter 3. Mech control board
Phonograph is always in SERVICE mode of operation	* SERVICE MODE * is always displayed after power up	1. SERVICE switch 2. SERVICE switch wiring 3. Central control computer 4. Central control computer set for programming with the front door closed (the VOID SERVICE SWITCH option is ON)
Phonograph will not go into SERVICE mode	Display will not show * SERVICE MODE * or ERRORS EXIST when SERVICE switch is in SERVICE	1. Central control computer 2. SERVICE switch wiring 3. SERVICE switch

Table 5-2. Modular Troubleshooting Chart

Trouble	Symptom	Probable Cause
Some CD's Skip		1. Dirty discs or dirty lens on CD player (see *table 3-3* for lens cleaning procedure) 2. Defective discs (check disc conditions) 3. Mechanism control 4. CD player
All CD's skip		1. Dirty lens on CD player (see *table 3-3* for lens cleaning procedure) 2. CD player 3. Mechanism control
No credit	No credit given by coins and dollar bills	Central control computer
	No credit given by coins but dollar bill gives credit	1. Coin switch Common wiring 2. Central control computer
	One value of coin will not give credit	1. Coin rejected 2. Wiring to coin switch 3. Coin switch 4. Central control computer
	Dollar bill will not give credit	1. Bill acceptor 2. Wiring to bill acceptor 3. Central control computer
Wrong credit	Credit for amount deposited does not agree with price card setting	1. One or more coins or bills did not register (*see No Credit*). 2. Central control computer programmed incorrectly. 3. Central control computer
System does not respond to keyboard	0 Credits on SELECTION REMAINING display	Insufficient credit

Table 5-2. Modular Troubleshooting Chart

Trouble	Symptom	Probable Cause
System does not respond to keyboard *(cont'd)*	Credits remain, but entire keyboard does not work	1. Shorted keyboard switch 2. Central control computer 3. Short in keyboard wiring
	Credits remain, but certain keys do not work	1. Wiring from keyboard to title rack/keyboard interface 2. Keyboard 3. Title rack/keyboard interface 4. Central control computer
Digital display does not work	Display lights, but shows wrong information	1. Digital display 2. Central control computer
Title pages do not operate normally	Title pages do not move at all or movement is very slight	1. Mechanical jam in the mechanism—Try to rotate the motor by hand—Disassemble to locate the jam. 2. The motor will not run—faulty motor—test for voltage at the motor—Try rotating the motor by hand. Remove the motor and test it. 3. The switches are not adjusted properly—Adjust according to the procedure in *Section 6*. 4. The title page harness is not plugged in.
	Two pages on a side try to turn at the same time	The metal fingers on the back of the top of the page are bent because the pages were forced. Remove the racks from the back side of the assembly—Inspect the metal fingers and straighten any bent fingers.

Table 5-2. Modular Troubleshooting Chart

Trouble	Symptom	Probable Cause
Title pages do not operate normally *(cont'd)*	Pages continue to flip past the next page	1. Index switch on the title display is defective or out of adjustment. 2. Harness between title display and P6 of the title rack/keyboard interface. 3. Harness between P3 of the title rack/keyboard interface and P5 or P15 of the central control computer. 4. Defective title rack/keyboard interface module. 5. Defective central control computer.
	Cannot get the desired page	1. PAGE IN/OUT limits are not set correctly—*See Section 2.* 2. Limit switch on the title display is defective or out of adjustment. 3. Harness between the title display and J5 of the digital display. 4. Harness between J3 of the digital display and P5 or P15 of the central control computer. 5. Defective digital display module. 6. Defective central control computer.

Table 5-2. Modular Troubleshooting Chart

Trouble	Symptom	Probable Cause
Title pages do not operate normally *(cont'd)*	Pages do not operate from keyboard OUT/IN switches or from the titles OUT/IN switch	1. Defective title motor. 2. Defective digital display module. 3. Defective central control computer. 4. Harness between title display and P6 of the title rack/keyboard interface. 5. Harness between P3 of the title rack/keyboard interface and P5 or P15 of the central control computer. 6. Defective keyboard. 7. Harness between J1 of the keyboard and J4 of the digital display.
	Pages do not operate from the keyboard OUT/IN switches, but do operate from the titles OUT/IN switch	Defective keyboard
	Pages do not operate from the titles OUT/IN switch, but do operate from the keyboard OUT/IN switches	1. Defective titles OUT/IN switch 2. Harness between titles OUT/IN switch and J2 of the keyboard. 3. Defective keyboard.
Miscellaneous problems	Any malfunction not described above	1. Main power supply 2. Central control computer

SOUND SYSTEM QUICK CHECK

Rowe solid state sound systems are service designed for fast, easy repair. The following check list will enable you to locate troubles with basic tools. *Refer to figures 5-1 and 5-4 as needed.*

WARNING:

Do not plug in or unplug circuit boards with power ON. Checks should be made with the changer in the disc playing position. Perform all service checks in the order listed.

No Sound — Both Channels

POWER - SECOND LEVEL

1. Check that the amplifier is plugged-in and is receiving power from the power supply.

2. Disconnect the mute plug.

3. Press the circuit breaker reset pushbutton on the amplifier chassis to make sure that it is not tripped. The amplifier should cause an audible "thump" in the speakers when its power is turned ON.

VOLUME CONTROL

Disconnect the volume control plug from the amplifier chassis and short out Pin 3 (Common) to Pins 1, 2 and 4, 5. Full volume indicates an open volume control or line. If full volume at all times is the problem and disconnecting the volume control plug does not kill the sound, replace the preamp board.

No Sound, Low Sound Or Distorted Sound Right Or Left Channel Only

EXTENSION SPEAKERS

Check the OVERLOAD indicators (*see figure 1-6*), then disconnect the extension speakers from the transformer package receptacle (*figure 1-7 also*) and look at the OVERLOAD indicators again. If either or both OVERLOAD indicators were ON, but are now OFF, the overload is in the extension speakers.

Check that the phonograph is not overloaded by performing the following five steps:

1. Make sure that the phonograph and extension speakers are connected to the proper speaker taps.

2. On the amplifier, set all seven RIGHT CHANNEL and all seven LEFT CHANNEL graphic equalizer controls fully counter-clockwise.

3. Set the volume control fully clockwise (maximum volume) and make a selection.

4. While the music is playing, an acceptable load will allow the OVERLOAD INDICATORS(S) to be off or occasionally flicker in a random manner. If the OVERLOAD INDICATOR(S) are always lit or flicker continuously, the amplifier is overloaded and you must perform *Step 5*.

5. Do this step only if the OVERLOAD INDICATOR(S) came on as described in the previous step. Find the source of the overload (shorted speaker wires, too many speakers connected, or speaker power taps too high). After you fix the short, disconnect a few speakers, or lower the speaker power tap selection; repeat *Step 4*.

OUTPUT DEVICES

Visually inspect the driver board for blown fuses. If a fuse is blown, replace the associated output device. The two devices used in each channel are not interchangeable. Check the part number on the case and install an identical or equivalent replacement. Before mounting the device onto the heat sink, be sure that the heat sink surface is flat and no burrs are around the mounting holes to cause a short. Be sure that one, and only one, mica insulator is between the device and the heat sink and heat transfer compound (*Rowe Specification 0-00053-00*) is on both sides of insulator.

FILTER CAPACITORS

Check for plus and minus 40 VDC in the amplifier power supply. Connect the negative meter lead to ground and check the voltage at the terminals of the large electrolytic filter capacitors located on the amplifier chassis next to the power transformer. When taking readings on the capacitor with the outer shell isolated from chassis to one of the shell tabs, check that the voltage on each capacitor terminal is the same. A lowered voltage at one of the capacitor pins indicates that the capacitor may be defective and should be replaced, or that the bridge rectifier is defective. Another indication of defective filter capacitors is excessive hum in the sound output.

PREAMP OUTPUT

Short all five of the volume control pins located on amp. Press your finger against Pins 1 or 3 (outside pins) labeled PHONO CARTRIDGE INPUT, and check for approximately 1 VAC at preamp output (Pins 3 or 5 of 13 pin connector to chassis Common). Replace the preamp board if voltage is not present. If voltage is present check the center pin of the output driver board for approximately 16 VAC. If voltage is not present, make sure your finger is pressed against the same outside pin with respect to the channel that is being checked with the voltmeter.

DRIVER BOARDS

If one driver board is defective, switch the input to "Mono" and use the good channel temporarily.

Constant High Volume — Cannot Adjust

VOLUME CONTROL

Disconnect volume control plug from amplifier chassis. No sound indicates a short in the volume control line or the volume control connector is plugged in backwards. White/violet wire should be closest to heatsink.

PREAMP

If full volume is heard with control plug disconnected, replace the preamplifier board.

Excessive Hum

OPEN SHIELD

Be sure that shield or wires are not broken between CD player and the amplifier input plug.

FILTER CAPACITORS

Check filter capacitor, parallel an extra 500 Mfd. 50V capacitor in chassis. If hum drops; replace the capacitor. If external inputs are used, the equipment driving those inputs must not be tied to Earth Ground.

This page intentionally left blank.

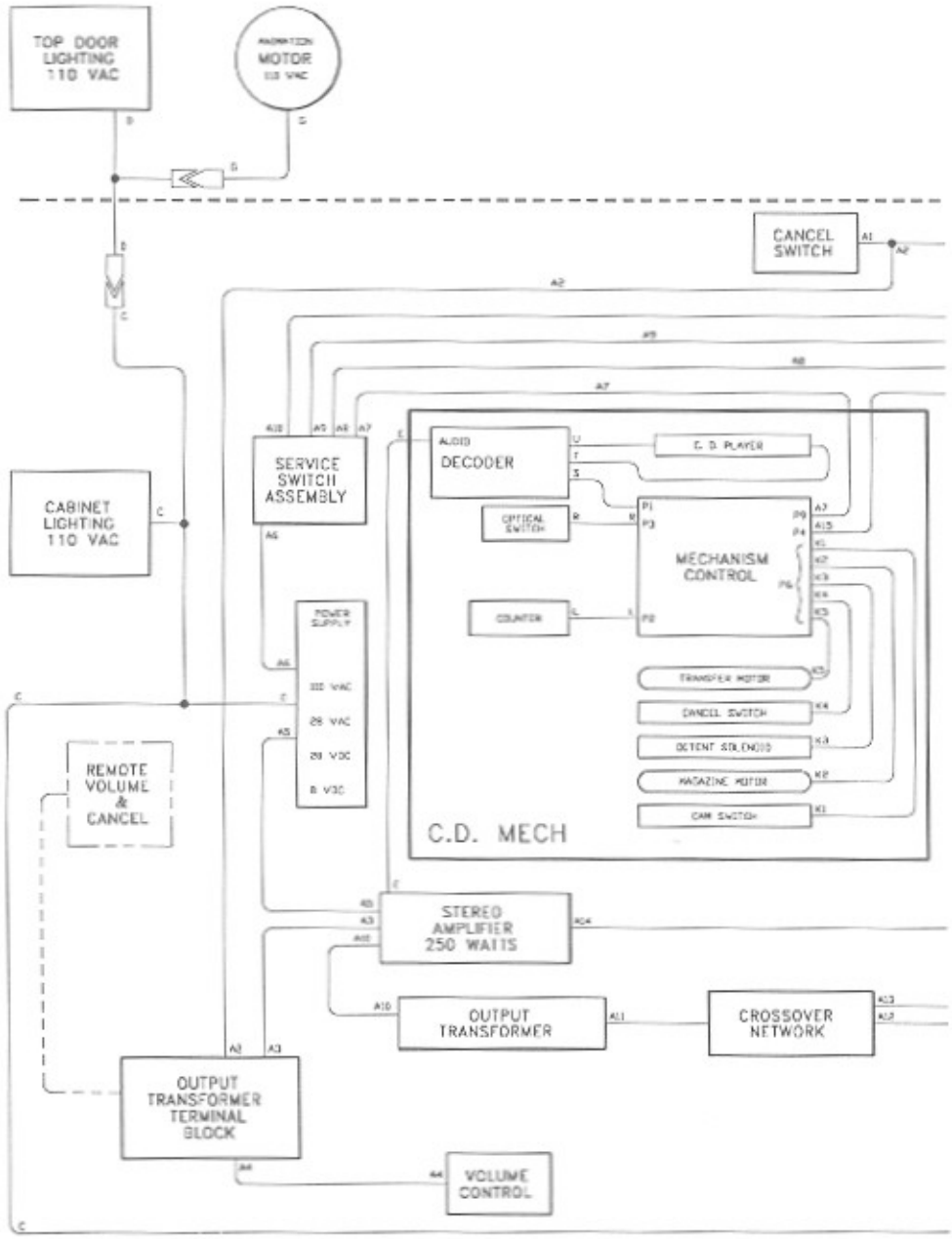
TOP DOOR LIGHTING 110 VAC
MOTOR
CANCEL SWITCH
SERVICE SWITCH ASSEMBLY
AUDIO DECODER
C. D. PLAYER
OPTICAL SWITCH
MECHANISM CONTROL
COUNTER
CABINET LIGHTING 110 VAC
POWER SUPPLY
28 VAC
28 VDC
8 VDC
TRANSFER MOTOR
CANCEL SWITCH
DETENT SOLENOID
MAGAZINE MOTOR
CAM SWITCH
C.D. MECH
REMOTE VOLUME & CANCEL
STEREO AMPLIFIER 250 WATTS
OUTPUT TRANSFORMER
CROSSOVER NETWORK
OUTPUT TRANSFORMER TERMINAL BLOCK
VOLUME CONTROL

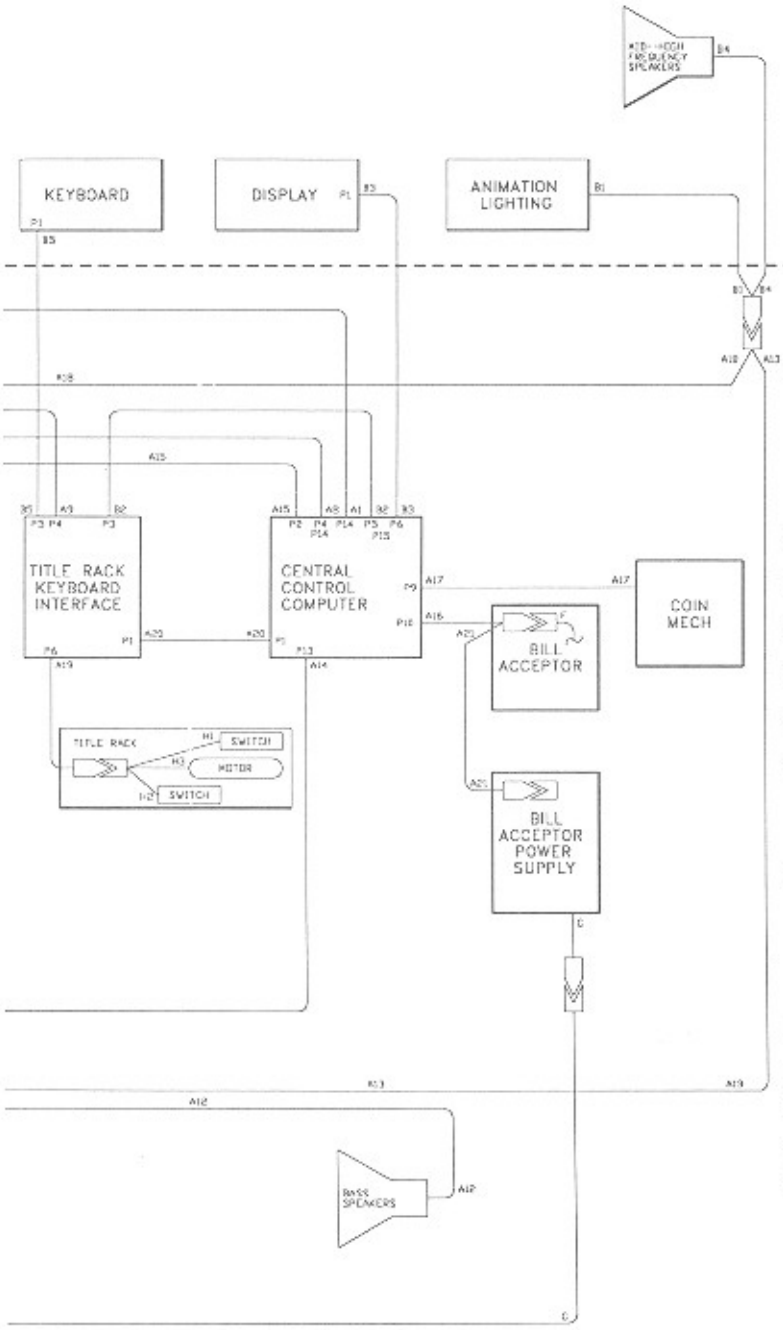

A → HARNESS & SWITCH ASSY 61060901

1. Cancel To Computer
2. Cancel Line To Terminal Block
3. Remote Volume & Volume Control From Amplifier
4. Volume Control
5. 110 VAC To Amplifier
6. Low Voltage Power To Switch
7. 28 VAC To CD Player
8. Low Voltage Power To Computer
9. Page Control To Title Rack / Keyboard Interface
10. Amplifier Output (Audio)
11. Audio Output To Crossover
12. Audio Output To Bass Speakers
13. Audio Output To Mid-High Frequency Speakers
14. Mute
15. Signal & VDC Power To CD Player
16. Signal To Bill Acceptor
17. Signal-Coin Mechanism
18. 28 VAC Power To Animation Lighting
19. Signal And Power To Title Rack
20. VDC Power To The Title Rack / Keyboard Interface
21. VDC Power To Bill Acceptor

B → HARNESS ASSY - DISPLAY 40855101

1. 28 VAC Power To Animation Lighting
2. Signal And VDC Power To Title Rack Keyboard Interface
3. Signal And VDC Power To Display
4. Audio Input To Mid-High Frequency Speakers
5. Signal To Keyboard

C → HARNESS ASSY - 110 VAC 60/50 HZ . . 40854301/02

D → HARNESS ASSY - TOP DOOR LIGHTING . 40855201

E → CABLE ASSEMBLY - AUDIO 30934203

F → HARNESS ASSEMBLY - CBA-2 35127401

G → MOTOR & HARNESS ASSY 40824302

H → HARNESS ASSY - INTERCONNECT 30938501

1. Switch - Signal To Title Rack / Keyboard Interface
2. Switch - Signal To Title Rack / Keyboard Interface
3. Motor Power From Title Rack / Keyboard Interface

K → HARNESS ASSY - CD MECH. 40830002

1. Cam Switch . . . . . To Mech. Control
2. Magazine Motor . . . . . To Mech. Control
3. Detent Solenoid . . . . . To Mech. Control
4. Cancel Switch . . . . . To Mech. Control
5. Transfer Motor . . . . . To Mech. Control

L → COUNTER & PLUG ASSEMBLY 30933301

R → OPTICAL SWITCH ASSEMBLY. 30906801

S → HARNESS DECODER - RIBBON CABLE 21959501

T → HARNESS ASSEMBLY - LASER (14 WIRE) 30955601

U → HARNESS ASSY - PLAYER MOTOR (4 WIRE) 30955501

Figure 5-4. CD-100C Harness Diagram

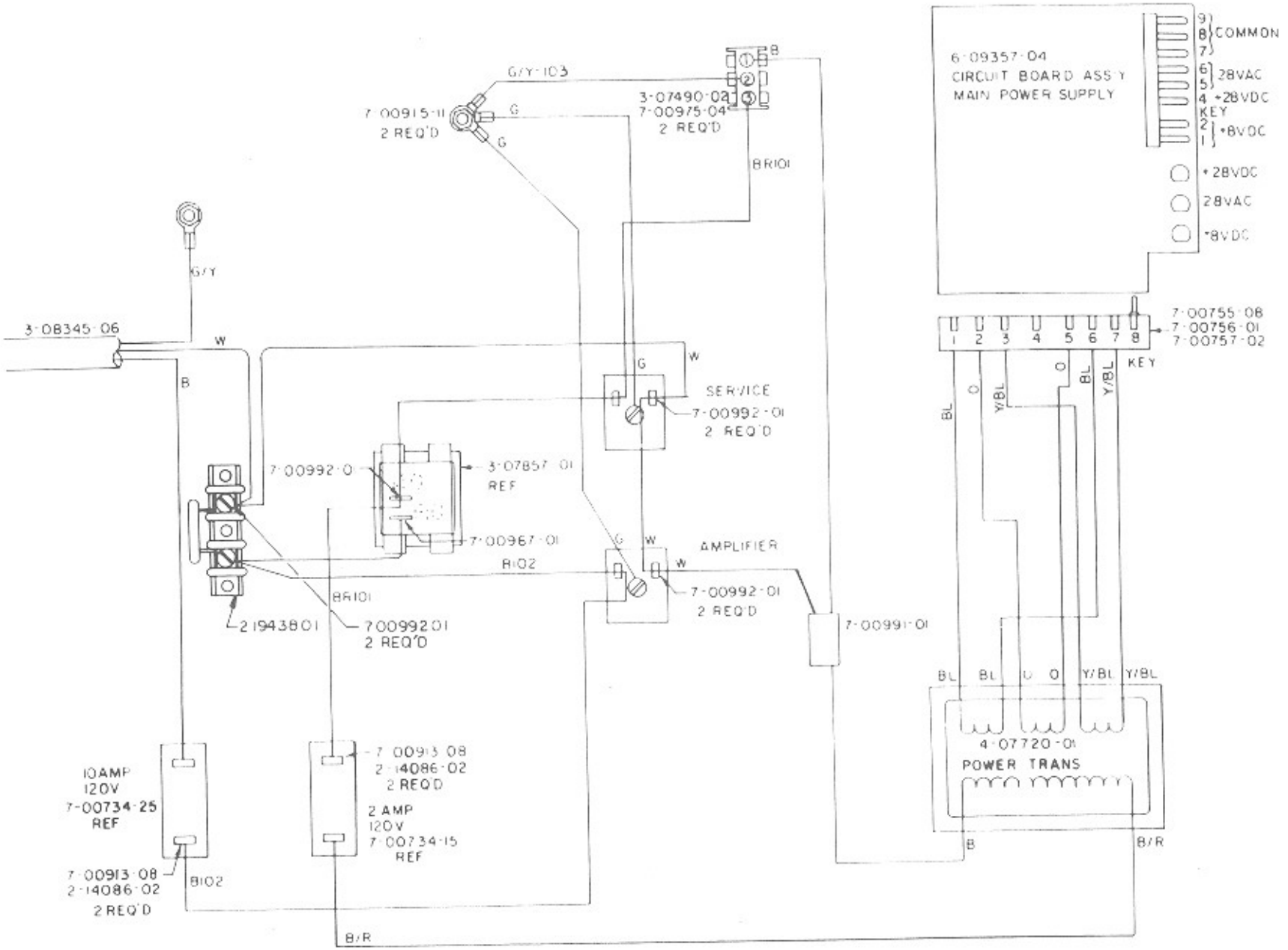

For Equivalent Engineering Drawing See 40770609-Q1 A

Figure 5-5A. Main Power Supply Wiring Diagram - Domestic

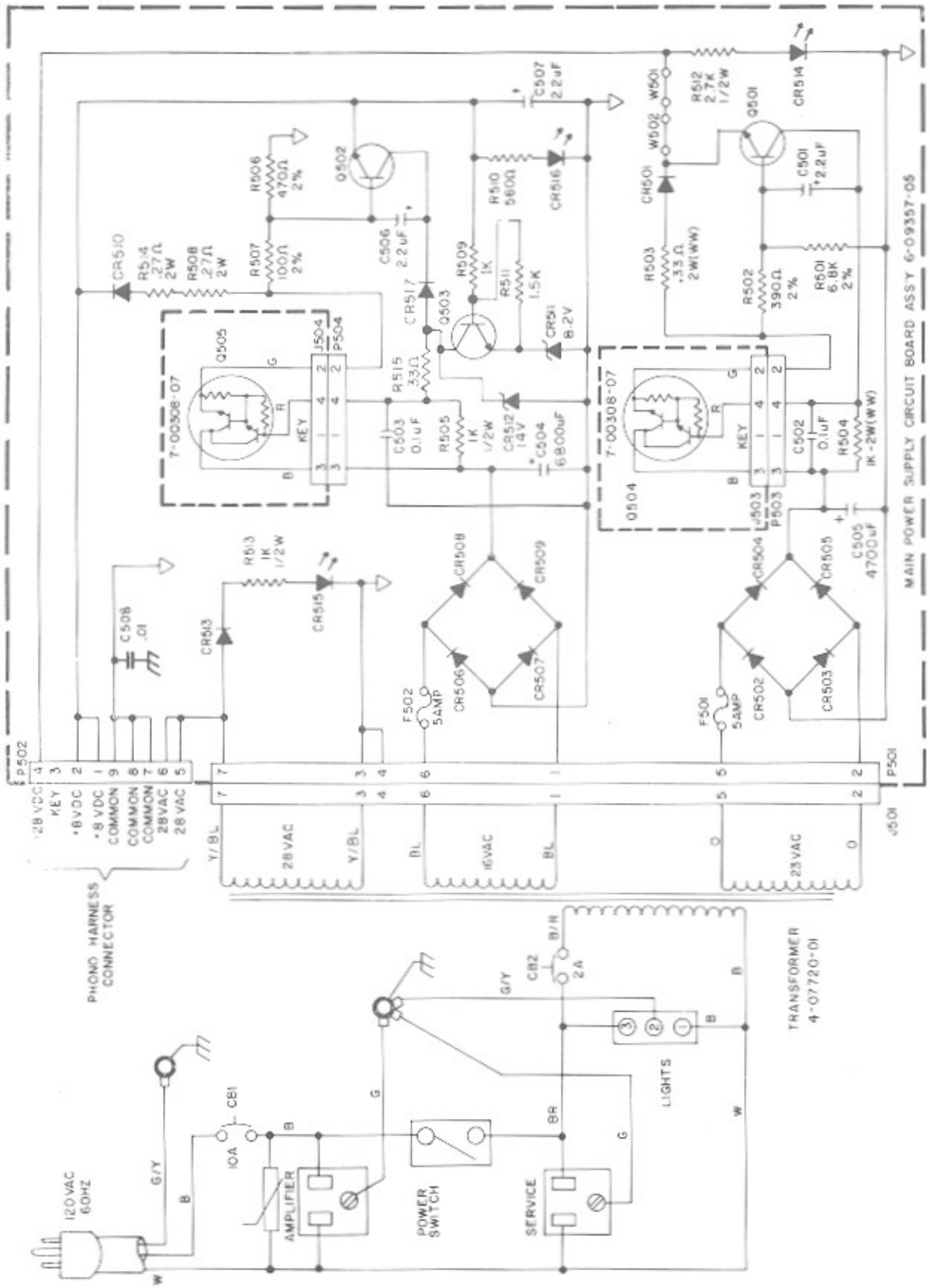

Figure 5-5B. Main Power Supply Schematic - Domestic

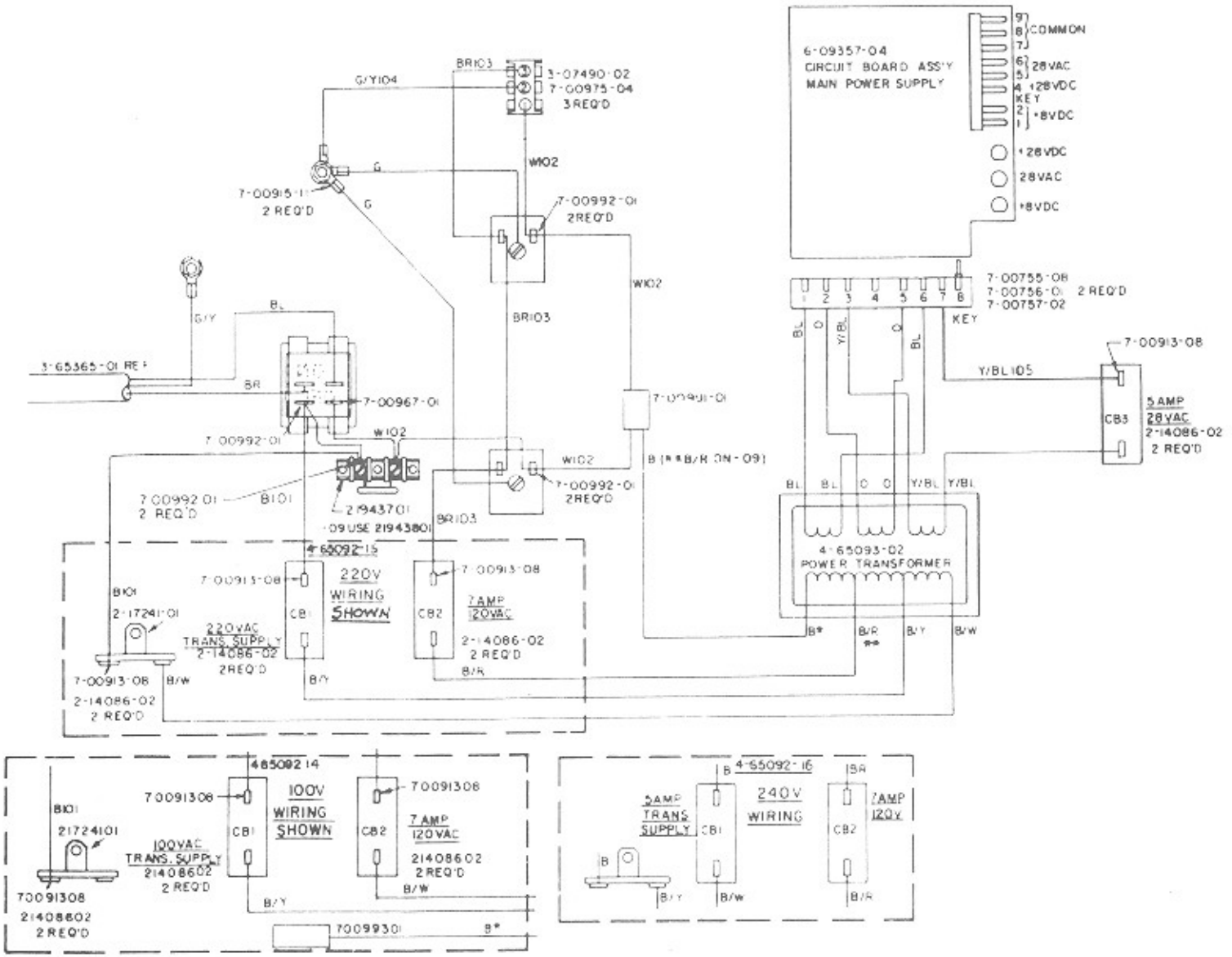

For Equivalent Engineering Drawing See 46509214/15/16-Q1 B

Figure 5-6A. Main Power Supply Wiring Diagram - Export

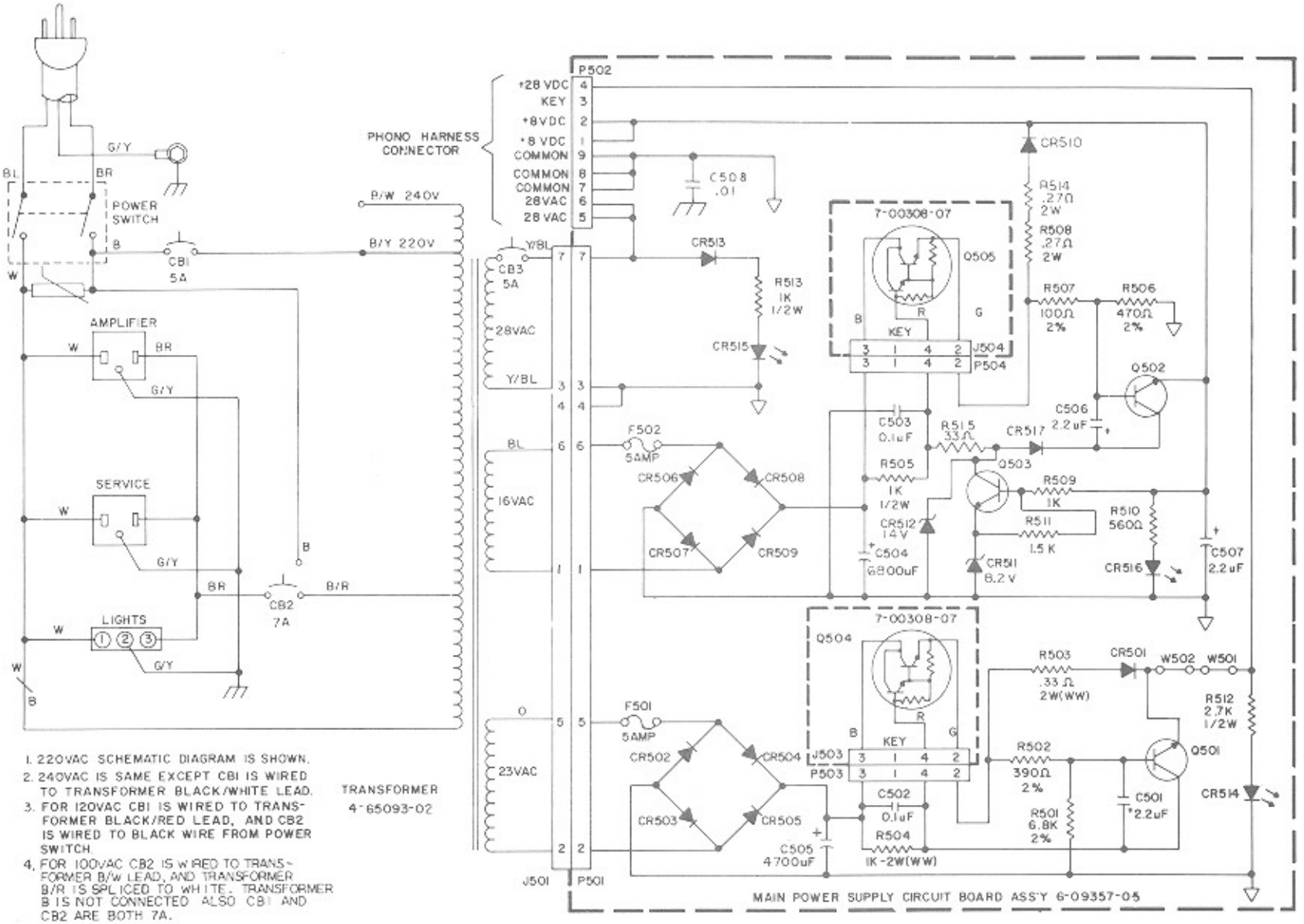

1. 220VAC SCHEMATIC DIAGRAM IS SHOWN.
2. 240VAC IS SAME EXCEPT CB1 IS WIRED TO TRANSFORMER BLACK/WHITE LEAD.
3. FOR 120VAC CB1 IS WIRED TO TRANSFORMER BLACK/RED LEAD, AND CB2 IS WIRED TO BLACK WIRE FROM POWER SWITCH.
4. FOR 100VAC CB2 IS WIRED TO TRANSFORMER B/W LEAD, AND TRANSFORMER B/R IS SPLICED TO WHITE. TRANSFORMER B IS NOT CONNECTED ALSO CB1 AND CB2 ARE BOTH 7A.

46509214 IS 100VAC
46509215 IS 220VAC
46509216 IS 240VAC

SCHEMATIC DIAGRAM-MAIN POWER SUPPLY

For Equivalent Engineering Drawing See 46509214/15/16-Q2 E

Figure 5-6B. Main Power Supply Schematic - Export

COMPONENTS LIST FOR
MAIN POWER SUPPLY CIRCUIT BOARD 60935705

C501	CAPACITOR - ELECTROLYTIC	2.2µF @ 50V	70023805
C502	CAPACITOR - MONOLYTHIC CERAMIC	0.1µF @ 50V	70028511
C503	CAPACITOR - MONOLYTHIC CERAMIC	0.1µF @ 50V	70028511
C504	CAPACITOR - ELECTROLYTIC	6800µF @ 35V	70023601
C505	CAPACITOR - ELECTROLYTIC	4700µF @ 50V	70023604
C506	CAPACITOR - ELECTROLYTIC	2.2µF @ 50V	70023805
C507	CAPACITOR - ELECTROLYTIC	2.2µF @ 50V	70023805
C508	CAPACITOR - MONOLYTHIC CERAMIC	0.01µF @ 1000V	70022508
CR502	DIODE - SILICON		70035004
CR502	DIODE - SILICON		70035004
CR503	DIODE - SILICON		70035004
CR504	DIODE - SILICON		70035004
CR505	DIODE - SILICON		70035004
CR506	DIODE - SILICON		70035004
CR507	DIODE - SILICON		70035004
CR508	DIODE - SILICON		70035004
CR509	DIODE - SILICON		70035004
CR510	DIODE - SILICON		70035004
CR511	DIODE - ZENER	8.2 V 5%	70035528
CR512	DIODE - ZENER	14 V 5%	70035529
CR513	DIODE - SILICON		70035004
CR514	DIODE - LIGHT EMITTING		70035303
CR515	DIODE - LIGHT EMITTING		70035303
CR516	DIODE - LIGHT EMITTING		70035303
CR517	DIODE - SILICON		70035004
F501	FUSE - 5 AMP		70072106
F502	FUSE - 5 AMP		70072106
P501	POLARIZING WAFER ASSEMBLY		70075007
P502	POLARIZING WAFER - 90°		70076009
P503	POLARIZING WAFER ASSEMBLY		70075003
P504	POLARIZING WAFER ASSEMBLY		70075003

Q501	TRANSISTOR - SILICON	(NPN)	70033005
Q502	TRANSISTOR - SILICON	(NPN)	70033005
Q503	TRANSISTOR - SILICON	(NPN)	70033008
R501	RESISTOR - CARBON (1/4W, 2%)	6.8KΩ	79902682
R502	RESISTOR - CARBON (1/4W, 2%)	390Ω	79902391
R503	RESISTOR - WIRE WOUND (2W, 5%)	0.33Ω	79920338
R504	RESISTOR - WIRE WOUND (1/2W, 10%)	1KΩ	79920102
R505	RESISTOR - CARBON (1/2W, 10%)	1KΩ	70010619
R506	RESISTOR - CARBON (1/4W, 2%)	470Ω	79902471
R507	RESISTOR - CARBON (1/4W, 2%)	100Ω	79902101
R508	RESISTOR - WIRE WOUND (2W, 10%)	0.27Ω	79920278
R509	RESISTOR - CARBON (1/4W, 5%)	1KΩ	79901102
R510	RESISTOR - CARBON (1/4W, 5%)	560Ω	79901561
R511	RESISTOR - CARBON (1/4W, 5%)	1.5KΩ	79901152
R512	RESISTOR - CARBON (1/2W, 5%)	2.7KΩ	70012007
R513	RESISTOR - CARBON (1/2W, 10%)	1KΩ	70010619
R514	RESISTOR - WIRE WOUND (2W, 5%)	0.27Ω	79920278
R515	RESISTOR - CARBON (1/4W, 5%)	33Ω	79901330
W501	WIRE - BARE		00503200
W502	WIRE - BARE		00503200

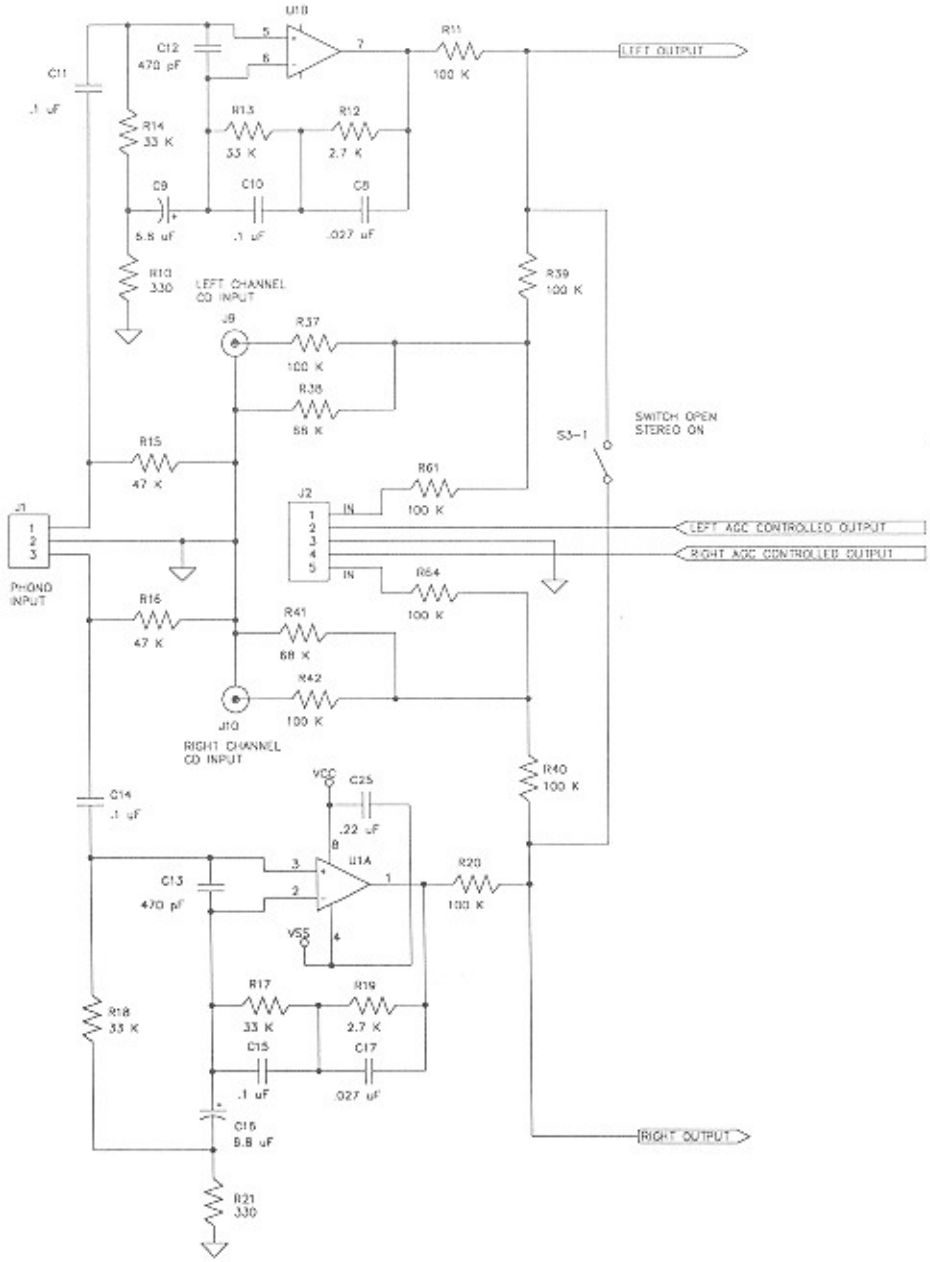
U1B
C12
470 pF
C11
.1 uF
R14
33 K
R13
33 K
R12
2.7 K
C9
5.6 uF
C10
.1 uF
C8
.027 uF
R10
330
LEFT CHANNEL
CD INPUT
R11
100 K
LEFT OUTPUT
R39
100 K
J9
R37
100 K
R38
68 K
SWITCH OPEN
STEREO ON
S3-1
R15
47 K
R61
100 K
J2
IN
LEFT AGC CONTROLLED OUTPUT
RIGHT AGC CONTROLLED OUTPUT
J1
PHONO
INPUT
R64
100 K
R16
47 K
R41
68 K
R42
100 K
J10
RIGHT CHANNEL
CD INPUT
R40
100 K
VCC
C25
.22 uF
C14
.1 uF
U1A
C13
470 pF
R20
100 K
VSS
R17
33 K
R19
2.7 K
C15
.1 uF
C17
.027 uF
R18
33 K
C16
5.6 uF
R21
330
RIGHT OUTPUT

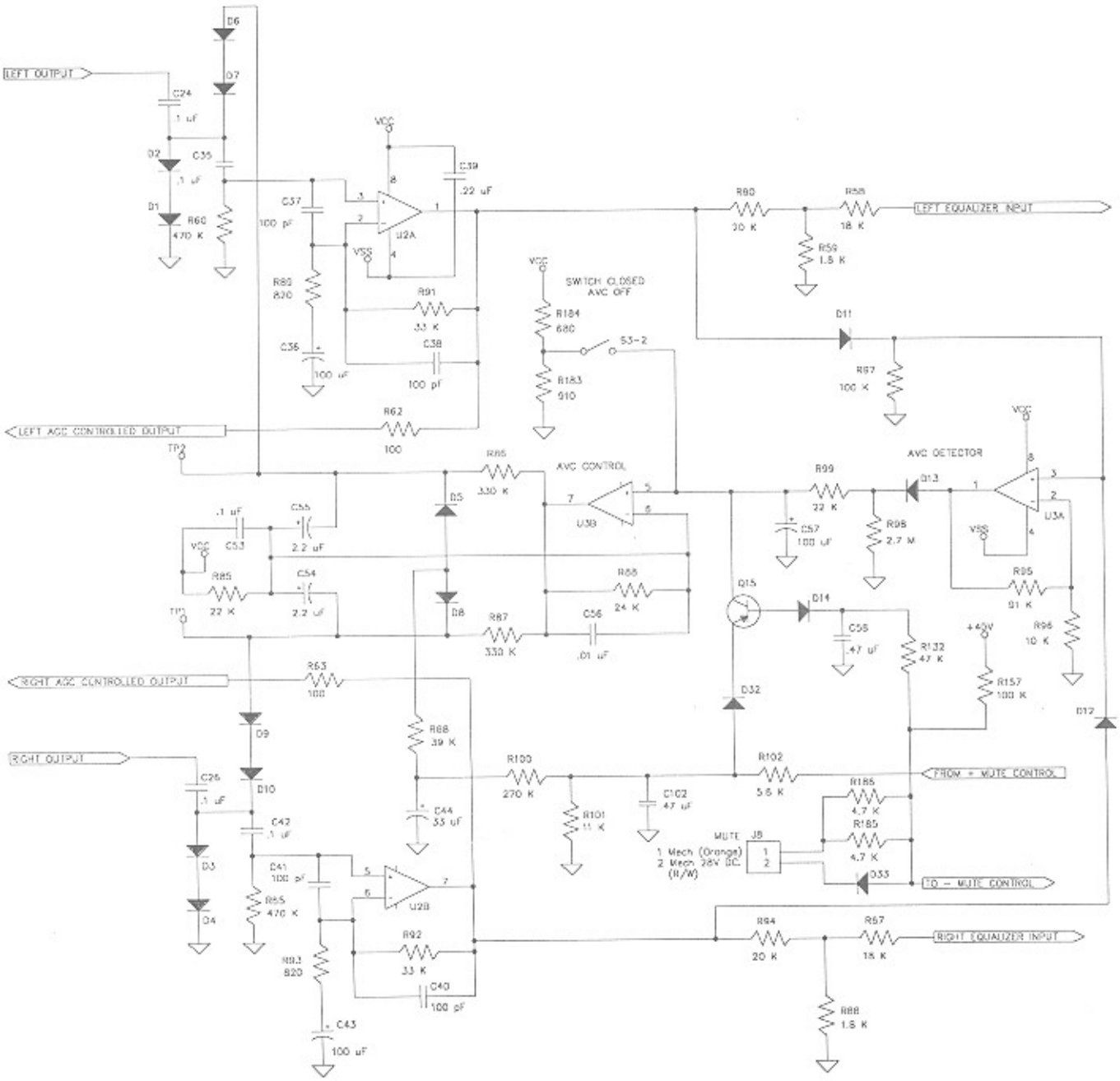

For Equivalent Engineering Drawing See 61023702-Q2 C

Figure 5-7A. Schematic Diagram - Stereo Preamp Assembly, Sheet 1

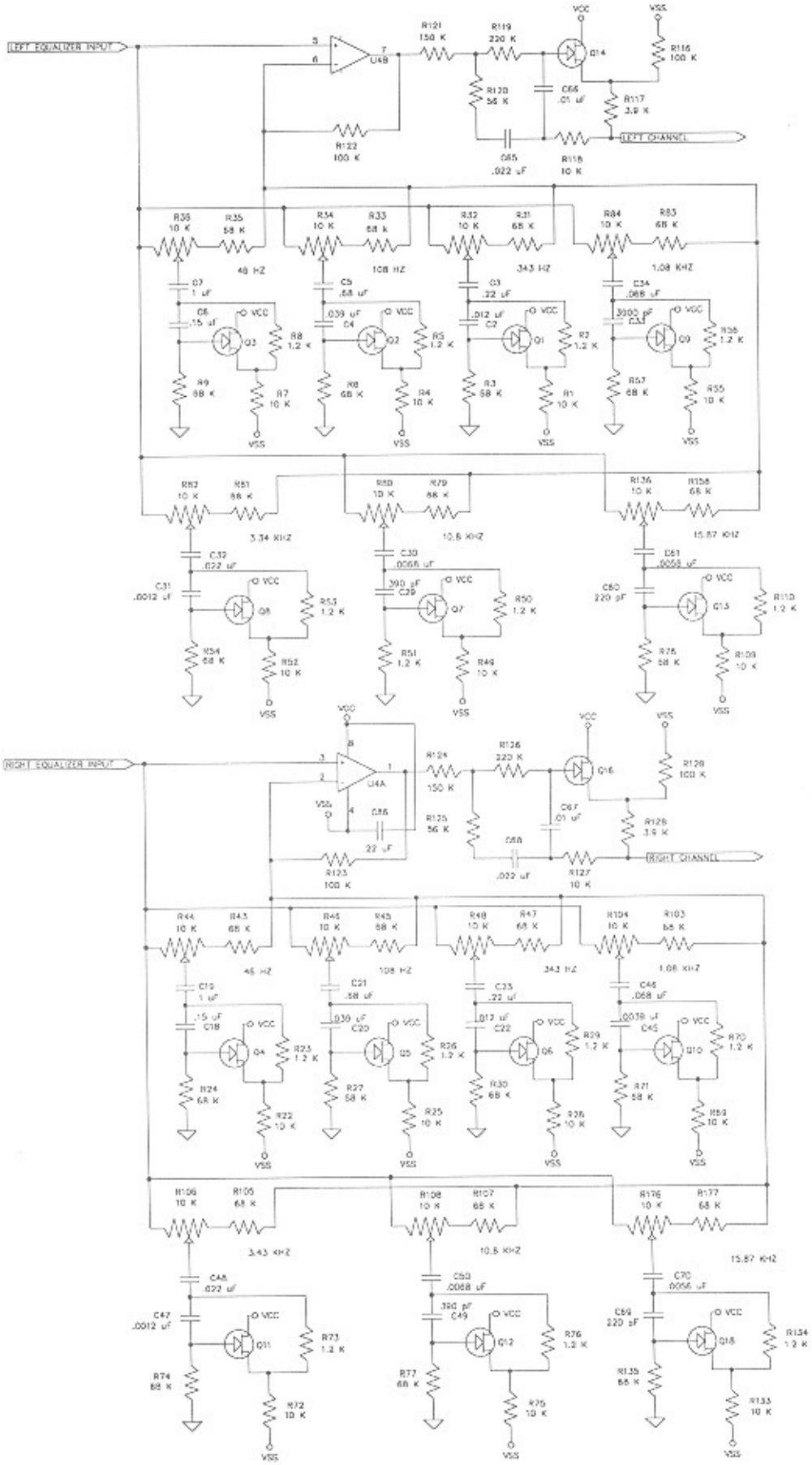
LEFT EQUALIZER INPUT
U4B
R121 150 K
R119 220 K
Q14
R116 100 K
R120 56 K
C64 .01 uF
R117 3.9 K
LEFT CHANNEL
R122 100 K
C65 .022 uF
R118 10 K
R38 10 K
R35 68 K
R34 10 K
R33 68 k
R32 10 K
R31 68 K
R84 10 K
R83 68 K
48 HZ
108 HZ
343 HZ
1.08 KHZ
C7 1 uF
C5 .68 uF
C3 .22 uF
C34 .068 uF
C6 .15 uF
C4 .039 uF
C2 .012 uF
C33 3900 pF
Q3
Q2
Q1
Q9
R8 1.2 K
R5 1.2 K
R2 1.2 K
R36 1.2 K
R9 68 K
R7 10 K
R6 68 K
R4 10 K
R3 68 K
R1 10 K
R57 68 K
R55 10 K
VCC
VSS
R82 10 K
R81 68 K
R80 10 K
R79 68 K
R136 10 K
R158 68 K
3.34 KHZ
10.8 KHZ
15.87 KHZ
C32 .022 uF
C31 .0012 uF
C30 .0068 uF
C29 390 pF
C61 .0056 uF
C60 220 pF
Q8
Q7
Q13
R53 1.2 K
R50 1.2 K
R110 1.2 K
R54 68 K
R52 10 K
R51 1.2 K
R49 10 K
R75 68 K
R109 10 K
RIGHT EQUALIZER INPUT
U4A
R124 150 K
R136 220 K
Q16
R129 100 K
R125 56 K
C67 .01 uF
R128 3.9 K
C66 .022 uF
RIGHT CHANNEL
R123 100 K
R127 10 K
R44 10 K
R43 68 K
R46 10 K
R45 68 K
R48 10 K
R47 68 K
R104 10 K
R103 68 K
46 HZ
108 HZ
343 HZ
1.08 KHZ
C19 1 uF
C21 .68 uF
C23 .22 uF
C46 .068 uF
C18 .15 uF
C20 .039 uF
C22 .012 uF
C45 .0039 uF
Q4
Q5
Q6
Q10
R23 1.2 K
R26 1.2 K
R29 1.2 K
R70 1.2 K
R24 68 K
R22 10 K
R27 68 K
R25 10 K
R30 68 K
R28 10 K
R71 68 K
R69 10 K
R106 10 K
R105 68 K
R108 10 K
R107 68 K
R176 10 K
R177 68 K
3.43 KHZ
10.8 KHZ
15.87 KHZ
C48 .022 uF
C47 .0012 uF
C50 .0068 uF
C49 390 pF
C70 .0056 uF
C69 220 pF
Q11
Q12
Q18
R73 1.2 K
R76 1.2 K
R134 1.2 K
R74 68 K
R72 10 K
R77 68 K
R75 10 K
R135 68 K
R133 10 K

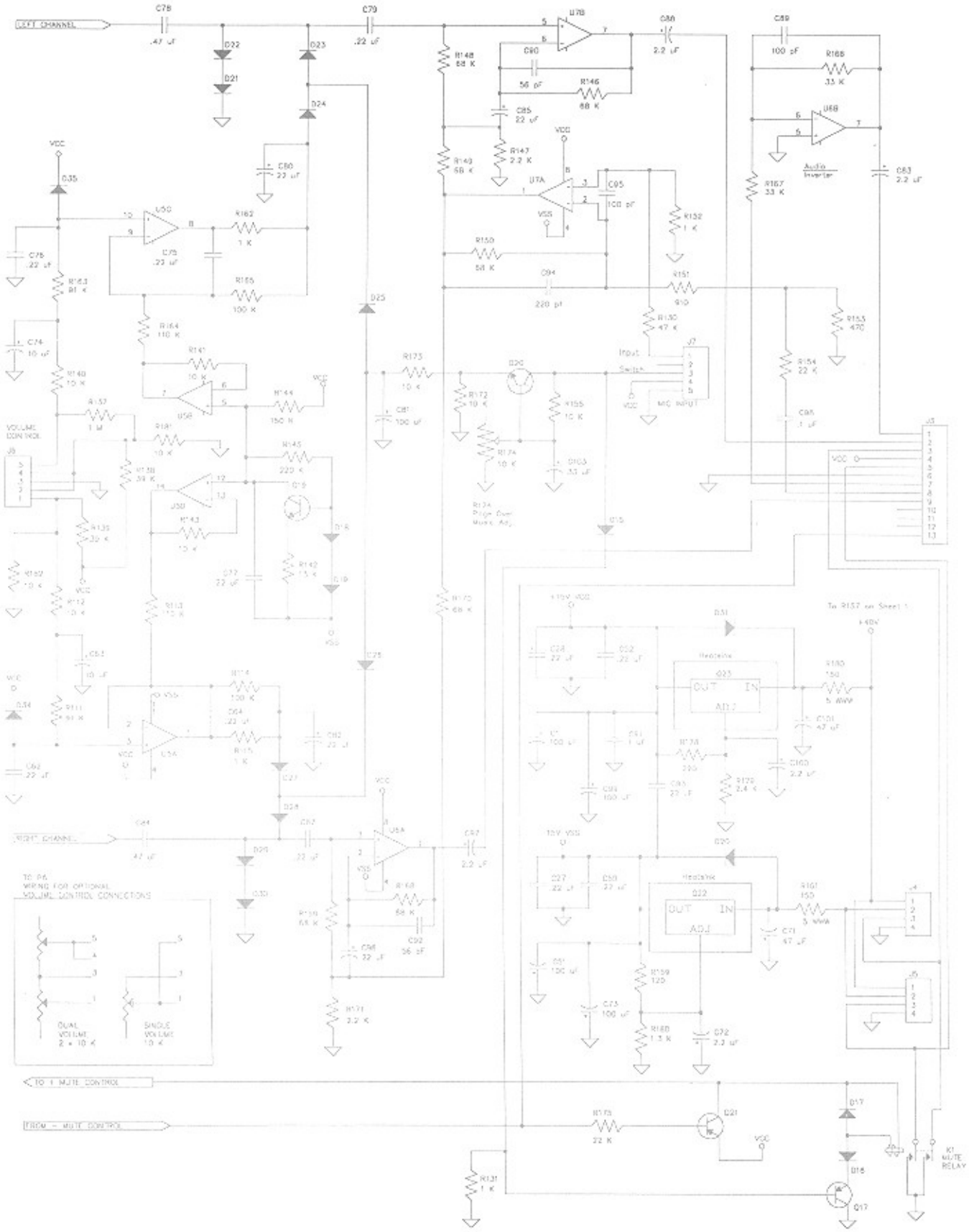

For Equivalent Engineering Drawing See 61023702-Q2 C

Figure 5-7A. Schematic Diagram - Stereo Preamp Assembly, Sheet 2

COMPONENT LIST FOR PREAMPLIFIER BOARD (61023702-D)

C1	CAPACITOR - ELECTROLYTIC	100 µF	70023814
C2	CAPACITOR - MONO CERAMIC	.012 µF	70028638
C3	CAPACITOR - MONO CERAMIC	.22 µF	70028523
C4	CAPACITOR - MONO CERAMIC	.039 µF	70028644
C5	CAPACITOR - MONO CERAMIC	.68 µF	70028522
C6	CAPACITOR - MONO CERAMIC	.15 µF	70028512
C7	CAPACITOR - MONO CERAMIC	1 µF	70028521
C8	CAPACITOR - MONO CERAMIC	.027 µF	70028642
C9	CAPACITOR - ELECTROLYTIC	6.8 µF	70023807
C10	CAPACITOR - MONO CERAMIC	.1 µF	70028649
C11	CAPACITOR - MONO CERAMIC	.1 µF	70028649
C12	CAPACITOR - MONO CERAMIC	470 PF	70028612
C13	CAPACITOR - MONO CERAMIC	470 PF	70028612
C14	CAPACITOR - MONO CERAMIC	.1 µF	70028649
C15	CAPACITOR - MONO CERAMIC	.1 µF	70028649
C16	CAPACITOR - ELECTROLYTIC	6.8 µF	70023807
C17	CAPACITOR - MONO CERAMIC	.027 µF	70028642
C18	CAPACITOR - MONO CERAMIC	.15 µF	70028512
C19	CAPACITOR - MONO CERAMIC	1 µF	70028521
C20	CAPACITOR - MONO CERAMIC	.039 µF	70028644
C21	CAPACITOR - MONO CERAMIC	.68 µF	70028522
C22	CAPACITOR - MONO CERAMIC	.012 µF	70028638
C23	CAPACITOR - MONO CERAMIC	.22 µF	70028523
C24	CAPACITOR - MONO CERAMIC	.1 µF	70028649
C25	CAPACITOR - MONO CERAMIC	.22 µF	70028523
C26	CAPACITOR - MONO CERAMIC	.1 µF	70028649
C27	CAPACITOR - MONO CERAMIC	.22 µF	70028523
C28	CAPACITOR - MONO CERAMIC	.22 µF	70028523
C29	CAPACITOR - MONO CERAMIC	390 PF	70028611
C30	CAPACITOR - MONO CERAMIC	.0068 µF	70028633
C31	CAPACITOR - MONO CERAMIC	.0012 µF	70028620
C32	CAPACITOR - MONO CERAMIC	.022 µF	70028641
C33	CAPACITOR - MONO CERAMIC	.0039 µF	70028629
C34	CAPACITOR - MONO CERAMIC	.068 µF	70028647
C35	CAPACITOR - MONO CERAMIC	.1 µF	70028649
C36	CAPACITOR - ELECTROLYTIC	100 µF	70023814
C37	CAPACITOR - MONO CERAMIC	100 PF	70028601
C38	CAPACITOR - MONO CERAMIC	100 PF	70028601
C39	CAPACITOR - MONO CERAMIC	.22 µF	70028523
C40	CAPACITOR - MONO CERAMIC	100 PF	70028601
C41	CAPACITOR - MONO CERAMIC	100 PF	70028601
C42	CAPACITOR - MONO CERAMIC	.1 µF	70028649
C43	CAPACITOR - ELECTROLYTIC	100 µF	70023814
C44	CAPACITOR - ELECTROLYTIC	33 µF	70023811
C45	CAPACITOR - MONO CERAMIC	.0039 µF	70028629
C46	CAPACITOR - MONO CERAMIC	.068 µF	70028647
C47	CAPACITOR - MONO CERAMIC	.0012 µF	70028620
C48	CAPACITOR - MONO CERAMIC	.022 µF	70028641
C49	CAPACITOR - MONO CERAMIC	390 PF	70028611
C50	CAPACITOR - MONO CERAMIC	.0068 µF	70028633
C51	CAPACITOR - ELECTROLYTIC	100 µF	70023814
C52	CAPACITOR - MONO CERAMIC	.22 µF	70028523
C53	CAPACITOR - MONO CERAMIC	.1 µF	70028649
C54	CAPACITOR - ELECTROLYTIC	2.2 µF	70023805
C55	CAPACITOR - ELECTROLYTIC	2.2 µF	70023805

C56	CAPACITOR - MONO CERAMIC	.01 µF	70028636
C57	CAPACITOR - ELECTROLYTIC	100 µF	70023814
C58	CAPACITOR - MONO CERAMIC	.47 µF	70028516
C59	CAPACITOR - MONO CERAMIC	.22 µF	70028523
C60	CAPACITOR - MONO CERAMIC	220 PF	70028606
C61	CAPACITOR - MONO CERAMIC	.0056 µF	70028632
C62	CAPACITOR - MONO CERAMIC	.22 µF	70028523
C63	CAPACITOR - ELECTROLYTIC	10 uF	70023808
C64	CAPACITOR - MONO CERAMIC	.22 µF	70028523
C65	CAPACITOR - MONO CERAMIC	.022 µF	70028641
C66	CAPACITOR - MONO CERAMIC	.01 µF	70028636
C67	CAPACITOR - MONO CERAMIC	.01 µF	70028636
C68	CAPACITOR - MONO CERAMIC	.022 µF	70028641
C69	CAPACITOR - MONO CERAMIC	220 PF	70028606
C70	CAPACITOR - MONO CERAMIC	.0056 µF	70028632
C71	CAPACITOR - ELECTROLYTIC	47 µF	70023812
C72	CAPACITOR - ELECTROLYTIC	2.2 µF	70023805
C73	CAPACITOR - ELECTROLYTIC	100 µF	70023814
C74	CAPACITOR - ELECTROLYTIC	10 µF	70023808
C75	CAPACITOR - MONO CERAMIC	.22 µF	70028523
C76	CAPACITOR - MONO CERAMIC	.22 µF	70028523
C77	CAPACITOR - MONO CERAMIC	.22 µF	70028523
C78	CAPACITOR - MONO CERAMIC	.47 µF	70028516
C79	CAPACITOR - MONO CERAMIC	.22 µF	70028523
C80	CAPACITOR - ELECTROLYTIC	22 µF	70023810
C81	CAPACITOR - ELECTROLYTIC	100 µF	70023814
C82	CAPACITOR - ELECTROLYTIC	22 µF	70023810
C83	CAPACITOR - ELECTROLYTIC	2.2 µF	70023805
C84	CAPACITOR - MONO CERAMIC	.47 µF	70028516
C85	CAPACITOR - ELECTROLYTIC	22 µF	70023810
C86	CAPACITOR - MONO CERAMIC	.22 µF	70028523
C87	CAPACITOR - MONO CERAMIC	.22 µF	70028523
C88	CAPACITOR - ELECTROLYTIC	2.2 µF	70023805
C89	CAPACITOR - MONO CERAMIC	100 PF	70028601
C90	CAPACITOR - MONO CERAMIC	56 PF	70028710
C91	CAPACITOR - MONO CERAMIC	.1 µF	70028649
C92	CAPACITOR - MONO CERAMIC	56 PF	70028710
C93	CAPACITOR - MONO CERAMIC	.22 µF	70028523
C94	CAPACITOR - MONO CERAMIC	220 PF	70028606
C95	CAPACITOR - MONO CERAMIC	100 PF	70028601
C96	CAPACITOR - ELECTROLYTIC	22 µF	70023810
C97	CAPACITOR - ELECTROLYTIC	2.2 µF	70023805
C98	CAPACITOR - MONO CERAMIC	.1 µF	70028649
C99	CAPACITOR - ELECTROLYTIC	100 µF	70023814
C100	CAPACITOR - ELECTROLYTIC	2.2 µF	70023805
C101	CAPACITOR - ELECTROLYTIC	47 µF	70023812
C102	CAPACITOR - MONO CERAMIC	.47 uF	70028516
C103	CAPACITOR - ELECTROLYTIC	33 uF	70023811
D1	DIODE - SILICON	1N4148	70035012
D2	DIODE - SILICON	1N4148	70035012
D3	DIODE - SILICON	1N4148	70035012
D4	DIODE - SILICON	1N4148	70035012
D5	DIODE - SILICON	1N4148	70035012
D6	DIODE - SILICON	1N4148	70035012
D7	DIODE - SILICON	1N4148	70035012
D8	DIODE - SILICON	1N4148	70035012
D9	DIODE - SILICON	1N4148	70035012

D10	DIODE - SILICON	1N4148	70035012
D11	DIODE - SILICON	1N4148	70035012
D12	DIODE - SILICON	1N4148	70035012
D13	DIODE - SILICON	1N4148	70035012
D14	DIODE - SILICON	1N4148	70035012
D15	DIODE - SILICON	1N4148	70035012
D16	DIODE - SILICON	1N4148	70035012
D17	DIODE - SILICON	1N4148	70035012
D18	DIODE - SILICON	1N4148	70035012
D19	DIODE - SILICON	1N4148	70035012
D20	DIODE - SILICON	1N4148	70035012
D21	DIODE - SILICON	1N4148	70035012
D22	DIODE - SILICON	1N4148	70035012
D23	DIODE - SILICON	1N4148	70035012
D24	DIODE - SILICON	1N4148	70035012
D25	DIODE - SILICON	1N4148	70035012
D26	DIODE - SILICON	1N4148	70035012
D27	DIODE - SILICON	1N4148	70035012
D28	DIODE - SILICON	1N4148	70035012
D29	DIODE - SILICON	1N4148	70035012
D30	DIODE - SILICON	1N4148	70035012
D31	DIODE - SILICON	1N4148	70035012
D32	DIODE - SILICON	1N4148	70035012
D33	DIODE - SILICON	1N4148	70035012
D34	DIODE - SILICON	1N4148	70035012
D35	DIODE - SILICON	1N4148	70035012
K1	RELAY - REED		70042208
P1	HEADER - NON POLARIZING (3 CKT)		70074921
P2	HEADER - NON POLARIZING (5 CKT)		70074923
P3	HEADER - NON POLARIZING (13 CKT)		70074931
P4	CONNECTOR - TOP ENTRY (4 CKT)		70074802
P5	CONNECTOR - TOP ENTRY (4 CKT)		70074802
P6	HEADER - NON POLARIZING (5 CKT)		70074923
P7	HEADER - NON POLARIZING (5 CKT)		70074923
P8	HEADER - POLARIZING (2 CKT)		70075002
P9	RECEPTACLE - PHONO JACK		21540902
P10	RECEPTACLE - PHONO JACK		21540902
Q1	TRANSISTOR - J FET (N-CHANNEL)	2N5484	70030901
Q2	TRANSISTOR - J FET (N-CHANNEL)	2N5484	70030901
Q3	TRANSISTOR - J FET (N-CHANNEL)	2N5484	70030901
Q4	TRANSISTOR - J FET (N-CHANNEL)	2N5484	70030901
Q5	TRANSISTOR - J FET (N-CHANNEL)	2N5484	70030901
Q6	TRANSISTOR - J FET (N-CHANNEL)	2N5484	70030901
Q7	TRANSISTOR - J FET (N-CHANNEL)	2N5484	70030901
Q8	TRANSISTOR - J FET (N-CHANNEL)	2N5484	70030901
Q9	TRANSISTOR - J FET (N-CHANNEL)	2N5484	70030901
Q10	TRANSISTOR - J FET (N-CHANNEL)	2N5484	70030901
Q11	TRANSISTOR - J FET (N-CHANNEL)	2N5484	70030901
Q12	TRANSISTOR - J FET (N-CHANNEL)	2N5484	70030901
Q13	TRANSISTOR - J FET (N-CHANNEL)	2N5484	70030901
Q14	TRANSISTOR - J FET (N-CHANNEL)	2N5484	70030901
Q15	TRANSISTOR - SILICON (PNP)	MPSA56	70030104
Q16	TRANSISTOR - J FET (N-CHANNEL)	2N5484	70030901
Q17	TRANSISTOR - SILICON (PNP)	MPSA56	70030104
Q18	TRANSISTOR - J FET (N-CHANNEL)	2N5484	70030901

	Q19	TRANSISTOR - SILICON (NPN)	MPSA06	70030008
	Q20	TRANSISTOR - SILICON (NPN)	MPSA06	70030008
	Q21	TRANSISTOR - SILICON (PNP)	MPSA56	70030104
	Q22	REGULATOR - VOLTAGE (ADJ NEG)	LM337T	70036508
	Q23	REGULATOR - VOLTAGE (ADJ POS)	LM317T	70036507
	R1	RESISTOR - CARBON (1/4W 5%)	10 K	79901103
	R2	RESISTOR - CARBON (1/4W 5%)	1.2 K	79901122
	R3	RESISTOR - CARBON (1/4W 5%)	68 K	79901683
	R4	RESISTOR - CARBON (1/4W 5%)	10 K	79901103
	R5	RESISTOR - CARBON (1/4W 5%)	1.2 K	79901122
	R6	RESISTOR - CARBON (1/4W 5%)	68 K	79901683
	R7	RESISTOR - CARBON (1/4W 5%)	10 K	79901103
	R8	RESISTOR - CARBON (1/4W 5%)	1.2 K	79901122
	R9	RESISTOR - CARBON (1/4W 5%)	68 K	79901683
	R10	RESISTOR - CARBON (1/4W 5%)	330 Ω	79901331
	R11	RESISTOR - CARBON (1/4W 5%)	100 K	79901104
	R12	RESISTOR - CARBON (1/4W 5%)	2.7 K	79901272
	R13	RESISTOR - CARBON (1/4W 5%)	33 K	79901333
	R14	RESISTOR - CARBON (1/4W 5%)	33 K	79901333
	R15	RESISTOR - CARBON (1/4W 5%)	47 K	79901473
	R16	RESISTOR - CARBON (1/4W 5%)	47 K	79901473
	R17	RESISTOR - CARBON (1/4W 5%)	33 K	79901333
	R18	RESISTOR - CARBON (1/4W 5%)	33 K	79901333
	R19	RESISTOR - CARBON (1/4W 5%)	2.7 K	79901272
	R20	RESISTOR - CARBON (1/4W 5%)	100 K	79901104
	R21	RESISTOR - CARBON (1/4W 5%)	330 Ω	79901331
	R22	RESISTOR - CARBON (1/4W 5%)	10 K	79901103
	R23	RESISTOR - CARBON (1/4W 5%)	1.2 K	79901122
	R24	RESISTOR - CARBON (1/4W 5%)	68 K	79901683
	R25	RESISTOR - CARBON (1/4W 5%)	10 K	79901103
	R26	RESISTOR - CARBON (1/4W 5%)	1.2 K	79901122
	R27	RESISTOR - CARBON (1/4W 5%)	68 K	79901683
	R28	RESISTOR - CARBON (1/4W 5%)	10 K	79901103
	R29	RESISTOR - CARBON (1/4W 5%)	1.2 K	79901122
	R30	RESISTOR - CARBON (1/4W 5%)	68 K	79901683
	R31	RESISTOR - CARBON (1/4W 5%)	68 K	79901683
*	R32	POTENTIOMETER - SPECIAL	10 K	70040018
	R33	RESISTOR - CARBON (1/4W 5%)	68 K	79901683
*	R34	POTENTIOMETER - SPECIAL	10 K	70040018
	R35	RESISTOR - CARBON (1/4W 5%)	68 K	79901683
*	R36	POTENTIOMETER - SPECIAL	10 K	70040018
	R37	RESISTOR - CARBON (1/4W 5%)	100 K	79901104
	R38	RESISTOR - CARBON (1/4W 5%)	68 K	79901683
	R39	RESISTOR - CARBON (1/4W 5%)	100 K	79901104
	R40	RESISTOR - CARBON (1/4W 5%)	100 K	79901104
	R41	RESISTOR - CARBON (1/4W 5%)	68 K	79901683
	R42	RESISTOR - CARBON (1/4W 5%)	100 K	79901104
	R43	RESISTOR - CARBON (1/4W 5%)	68 K	79901683
*	R44	POTENTIOMETER - SPECIAL	10 K	70040018
	R45	RESISTOR - CARBON (1/4W 5%)	68 K	79901683
*	R46	POTENTIOMETER - SPECIAL	10 K	70040018
	R47	RESISTOR - CARBON (1/4W 5%)	68 K	79901683
*	R48	POTENTIOMETER - SPECIAL	10 K	70040018
	R49	RESISTOR - CARBON (1/4W 5%)	10 K	79901103
	R50	RESISTOR - CARBON (1/4W 5%)	1.2 K	79901122
	R51	RESISTOR - CARBON (1/4W 5%)	68 K	79901683
	R52	RESISTOR - CARBON (1/4W 5%)	10 K	79901103

	R53	RESISTOR - CARBON (1/4W 5%)	1.2 K	79901122
	R54	RESISTOR - CARBON (1/4W 5%)	68 K	79901683
	R55	RESISTOR - CARBON (1/4W 5%)	10 K	79901103
	R56	RESISTOR - CARBON (1/4W 5%)	1.2 K	79901122
	R57	RESISTOR - CARBON (1/4W 5%)	68 K	79901683
	R58	RESISTOR - CARBON (1/4W 5%)	18 K	79901183
	R59	RESISTOR - CARBON (1/4W 5%)	1.8 K	79901182
	R60	RESISTOR - CARBON (1/4W 5%)	470 K	79901474
	R61	RESISTOR - CARBON (1/4W 5%)	100 K	79901104
	R62	RESISTOR - CARBON (1/4W 5%)	100 Ω	79901101
	R63	RESISTOR - CARBON (1/4W 5%)	100 Ω	79901101
	R64	RESISTOR - CARBON (1/4W 5%)	100 K	79901104
	R65	RESISTOR - CARBON (1/4W 5%)	470 K	79901474
	R66	RESISTOR - CARBON (1/4W 5%)	1.8 K	79901182
	R67	RESISTOR - CARBON (1/4W 5%)	18 K	79901183
	R68	RESISTOR - CARBON (1/4W 5%)	39 K	79901393
	R69	RESISTOR - CARBON (1/4W 5%)	10 K	79901103
	R70	RESISTOR - CARBON (1/4W 5%)	1.2 K	79901122
	R71	RESISTOR - CARBON (1/4W 5%)	68 K	79901683
	R72	RESISTOR - CARBON (1/4W 5%)	10 K	79901103
	R73	RESISTOR - CARBON (1/4W 5%)	1.2 K	79901122
	R74	RESISTOR - CARBON (1/4W 5%)	68 K	79901683
	R75	RESISTOR - CARBON (1/4W 5%)	10 K	79901103
	R76	RESISTOR - CARBON (1/4W 5%)	1.2 K	79901122
	R77	RESISTOR - CARBON (1/4W 5%)	68 K	79901683
	R78	RESISTOR - CARBON (1/4W 5%)	68 K	79901683
	R79	RESISTOR - CARBON (1/4W 5%)	68 K	79901683
*	R80	POTENTIOMETER - SPECIAL	10 K	70040018
	R81	RESISTOR - CARBON (1/4W 5%)	68 K	79901683
*	R82	POTENTIOMETER - SPECIAL	10 K	70040018
	R83	RESISTOR - CARBON (1/4W 5%)	68 K	79901683
*	R84	POTENTIOMETER - SPECIAL	10 K	70040018
	R85	RESISTOR - CARBON (1/4W 5%)	22 K	79901223
	R86	RESISTOR - CARBON (1/4W 5%)	330 K	79901334
	R87	RESISTOR - CARBON (1/4W 5%)	330 K	79901334
	R88	RESISTOR - CARBON (1/4W 5%)	24 K	79901243
	R89	RESISTOR - CARBON (1/4W 5%)	820 Ω	79901821
	R90	RESISTOR - CARBON (1/4W 5%)	20 K	79901203
	R91	RESISTOR - CARBON (1/4W 5%)	33 K	79901333
	R92	RESISTOR - CARBON (1/4W 5%)	33 K	79901333
	R93	RESISTOR - CARBON (1/4W 5%)	820 Ω	79901821
	R94	RESISTOR - CARBON (1/4W 5%)	20 K	79901203
	R95	RESISTOR - CARBON (1/4W 5%)	91 K	79901913
	R96	RESISTOR - CARBON (1/4W 5%)	10 K	79901103
	R97	RESISTOR - CARBON (1/4W 5%)	100 K	79901104
	R98	RESISTOR - CARBON (1/4W 5%)	2.7 M	79901275
	R99	RESISTOR - CARBON (1/4W 5%)	22 K	79901223
	R100	RESISTOR - CARBON (1/4W 5%)	270 K	79901274
	R101	RESISTOR - CARBON (1/4W 5%)	11 K	79901113
	R102	RESISTOR - CARBON (1/4W 5%)	5.6 K	79901562
	R103	RESISTOR - CARBON (1/4W 5%)	68 K	79901683
*	R104	POTENTIOMETER - SPECIAL	10 K	70040018
	R105	RESISTOR - CARBON (1/4W 5%)	68 K	79901683
*	R106	POTENTIOMETER - SPECIAL	10 K	70040018
	R107	RESISTOR - CARBON (1/4W 5%)	68 K	79901683
*	R108	POTENTIOMETER - SPECIAL	10 K	70040018
	R109	RESISTOR - CARBON (1/4W 5%)	10 K	79901103
	R110	RESISTOR - CARBON (1/4W 5%)	1.2 K	79901122

R111	RESISTOR - CARBON (1/4W 5%)	91 K	79901913
R112	RESISTOR - CARBON (1/4W 5%)	10 K	79901103
R113	RESISTOR - CARBON (1/4W 5%)	110 K	79901114
R114	RESISTOR - CARBON (1/4W 5%)	100 K	79901104
R115	RESISTOR - CARBON (1/4W 5%)	1 K	79901102
R116	RESISTOR - CARBON (1/4W 5%)	100 K	79901104
R117	RESISTOR - CARBON (1/4W 5%)	3.9 K	79901392
R118	RESISTOR - CARBON (1/4W 5%)	10 K	79901103
R119	RESISTOR - CARBON (1/4W 5%)	220 K	79901224
R120	RESISTOR - CARBON (1/4W 5%)	56 K	79901563
R121	RESISTOR - CARBON (1/4W 5%)	150 K	79901154
R122	RESISTOR - CARBON (1/4W 5%)	100 K	79901104
R123	RESISTOR - CARBON (1/4W 5%)	100 K	79901104
R124	RESISTOR - CARBON (1/4W 5%)	150 K	79901154
R125	RESISTOR - CARBON (1/4W 5%)	56 K	79901563
R126	RESISTOR - CARBON (1/4W 5%)	220 K	79901224
R127	RESISTOR - CARBON (1/4W 5%)	10 K	79901103
R128	RESISTOR - CARBON (1/4W 5%)	3.9 K	79901392
R129	RESISTOR - CARBON (1/4W 5%)	100 K	79901104
R130	RESISTOR - CARBON (1/4W 5%)	47 K	79901473
R131	RESISTOR - CARBON (1/4W 5%)	1 K	79901102
R132	RESISTOR - CARBON (1/4W 5%)	47 K	79901473
R133	RESISTOR - CARBON (1/4W 5%)	10 K	79901103
R134	RESISTOR - CARBON (1/4W 5%)	1.2 K	79901122
R135	RESISTOR - CARBON (1/4W 5%)	68 K	79901683
* R136	POTENTIOMETER - SPECIAL	10 K	70040018
R137	RESISTOR - CARBON (1/4W 5%)	1 M	79901105
R138	RESISTOR - CARBON (1/4W 5%)	39 K	79901393
R139	RESISTOR - CARBON (1/4W 5%)	39 K	79901393
R140	RESISTOR - CARBON (1/4W 5%)	10 K	79901103
R141	RESISTOR - CARBON (1/4W 5%)	10 K	79901103
R142	RESISTOR - CARBON (1/4W 5%)	13 K	79901133
R143	RESISTOR - CARBON (1/4W 5%)	10 K	79901103
R144	RESISTOR - CARBON (1/4W 5%)	150 K	79901154
R145	RESISTOR - CARBON (1/4W 5%)	220 K	79901224
R146	RESISTOR - CARBON (1/4W 5%)	68 K	79901683
R147	RESISTOR - CARBON (1/4W 5%)	2.2 K	79901222
R148	RESISTOR - CARBON (1/4W 5%)	68 K	79901683
R149	RESISTOR - CARBON (1/4W 5%)	68 K	79901683
R150	RESISTOR - CARBON (1/4W 5%)	68 K	79901683
R151	RESISTOR - CARBON (1/4W 5%)	910 Ω	79901911
R152	RESISTOR - CARBON (1/4W 5%)	1 K	79901102
R153	RESISTOR - CARBON (1/4W 5%)	470 Ω	79901471
R154	RESISTOR - CARBON (1/4W 5%)	22 K	79901223
R155	RESISTOR - CARBON (1/4W 5%)	10 K	79901103
R156	NOT USED		
R157	RESISTOR - CARBON (1/4W 5%)	100 K	79901104
R158	RESISTOR - CARBON (1/4W 5%)	68 K	79901683
R159	RESISTOR - CARBON (1/4W 2%)	120 Ω	79902121
R160	RESISTOR - CARBON (1/4W 2%)	1.3 K	79902132
R161	RESISTOR - WIREWOUND	150 Ω	70012510
R162	RESISTOR - CARBON (1/4W 5%)	1 K	79901102
R163	RESISTOR - CARBON (1/4W 5%)	91 K	79901913
R164	RESISTOR - CARBON (1/4W 5%)	110 K	79901114
R165	RESISTOR - CARBON (1/4W 5%)	100 K	79901104
R166	RESISTOR - CARBON (1/4W 5%)	33 K	79901333
R167	RESISTOR - CARBON (1/4W 5%)	33 K	79901333
R168	RESISTOR - CARBON (1/4W 5%)	68 K	79901683

	R169	RESISTOR - CARBON (1/4W 5%)	68 K	79901683
	R170	RESISTOR - CARBON (1/4W 5%)	68 K	79901683
	R171	RESISTOR - CARBON (1/4W 5%)	2.2 K	79901222
	R172	RESISTOR - CARBON (1/4W 5%)	10 K	79901103
	R173	RESISTOR - CARBON (1/4W 5%)	10 K	79901103
*	R174	POTENTIOMETER	10 K	70040014
	R175	RESISTOR - CARBON (1/4W 5%)	22 K	79901223
*	R176	POTENTIOMETER - SPECIAL	10 K	70040018
	R177	RESISTOR - CARBON (1/4W 5%)	68 K	79901683
	R178	RESISTOR - CARBON (1/4W 2%)	220 Ω	79902221
	R179	RESISTOR - CARBON (1/4W 2%)	2.4 K	79902242
	R180	RESISTOR - WIREWOUND	150 Ω	70012510
	R181	RESISTOR - CARBON (1/4W 5%)	10 K	79901103
	R182	RESISTOR - CARBON (1/4W 5%)	10 K	79901103
	R183	RESISTOR - CARBON (1/4W 5%)	910 Ω	79901911
	R184	RESISTOR - CARBON (1/4W 5%)	680 Ω	79901681
	R185	RESISTOR - CARBON (1/4W 5%)	4.7 K	79901472
	R186	RESISTOR - CARBON (1/4W 5%)	4.7 K	79901472
	S1	SWITCH - DIP		70042902
	U1	IC - DUAL OP AMP	LM833	30800238
	U2	IC - DUAL OP AMP	LM833	30800238
	U3	IC - DUAL OP AMP	LM833	30800238
	U4	IC - DUAL OP AMP	LM833	30800238
	U5	IC - DUAL OP AMP	LM348	30800215
	U6	IC - DUAL OP AMP	LM833	30800238
	U7	IC - DUAL OP AMP	LM833	30800238

* Requires Potentiometer Adjustment Shaft, Part Number 21621101.

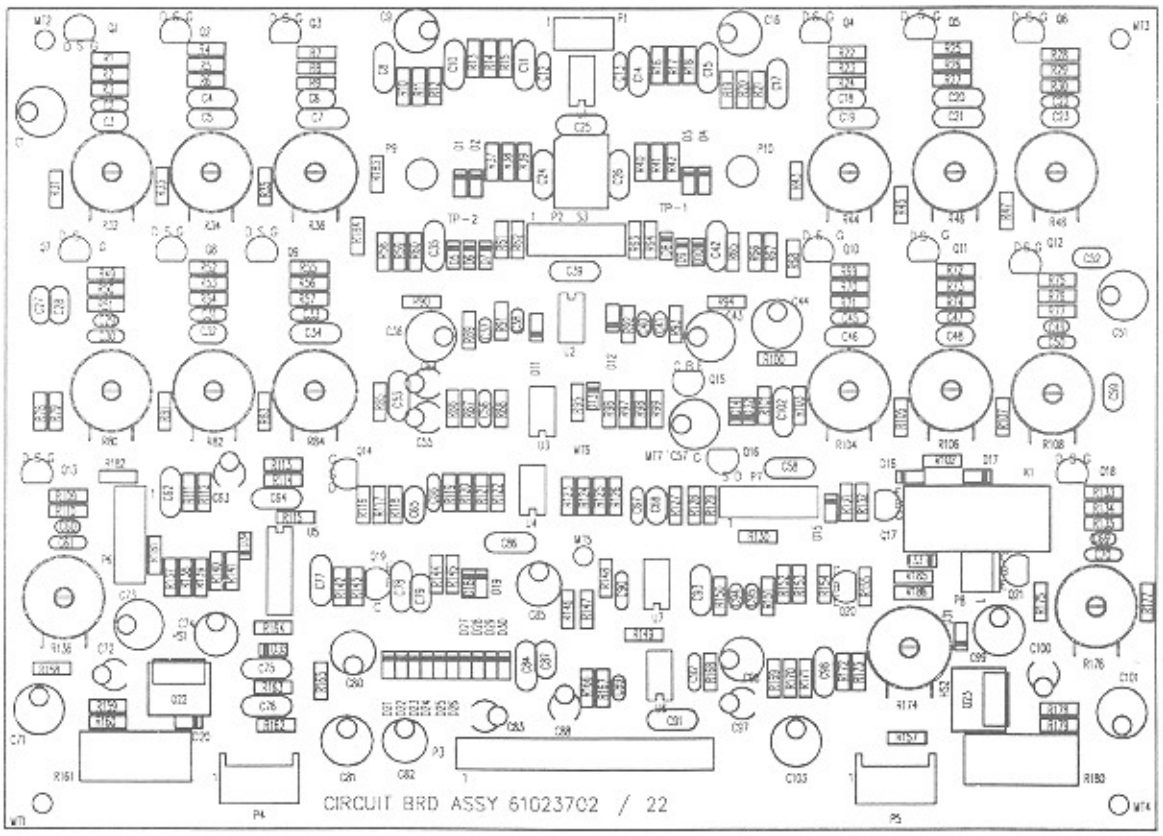

Figure 5-7B. Preamplifier Circuit Board Layout

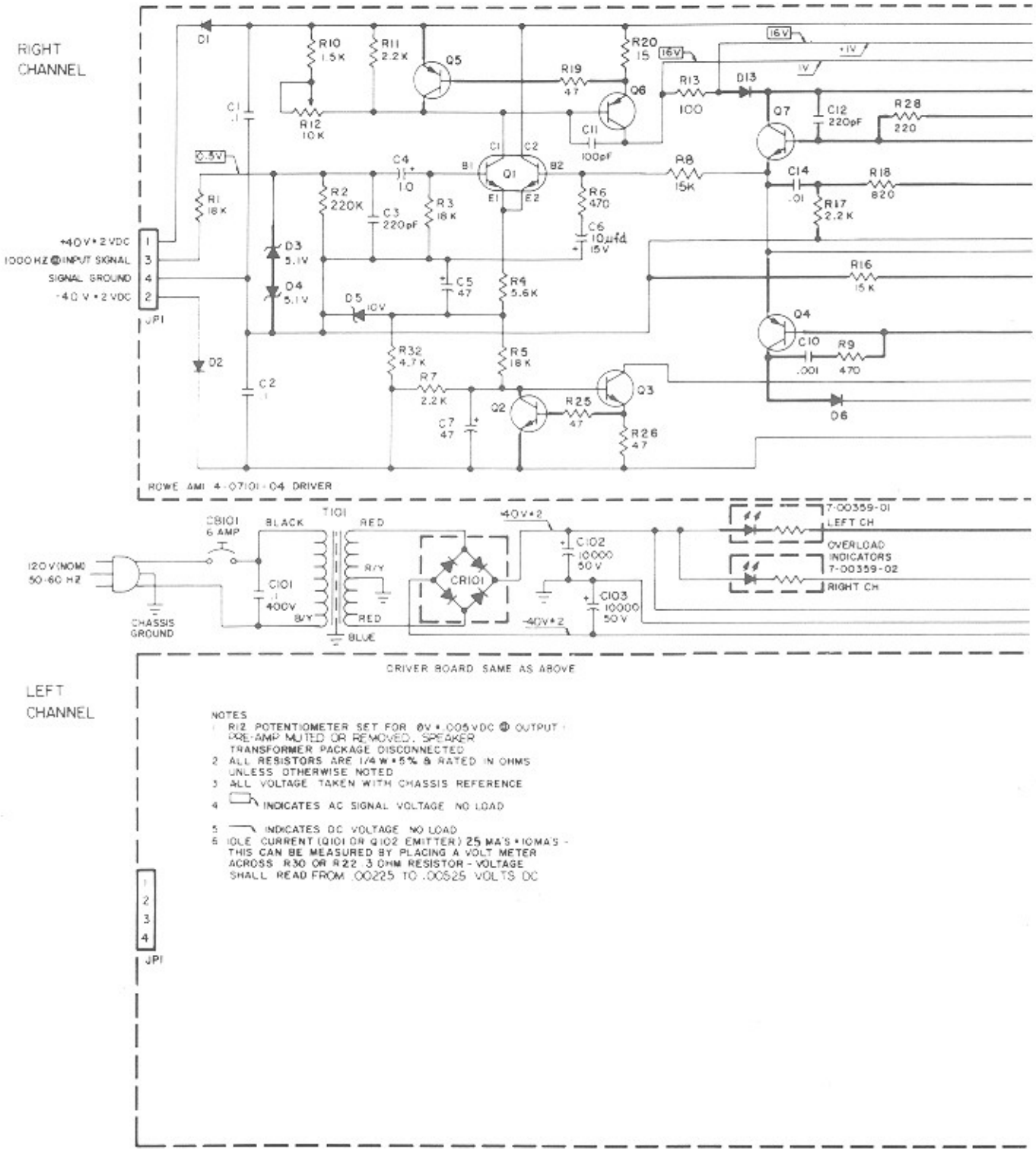
RIGHT CHANNEL
D1
R10 1.5K
R11 2.2K
Q5
R20 15
16V
+1V
1V
R19 47
Q6
R13 100
D13
Q7
C12 220pF
R28 220
C1 .1
R12 10K
C11 100pF
0.5V
C4 10
Q1
B1
B2
E1
E2
R8 15K
C14 .01
R18 820
R1 18K
R2 220K
C3 220pF
R3 18K
R6 470
C6 10µfd 15V
R17 2.2K
+40V+2VDC
1000HZ @ INPUT SIGNAL
SIGNAL GROUND
-40V+2VDC
JP1
D3 5.1V
D4 5.1V
C5 47
R4 5.6K
R16 15K
D5 10V
Q4
C10 .001
R9 470
D2
R32 4.7K
R5 18K
C2 .1
R7 2.2K
Q3
R25 47
Q2
C7 47
R26 47
D6
ROWE AMI 4-07101-04 DRIVER
CB101 6 AMP
BLACK
T101
RED
+40V+2
7-00359-01
LEFT CH
120V(NOM) 50-60 HZ
C101 .1 400V
B/Y
R/Y
CR101
C102 10000 50V
OVERLOAD INDICATORS 7-00359-02
RIGHT CH
CHASSIS GROUND
RED
BLUE
C103 10000 50V
-40V+2
DRIVER BOARD SAME AS ABOVE
LEFT CHANNEL
NOTES
1 R12 POTENTIOMETER SET FOR 0V ± .005VDC @ OUTPUT - PRE-AMP MUTED OR REMOVED. SPEAKER TRANSFORMER PACKAGE DISCONNECTED
2 ALL RESISTORS ARE 1/4W ± 5% & RATED IN OHMS UNLESS OTHERWISE NOTED
3 ALL VOLTAGE TAKEN WITH CHASSIS REFERENCE
4 INDICATES AC SIGNAL VOLTAGE NO LOAD
5 INDICATES DC VOLTAGE NO LOAD
6 IDLE CURRENT (Q101 OR Q102 EMITTER) 25 MA'S ± 10MA'S - THIS CAN BE MEASURED BY PLACING A VOLT METER ACROSS R30 OR R22 3 OHM RESISTOR - VOLTAGE SHALL READ FROM .00225 TO .00525 VOLTS DC
1
2
3
4
JP1

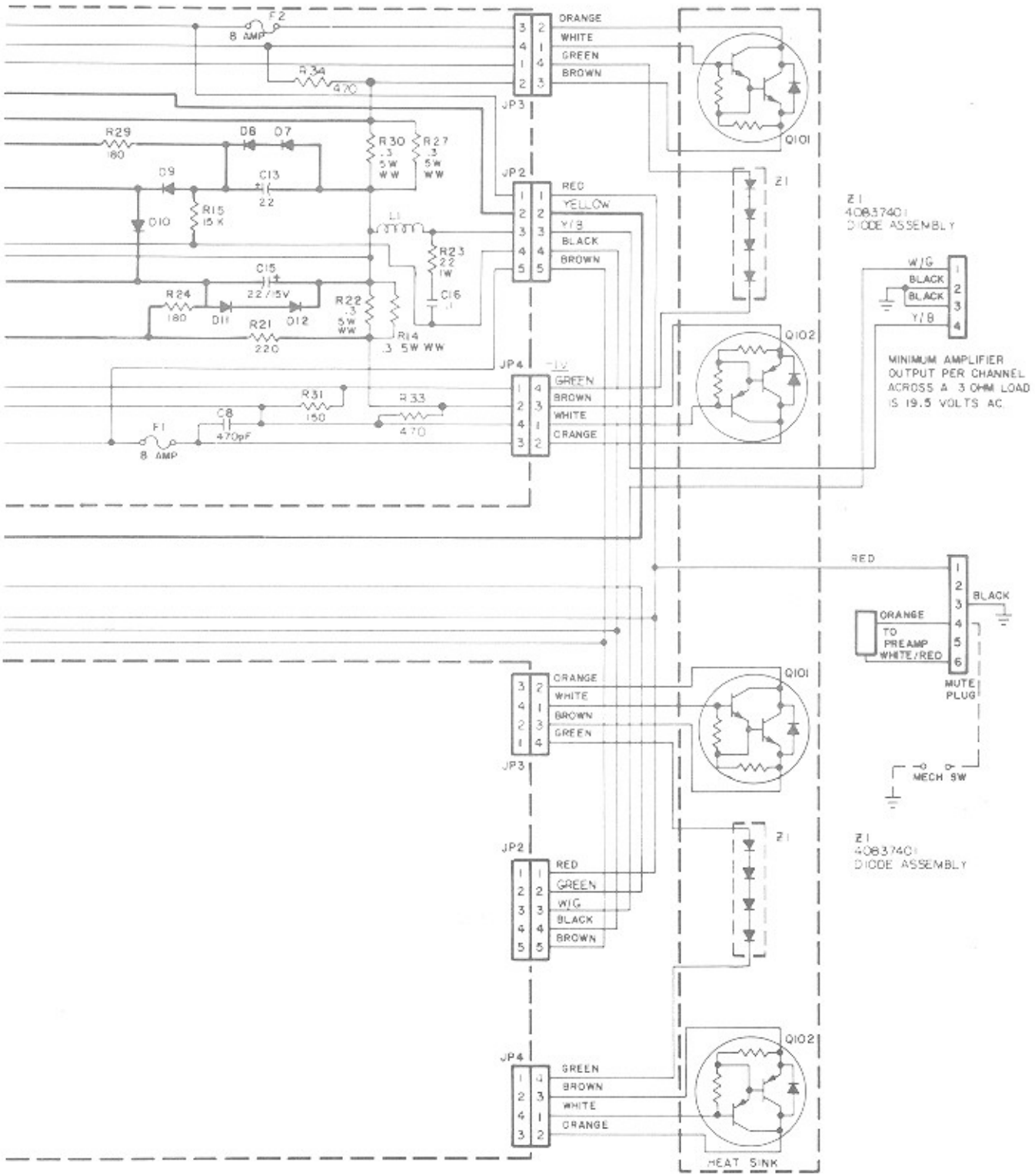

(See Figure 8-15 for the pictorial view of the heat sink)

For Equivalent Engineering Drawing See 61024901/02-Q2 D

Figure 5-8A. Schematic Diagram - 250 Watt Power Amp

COMPONENT LIST FOR AMPLIFIER DRIVER BOARD 40710104-J

C1	Capacitor - Mylar	.1 MF	70021549
C2	Capacitor - Mylar	.1 MF	70021549
C3	Capacitor - Monolithic Ceramic	220 PF	70028606
C4	Capacitor - Electrolytic	1 MF	70023804
C5	Capacitor - Electrolytic	47 MF	70023812
C6	Capacitor - Electrolytic	10 MF	70023808
C7	Capacitor - Electrolytic	47 MF	70023812
C8	Capacitor - Monolithic Ceramic	470 PF	70028612
C9	NOT USED		
C10	Capacitor - Monolithic Ceramic	.001 MF	70028618
C11	Capacitor - Monolithic Ceramic	100 PF	70028601
C12	Capacitor - Monolithic Ceramic	220 PF	70028606
C13	Capacitor - Electrolytic	22 MF	70023810
C14	Capacitor - Monolithic Ceramic	.01 MF	70028636
C15	Capacitor - Electrolytic	22 MF	70023810
C16	Capacitor - Mylar	.1 MF	70021549
CR1	Diode - Silicon		70035005
CR2	Diode - Silicon		70035005
CR3	Diode - Zener	(5.1 V)	70035527
CR4	Diode - Zener	(5.1 V)	70035527
CR5	Diode - Zener	(10 V)	70035514
CR6	Diode - Silicon		70035005
CR7	Diode - Silicon		70035005
CR8	Diode - Silicon		70035005
CR9	Diode - Silicon		70035005
CR10	Diode - Silicon		70035005
CR11	Diode - Silicon		70035005
CR12	Diode - Silicon		70035005
CR13	Diode - Silicon		70035005
F1	Fuse (8 Amp)		70072002
F2	Fuse (8 Amp)		70072002
L1	Inductor - Coil		21940701
P1	Wafer - Non-Polarizing	(4 CKT)	70074904
P2	Wafer - Polarizing	(5 CKT)	70075005
P3	Wafer - Polarizing	(4 CKT)	70075004
P4	Wafer - Polarizing	(4 CKT)	70075004
Q1	Transistor - Silicon (Dual)	(NPN)	70030301
Q2	Transistor - Silicon	(NPN)	70030008
Q3	Transistor - Silicon	(NPN)	70033006
Q4	Transistor - Silicon	(PNP)	70030104
Q5	Transistor - Silicon	(PNP)	70030104
Q6	Transistor - Silicon	(PNP)	70030403
Q7	Transistor - Silicon	(NPN)	70030008

Note: All resistors are ¼ watt 5%, unless otherwise noted.

R1	Resistor - Carbon	18 K Ω	79901183
R2	Resistor - Carbon	220 K Ω	79901224
R3	Resistor - Carbon	18 K Ω	79901183
R4	Resistor - Carbon	5.6 K Ω	79901562
R5	Resistor - Carbon	18 K Ω	79901183
R6	Resistor - Carbon	470 Ω	79901471
R7	Resistor - Carbon	2.2 Ω	79901222
R8	Resistor - Carbon	15 K Ω	79901153
R9	Resistor - Carbon	470 Ω	79901471
R10	Resistor - Carbon	1.5 K Ω	79901152
R11	Resistor - Carbon	2.2 K Ω	79901222
R12	Resistor - Potentiometer	10 K Ω	70040014
R13	Resistor - Carbon	100 Ω	79901101
R14	Resistor - Wire Wound	.3 Ω	70011805
R15	Resistor - Carbon	15 K Ω	79901153
R16	Resistor - Carbon	15 K Ω	79901153
R17	Resistor - Carbon	2.2 K Ω	79901222
R18	Resistor - Carbon	820 Ω	79901821
R19	Resistor - Carbon	47 Ω	79901470
R20	Resistor - Carbon	15 Ω	79901150
R21	Resistor - Carbon	180 Ω	79901181
R22	Resistor - Wire Wound	.3 Ω	70011805
R23	Resistor - Wire Wound	22 Ω	79920220
R24	Resistor - Carbon	180 Ω	79901181
R25	Resistor - Carbon	47 Ω	79901470
R26	Resistor - Carbon	47 Ω	79901470
R27	Resistor - Wire Wound	.3 Ω (5 W, 10%)	70011805
R28	Resistor - Carbon	180 Ω	79901181
R29	Resistor - Carbon	180 Ω	79901181
R30	Resistor - Wire Wound	.3 Ω (5 W, 10%)	70011805
R31	Resistor - Carbon	220 Ω	79901221
R32	Resistor - Carbon	4.7 K Ω	79901472
R33	Resistor - Carbon	470 Ω	79901471
R34	Resistor - Carbon	470 Ω	79901471

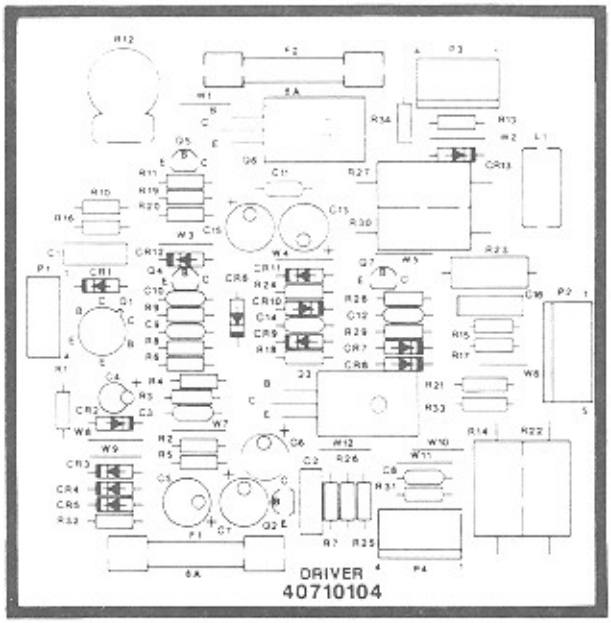

Figure 5-8B. Amplifier Driver Board Layout

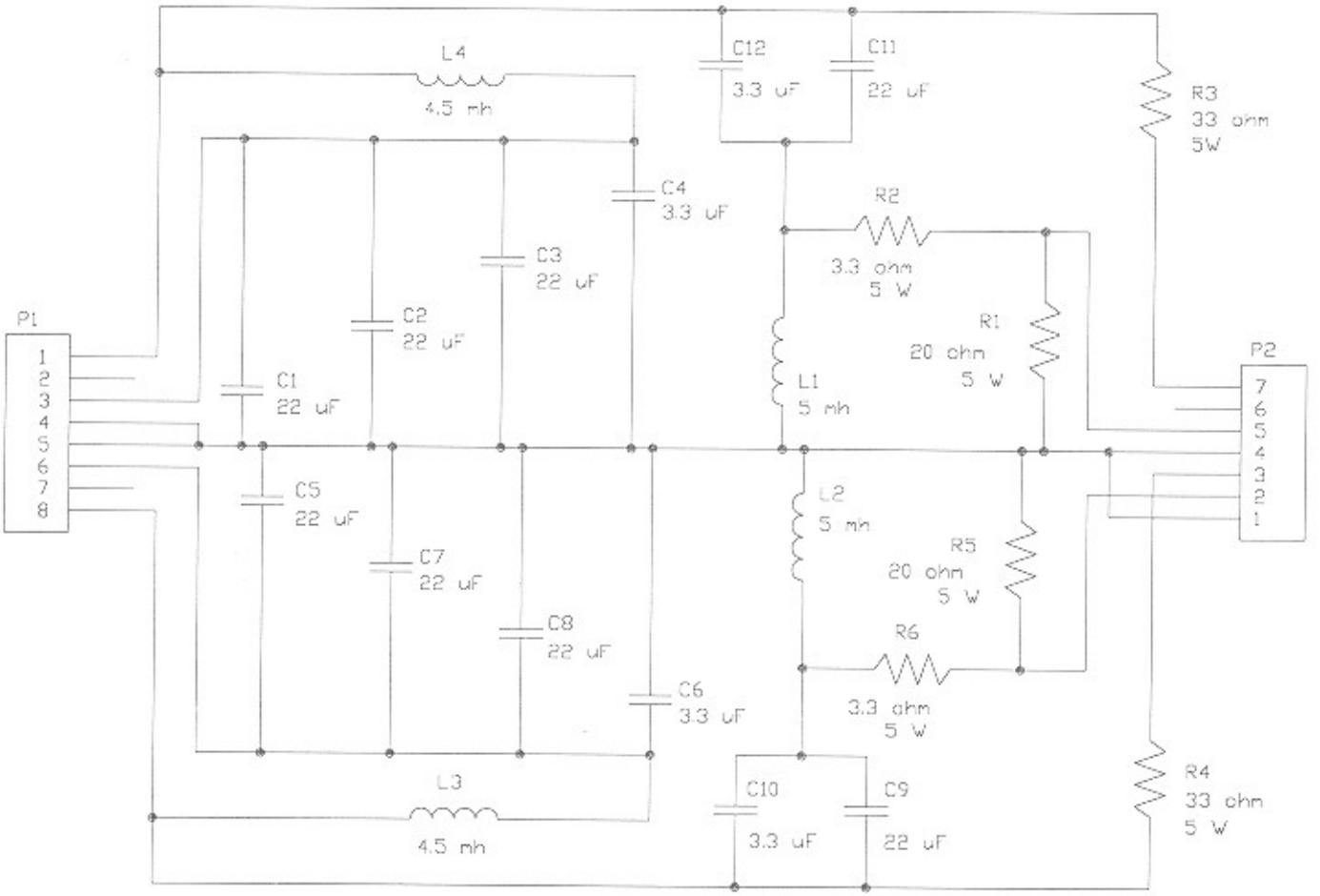

For Equivalent Engineering Drawing See 61052701-Q2 D

Figure 5-8C. Schematic Diagram - Crossover Network

COMPONENTS LIST FOR CROSSOVER NETWORK (61052701)-D

C1	CAPACITOR - BI-POLAR ELECTROLYTIC	22 µF	70022809 SEE NOTE
C2	CAPACITOR - BI-POLAR ELECTROLYTIC	22 µF	70022809 SEE NOTE
C3	CAPACITOR - BI-POLAR ELECTROLYTIC	22 µF	70022809 SEE NOTE
C4	CAPACITOR - BI-POLAR ELECTROLYTIC	3.3 µF	70022801
C5	CAPACITOR - BI-POLAR ELECTROLYTIC	22 µF	70022809 SEE NOTE
C6	CAPACITOR - BI-POLAR ELECTROLYTIC	3.3 µF	70022801
C7	CAPACITOR - BI-POLAR ELECTROLYTIC	22 µF	70022809 SEE NOTE
C8	CAPACITOR - BI-POLAR ELECTROLYTIC	22 µF	70022809 SEE NOTE
C9	CAPACITOR - BI-POLAR ELECTROLYTIC	22 µF	70022809
C10	CAPACITOR - BI-POLAR ELECTROLYTIC	3.3 µF	70022801
C11	CAPACITOR - BI-POLAR ELECTROLYTIC	22 µF	70022809
C12	CAPACITOR - BI-POLAR ELECTROLYTIC	3.3 µF	70022801
L1	INDUCTOR	5 mH	70041404 OR 70041302
L2	INDUCTOR	5 mH	70041404 OR 70041302
L3	INDUCTOR	4.5 mH	70041406 OR 70041301
L4	INDUCTOR	4.5 mH	70041406 OR 70041301
P1	HEADER - VERTICAL POLARIZED (8CKT)		70075008
P2	HEADER - VERTICAL POLARIZED (7CKT)		70075007
R1	RESISTOR - WIREWOUND 5W	20 Ω	70012514
R2	RESISTOR - WIREWOUND 5W	3.3 Ω	70012513
R3	RESISTOR - WIREWOUND 5W	33 Ω	70012512
R4	RESISTOR - WIREWOUND 5W	33 Ω	70012512
R5	RESISTOR - WIREWOUND 5W	20 Ω	70012514
R6	RESISTOR - WIREWOUND 5W	3.3 Ω	70012513

NOTE: THE FOLLOWING SUBSTITUTIONS ARE AUTHORIZED TO BENEFIT COST OR PROCUREMENT.

C1(22µF) + C2(22µF) + C3(22µF) + C4(3.3µF) = 69.3µF
C5(22µF) + C7(22µF) + C8(22µF) + C6(3.3µF) = 69.3µF

OR

C2(33µF) + C3(33µF) + C4(3.3µF) = 69.3µF
C7(33µF) + C8(33µF) + C6(3.3µF) = 69.3µF

C1 AND C5 NOT USED
EITHER OF THE ABOVE COMBINATIONS MAY BE USED TO OBTAIN THE NOMINAL 69.3µF. THE 33µF IS A 70022811.

AMPLIFIER FULL POWER OUTPUT VOLTAGES (PER CHANNEL)

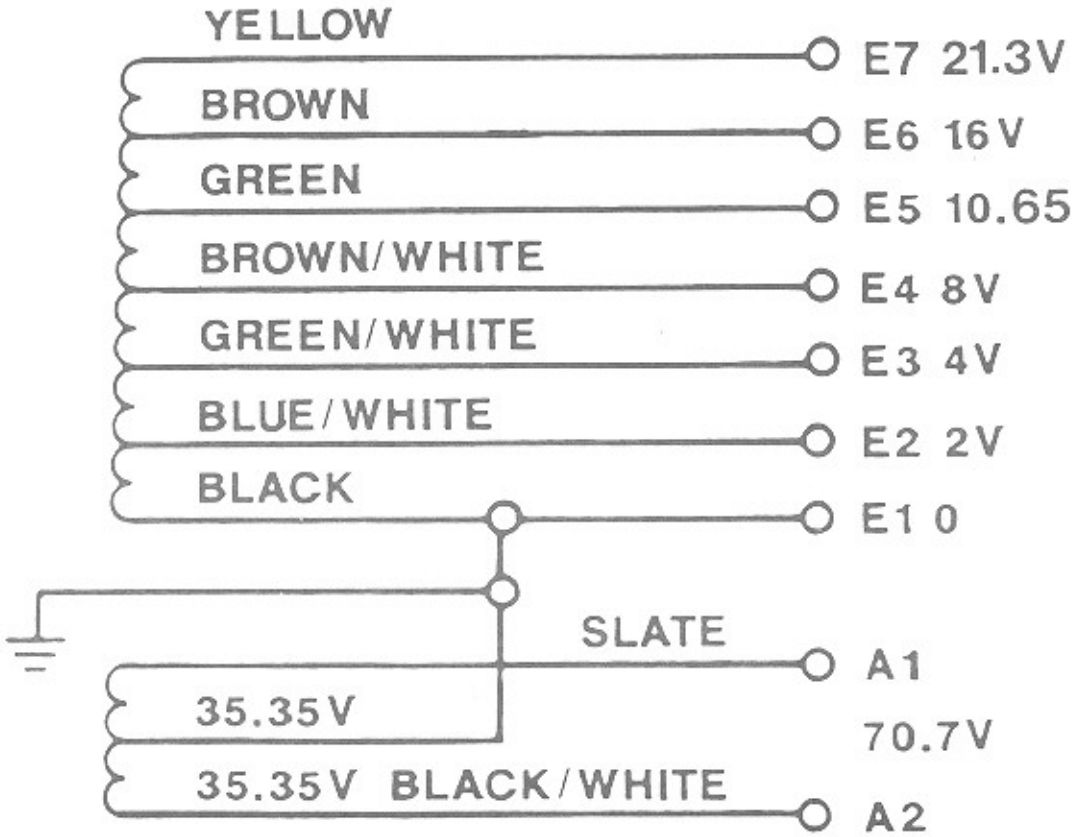

Figure 5-9. Transformer Output Voltages

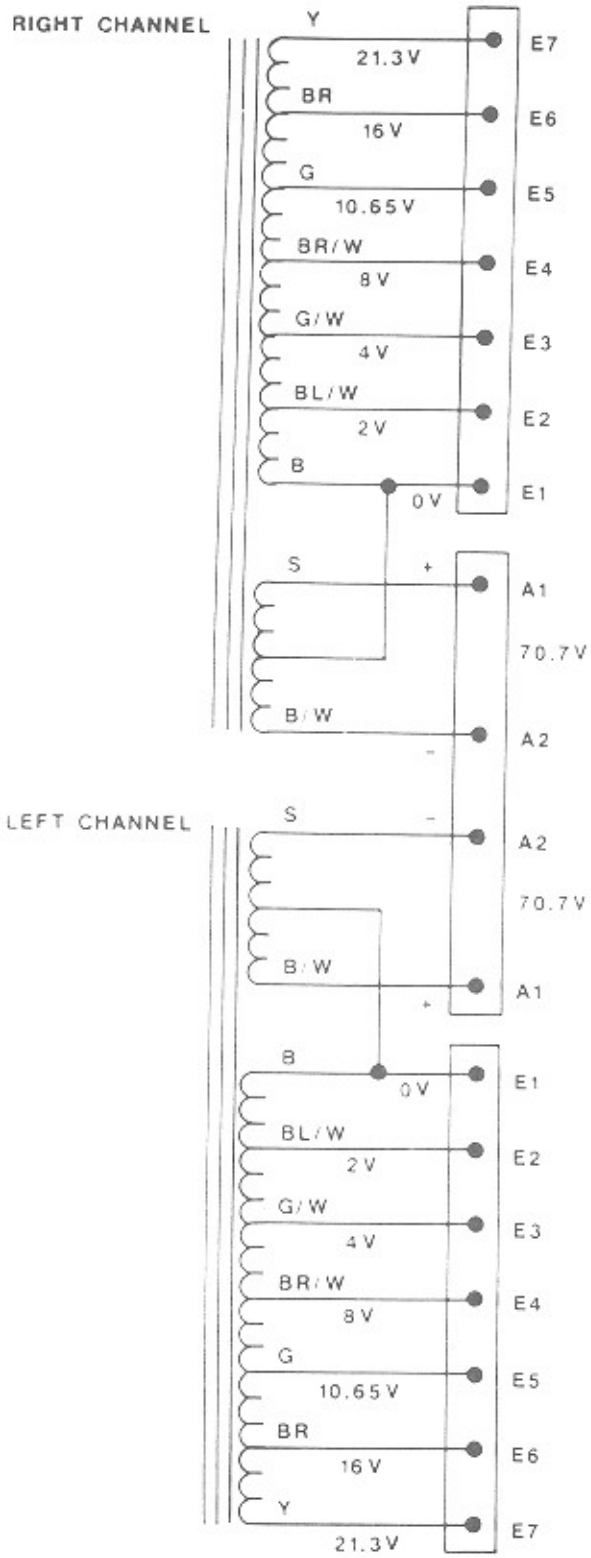

For Equivalent Engineering Drawing See 40832101-Q2 A

Figure 5-10. Transformer Wiring Diagram

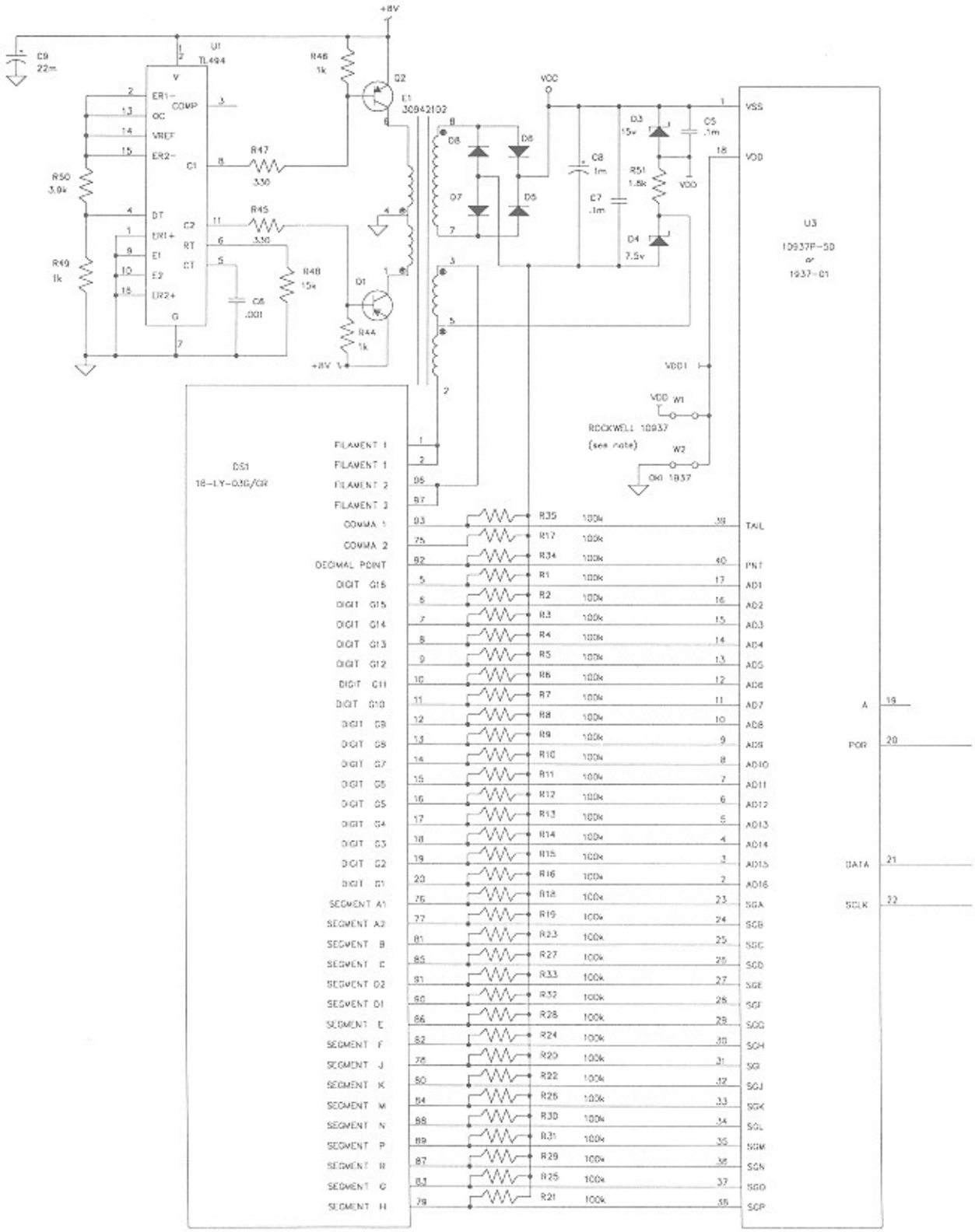

NOTE:

AT U3	W1	W2
30800237	USED	NOT USED
30800258	NOT USED	USED

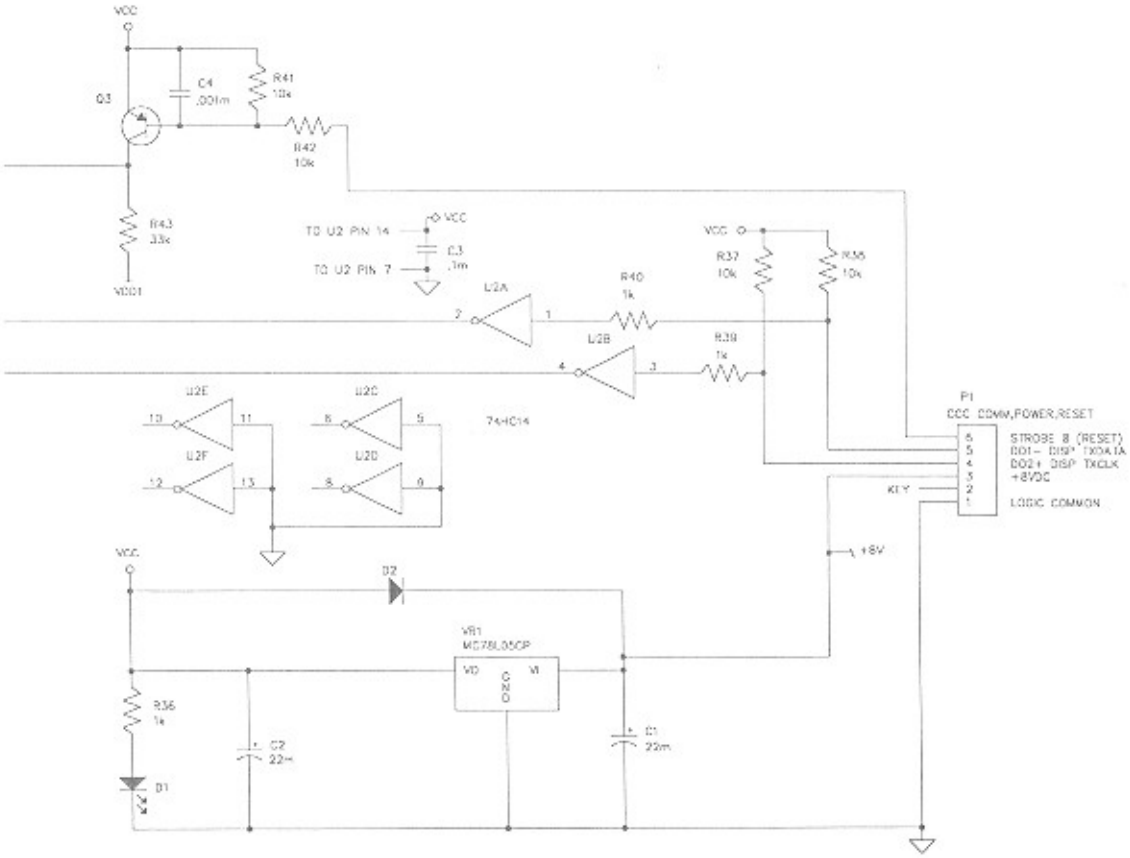

For Equivalent Engineering Drawing See 40855001-Q2

Figure 5-11. Display Assembly

COMPONENT LIST FOR THE DISPLAY ASSEMBLY (40855001)

C1	CAPACITOR-TANTALUM 15 VDC 10%	22 µF	70025104
C2	CAPACITOR-TANTALUM 15 VDC 10%	22 µF	70025104
C3	CAPACITOR-MONOLYTHIC CERAMIC	.1 µF	70028511
C4	CAPACITOR-MONOLYTHIC CERAMIC 10%	.001 µF	70028618
C5	CAPACITOR-MONOLYTHIC CERAMIC	.1 µF	70028511
C6	CAPACITOR-MONOLYTHIC CERAMIC 10%	.001 µF	70028618
C7	CAPACITOR-MONOLYTHIC CERAMIC	.1 µF	70028511
C8	CAPACITOR-ELECTROLYTIC 100 VDC 20%	1 µF	70028101
C9	CAPACITOR-TANTALUM 15 VDC 10%	22 µF	70025104
D1	DIODE - LIGHT EMITTING RED DIFFUSED		70035305
D2	DIODE - SILICON	1N4004	70035005
D3	DIODE - ZENER 15V 1/2W 5%	1N965B	70035522
D4	DIODE - ZENER 7.5V 1/2W 5%	1N958B	70035520
D5	DIODE - SILICON	1N4148	70035012
D6	DIODE - SILICON	1N4148	70035012
D7	DIODE - SILICON	1N4148	70035012
D8	DIODE - SILICON	1N4148	70035012
DS1	DISPLAY - VAC FLU (16 CHAR)	16-LY-03G	30933204
E1	TRANSFORMER DC-DC/AC	30942102	
P1	HEADER - POLARIZED .156 6 POSITION	70075006	
Q1	TRANSISTOR - SILICON PNP	MPSA56	70030104
Q2	TRANSISTOR - SILICON PNP	MPSA56	70030104
Q3	TRANSISTOR - SILICON PNP	MPSA56	70030104
R1-R35	RESISTOR - CARBON FILM 1/8W 5%	100 K	79905104
R36	RESISTOR - CARBON FILM 1/4W 5%	1 K	79901102
R37	RESISTOR - CARBON FILM 1/4W 5%	10 K	79901103
R38	RESISTOR - CARBON FILM 1/4W 5%	10 K	79901103
R39	RESISTOR - CARBON FILM 1/4W 5%	1 K	79901102
R40	RESISTOR - CARBON FILM 1/4W 5%	1 K	79901102
R41	RESISTOR - CARBON FILM 1/4W 5%	10 K	79901103
R42	RESISTOR - CARBON FILM 1/4W 5%	10 K	79901103
R43	RESISTOR - CARBON FILM 1/4W 5%	33 K	79901333
R44	RESISTOR - CARBON FILM 1/4W 5%	1 K	79901102
R45	RESISTOR - CARBON FILM 1/4W 5%	330 OHM	79901331
R46	RESISTOR - CARBON FILM 1/4W 5%	1 K	79901102
R47	RESISTOR - CARBON FILM 1/4W 5%	330 OHM	79901331
R48	RESISTOR - CARBON FILM 1/4W 5%	15 K	79901153
R49	RESISTOR - CARBON FILM 1/4W 5%	1 K	79901102
R50	RESISTOR - CARBON FILM 1/4W 5%	3.9 K	79901392
R51	RESISTOR - CARBON FILM 1/4W 5%	1.8 K	79901182

U1	I.C.-PWM CONTROL CIRCUIT	TL494	30800257
U2	SCHMITT TRIGGER INVERTER	74HC14I.C.-HEX	79940014
U3	DRIVER-DISPLAY (VAC FLU)	10937P-50	30800237 SEE NOTE
	OR		
	DRIVER-DISPLAY (VAC FLU)	MSC1937-01	30800258 SEE NOTE
VR1	REGULATOR-VOLTAGE (LINEAR IC)	MC78L05ACP	70036515
W1	WIRE - BARE		00503200 SEE NOTE
W2	WIRE - BARE		00503200 SEE NOTE

NOTE: INSERT W1 (W2 OPEN) IF ROCKWELL 10937 (30800237) AT U3.
INSERT W2 (W1 OPEN) IF OKI 1937 (30800258) AT U3.

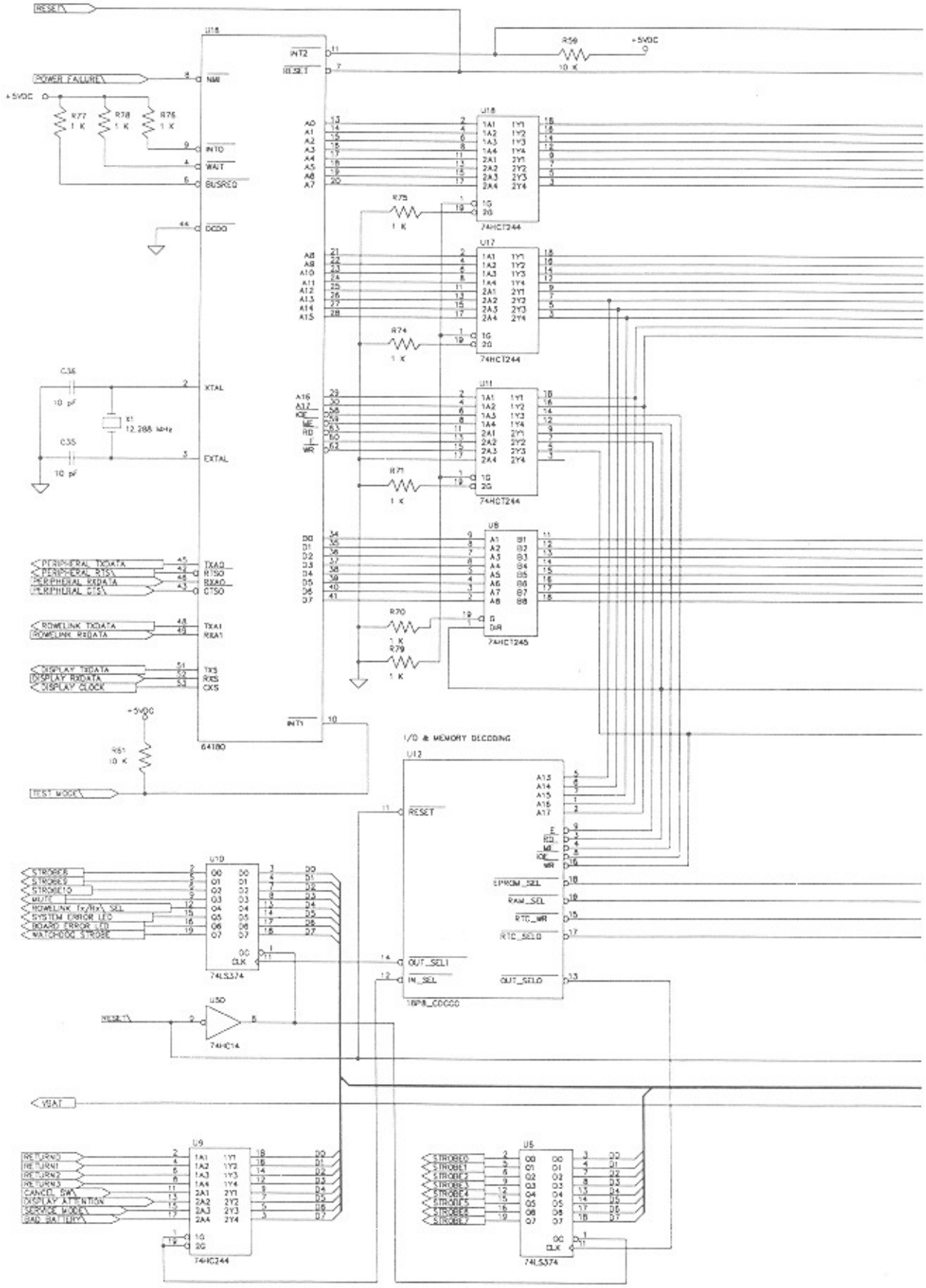
RESET\
POWER FAILURE\
+5VDC
R77 1 K
R78 1 K
R76 1 K
R59 10 K
U18
U17
U11
U8
74HCT244
74HCT245
64180
C36 10 pF
C35 10 pF
X1 12.288 MHz
XTAL
EXTAL
PERIPHERAL TXDATA
PERIPHERAL RTS\
PERIPHERAL RXDATA
PERIPHERAL CTS\
ROWLINK TXDATA
ROWLINK RXDATA
DISPLAY TXDATA
DISPLAY RXDATA
DISPLAY CLOCK
R61 10 K
TEST MODE\
I/O & MEMORY DECODING
U12
RESET
EPROM_SEL
RAM_SEL
RTC_WR
RTC_SEL0
OUT_SEL1
IN_SEL
OUT_SEL0
WPB_CDCCO
U10
74LS374
U50
74HC14
VBAT
U9
74HC244
U5
74LS374

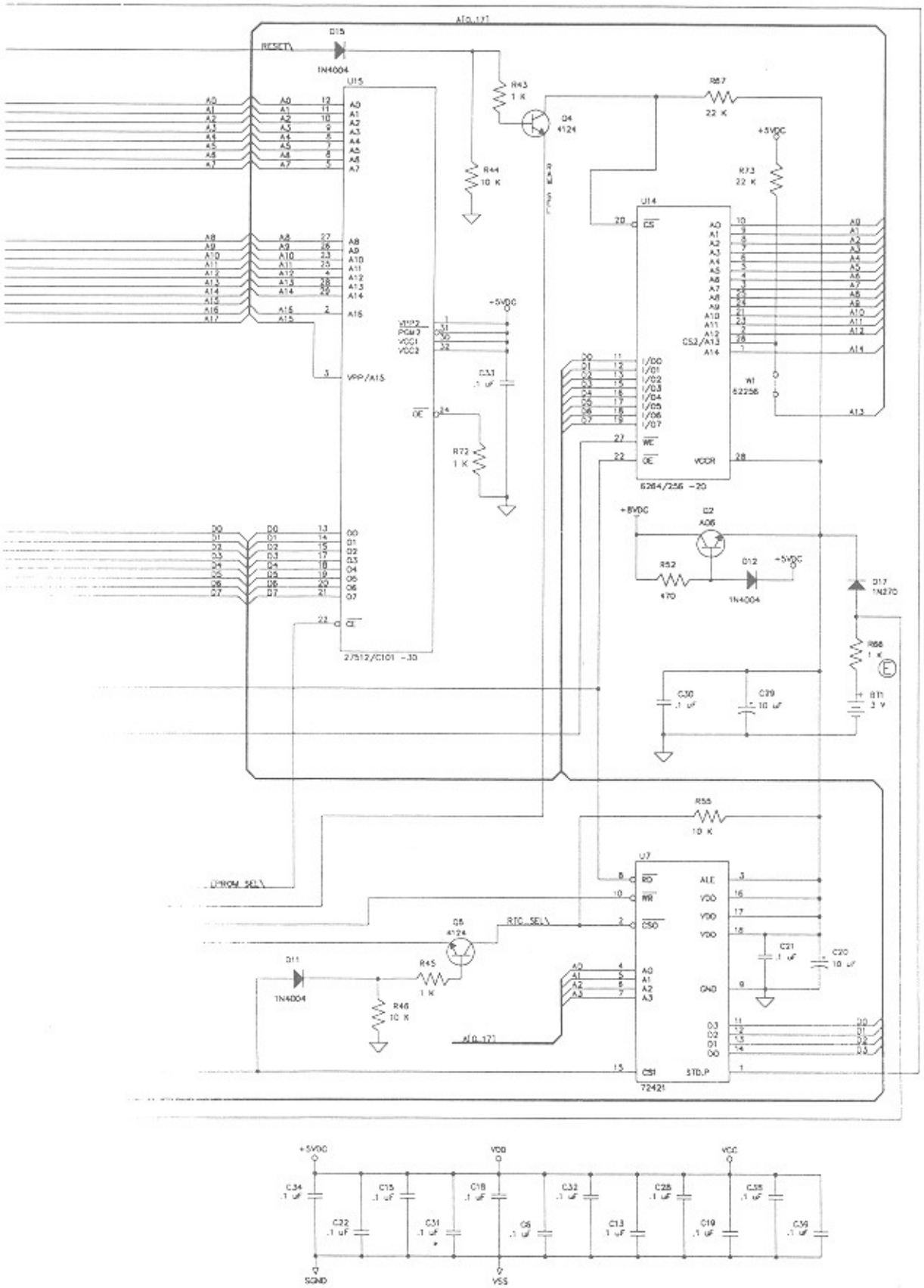

For Equivalent Engineering Drawing See 61031101-Q2 E

Figure 5-12A. Central Control Computer Schematic, Sheet 1

DISPLAY/KEYBOARD INTERFACE

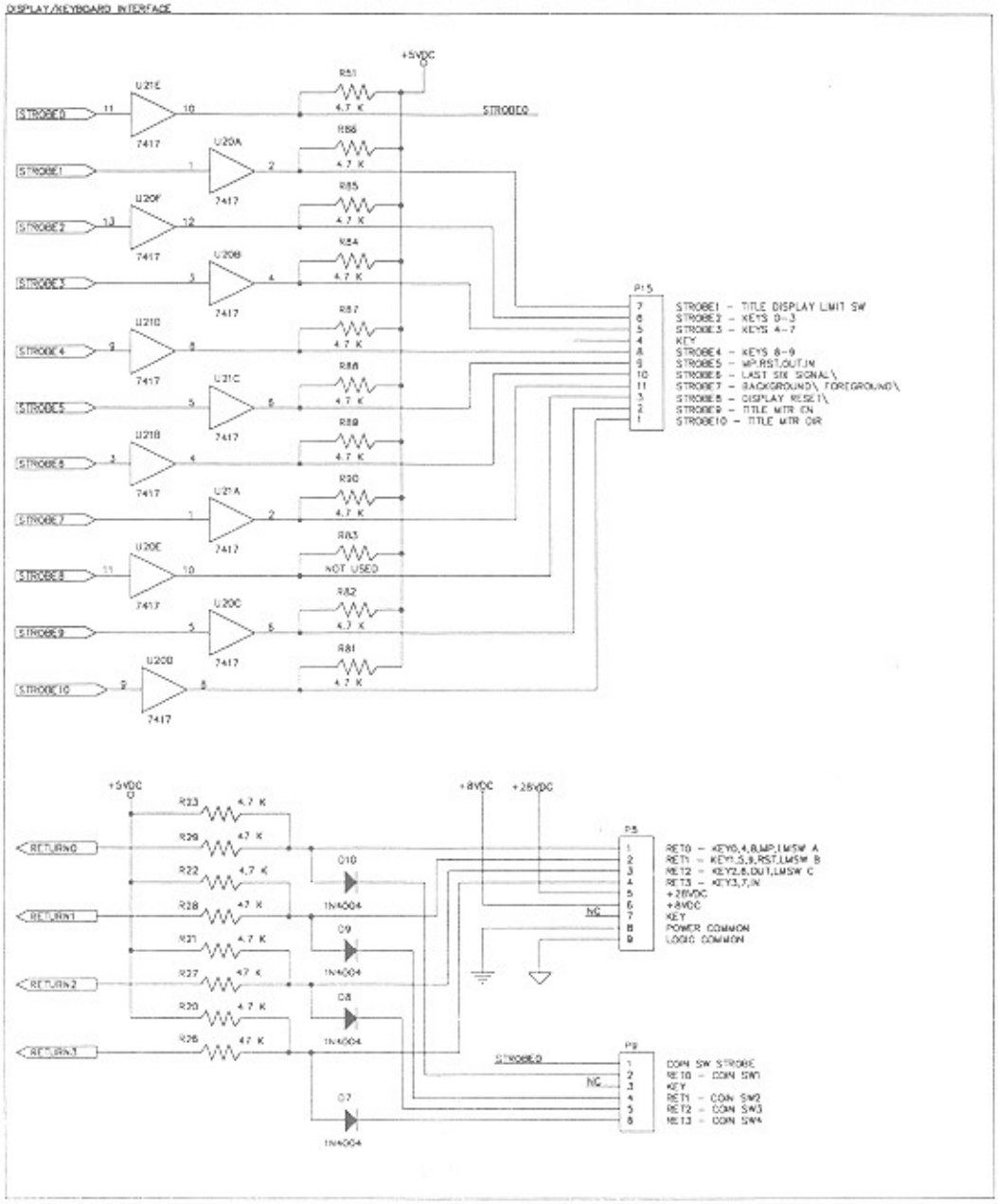

DISPLAY INTERFACE (RS422)

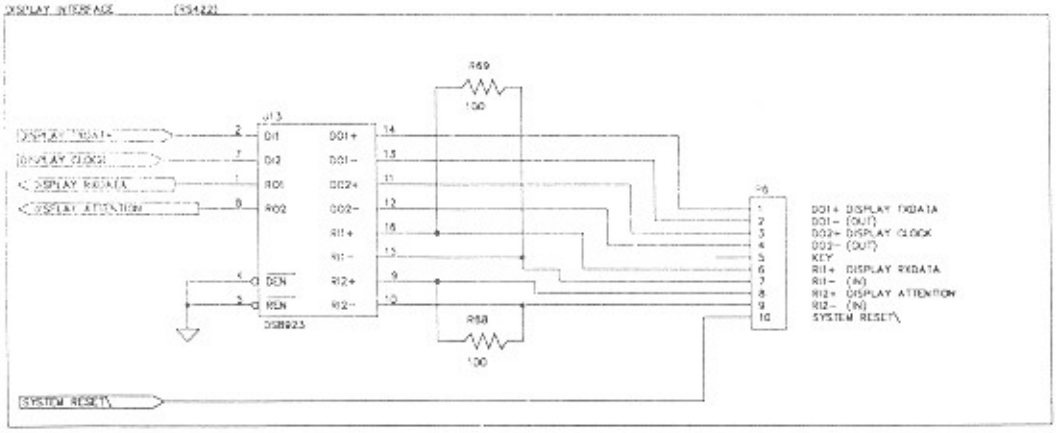

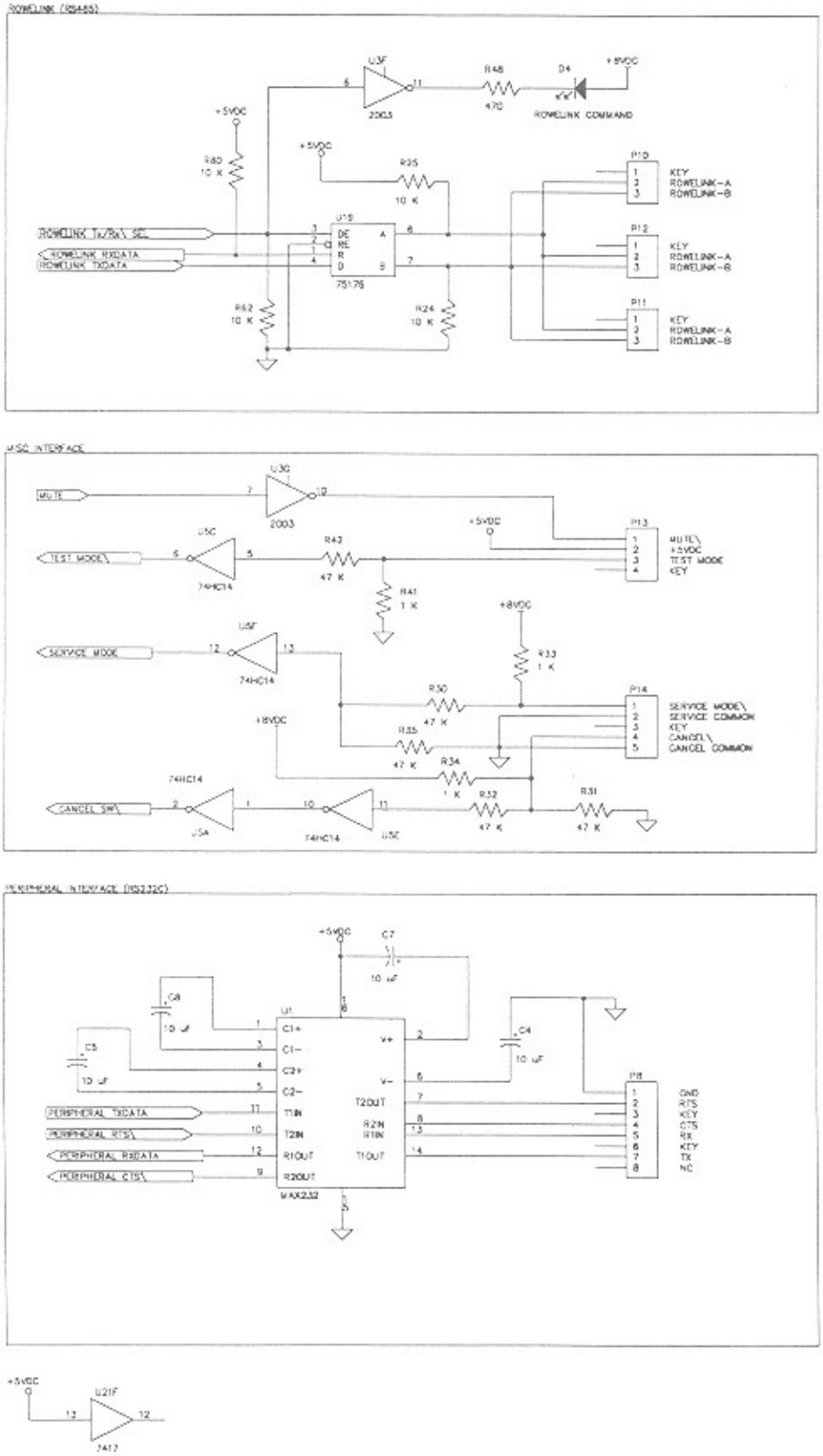

For Equivalent Engineering Drawing See 61031101-Q2 E

Figure 5-12A. Central Control Computer Schematic, Sheet 2

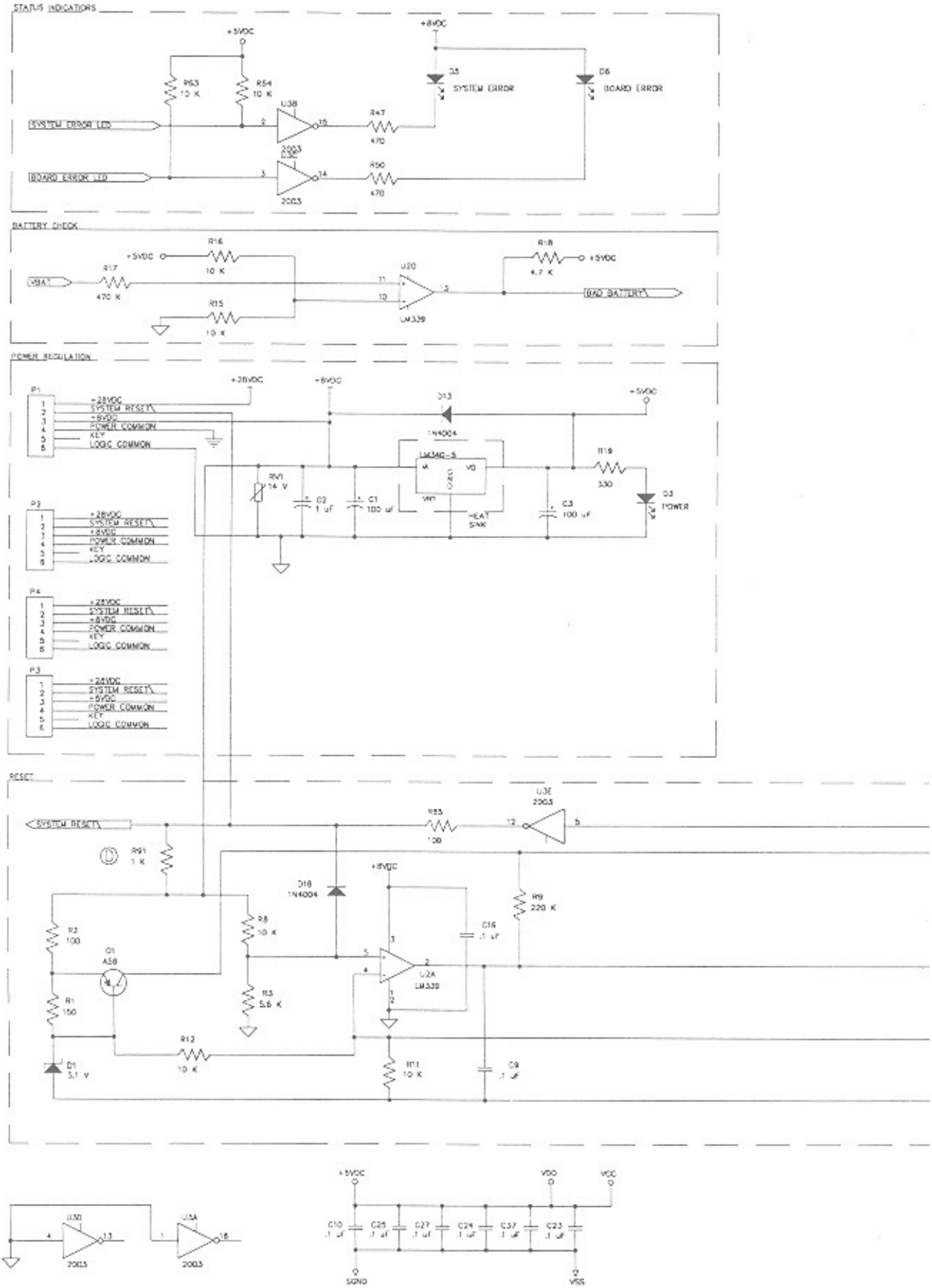
STATUS INDICATORS
+5VDC
+8VDC
R63 10 K
R64 10 K
U3B
2003
D5 SYSTEM ERROR
D6 BOARD ERROR
SYSTEM ERROR LED
BOARD ERROR LED
R47 470
R50 470
BATTERY CHECK
R16 10 K
R17 470 K
R15 10 K
R18 4.7 K
U20
LM339
VBAT
BAD BATTERY
POWER REGULATION
+28VDC
+8VDC
+5VDC
P1
P2
P4
P3
SYSTEM RESET
POWER COMMON
KEY
LOGIC COMMON
D13 1N4004
LM340-5
RV1 14 V
C2 1 uF
C1 100 uF
C3 100 uF
R19 330
D3 POWER
HEAT SINK
RESET
U3E 2003
R55 100
R91 1 K
D16 1N4004
R9 220 K
C16 .1 uF
R2 100
Q1 A58
R8 10 K
R3 5.6 K
R1 150
U2A LM339
R12 10 K
D1 5.1 V
R11 10 K
C9 .1 uF
U3D 2003
U3A 2003
VDD
VCC
C10 .1 uF
C25 .1 uF
C27 .1 uF
C24 .1 uF
C37 .1 uF
C23 .1 uF
SGND
VSS

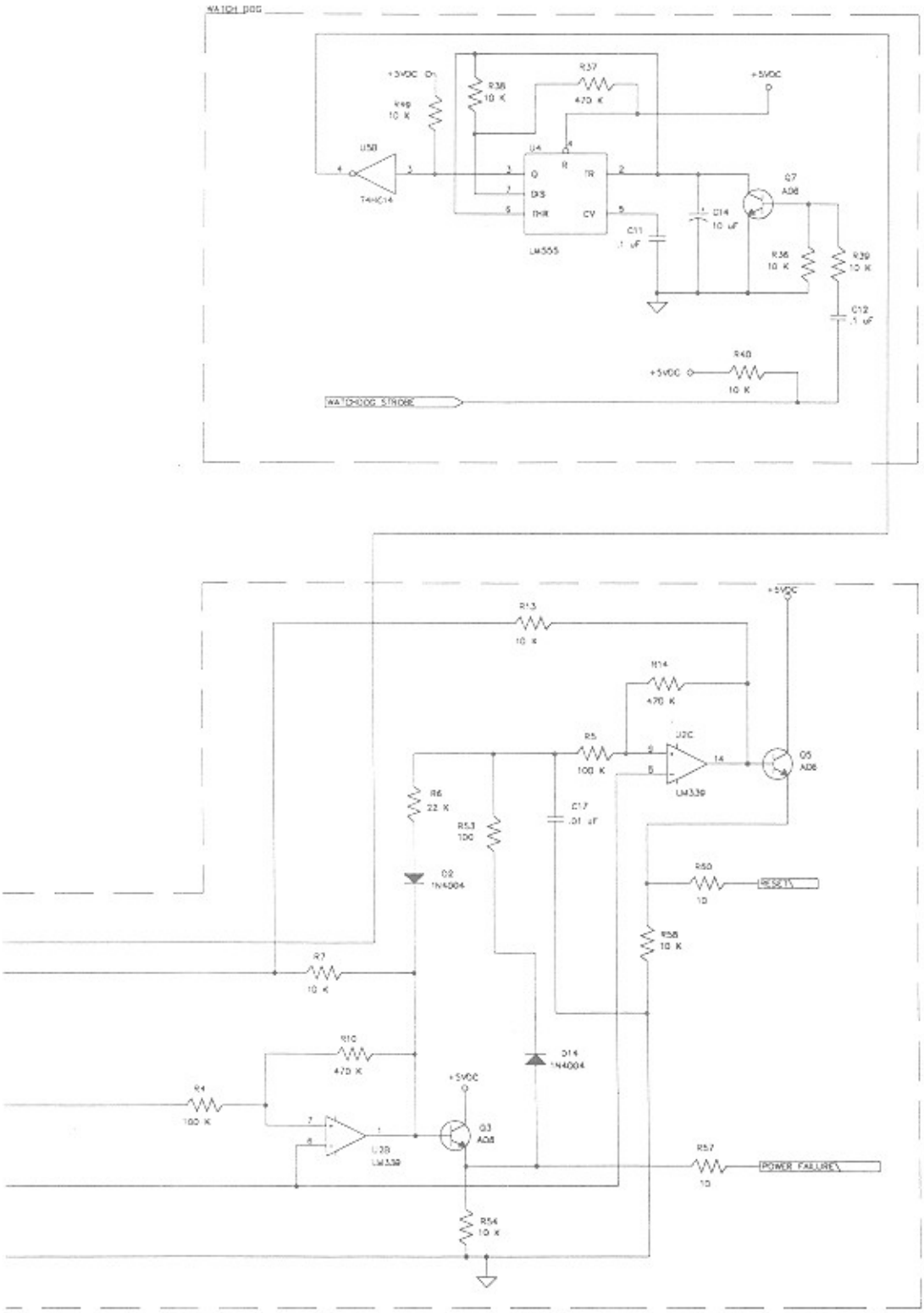

For Equivalent Engineering Drawing See 61031101-Q2 E

Figure 5-12A. Central Control Computer Schematic, Sheet 3

CD-100C C.C.C IC Power And Common Pin Chart					
Ref.	Generic Part #	Power		Common	
		+5 VDC	+8 VDC	Logic	Power
U1	MAX232	16	—	15	—
U2	LM339	—	3	12	—
U3	2003	—	—	8	—
U4	LM555	8	—	1	—
U5	74HC14	14	—	7	—
U6	74LS374	20	—	10	—
U7	72421	16,17,18	—	9	—
U8	74HCT245	20	—	10	—
U9	74HC244	20	—	10	—
U10	74LS374	20	—	10	—
U11	74HCT244	20	—	10	—
U12	18P8_CDCCC	20	—	10	—
U13	DS8923	3	—	6	—
U14	6264/6256	28	—	14	—
U15	27512/27C101	32,30	—	16	—
U16	64180	32	—	1,33	—
U17	74HCT244	20	—	10	—
U18	74HCT244	20	—	10	—
U19	75176	8	—	5	—
U20	7417	14	—	7	—
U21	7417	14	—	7	—

For Equivalent Engineering Drawing See 61031101-Q2 E

Figure 5-12A. Central Control Computer Schematic, Sheet 4

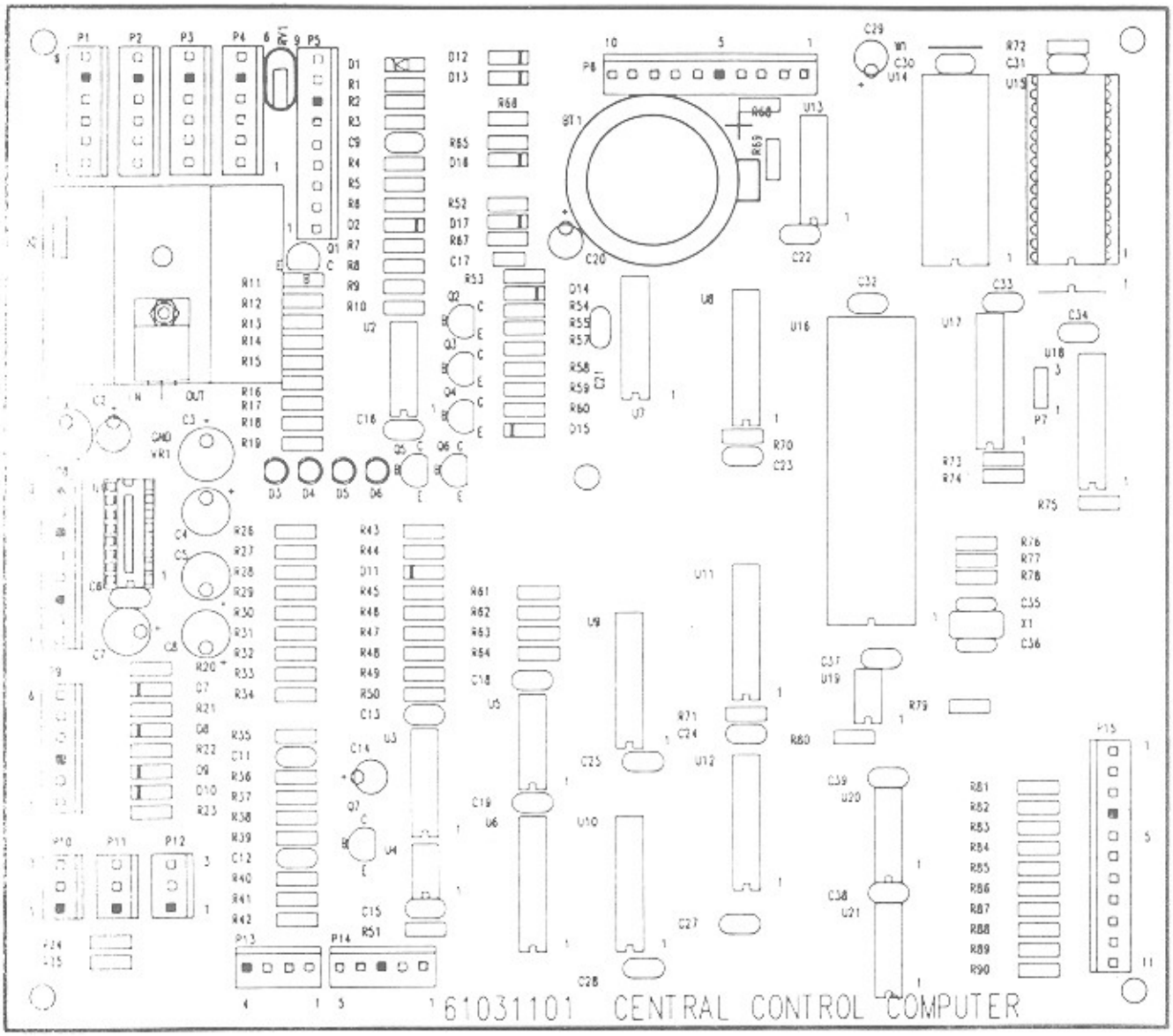

Figure 5-12B. Central Control Computer Circuit Board Layout

COMPONENT LIST FOR CENTRAL CONTROL COMPUTER (61031101-S)

BT1	Battery - Lithium		160 mah 3V (with holder)	30873101
		OR		
			750 mah 3V	40788901
C1	Capacitor - Electrolytic		100 MF	70023814
C2	Capacitor - Tantalum		1 MF	70025121
C3	Capacitor - Electrolytic		100 MF	70023814
C4	Capacitor - Electrolytic		10 MF	70023808
C5	Capacitor - Electrolytic		10 MF	70023808
C6	Capacitor - Monolithic Ceramic		.1 MF	70028511
C7	Capacitor - Electrolytic		10 MF	70023808
C8	Capacitor - Electrolytic		10 MF	70023808
C9	Capacitor - Monolithic Ceramic		.1 MF	70028511
C10	NOT USED			
C11	Capacitor - Monolithic Ceramic		.1 MF	70028511
C12	Capacitor - Monolithic Ceramic		.1 MF	70028511
C13	Capacitor - Monolithic Ceramic		.1 MF	70028511
C14	Capacitor - Electrolytic		10 MF	70023808
C15	Capacitor - Monolithic Ceramic		.1 MF	70028511
C16	Capacitor - Monolithic Ceramic		.1 MF	70028511
C17	Capacitor - Monolithic Ceramic		.01 MF	70028502
C18	Capacitor - Monolithic Ceramic		.1 MF	70028511
C19	Capacitor - Monolithic Ceramic		.1 MF	70028511
C20	Capacitor - Electrolytic		10 MF	70023808
C21	Capacitor - Monolithic Ceramic		.1 MF	70028511
C22	Capacitor - Monolithic Ceramic		.1 MF	70028511
C23	Capacitor - Monolithic Ceramic		.1 MF	70028511
C24	Capacitor - Monolithic Ceramic		.1 MF	70028511
C25	Capacitor - Monolithic Ceramic		.1 MF	70028511
C27	Capacitor - Monolithic Ceramic		.1 MF	70028511
C28	Capacitor - Monolithic Ceramic		.1 MF	70028511
C29	Capacitor - Electrolytic		10 MF	70023808
C30	Capacitor - Monolithic Ceramic		.1 MF	70028511
C31	Capacitor - Monolithic Ceramic		.1 MF	70028511
C32	Capacitor - Monolithic Ceramic		.1 MF	70028511
C33	Capacitor - Monolithic Ceramic		.1 MF	70028511
C34	Capacitor - Monolithic Ceramic		.1 MF	70028511
C35	Capacitor - Monolithic Ceramic		10 PF	70028701
C36	Capacitor - Monolithic Ceramic		10 PF	70028701
C37	Capacitor - Monolithic Ceramic		.1 MF	70028511
C38	Capacitor - Monolithic Ceramic		.1 MF	70028511
C39	Capacitor - Monolithic Ceramic		.1 MF	70028511
D1	Diode - Zener (5.1 V)			70035526
D2	Diode - Silicon		IN4004	70035005
D3	Diode - Light Emitting			70035305
D4	Diode - Light Emitting			70035305
D5	Diode - Light Emitting			70035305
D6	Diode - Light Emitting			70035305
D7	Diode - Silicon		IN4004	70035005
D8	Diode - Silicon		IN4004	70035005
D9	Diode - Silicon		IN4004	70035005
D10	Diode - Silicon		IN4004	70035005
D11	Diode - Silicon		IN4004	70035005

D12	Diode - Silicon	IN4004	70035005
D13	Diode - Silicon	IN4004	70035005
D14	Diode - Silicon	IN4004	70035005
D15	Diode - Silicon	IN4004	70035005
D16	Diode - Silicon	IN4004	70035005
D17	Diode - Germanium	IN270	70035101
P1	Wafer - Polarizing	6 CKT	70075006
P2	Wafer - Polarizing	6 CKT	70075006
P3	Wafer - Polarizing	6 CKT	70075006
P4	Wafer - Polarizing	6 CKT	70075006
P5	Wafer - Polarizing	9 CKT	70075009
P6	Wafer - Polarizing	10 CKT	70075010
P7	NOT USED		
P8	Wafer - Polarizing	8 CKT	70075008
P9	Wafer - Polarizing	6 CKT	70075006
P10	Wafer - Polarizing	3 CKT	70075003
P11	Wafer - Polarizing	3 CKT	70075003
P12	Wafer - Polarizing	3 CKT	70075003
P13	Wafer - Polarizing	4 CKT	70075004
P14	Wafer - Polarizing	5 CKT	70075005
P15	Wafer - Polarizing	11 CKT	70075011
Q1	Transistor - Silicon (PNP)		70030104
Q2	Transistor - Silicon (NPN)		70030008
Q3	Transistor - Silicon (NPN)		70030008
Q4	Transistor - Silicon (NPN)		70031301
Q5	Transistor - Silicon (NPN)		70030008
Q6	Transistor - Silicon (NPN)		70031301
Q7	Transistor - Silicon (NPN)		70030008

Note: All resistors are ¼ watt 5%, unless otherwise noted.

R1	Resistor - Carbon	150 Ω	79901151
R2	Resistor - Carbon	100 Ω	79901101
R3	Resistor - Carbon	5.6 K Ω (¼ W, 2%)	79902562
R4	Resistor - Carbon	100 K Ω	79901104
R5	Resistor - Carbon	100 K Ω	79901104
R6	Resistor - Carbon	22 K Ω	79901223
R7	Resistor - Carbon	10 K Ω	79901103
R8	Resistor - Carbon Film	10 K Ω (¼ W, 2%)	79902103
R9	Resistor - Carbon	220 K Ω	79901224
R10	Resistor - Carbon	470 K Ω	79901474
R11	Resistor - Carbon Film	10 K Ω (¼ W, 2%)	79902103
R12	Resistor - Carbon Film	10 K Ω (¼ W, 2%)	79902103
R13	Resistor - Carbon	10 K Ω	79901103
R14	Resistor - Carbon	470 K Ω	79901474
R15	Resistor - Carbon	10 K Ω	79901103
R16	Resistor - Carbon	10 K Ω	79901103
R17	Resistor - Carbon	470 K Ω	79901474
R18	Resistor - Carbon	4.7 K Ω	79901472
R19	Resistor - Carbon	330 Ω	79901331
R20	Resistor - Carbon	4.7 K Ω	79901472
R21	Resistor - Carbon	4.7 K Ω	79901472
R22	Resistor - Carbon	4.7 K Ω	79901472

R25	Resistor - Carbon	10 K Ω	79901103
R26	Resistor - Carbon	47 K Ω	79901473
R27	Resistor - Carbon	47 K Ω	79901473
R28	Resistor - Carbon	47 K Ω	79901473
R29	Resistor - Carbon	47 K Ω	79901473
R30	Resistor - Carbon	47 K Ω	79901473
R31	Resistor - Carbon	47 K Ω	79901473
R32	Resistor - Carbon	47 K Ω	79901473
R33	Resistor - Carbon	1 K Ω	79901102
R34	Resistor - Carbon	1 K Ω	79901102
R35	Resistor - Carbon	47 K Ω	79901473
R36	Resistor - Carbon	10 K Ω	79901103
R37	Resistor - Carbon	470 K Ω	79901474
R38	Resistor - Carbon	10 K Ω	79901103
R39	Resistor - Carbon	10 K Ω	79901103
R40	Resistor - Carbon	10 K Ω	79901103
R41	Resistor - Carbon	1 K Ω	79901102
R42	Resistor - Carbon	47 K Ω	79901473
R43	Resistor - Carbon	1 K Ω	79901102
R44	Resistor - Carbon	10 K Ω	79901103
R45	Resistor - Carbon	1 K Ω	79901102
R46	Resistor - Carbon	10 K Ω	79901103
R47	Resistor - Carbon	470 Ω	79901471
R48	Resistor - Carbon	470 Ω	79901471
R49	Resistor - Carbon	10 K Ω	79901103
R50	Resistor - Carbon	470 Ω	79901471
R51	Resistor - Carbon	4.7 K Ω	79901472
R52	Resistor - Carbon	470 Ω	79901471
R53	Resistor - Carbon	100 Ω	79901101
R54	Resistor - Carbon	10 K Ω	79901103
R55	Resistor - Carbon	10 K Ω	79901103
R57	Resistor - Carbon	10 Ω	79901100
R58	Resistor - Carbon	10 K Ω	79901103
R59	Resistor - Carbon	10 K Ω	79901103
R60	Resistor - Carbon	10 Ω	79901100
R61	Resistor - Carbon	10 K Ω	79901103
R62	Resistor - Carbon	10 K Ω	79901103
R63	Resistor - Carbon	10 K Ω	79901103
R64	Resistor - Carbon	10 K Ω	79901103
R65	Resistor - Carbon	100 Ω	79901101
R66	Resistor - Carbon	1 K Ω	79901102
R67	Resistor - Carbon	22 K Ω	79901223
R68	Resistor - Carbon	100 Ω	79901101
R69	Resistor - Carbon	100 Ω	79901101
R70	Resistor - Carbon	1 K Ω	79901102
R71	Resistor - Carbon	1 K Ω	79901102
R72	Resistor - Carbon	1 K Ω	79901102
R73	Resistor - Carbon	22 K Ω	79901223
R74	Resistor - Carbon	1 K Ω	79901102
R75	Resistor - Carbon	1 K Ω	79901102
R76	Resistor - Carbon	1 K Ω	79901102
R77	Resistor - Carbon	1 K Ω	79901102
R78	Resistor - Carbon	1 K Ω	79901102
R79	Resistor - Carbon	1 K Ω	79901102
R80	Resistor - Carbon	10 K Ω	79901103

R81	Resistor - Carbon	4.7 K Ω	79901472
R82	Resistor - Carbon	4.7 K Ω	79901472
R83	NOT USED		
R84	Resistor - Carbon	4.7 K Ω	79901472
R85	Resistor - Carbon	4.7 K Ω	79901472
R86	Resistor - Carbon	4.7 K Ω	79901472
R87	Resistor - Carbon	4.7 K Ω	79901472
R88	Resistor - Carbon	4.7 K Ω	79901472
R89	Resistor - Carbon	4.7 K Ω	79901472
R90	Resistor - Carbon	4.7 K Ω	79901472
R91	Resistor - Carbon	1 K Ω	79901102
RV1	Metal Oxide Varistor	14 VDC	70037505 70037507
U1	NOT USED		
U2	I.C. - Quad Comparator (LM339)	(3302)	70036801
U3	I.C. - Darlington Array	(2003)	70036901
U4	I.C. - Timer	(LM555)	70033801
U5	I.C. - HCT (Hex Schmitt Trigger)	74HC14	79940014
U6	I.C. - Octal Edge Triggered F/F	74LS374	70037111
U7	I.C. - Calendar Clock	74HCT245	79930245
U9	I.C. - HC-Tristate Octal Buffer (Octal Bus Transceiver)	74HC244	79940244
U10	I.C. - Octal Edge Triggered F/F	74LS374	70037111
U11	I.C. - HCT (Octal Buffer/Line Driver)	74HCT244	79930244
U12	I.C. - PAL 18P8-CDCCC		30800232
U13	I.C. - RS-422 Dual Driver/Rcvr	DS8923	30800230
U14	I.C. - CMOS RAM 8K X 8	6264	70036604
U15	I.C. - 64K X 8 EPROM	27512	70039903
U16	I.C. - Microprocessor	64180	70039126
U17	I.C. - HCT (Octal Buffer/Line DRIVER)	74HCT244	79930244
U18	I.C. - HCT (octal Buffer/Line Driver)	74HCT244	79930244
U19	I.C. - Transceiver (RS-485)	75176	70037801
U20	I.C. - TTL Buffer (Open Collector)	7417	70036305
U21	I.C. - TTL Buffer (Open Collector)	7417	70036305
VR1	Regulator - Voltage (Linear I.C.)	LM340-5	70036505
W1	Not Used		
X1	Crystal - Quartz (12.288 Mhz)		25167314

The chart below shows the various combinations of strobes (outputs from the CCC) and returns (inputs to the CCC) and their corresponding functions.

Strobes 0 through 5 appear on Returns 0 through 3 when the indicated switches are activated.

For Example: If you need to be sure that Key 5 is working, find Key 5 in table 5-3. This matrix entry indicates that, when Strobe 3 is active and Key 5 is pressed, Return 1 becomes active.

Not all of the strobes and returns operate in this matrix mode; Returns 4 through 7 and Strobes 7 through 15 have unique functions, which are listed in the table.

Table 5-3. CD-100C CCC I/O Matrix

Outputs		Inputs							
Strobes	Dedicated	Returns				Dedicated			
		0	1	2	3	4	5	6	7
0		5¢ Coin Switch	10¢ Coin Switch	25¢ Coin Switch	50¢ Coin Switch	Cancel Switch	Display Attention	Service Switch	Low Battery Det.
1		Title Disp. Limit	Title Disp. Index	Reserved	UK Defaults				
2		Key 0	Key 1	Key 2	Key 3				
3		Key 4	Key 5	Key 6	Key 7				
4		Key 8	Key 9		Audit Report Start Button				
5		POPULAR	RESET	OUT	IN				
	6	Fade volume signal							
	7	Background music active							
	8	Display Reset - Controls hardware reset on the display driver chip							
	9	Sends speed info. to motor chip							
	10	Sends motor info. to motor chip							
	11	Mute							
	12	ROWELINK Tx/$\overline{\text{R}}$x Select							
	13	SYSTEM ERROR LED							
	14	BOARD ERROR LED							
	15	Watchdog Strobe							

This page intentionally left blank.

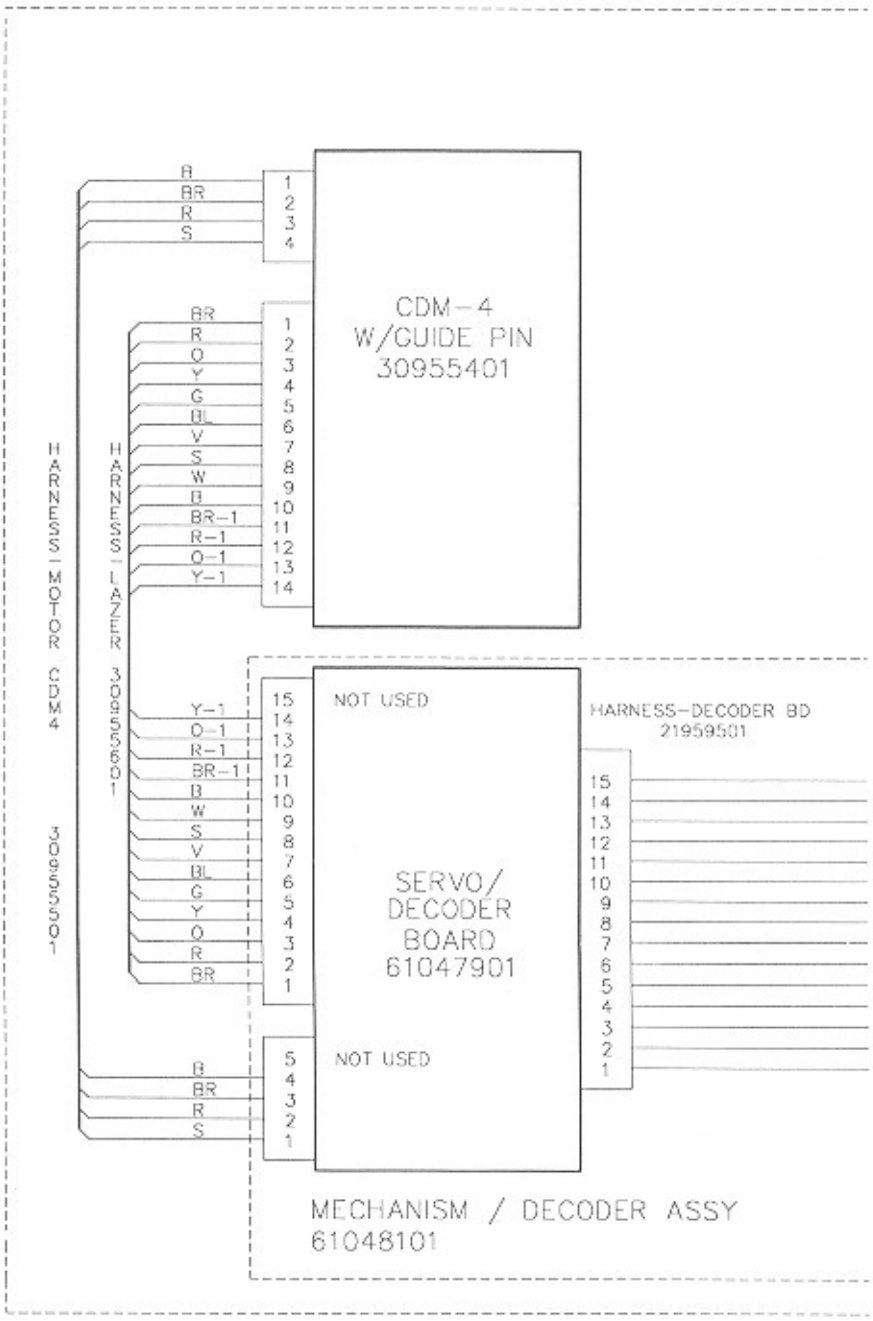
CDM-4
W/GUIDE PIN
30955401
HARNESS-MOTOR CDM4
30955501
HARNESS-LAZER
30955601
NOT USED
SERVO/
DECODER
BOARD
61047901
NOT USED
HARNESS-DECODER BD
21959501
MECHANISM / DECODER ASSY
61048101

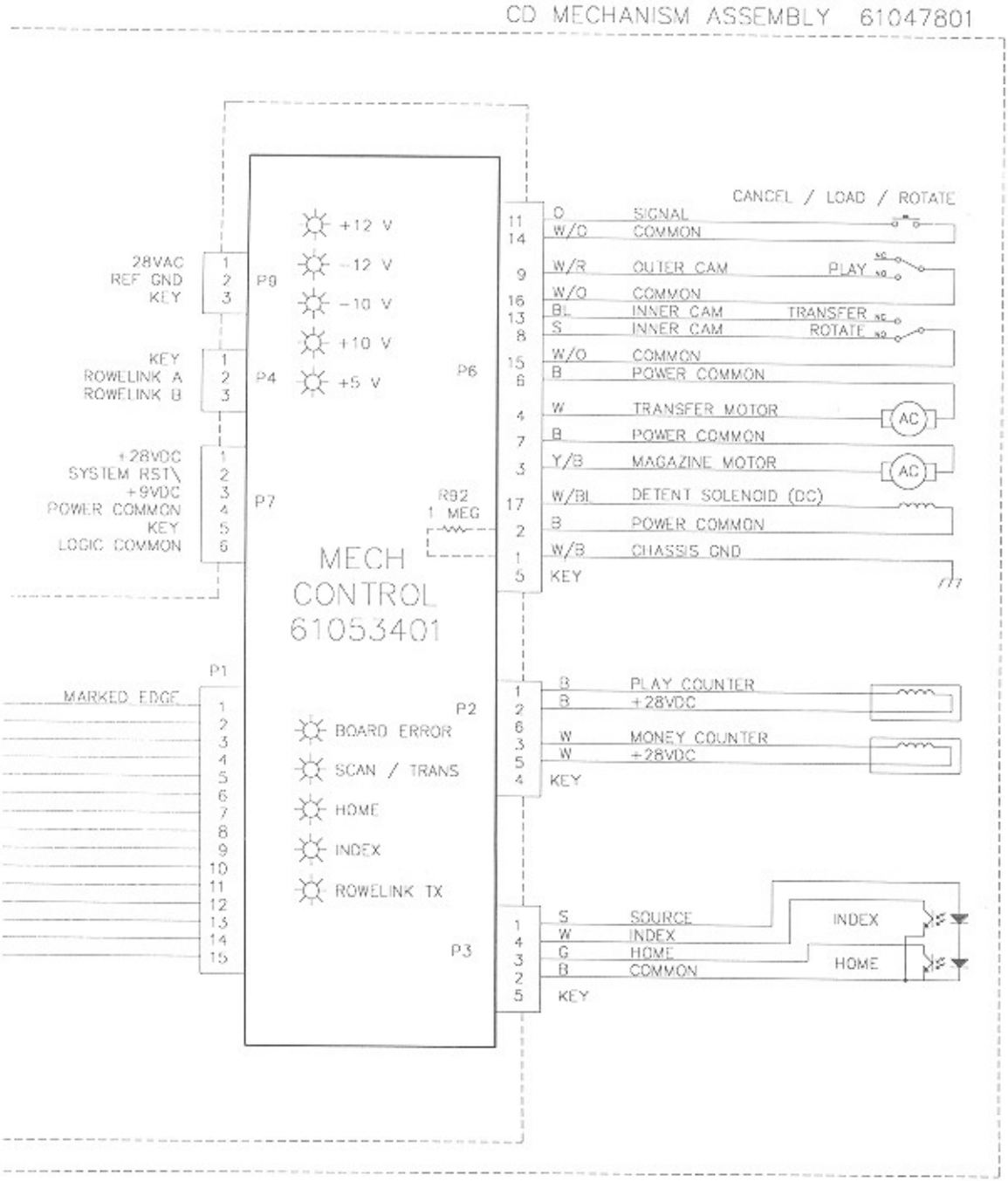

61047801-Q7 B

Figure 5-13A. Mechanism Control Assembly Block Diagram

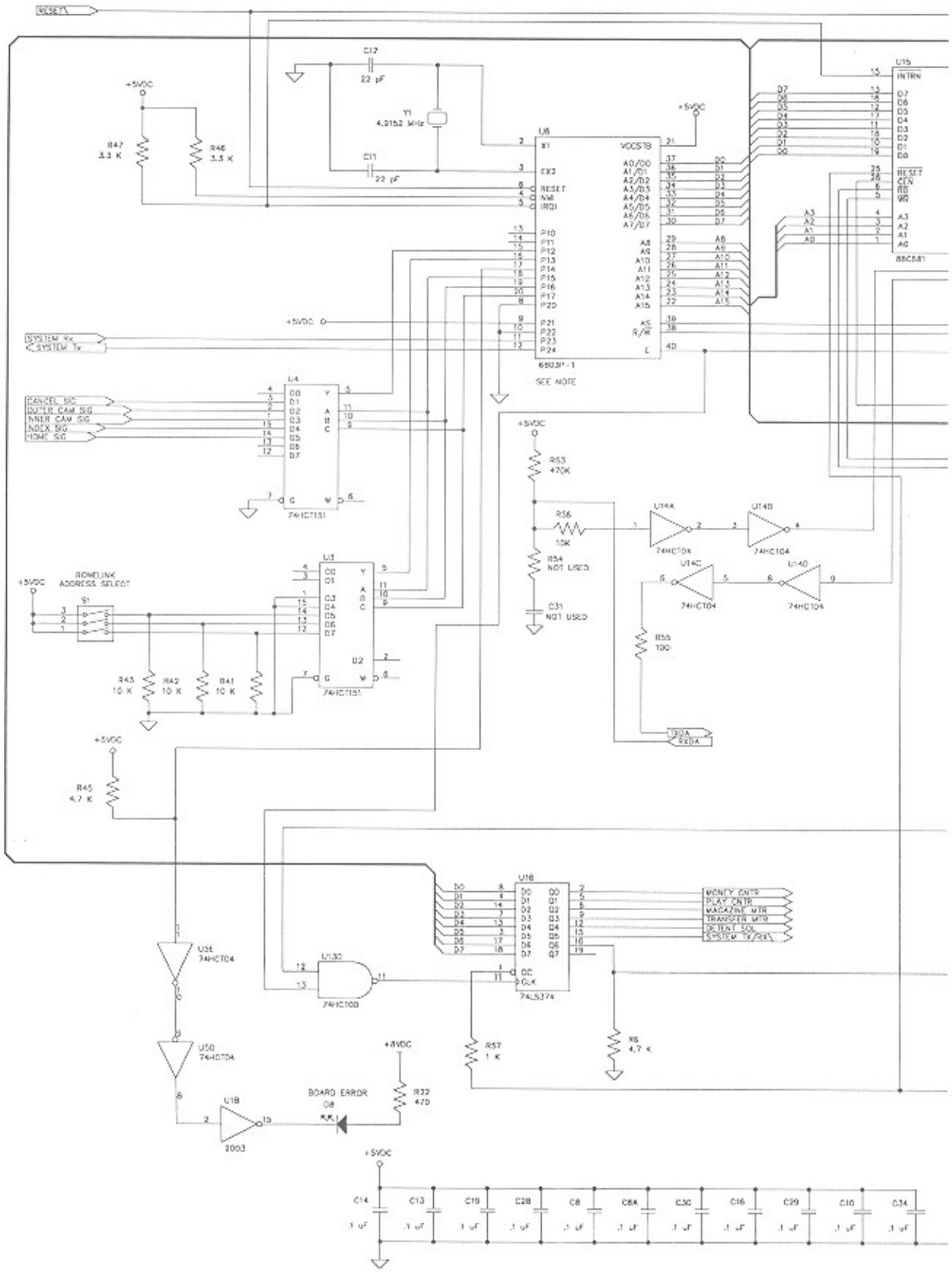
RESET\
+5VDC
R47 3.3 K
R46 3.3 K
C12 22 pF
C11 22 pF
Y1 4.0152 MHz
U6
VCCSTB
EX2
RESET
NMI
IRQ1
P10
P11
P12
P13
P14
P15
P16
P17
P20
P21
P22
P23
P24
A0/D0
A1/D1
A2/D2
A3/D3
A4/D4
A5/D5
A6/D6
A7/D7
A8
A9
A10
A11
A12
A13
A14
A15
R/W
E
SEE NOTE
U15
INTRN
RESET
CEN
RD
WR
A3
A2
A1
A0
88C681
SYSTEM Rx
SYSTEM Tx
U4
CANCEL SIG
OUTER CAM SIG
INNER CAM SIG
INDEX SIG
HOME SIG
74HCT151
U3
ROMLINK ADDRESS SELECT
S1
R43 10 K
R42 10 K
R41 10 K
R53 470K
R56 10K
R54 NOT USED
C31 NOT USED
U14A
U14B
U14C
U14D
74HCT04
R55 100
TXDA
RXDA
R45 4.7 K
U16
74LS374
MONITY CNTR
PLAY CNTR
MAGAZINE MTR
TRANSFER MTR
DETENT SOL
SYSTEM TX/RX\
U5E
U13D
74HCT00
U5D
U5B
2003
BOARD ERROR
D8
R32 470
R57 1 K
R6 4.7 K
C14
C13
C19
C28
C8
C8A
C30
C16
C29
C10
C34
.1 uF

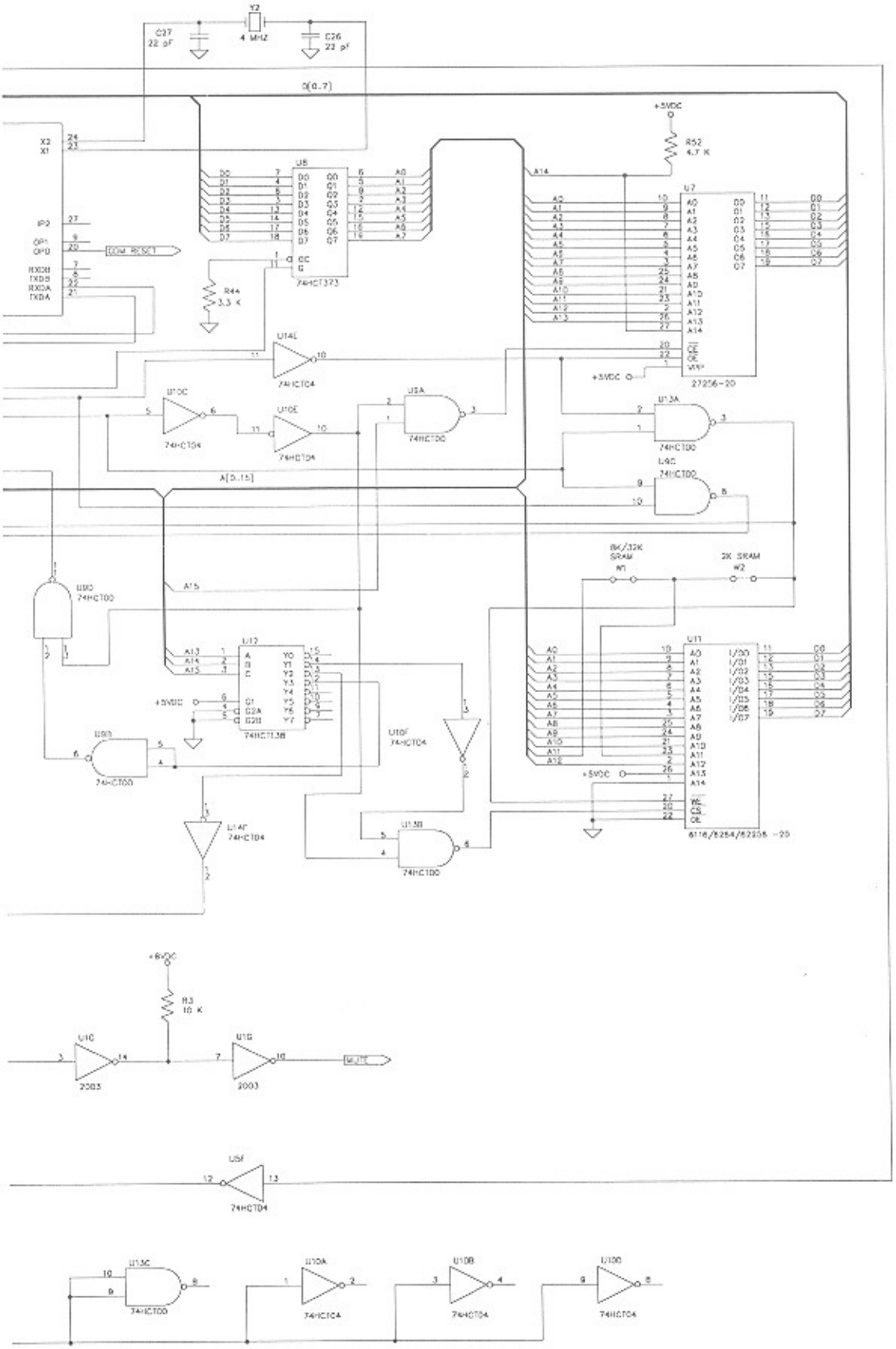

For Equivalent Engineering Drawing See 61053401-Q2 B

Figure 5-13B. Mechanism Control Assembly Schematic, Sheet 1

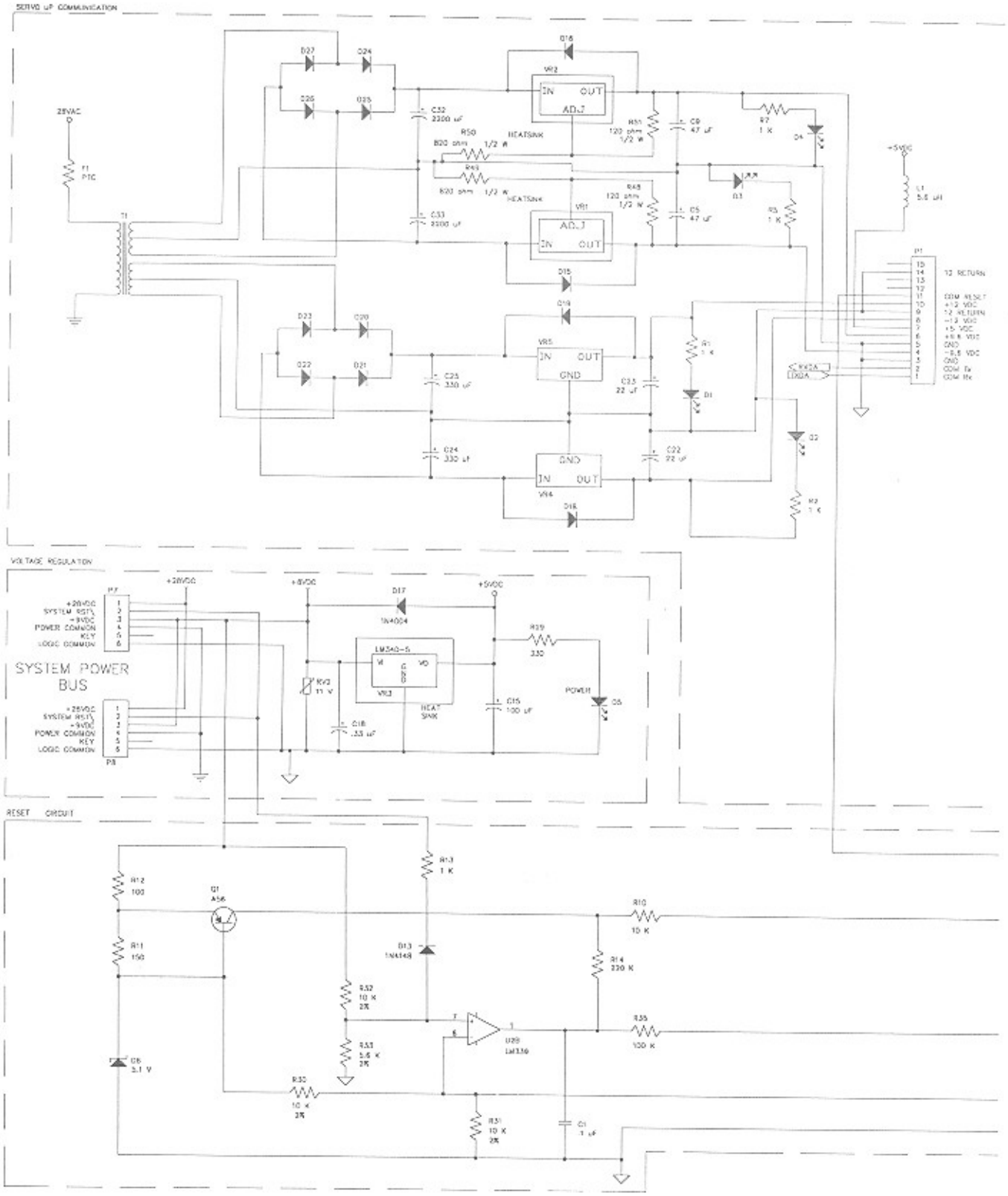
SERVO uP COMMUNICATION
28VAC
F1
PTC
T1
D27
D24
D26
D25
C32
2200 uF
R50
820 ohm
1/2 W
HEATSINK
R49
820 ohm
1/2 W
HEATSINK
C33
2200 uF
D16
VR2
IN
OUT
ADJ
R51
120 ohm
1/2 W
C9
47 uF
R7
1 K
D4
+5VDC
L1
5.6 uH
D3
R5
1 K
R48
120 ohm
1/2 W
C5
47 uF
VR1
ADJ
IN
OUT
D15
D19
D23
D20
D22
D21
VR5
IN
OUT
GND
C25
330 uF
C23
22 uF
R1
1 K
D1
C24
330 uF
GND
IN
OUT
VR4
C22
22 uF
D18
D2
R2
1 K
P1
12 RETURN
COM RESET
+12 VDC
12 RETURN
-12 VDC
+5 VDC
+5.6 VDC
GND
-5.6 VDC
GND
COM Tx
COM Rx
K4
LM324
VOLTAGE REGULATION
P7
+28VDC
SYSTEM RSTL
+9VDC
POWER COMMON
KEY
LOGIC COMMON
SYSTEM POWER
BUS
P8
+28VDC
SYSTEM RSTL
+9VDC
POWER COMMON
KEY
LOGIC COMMON
+28VDC
+9VDC
D17
1N4004
+5VDC
LM340-5
VI
VO
GND
VR3
HEAT
SINK
KV2
11 V
C18
.33 uF
R39
330
C15
100 uF
POWER
D5
RESET CIRCUIT
R12
100
Q1
A56
R11
150
D6
5.1 V
R13
1 K
D13
1N4148
R32
10 K
2%
R33
5.6 K
2%
R30
10 K
2%
R31
10 K
2%
U29
LM336
R10
10 K
R14
220 K
R35
100 K
C1
1 uF

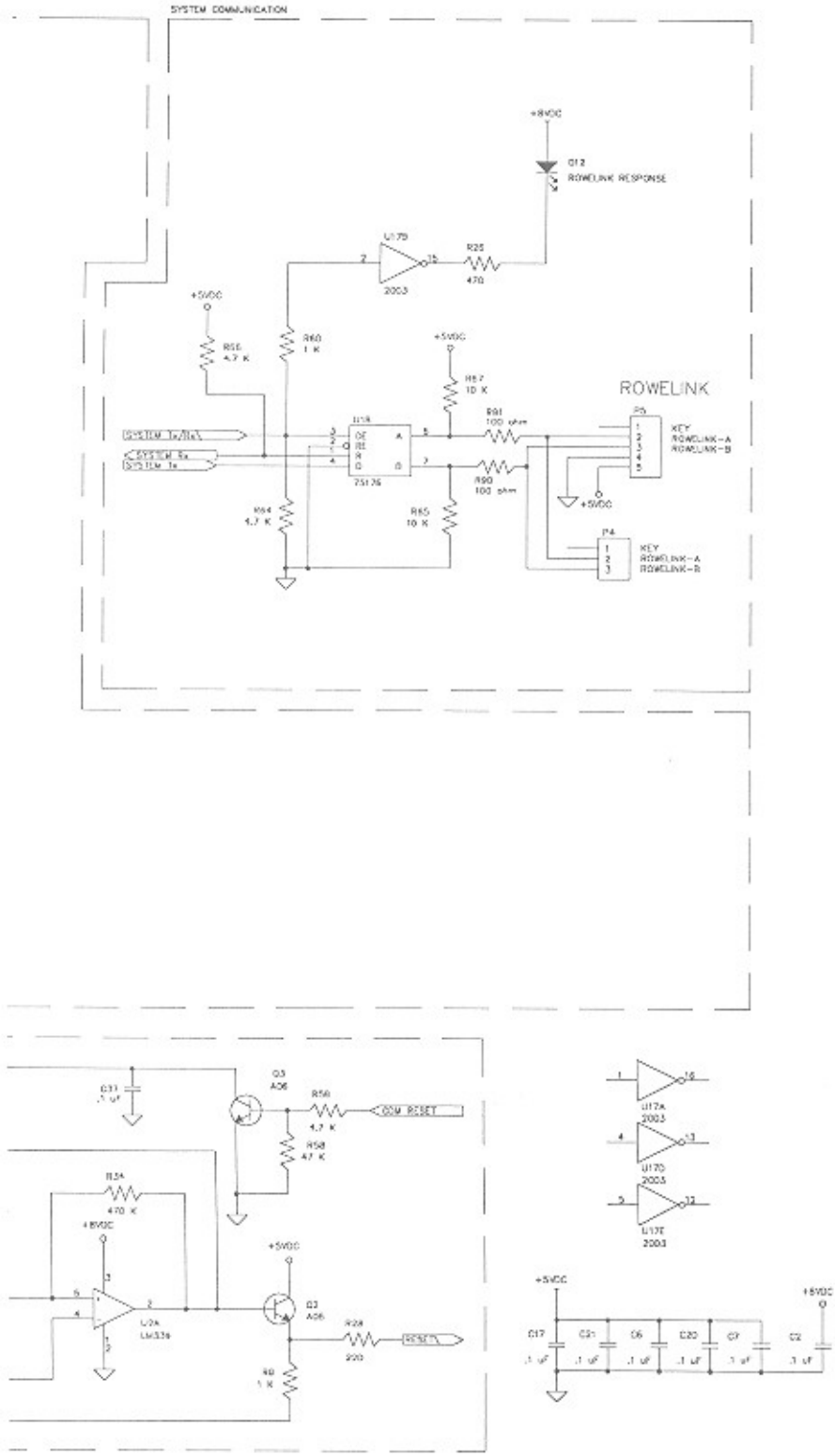

For Equivalent Engineering Drawing See 61053401-Q2 B

Figure 5-13B. Mechanism Control Assembly Schematic, Sheet 2

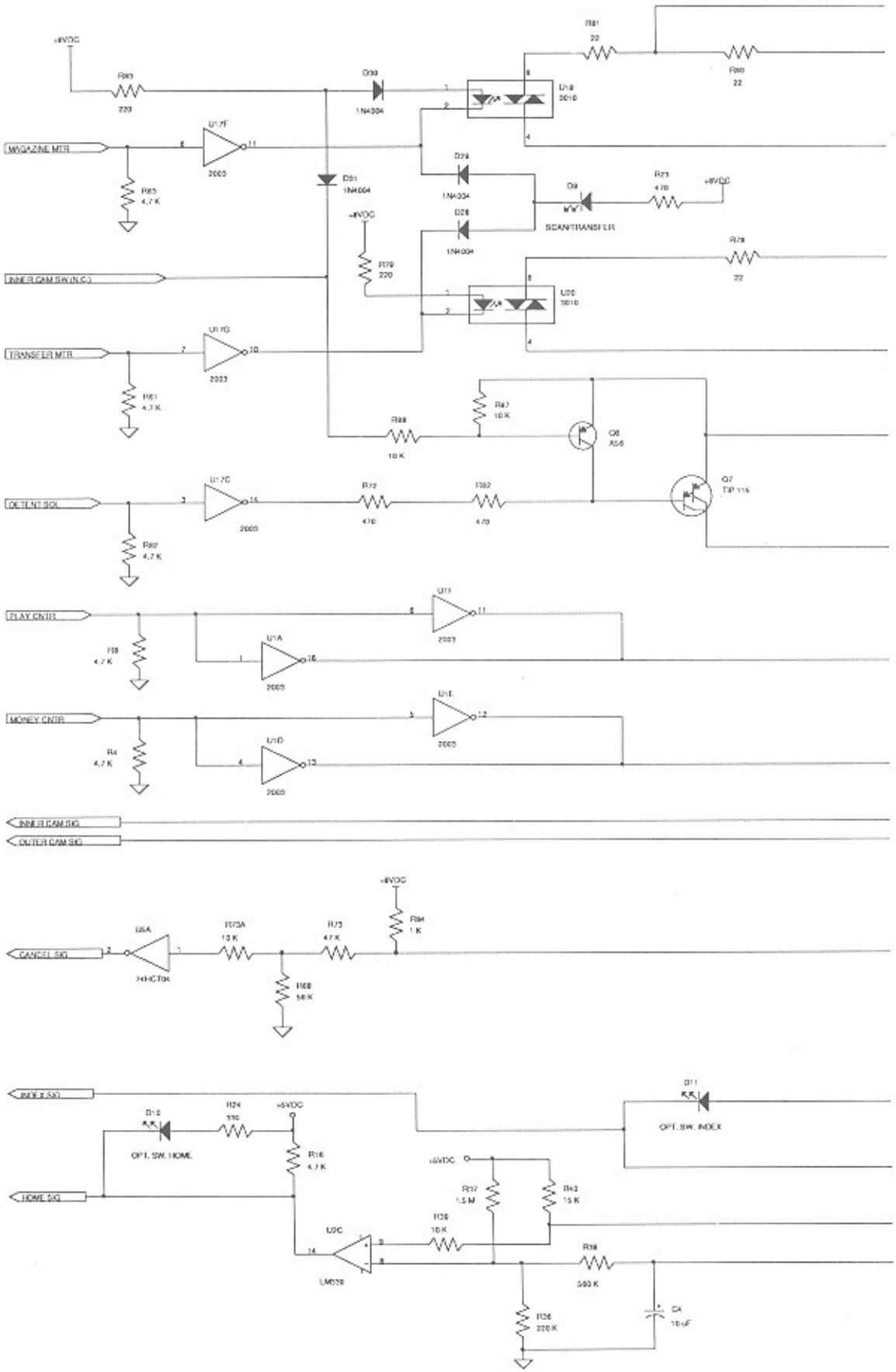
+8VDC
MAGAZINE MTR
INNER CAM SW (N.C.)
TRANSFER MTR
DETENT SOL
PLAY CNTR
MONEY CNTR
INNER CAM SIG
OUTER CAM SIG
CANCEL SIG
INDEX SIG
HOME SIG
SCAN/TRANSFER
OPT. SW. HOME
OPT. SW. INDEX
2003
74HCT04
LM339

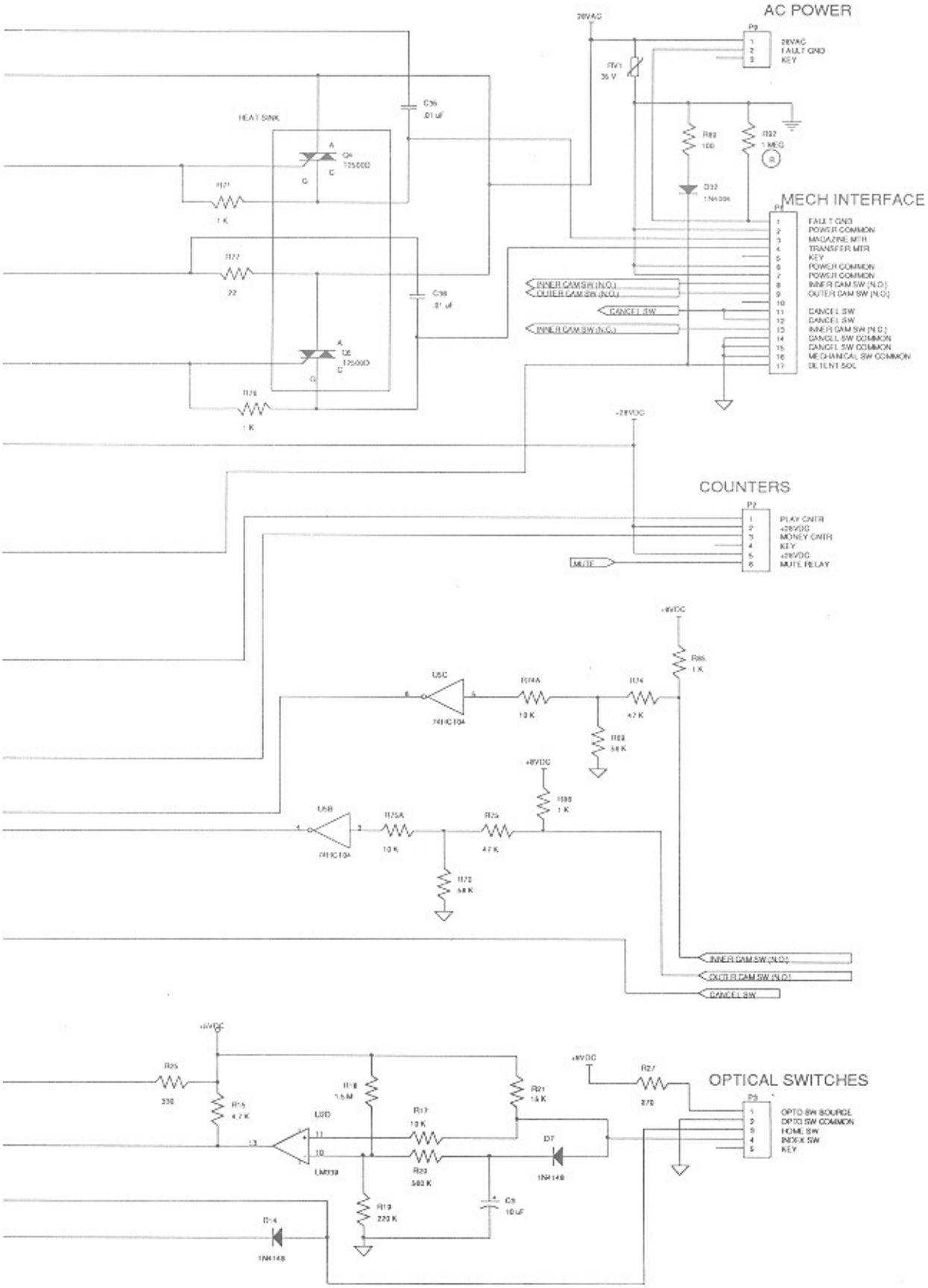

For Equivalent Engineering Drawing See 61053401-Q2 B

Figure 5-13B. Mechanism Control Assembly Schematic, Sheet 3

CD-100C Mech. Controller IC Power And Common Pin Chart

Ref.	Generic Part #	Power		Common	
		+5 VDC	+28 VDC	Logic	Power
U1	ULN2003	—	9	8	—
U2	LM3302	—	—	—	—
U3	74HCT151	16	—	8	—
U4	74HCT151	16	—	8	—
U5	74HCT04	14	—	7	—
U6	63A03R	7	—	1	—
U7	27256	28	—	14	—
U8	74HCT373	20	—	10	—
U9	74HCT00	14	—	7	—
U10	74HCT04	14	—	7	—
U11	6264	28	—	14	—
U12	74HCT138	16	—	8	—
U13	74HCT00	14	—	7	—
U14	74HCT04	14	—	7	—
U15	88C168	28	—	14	—
U16	74LS374	20	—	10	—
U17	ULN2003	—	—	8	—

For Equivalent Engineering Drawing See 61053401-Q2 B

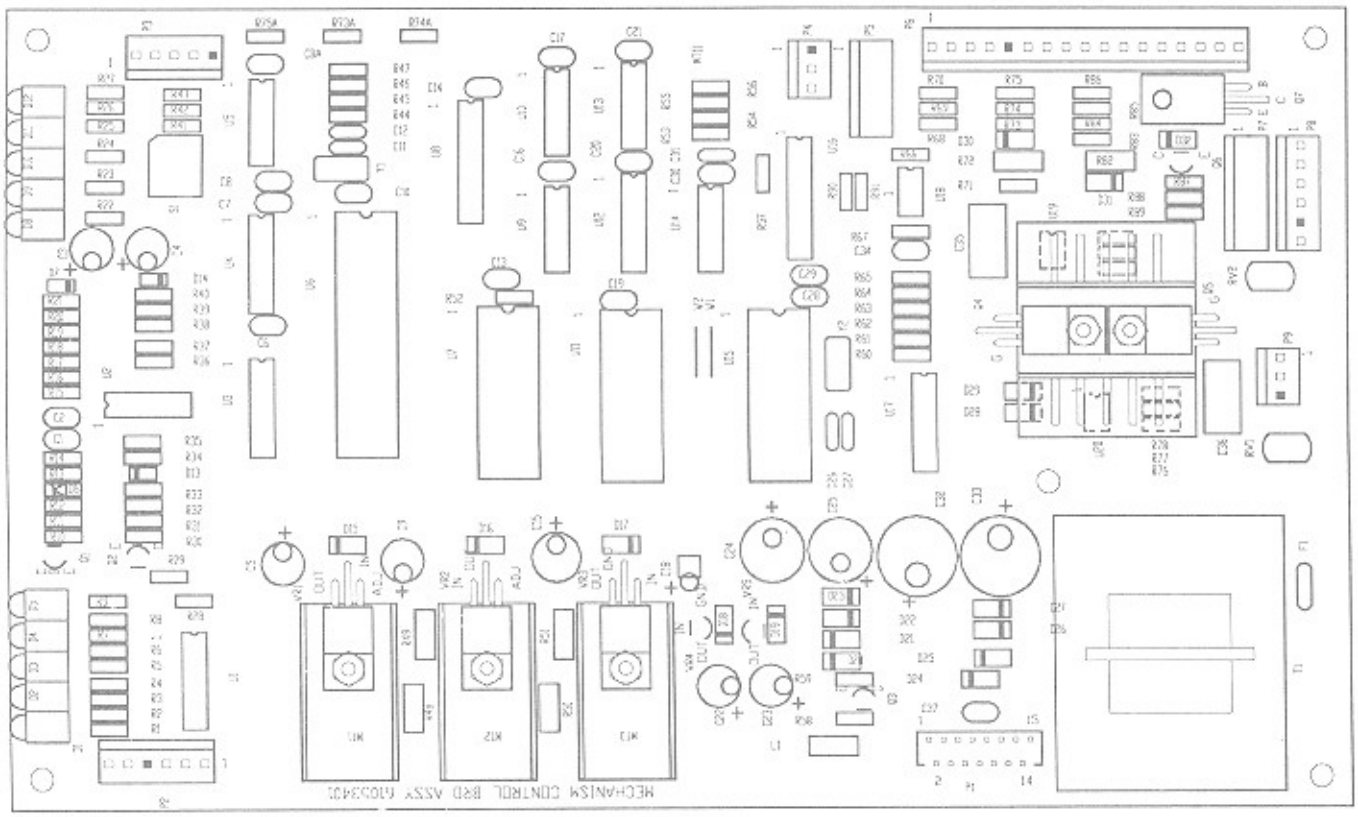

Figure 5-13C. Mechanism Control Assembly Circuit Board Layout 61053401-C

COMPONENT LIST FOR MECHANISM CONTROL BOARD (61053401-C)

C1	Capacitor - Monolythic Ceramic	.1 µf	70028511
C2	Capacitor - Monolythic Ceramic	.1 µf	70028511
C3	Capacitor - Electrolytic 50 VDC 20%	10 µf	70028105
C4	Capacitor - Electrolytic 50 VDC 20%	10 µf	70028105
C5	Capacitor - Electrolytic 35 VDC 20%	47 µf	70028109
C6	Capacitor - Monolythic Ceramic	.1 µf	70028511
C7	Capacitor - Monolythic Ceramic	.1 µf	70028511
C8	Capacitor - Monolythic Ceramic	.1 µf	70028511
C8A	Capacitor - Monolythic Ceramic	.1 µf	70028511
C9	Capacitor - Electrolytic 35 VDC 20%	47 µf	70028109
C10	Capacitor - Monolythic Ceramic	.1 µf	70028511
C11	Capacitor - Monolythic Ceramic 10%	22 pf	70028705
C12	Capacitor - Monolythic Ceramic 10%	22 pf	70028705
C13	Capacitor - Monolythic Ceramic	.1 µf	70028511
C14	Capacitor - Monolythic Ceramic	.1 µf	70028511
C15	Capacitor - Electrolytic 16 VDC 20%	100 µf	70028111
C16	Capacitor - Monolythic Ceramic	.1 µf	70028511
C17	Capacitor - Monolythic Ceramic	.1 µf	70028511
C18	Capacitor - Tantalum 35 VDC 20%	.33 µf	70025119
C19	Capacitor - Monolythic Ceramic	.1 µf	70028511
C20	Capacitor - Monolythic Ceramic	.1 µf	70028511
C21	Capacitor - Monolythic Ceramic	.1 µf	70028511
C22	Capacitor - Electrolytic 50 VDC 20%	22 µf	70028107
C23	Capacitor - Electrolytic 50 VDC 20%	22 µf	70028107
C24	Capacitor - Electrolytic 35 VDC 20%	330 µf	70028114
C25	Capacitor - Electrolytic 35 VDC 20%	330 µf	70028114
C26	Capacitor - Monolythic Ceramic 10%	22 pf	70028705
C27	Capacitor - Monolythic Ceramic 10%	22 pf	70028705
C28	Capacitor - Monolythic Ceramic	.1 µf	70028511
C29	Capacitor - Monolythic Ceramic	.1 µf	70028511
C30	Capacitor - Monolythic Ceramic	.1 µf	70028511
C31	NOT USED		
C32	Capacitor - Electrolytic 35 VDC 20%	2200 µf	70028116
C33	Capacitor - Electrolytic 35 VDC 20%	2200 µf	70028116
C34	Capacitor - Monolythic Ceramic	.1 µf	70028511
C35	Capacitor - Film 400 VDC 20%	.01 µf	70024013
C36	Capacitor - Film 400 VDC 20%	.01 µf	70024013
C37	Capacitor - Monolythic Ceramic	.1 µf	70028511
D1	Diode - Light Emitting Red Diffused		70035201
D2	Diode - Light Emitting Red Diffused		70035201
D3	Diode - Light Emitting Red Diffused		70035201
D4	Diode - Light Emitting Red Diffused		70035201
D5	Diode - Light Emitting 90 Degree		70035201
D6	Diode - Zener 5.1V (½w, 5%)	1N5231B	70035526
D7	Diode - Silicon	1N4148	70035007
D8	Diode - Light Emitting 90 Degree		70035201
D9	Diode - Light Emitting 90 Degree		70035201
D10	Diode - Light Emitting 90 Degree		70035201
D11	Diode - Light Emitting 90 Degree		70035201
D12	Diode - Light Emitting 90 Degree		70035201
D13	Diode - Silicon	1N4148	70035007
D14	Diode - Silicon	1N4148	70035007
D15	Diode - Silicon	1N4004	70035005

D16	Diode - Silicon	1N4004	70035005
D17	Diode - Silicon	1N4004	70035005
D18	Diode - Silicon	1N4004	70035005
D19	Diode - Silicon	1N4004	70035005
D20	Diode - Silicon	1N4004	70035005
D21	Diode - Silicon	1N4004	70035005
D22	Diode - Silicon	1N4004	70035005
D23	Diode - Silicon	1N4004	70035005
D24	Diode - Silicon	1N4004	70035005
D25	Diode - Silicon	1N4004	70035005
D26	Diode - Silicon	1N4004	70035005
D27	Diode - Silicon	1N4004	70035005
D28	Diode - Silicon	1N4004	70035005
D29	Diode - Silicon	1N4004	70035005
D30	Diode - Silicon	1N4004	70035005
D31	Diode - Silicon	1N4004	70035005
D32	Diode - Silicon	1N4004	70035005
F1	Resistor - PTC		70072501
L1	Inductor - RF	5.6 µH	70041503
P1	Connector - Ribbon Cable 1.5 mm		21640901
P2	Header - Polarized .156 6 Position		70075006
P3	Header - Polarized .156 5 Position		70075005
P4	Header - Polarized .156 3 Position		70075003
P5	NOT USED		
P6	Header - Polarized .156 17 Position		70075017
P7	NOT USED		
P8	Header - Polarized .156 6 Position		70075006
P9	Header - Polarized .156 3 Position		70075003
Q1	Transistor - Silicon PNP	MPSA56	70030104
Q2	Transistor - Silicon NPN	MPSA06	70030008
Q3	Transistor - Silicon NPN	MPSA06	70030008
Q4	Thyristor Triac	T2500D	70038102
Q5	Thyristor Triac	T2500D	70038102
Q6	Transistor - Silicon PNP	MPSA56	70030104
Q7	Transistor - Silicon Darlington	TIP115	70030805

Note: All resistors are ¼ watt 5%, unless otherwise noted.

R1	Resistor	1 K	79901102
R2	Resistor	1 K	79901102
R3	Resistor	10 K	79901103
R4	Resistor	4.7 K	79901472
R5	Resistor	1 K	79901102
R6	Resistor	4.7 K	79901472
R7	Resistor	1 K	79901102
R8	Resistor	4.7 K	79901472
R9	Resistor	1 K	79901102
R10	Resistor	10 K	79901103

R11	Resistor	150 Ω	79901151
R12	Resistor	100 Ω	79901101
R13	Resistor	1 K	79901102
R14	Resistor	220 K	79901224
R15	Resistor	4.7 K	79901472
R16	Resistor	4.7 K	79901472
R17	Resistor	10 K	79901103
R18	Resistor	1.5 M	79901155
R19	Resistor	220 K	79901224
R20	Resistor	560 K	79901564
R21	Resistor	15 K	79901153
R22	Resistor	470 Ω	79901471
R23	Resistor	470 Ω	79901471
R24	Resistor	330 Ω	79901331
R25	Resistor	330 Ω	79901331
R26	Resistor	470 Ω	79901471
R27	Resistor	270 Ω	79901271
R28	Resistor	220 Ω	79901221
R29	Resistor	330 Ω	79901331
R30	Resistor - Carbon Film	10 K (¼w, 2%)	79902103
R31	Resistor - Carbon Film	10 K (¼w, 2%)	79902103
R32	Resistor - Carbon Film	10 K (¼w, 2%)	79902103
R33	Resistor - Carbon Film	5.6 K (¼w, 2%)	79902562
R34	Resistor	470 K	79901474
R35	Resistor	100 K	79901104
R36	Resistor	220 K	79901224
R37	Resistor	1.5 M	79901155
R38	Resistor	560 K	79901564
R39	Resistor	10 K	79901103
R40	Resistor	15 K	79901153
R41	Resistor	10 K	79901103
R42	Resistor	10 K	79901103
R43	Resistor	10 K	79901103
R44	Resistor	3.3 K	79901332
R45	Resistor	4.7 K	79901472
R46	Resistor	3.3 K	79901332
R47	Resistor	3.3 K	79901332
R48	Resistor - Metal Film	120 Ω (½w, 5%)	79904121
R49	Resistor - Metal Film	820 Ω (½w, 5%)	79904821
R50	Resistor - Metal Film	820 Ω (½w, 5%)	79904821
R51	Resistor - Metal Film	120 Ω (½w, 5%)	79904121
R52	Resistor	4.7 K	79901472
R53	Resistor	470 K	79901474
R54	NOT USED		
R55	Resistor	100 Ω	79901101
R56	Resistor	10 K	79901103
R57	Resistor	1 K	79901102
R58	Resistor	47 K	79901473
R59	Resistor	4.7 K	79901472
R60	Resistor	1 K	79901102
R61	Resistor	4.7 K	79901472
R62	Resistor	4.7 K	79901472
R63	Resistor	4.7 K	79901472
R64	Resistor	4.7 K	79901472
R65	Resistor	10 K	79901103

R66	Resistor	4.7 K		79901472
R67	Resistor	10 K		79901103
R68	Resistor	56 K		79901563
R69	Resistor	56 K		79901563
R70	Resistor	56 K		79901563
R71	Resistor	1 K		79901102
R72	Resistor - Metal Film	470 Ω (½w, 5%)		79904471
R73	Resistor	47 K		79901473
R73A	Resistor	10 K		79901103
R74	Resistor	47 K		79901473
R74A	Resistor	10 K		79901103
R75	Resistor	47 K		79901473
R75A	Resistor	10 K		79901103
R76	Resistor	1 K		79901102
R77	Resistor	22 Ω		79901220
R78	Resistor	22 Ω		79901220
R79	Resistor	220 Ω		79901221
R80	Resistor	22 Ω		79901220
R81	Resistor	22 Ω		79901220
R82	Resistor - Metal Film	470 Ω (½w, 5%)		79904471
R83	Resistor	220 Ω		79901221
R84	Resistor	1 K		79901102
R85	Resistor	1 K		79901102
R86	Resistor	1 K		79901102
R87	Resistor	10 K		79901103
R88	Resistor	10 K		79901103
R89	Resistor	100 Ω		79901101
R90	Resistor	100 Ω		79901101
R91	Resistor	100 Ω		79901101
RV1	Metal Oxide Varistor 45 VDC			70037506
RV2	Metal Oxide Varistor 14 VDC			70037505
S1	NOT USED			
T1	Transformer			40827201
U1	I.C. - Darlington Array		(ULN2003)	70036901
U2	I.C. - Quad Comparator		(LM3302)	70036801
U3	I.C. - 1 Of 8 Multiplexer		(74HCT151)	79930151
U4	I.C. - 1 Of 8 Multiplexer		(74HCT151)	79930151
U5	I.C. - Hex Inverter		(74HCT04)	79930004
U6	I.C. - Microprocessor		(63A03R)	70039125
			(6803P-1)	70039128
U7	I.C. - 32K X 8 EPROM (CD100 MECH V3.0)		(27256)	70038322
U8	I.C. - Octal Transparent Latch		(74HCT373)	79930373
U9	I.C. - Quad 2 Input NAND Gate		(74HCT00)	79930000
U10	I.C. - Hex Inverter		(74HCT04)	79930004
U11	I.C. - 8K X 8 CMOS RAM			70036604
U12	I.C. - 1 Of 8 Decoder		(74HCT138)	79930138
U13	I.C. - Quad 2 Input NAND Gate		(74HCT00)	79930000
U14	I.C. - Hex Inverter		(74HCT04)	79930004
U15	I.C. - Dual USART		(88C168)	30800255
U16	I.C. - Octal Edge-triggered Flip Flop		(74LS374)	70037111
U17	I.C. - Darlington Array		(ULN2003)	70036901

COMPONENT LIST FOR MECHANISM CONTROL BOARD

U18	I.C. - Transceiver RS-485	(75176)	70037801
U19	Photocoupler Opto-triac	(3010)	70033703
U20	Photocoupler Opto-triac	(3010)	70033703
VR1	I.C. - Voltage Regulator Adjustable	(LM337T)	70036508
VR2	I.C. - Voltage Regulator Adjustable	(LM317T)	70036507
VR3	I.C. - Voltage Regulator + 5V	(LM340T5)	70036505
VR4	I.C. - Voltage Regulator -12V	(LM79L12)	70036517
VR5	I.C. - Voltage Regulator +12V	(LM78L12)	70036516
W1	Wire - Bare		00503200
W2	NOT USED		
Y1	Crystal - Quartz 4.9152 MHz		25167313
Y2	Crystal - Quartz 4.000 MHz		25167306

This page intentionally left blank.

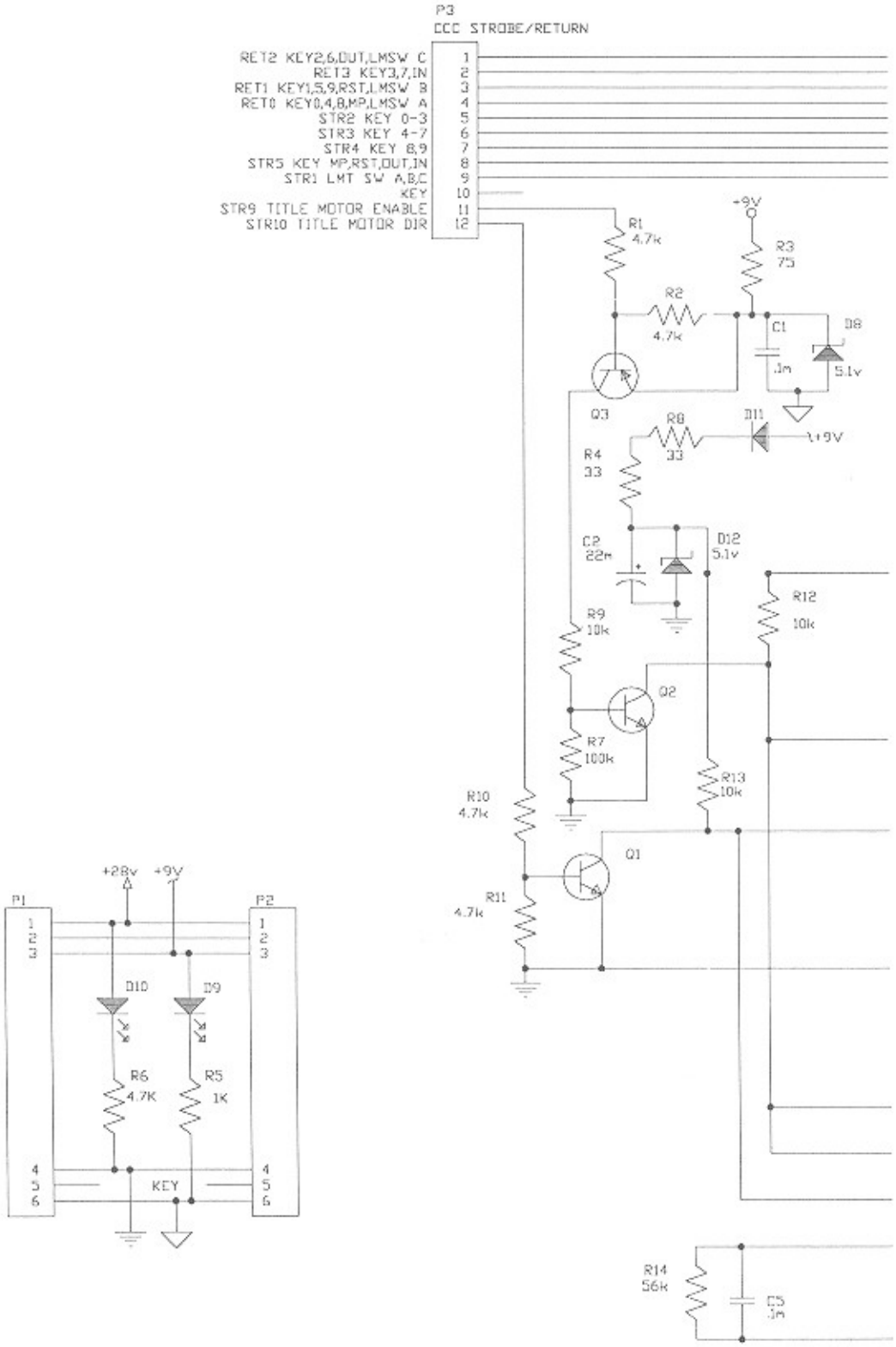
P3
CCC STROBE/RETURN
RET2 KEY2,6,OUT,LMSW C
RET3 KEY3,7,IN
RET1 KEY1,5,9,RST,LMSW B
RET0 KEY0,4,8,MP,LMSW A
STR2 KEY 0-3
STR3 KEY 4-7
STR4 KEY 8,9
STR5 KEY MP,RST,OUT,IN
STR1 LMT SW A,B,C
KEY
STR9 TITLE MOTOR ENABLE
STR10 TITLE MOTOR DIR
R1 4.7k
R2 4.7k
R3 75
C1 .1m
D8 5.1v
+9V
Q3
R8 33
D11
R4 33
C2 22m
D12 5.1v
R12 10k
R9 10k
Q2
R7 100k
R13 10k
R10 4.7k
Q1
R11 4.7k
+28v
P1
P2
D10
D9
R6 4.7K
R5 1K
KEY
R14 56k
C5 .1m

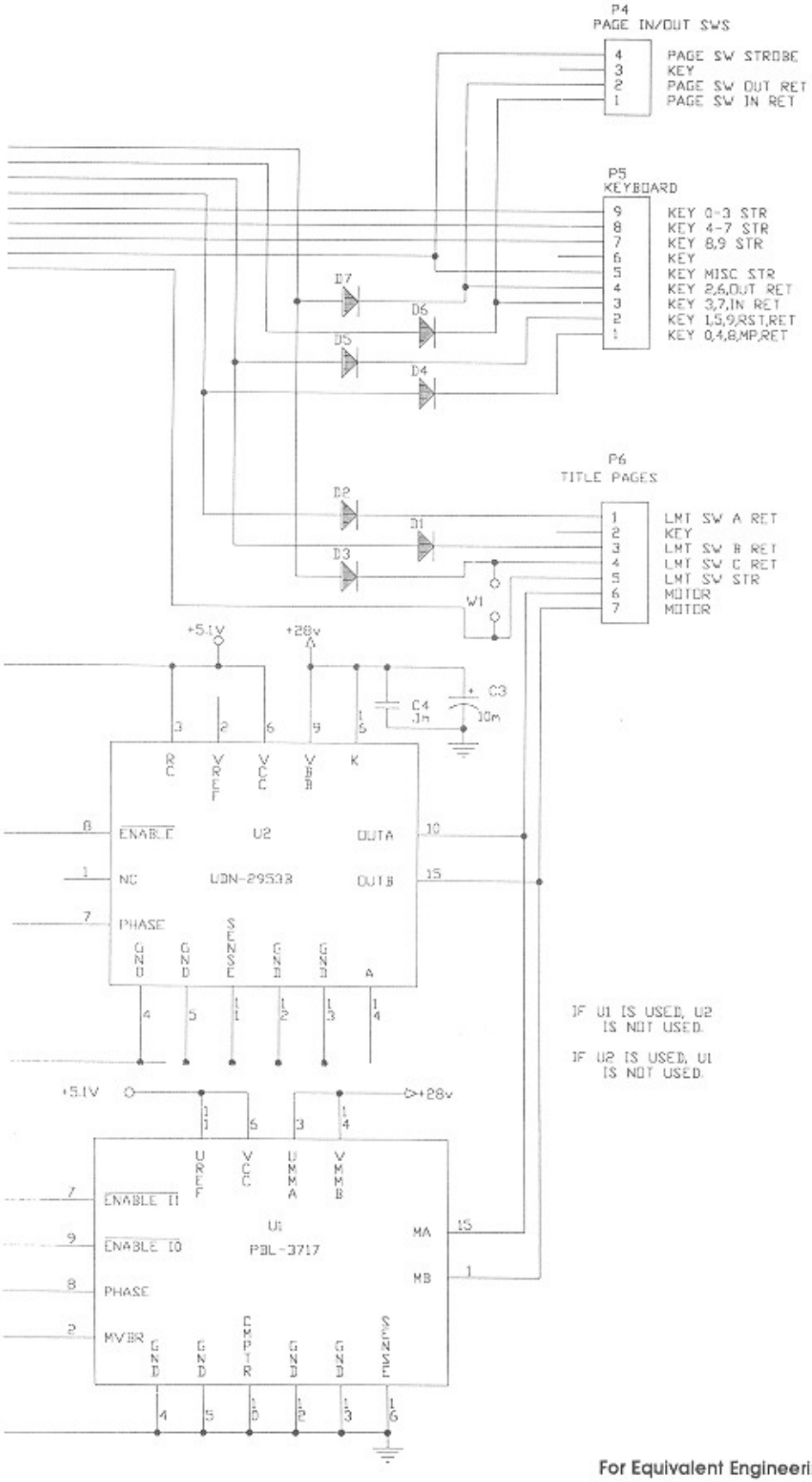

For Equivalent Engineering Drawing See 40853001-Q2 A

Figure 5-14A. Title Rack Interface Schematic

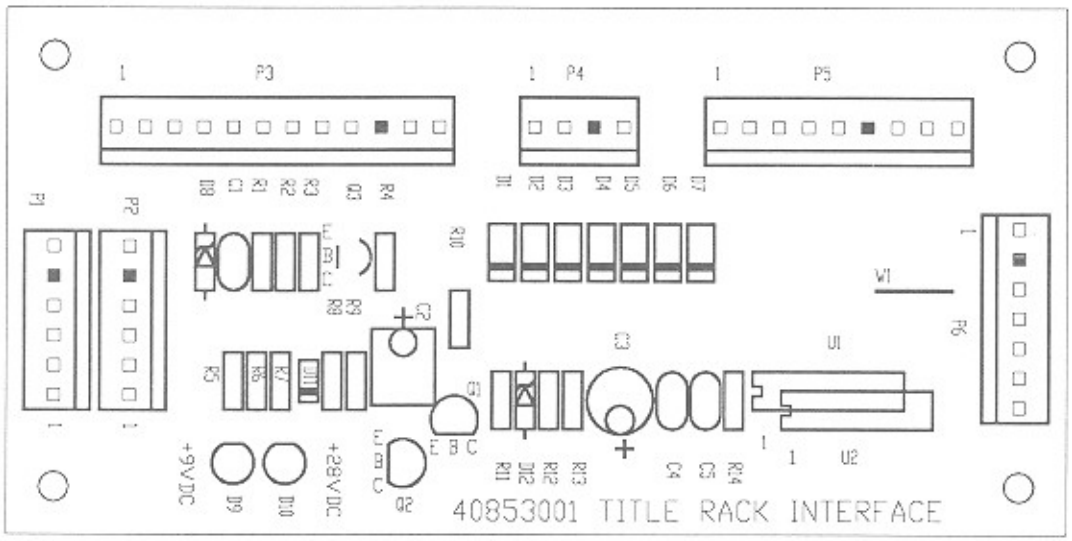

Figure 5-14B. Title Rack Interface Circuit Board Layout 40853001 - A

COMPONENT LIST FOR TITLE RACK INTERFACE BOARD (40853001-A)

C1	CAPACITOR - MONOLYTHIC CERAMIC	.1 UF	70028511	
C2	CAPACITOR - TANTALUM 15 VDC 10%	22 UF	70025104	
C3	CAPACITOR - ELECTROLYTIC 50 VDC 20%	10 UF	70023808	
C4	CAPACITOR - MONOLYTHIC CERAMIC	.1 UF	70028511	
C5	CAPACITOR - MONOLYTHIC CERAMIC	.1 UF	70028511	
D1	DIODE - SILICON	1N4004	70035005	
D2	DIODE - SILICON	1N4004	70035005	
D3	DIODE - SILICON	1N4004	70035005	
D4	DIODE - SILICON	1N4004	70035005	
D5	DIODE - SILICON	1N4004	70035005	
D6	DIODE - SILICON	1N4004	70035005	
D7	DIODE - SILICON	1N4004	70035005	
D8	DIODE - ZENER 5.1V 1/2W 5%	1N5231B	70035526	
D9	DIODE - LIGHT EMITTING RED DIFFUSED		70035305	
D10	DIODE - LIGHT EMITTING RED DIFFUSED		70035305	
D11	DIODE - SILICON	1N4148	70035012	
D12	DIODE - ZENER 5.1V 1/2W 5%	1N5231B	70035526	
P1	HEADER - POLARIZED .156 6 POSITION		70075006	
P2	HEADER - POLARIZED .156 6 POSITION		70075006	
P3	HEADER - POLARIZED .156 12 POSITION		70075012	
P4	HEADER - POLARIZED .156 4 POSITION		70075004	
P5	HEADER - POLARIZED .156 9 POSITION		70075009	
P6	HEADER - POLARIZED .156 7 POSITION		70075007	
Q1	TRANSISTOR - SILICON NPN	MPSA06	70030008	
Q2	TRANSISTOR - SILICON NPN	MPSA06	70030008	
Q3	TRANSISTOR - SILICON PNP	MPSA56	70030104	
R1	RESISTOR - CARBON FILM 1/4W 5%	4.7 K	79901472	
R2	RESISTOR - CARBON FILM 1/4W 5%	4.7 K	79901472	
R3	RESISTOR - CARBON FILM 1/4W 5%	75 OHM	79901750	
R4	RESISTOR - CARBON FILM 1/4W 5%	33 OHM	79901330	
R5	RESISTOR - CARBON FILM 1/4W 5%	1 K	79901102	
R6	RESISTOR - CARBON FILM 1/4W 5%	4.7 K	79901472	
R7	RESISTOR - CARBON FILM 1/4W 5%	100 K	79901104	
R8	RESISTOR - CARBON FILM 1/4W 5%	33 OHM	79901330	
R9	RESISTOR - CARBON FILM 1/4W 5%	10 K	79901103	
R10	RESISTOR - CARBON FILM 1/4W 5%	4.7 K	79901472	
R11	RESISTOR - CARBON FILM 1/4W 5%	4.7 K	79901472	
R12	RESISTOR - CARBON FILM 1/4W 5%	10 K	79901103	
R13	RESISTOR - CARBON FILM 1/4W 5%	10 K	79901103	
R14	RESISTOR - CARBON FILM 1/4W 5%	56 K	79901563	
U1	I.C. - MOTOR DRIVER	CS3717A	30800241	SEE NOTE
U2	I.C. - MOTOR DRIVER	UDN-2953B	30800229	SEE NOTE
W1	NOT USED			

NOTE: IF U1 IS USED, U2 IS NOT USED
IF U2 IS USED, U1 IS NOT USED

This page intentionally left blank.