SECTION 4- TROUBLESHOOTING

INTRODUCTION

The phonograph incorporates several modules which plug in for rapid service. The block diagram (page 66) shows the modules and the wiring between them. It also shows wiring between modules and components (switches, motors, coils).

The most likely cause of phonograph problems are:

1. Continuous or intermittent opens in harness. The cause can be; the wiring, the terminal, or a bad wire to terminal crimp.

2. A defective module. A list is shown below.

It is important to troubleshoot logically so that effort is not wasted in removing and replacing the wrong parts. Most failures are caused by minor defects, such as loose connections or dirty contacts. Check the following before replacing any parts.

1. Check that all plugs are firmly seated.

2. Check that connector pins are not bent, broken or pushed through the back of the connector when mated.

3. Check that wires are not broken at connector pins.

CONTINUOUS FREE PLAY

In some cases, continuous free play operation is desirable. Set the phonograph to "free play" by positioning the "Test-Norm" switch, on the central control computer, to test. This gives continuous credit and selections may be made.

If automatic continuous music is desired set the playmaker switch on the central control computer to "continuous". This will keep the location in Music until repairs can be made.

PART NO.	DESCRIPTION	NOTES
6-08870-04	Central Control Computer (C.C.C.)	Module contains Circuit Board Ass'y - C.C.C. 6-08871-03
4-07221-02	Mechanism Control	Module contains Circuit Board Ass'y - Mech Control 6-08708-02
4-07706-01	Power Supply	
6-08878-04	Pricing Board	
4-07363-01	Digital Display	

TROUBLESHOOTING CHARTS

One of the best ways to isolate a problem is to determine the exact state of the phonograph when the failure occurs. This means recording the condition of digital display, status LED's, gripper bow, detent pawl, magazine, cam switches, etc.

This information can help you identify the cause of intermittent or continuous failures.
The chart has three columns.
The trouble column lists different types of failures.
The symptom column shows the state of the phonograph when the failure occurs.
The last column shows the probable cause.

TROUBLE	SYMPTOM	PROBABLE CAUSE
Phonograph fails to operate when power is turned on	LEDs on power supply and fluorescent lights fail to light.	1. Rear power switch off. 2. Plug not in wall 3. Wall circuit is dead 4. 10 amp circuit breaker tripped 5. Wiring to rear power switch 6. Rear power switch.
	LEDs on power supply fail to light but fluorescent lamps lit	1. 2 amp circuit breaker tripped. 2. Power Supply 3. 28 VAC overload from bill acceptor or mag., transfer, or T.T. motor
	"+8 VDC" LED on power supply fails to light but lights when phono harness at power supply is unplugged	1. Central Control Computer 2. Mech control 3. Wallbox interface 4. Bill Acceptor 5. On/Service/Off switch 6. Wiring NOTE: To locate problem reconnect phono harness and unplug connectors in order below. If +8 VDC LED lights replace last unit unplugged. 1. Wallbox Interface (J103) 2. Central Control Computer (J105) 3. Mech Control Harness (J205) 4. Mech Control (J206) 5. Bill Acceptor
	"+28 VDC" LED on Power Supply fails to light but lights when Phono Harness at Power Supply is unplugged	1. Mech Control Board 2. Bill Acceptor 3. Detent Coil 4. Wiring

TROUBLE	SYMPTOM	PROBABLE CAUSE
Magazine does not rotate when power is turned On or a Selection is made	"Mag. Motor" and "Detent" LED's ON, detent is actuated	1. Wiring to Magazine Motor 2 Magazine Motor 3. Mech. Control Board
	"Mag. Motor" and "Detent" LED's ON, Detent not actuated	1. Wiring to Detent Coil 2. Detent Coil 3. Mech. Control Board
	"Mag. Motor" LED OFF or "Detent" LED OFF	1. Wiring from Central Control Computer to Mech Control Board 2. Central Control Computer 3. Mech. Control Board
Makes wrong selections	OPT SW Index or OPT Sw. Home operating intermittantly	1. Readjust Sprag Assembly (See Page 18) 2. Readjust Optical Switch (See Page 20) 3. Check Detent Coil Adjustment (Page 18)
Magazine Rotates Continuously	"Mag Motor" LED OFF	1. Wiring to Magazine Motor 2. Mech. Control Board
	"Mag. Motor" LED ON. and "Opt. Sw. Index" LED not flashing, and/or "Opt. Sw. Home" LED does not flash at record number 99.	1. Optical Switch 2. Wiring to Optical Switch 3. Mech. Control Board 4. Optical Switch or Home Position Blocked
	"Mag. Motor" LED on and both Optical Sw. LED's Normal	1. Wiring from Central Control Computer to Mech Control Board
Record does not Transfer	"Tran. Motor" LED is ON	1. Wiring to Transfer Motor 2. Mech. Control Board 3. Transfer Motor
	"Tran. Motor" LED is OFF	1. Wiring from Central Control Computer to Mech Control Board 2. Central Control Computer 3. Mech. Control Board
	"Tran. Motor" LED comes ON and transfer starts but LED and Motor turn off when cam leaves inner cam Switch	1. Outer cam Switch 2. Central Control Computer 3. Mech. Control Board
Transfer Starts when Power is applied and runs continuously	"Tran. Motor" LED is OFF	1. Mech. Control Board 2. Wiring to Motor
	"Tran. Motor" LED is ON	1. Central Control Computer 2. Mech Control Board 3. Wiring from Central Control Computer to Mech Control
Transfer starts and runs continuously	"Tran. Motor" LED comes ON when Motor starts and stays ON	1. Wiring to Outer cam Sw. 2. Out cam Switch 3. Central Control Computer 4. Wiring from Central Control Computer to Mech Control 5. Mech Control Board

TROUBLE	SYMPTOM	PROBABLE CAUSE
Turntable motor does not run	"T.T. Motor" LED is ON	1. Wiring to T.T. Motor 2. T.T. Motor 3. Mech Control
	"T.T. Motor LED is OFF	1. Wiring from Central Control Computer to Mech Control Board. 2. Central Control Computer 3. Mech. Control Board
Record will not Cancel when Finished Playing	"Cancel" LED is ON	1. Wiring from Mech Control to Central Control Computer 2. Central Control Computer 3. Also see "Record Does not Transfer"
	"Cancel" LED is OFF	1. Wiring to Cancel Switch 2. Cancel Switch 3. Mech. Control Board
Mech will not cancel with no record on T.T.	Cancel LED is off	1. Mute Plug to Amp is unplugged 2. AC Receptacle to Amp is unplugged
Record Cancels without Playing	"Cancel" LED stays ON	1. Short in Cancel Switch Wiring 2. Cancel Switch 3. Mech Control Board
	"Cancel" LED flashes ON as Record sets down	1. Auto Cancel Misadjusted
	"Cancel" LED does not flash	1. Wiring to outer cam Switch 2. Outer cam Switch 3. Wiring from Mech Control to Central Control Computer 4. Mech Control Board 5. Central Control Computer
Left Side of Record Plays when Right Side Selected	"Toggle" LED is ON	1. Wiring to Toggle Coil(s) 2. Toggle Coil(s) 3. Mech. Control
	"Toggle" LED is OFF	1. Wiring from Central Control Computer to Mech Control Board 2. Central Control Computer 3. Mech. Control Board
Money Counter or Play Counter Fails to Count	Fails to Count	1. Wiring to Counter 2. Counter 3. Mech Control Board 4. Wiring from Central Control Computer to Mech Control 5. Central Control Computer
Automix does not Work	Turntable Motor runs, Hub does pop up, but speed changes for 33 RPM Records	1. Hub Shift Wiring 2. Automix Switch 3. Hub Shift Coil
	Turntable Motor Runs, Hub pops up, but speed does not shift for 33 RPM Records	1. Speed Shift Wiring 2. Automix Switch 3. Speed Shift Coil
	Hub does not pop up and speed will not change	1. Wiring 2. Automix Switch 3. Mech. Control Board

TROUBLE	SYMPTOM	PROBABLE CAUSE
Phonograph is always in Service ("Memorec")Mode of Operation	Record Number / Times selected Display is always lit	1. On/Service/Off Switch 2. "+8 on Signal" Wiring 3. Central Control Computer
Phonograph will not go into Service Mode of Operation	Record Number/ Times selected Display will not light when ON/ /Service/Off Switch is in Service Position	1. Central Control Computer 2. "+8 On Signal" Wiring 3. On/Service/Off Switch
No Credit	No Credit given by Coins and Dollar Bill	1. Central Control Computer
	No Credit given by Coins but Dollar Bill gives Credit	1. Coin Switch common wiring 2. Central Control Computer
	One value of Coin will not give Credit	1. Coin Rejected 2. Wiring to Coin Switch 3. Coin Switch 4. Central Control Computer
	Dollar Bill will not give Credit	1. Bill Acceptor 2. Wiring to Bill Acceptor 3. Central Control Computer
Wrong Credit	Credit for amount deposited does not agree with Price Card setting	1. One or more Coins did not register (See No Credit) 2. Pricing Chips 3. Pricing Board 4. Wiring from Pricing Board to Central Control Computer 5. Central Control Computer 6. Coin Switch Wiring incorrect (See Page 25)
System does not respond to Key board	"Make Selection" LED not lit	1. Insufficient Credit
	"Make Selection" LED lit but entire Keyboard does not work	1. Shorted "Reset" Key 2. Central Control Computer 3. Short in "Reset" Key Wiring
	"Make Selection" LED lit but certain Keys do not work	1. Wiring from Central Control Computer to Pricing Board 2. Keyboard 3. Central Control Computer 4. Pricing Board
Digital Display does not work	Display Lights but shows Wrong Information	1. Central Control Computer
	"+8 VDC" LED on Central Control Computer is lit but Display Digits and LED lamp will not light	1. Central Control Computer
	Certain LED Lamps and/or Digits will not work	1. Wiring from Central Control Computer to Digital Display 2. Digital Display 3. Central Control Computer

SEQUENCE OF OPERATION

The sequence of operation diagrams which follow illustrate the phonograph operational cycle.

The first diagram shows voltage and common connections to the electronic circuit modules and the electrical components located on the mechanism.

The remaining diagrams illustrate which signals are active during each point in the phonograph operational cycle.

Most of the voltages listed on the block diagram can be measured with an inexpensive VOM.

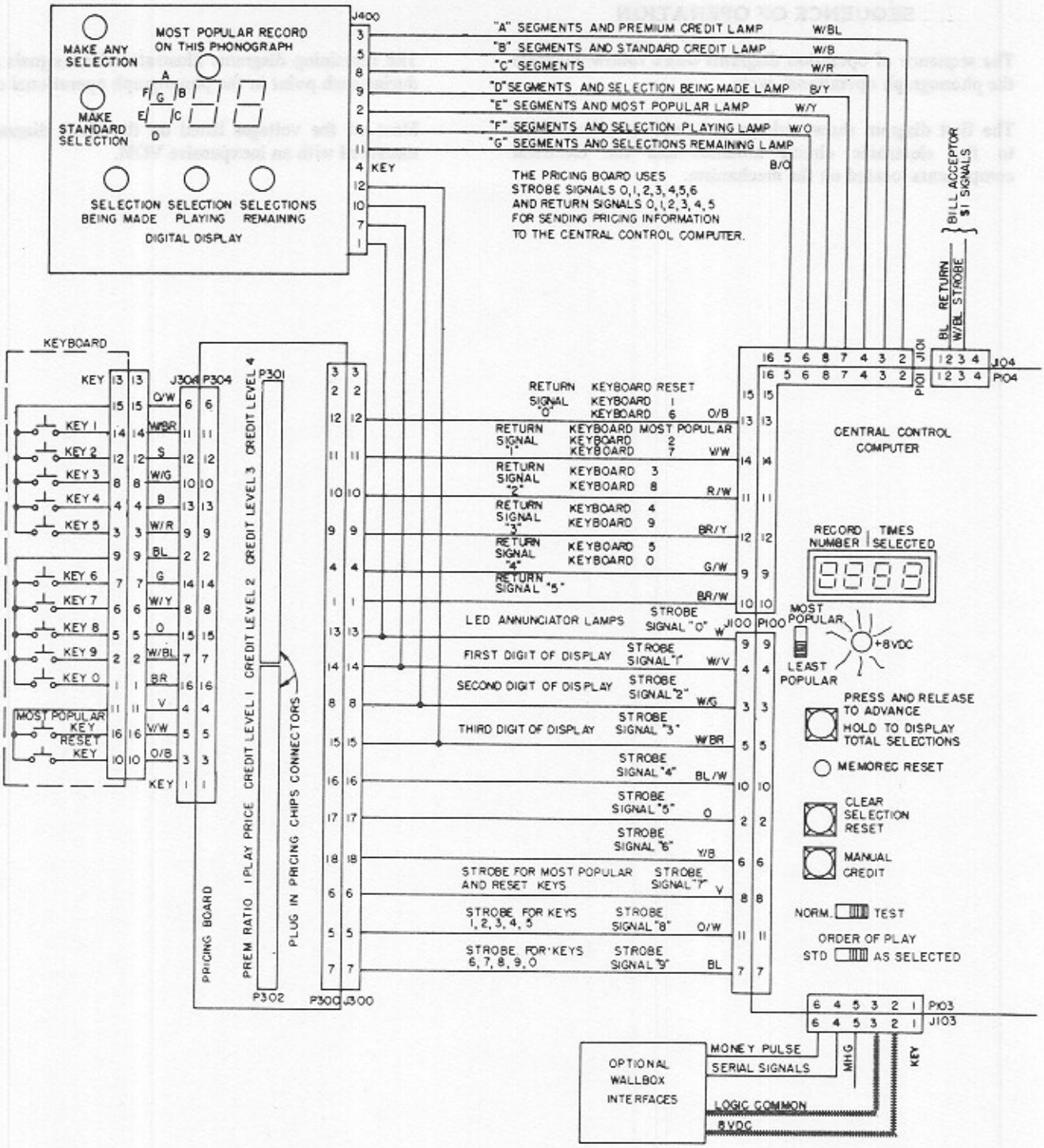

(1)

Power turned on, voltages and commons applied to circuits and components.

1. Power flows thru power cord and power switch to energize power supply. The three power supply LEDs light. The voltages go thru on-service-off switch and energize 28 VAC, + 28 VDC, and + 8 VDC busses. The "+ 8 VDC" LED on C.C.C. lights.
2. "28 VAC" goes to magazine motor, transfer motor, and mechanism control. The 28 VAC is routed thru mechanism control to the turntable motor.
3. "+ 28 VDC" goes to amplifier mute plug, and mechanism control.
4. "Power common" goes to outside record cancel, and manual scan switch, tonearm cutoff, toggle shift coils, inner and outer cam switches, detent coil, and mechanism control. It is routed thru mechanism control to play and money counters, and hub shift and speed shift coils.

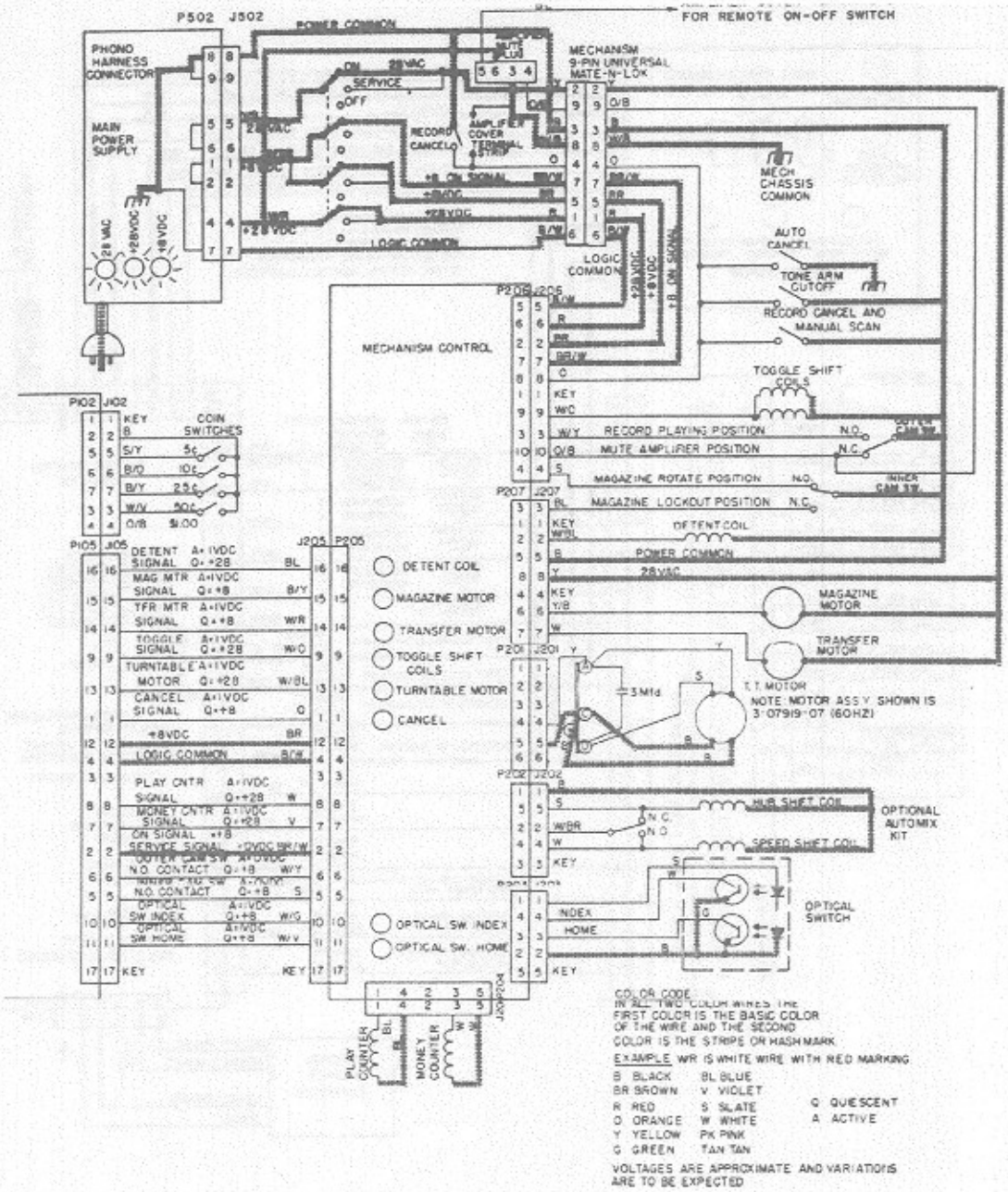

5. "+ 8 VDC and logic common" go to mechanism control. They are routed thru mechanism control to the C.C.C. and logic common to optical switch. The C.C.C. routes them to the wallbox interface.
6. "+ 8 on Signal" is routed thru mechanism control to the C.C.C.*
7. "Mech. chassis common" goes to amplifier mute plug, amplifier cover terminal strip and auto cancel.

* C.C.C. = Central Control Computer

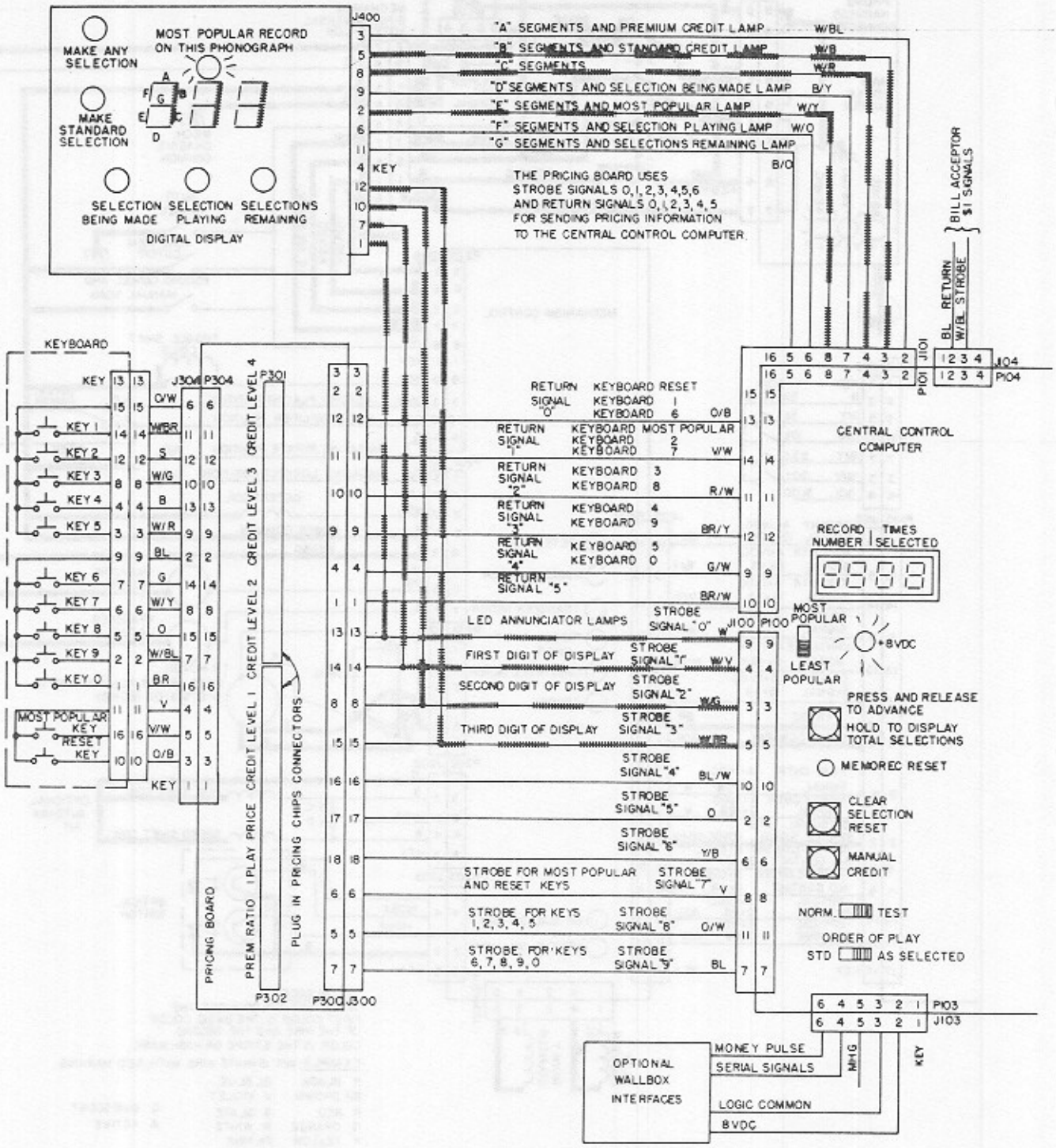

(2)

C.C.C. senses power turned on (no selections in memory).

1. The C.C.C. begins to constantly monitor the state of all switches and determines that the transfer arm (gripper bow) is in home position.
2. C.C.C. sends the detent and mag. motor signals to the mechanism control. The "detent" and "Mag. Motor" LED's light. The mechanism control energizes the detent coil and magazine motor.
3. The magazine rotates and magazine gear teeth interrupt the optical switch light beam causing the "optical sw. index" LED to flash. The C.C.C. advances the magazine (record) position by one each time the LED flashes from dark to light.

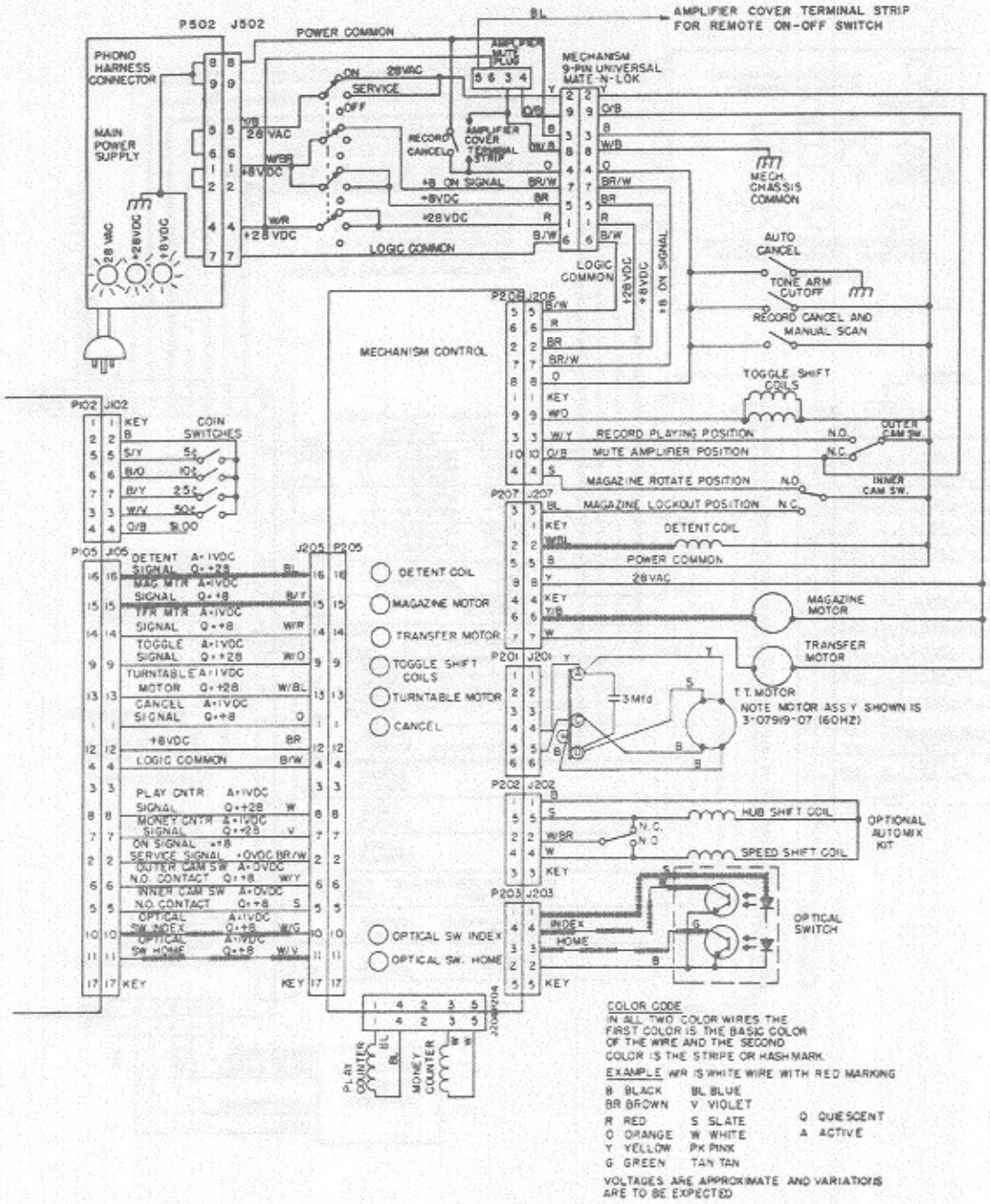

The "optical sw. home" LED lights when record position "99" aligns with the transfer arm. When this happens the C.C.C. sets the next magazine position equal to record "0".

4. Digital display and most popular LED flash and show most popular record on the phono. This continues during standby. The diagram shows record "111" as the most popular.

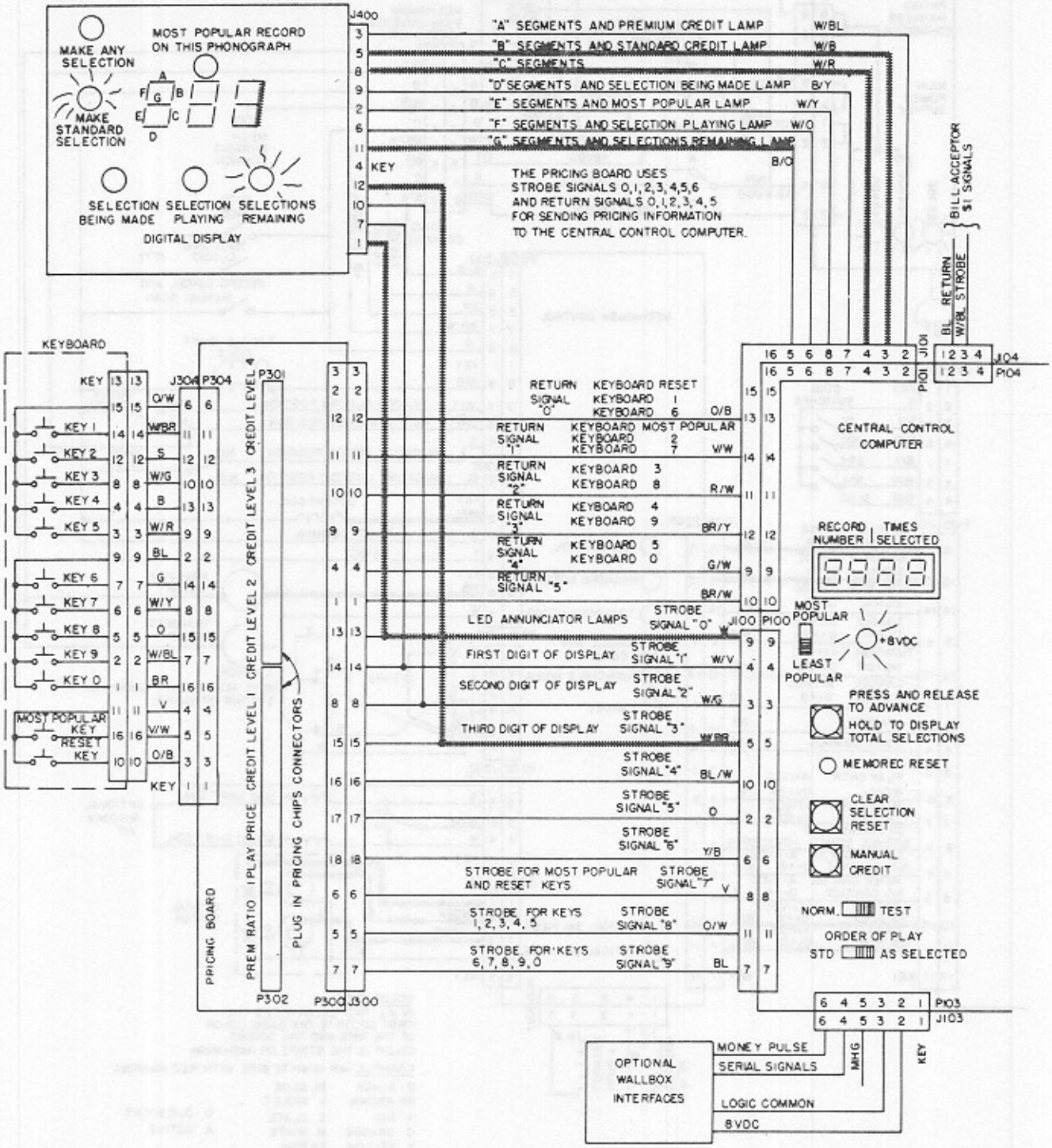

(3)

Patron inserts quarter. Standard credit established. (Credit is set at 1 play for 25¢, 3 for 50¢ and 1 premium equals 2 standard).

1. Patron inserts quarter into coin slot. The coin passes through the validator and actuates the 25¢ coin switch.
2. The C.C.C. senses the switch closure and stores 5 money units (nickels) in its memory.
3. 5 pulses are sent to the money counter.

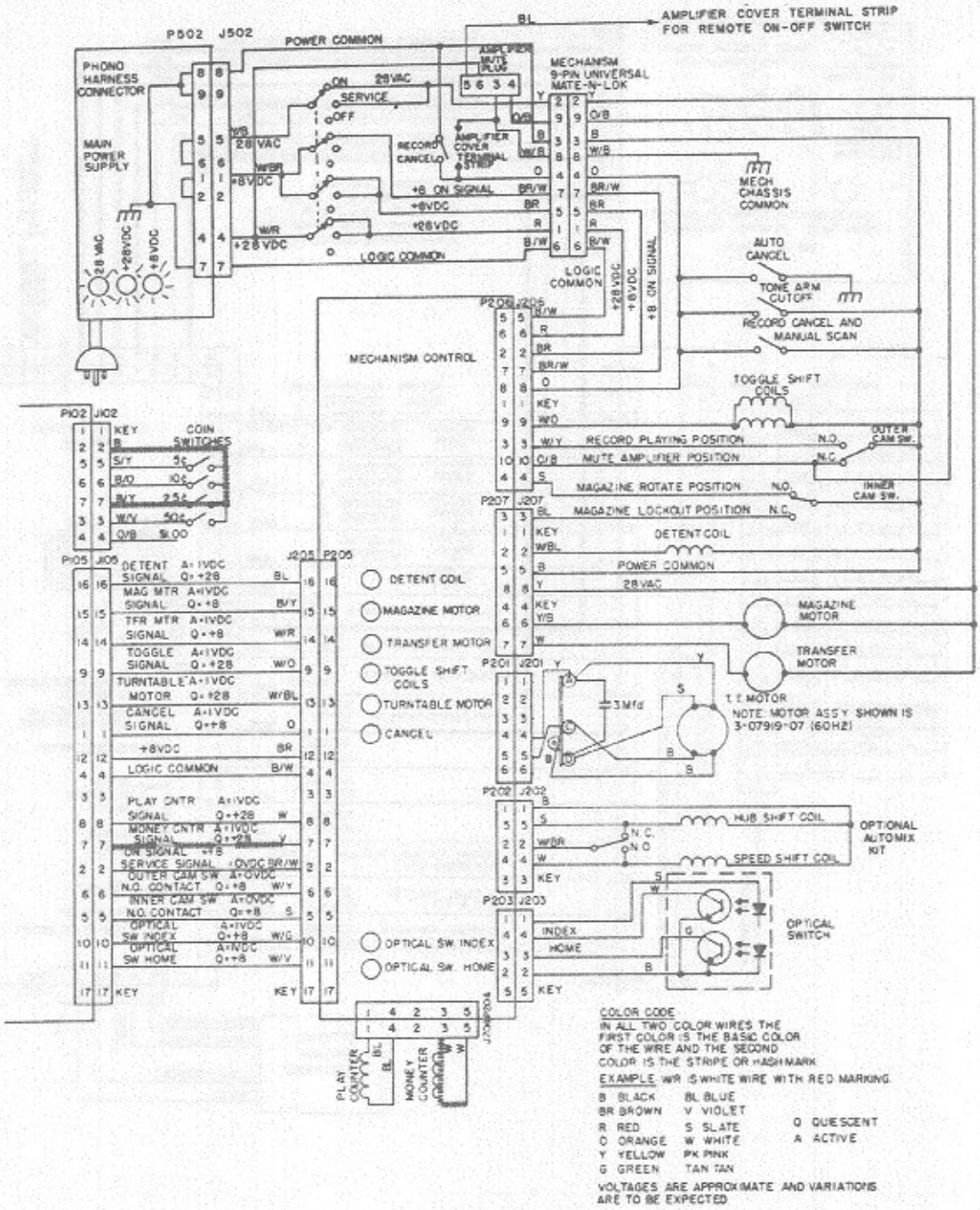

4. The C.C.C. uses the amount of money stored in its memory and the pricing information which it reads from the pricing board to calculate the remaining credit equal to 1.
5. The C.C.C. turns on the "standard credit" LED.
6. The "selections remaining" LED lights and the digital display shows 1 credit for about four seconds.

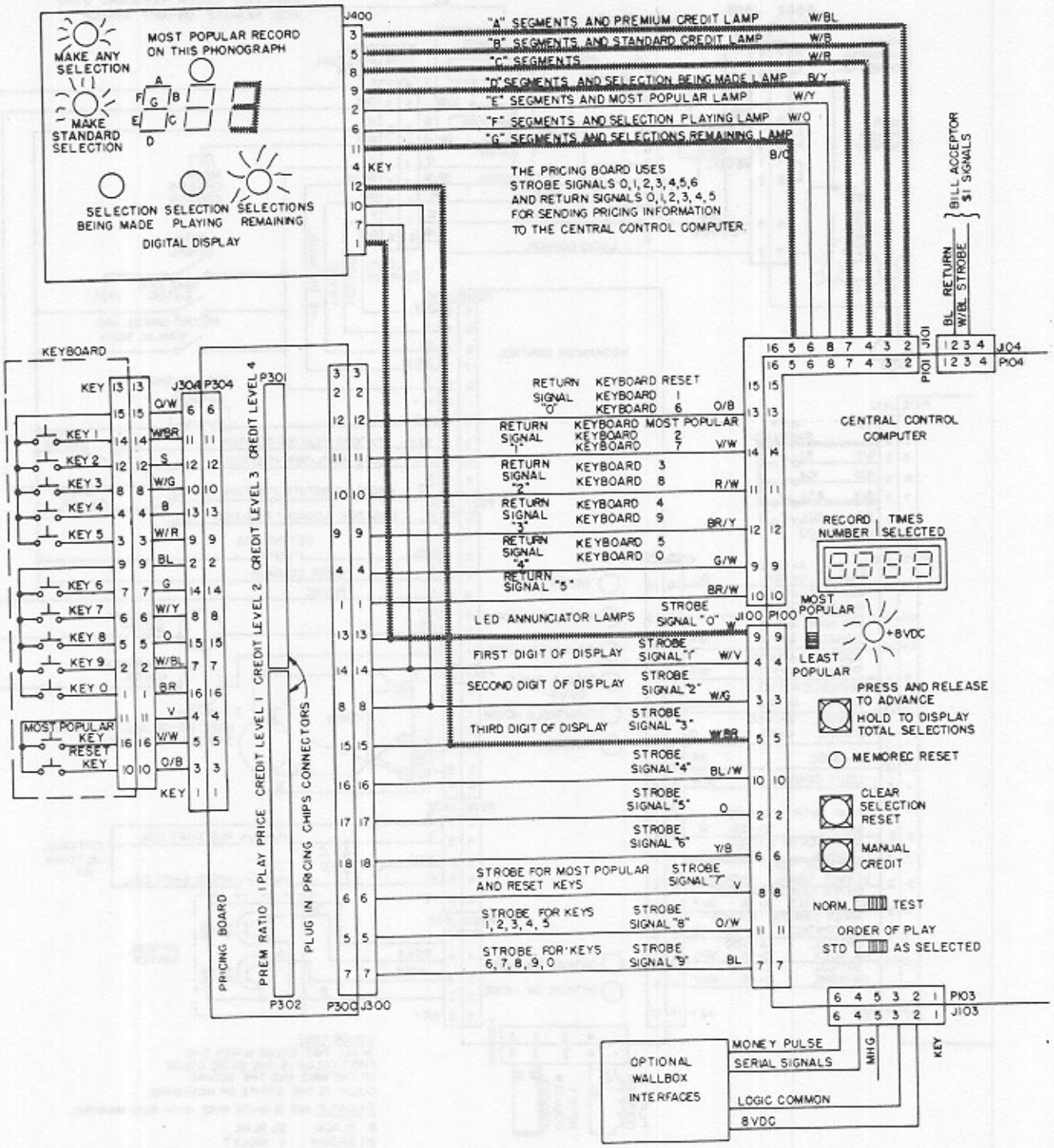

(4)

Second quarter inserted. Premium credit established.

1. Patron inserts another quarter into coin slot. The coin passes through the validator and actuates the 25¢ coin switch.
2. The C.C.C. senses the switch closure and stores 5 money units (nickels) in its memory.
3. Five pulses are sent to the money counter.

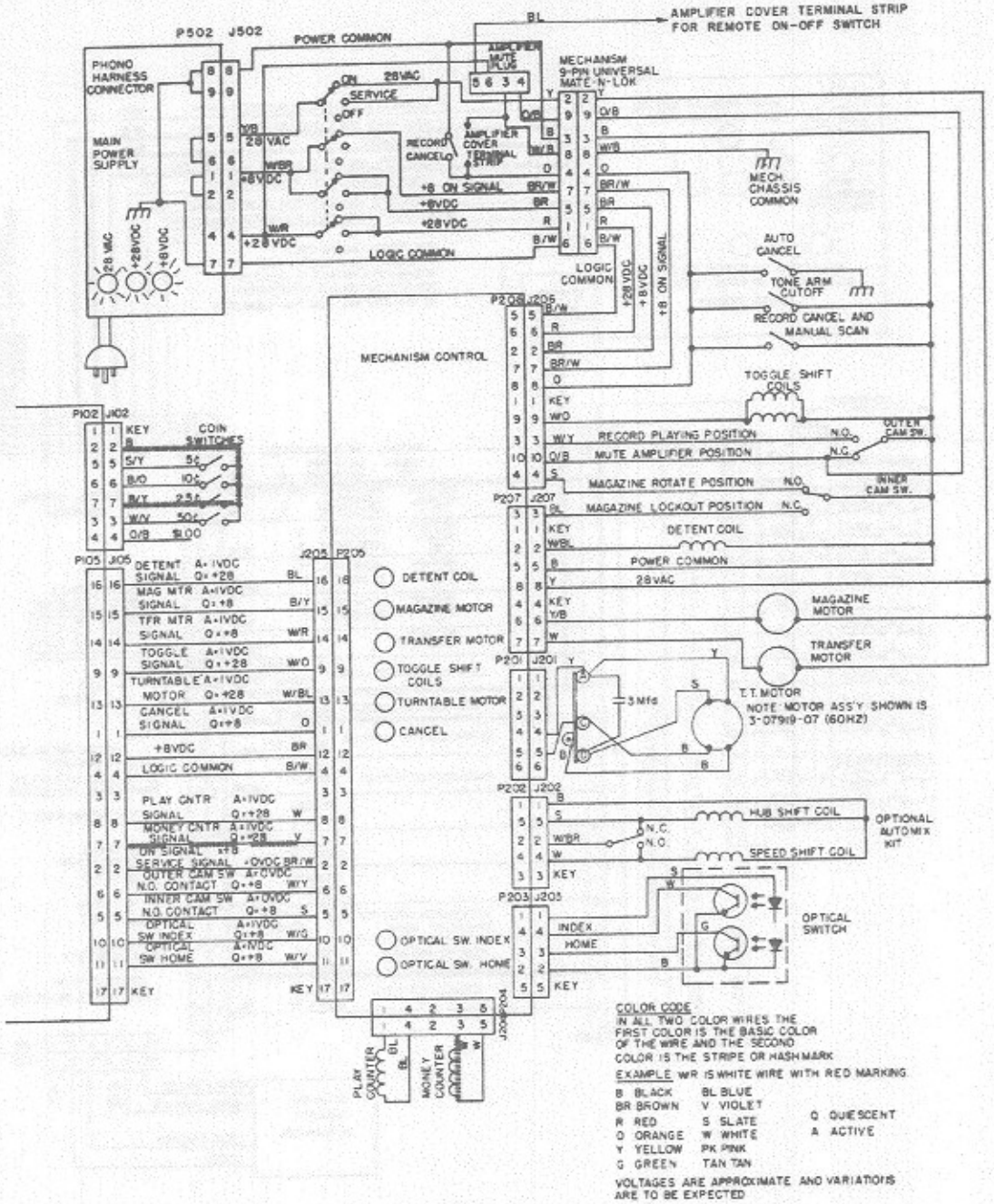

4. The C.C.C. uses the amount of money stored in its memory and the pricing board information to calculate the remaining credit equal to 3.
5. C.C.C. turns on both standard credit and "premium credit" LEDs.
6. The "selections remaining" LED lights and the digital display shows 3 credits for about four seconds.

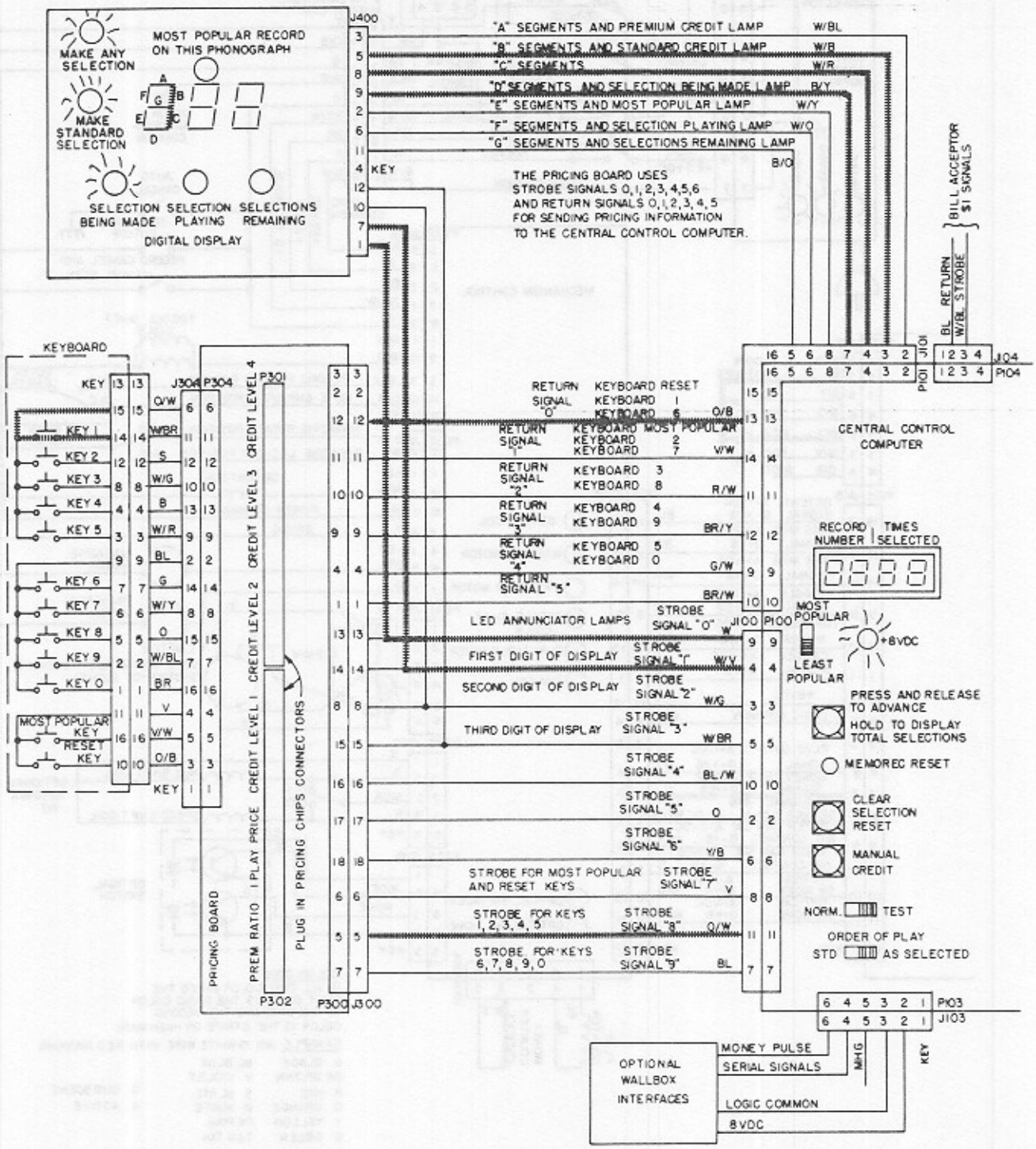

(5)

First digit selected and displayed.

1. Patron presses first digit of his selection (in this illustration number 1).
2. The C.C.C. senses the key closure, checks that credit is available, stores the selected first digit and displays it on the digital display. The "selection being made" LED lights.

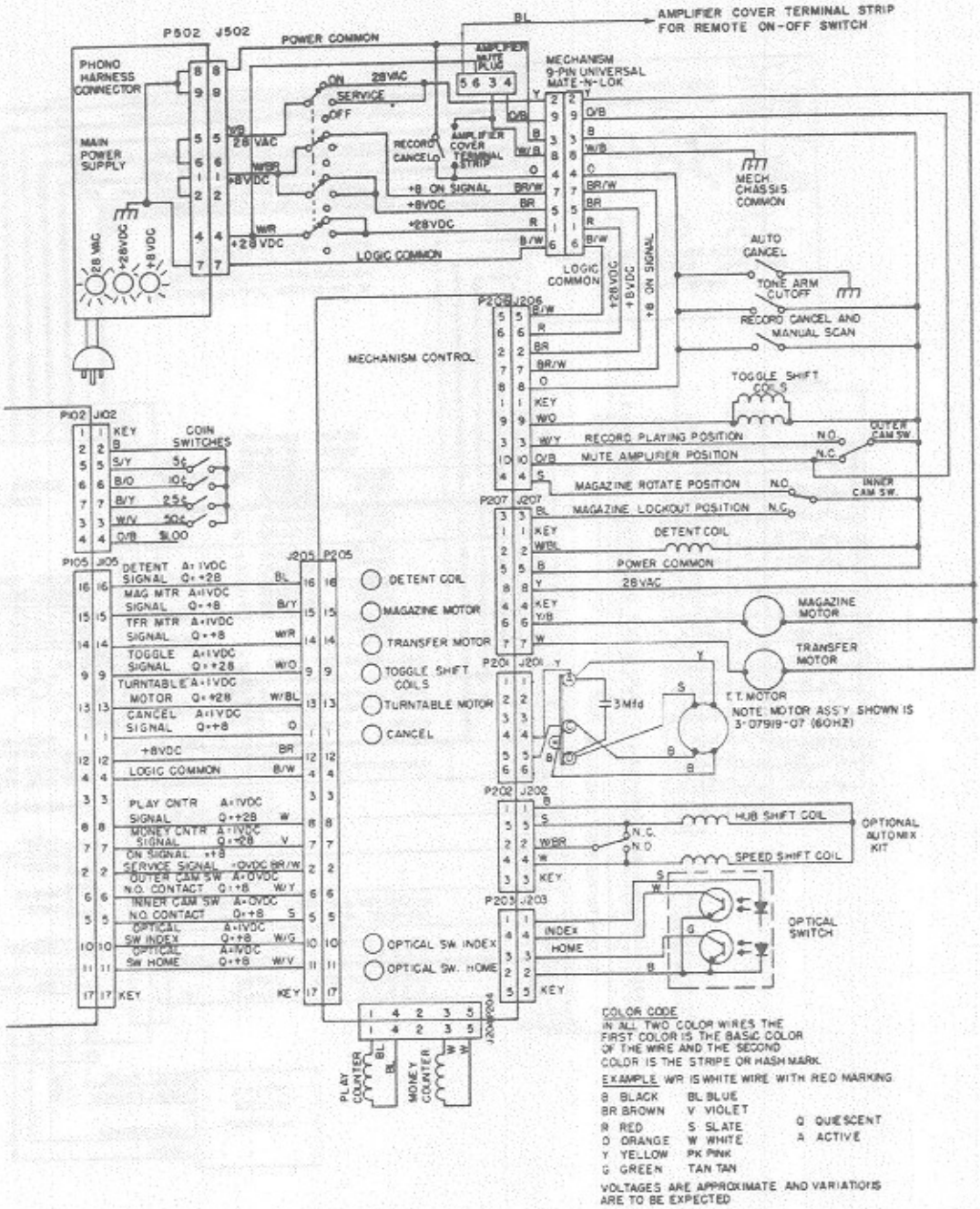

NOTE

The first digit of a selection must be a 1 or a 2. If any other key is pushed the computer ignores it. To make a correct selection merely push the correct key.

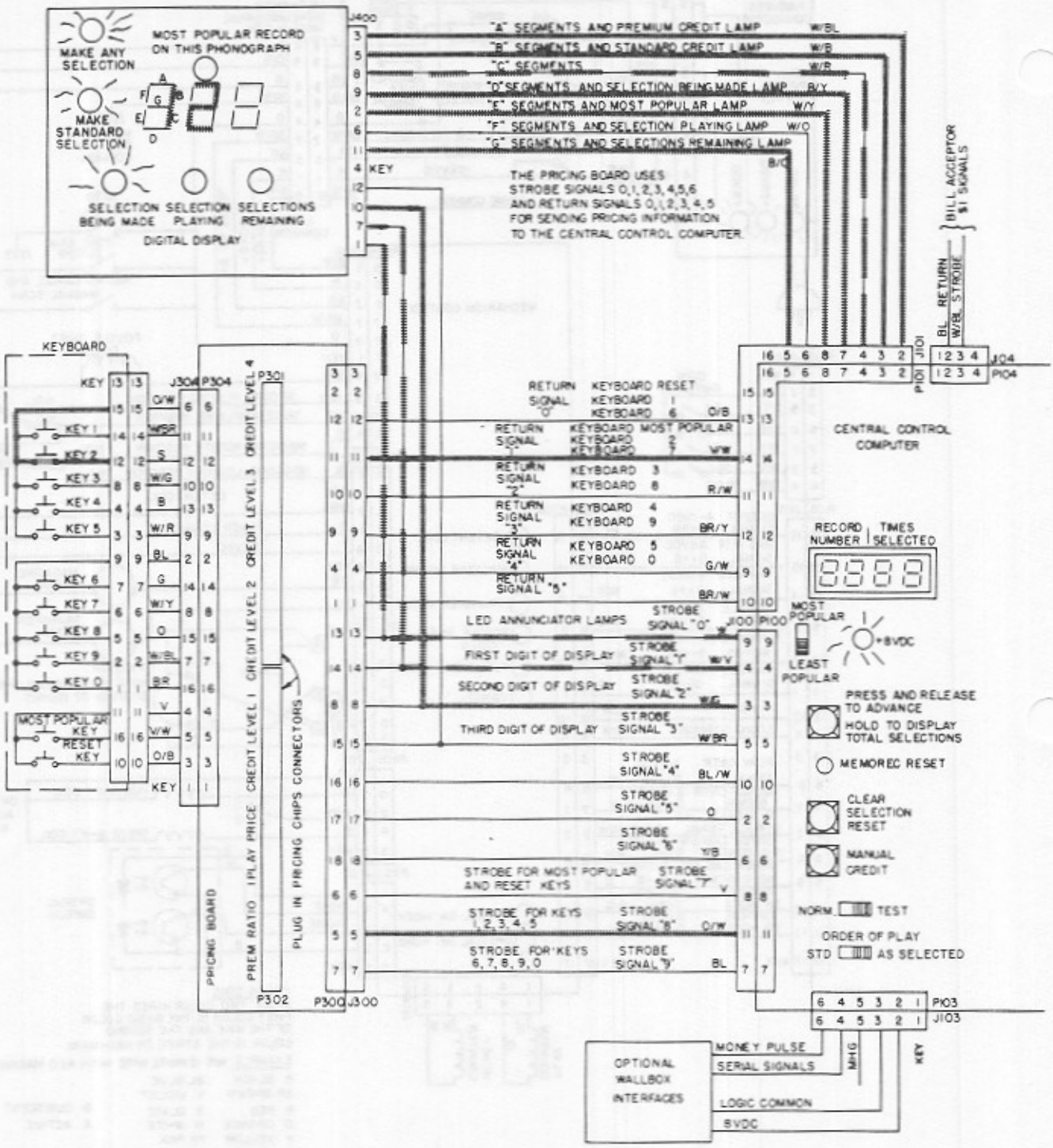

(6)

Second digit selected and displayed.

1. Patron presses second digit of his selection (in this illustration number 2).
2. The C.C.C. senses the key closure, stores the selected second digit and displays it.

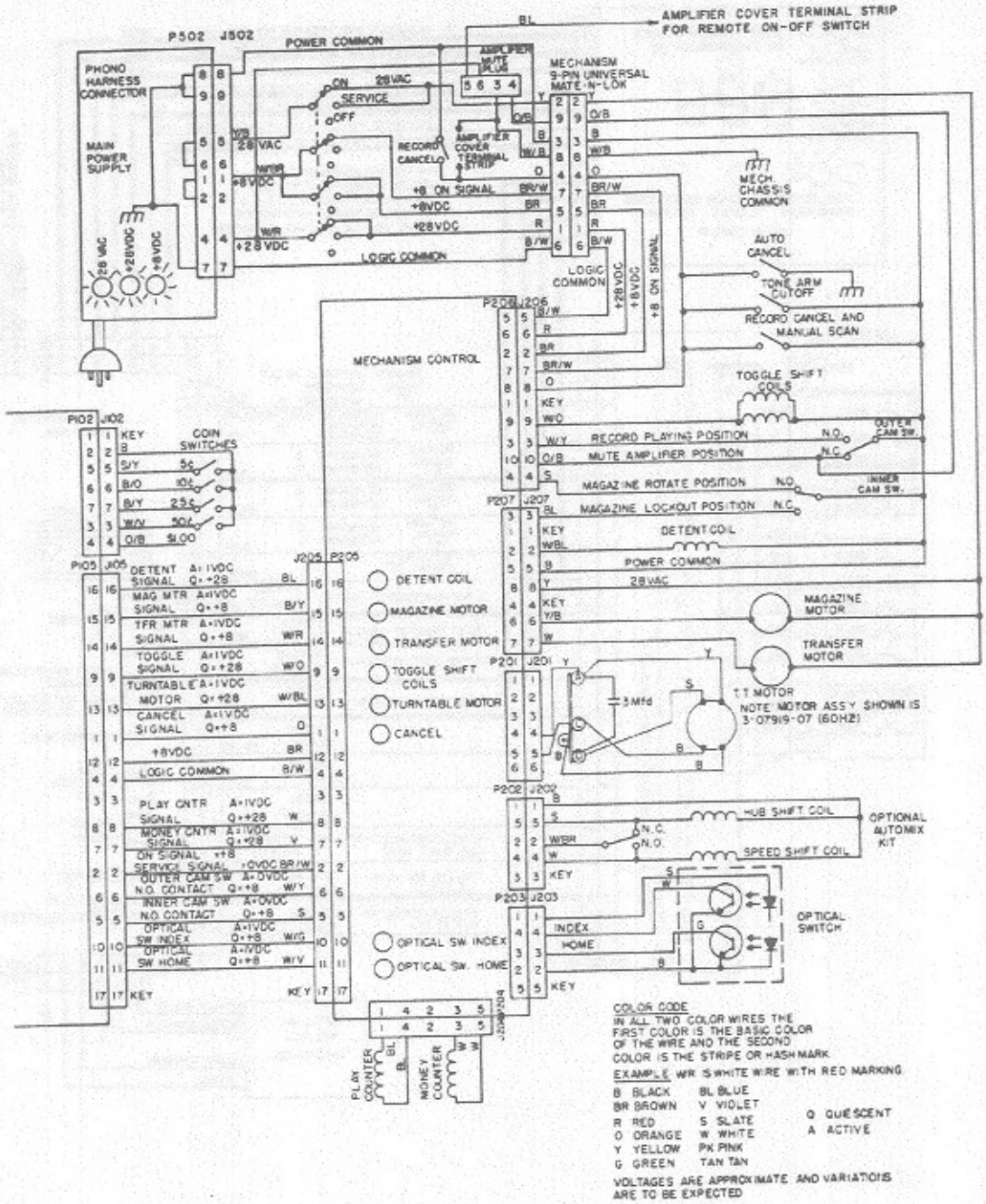

NOTE

If the phonograph has premium selections and the selection is in a premium group, and premium credit is not available the key is ignored. Either add more credit or make a standard selection.

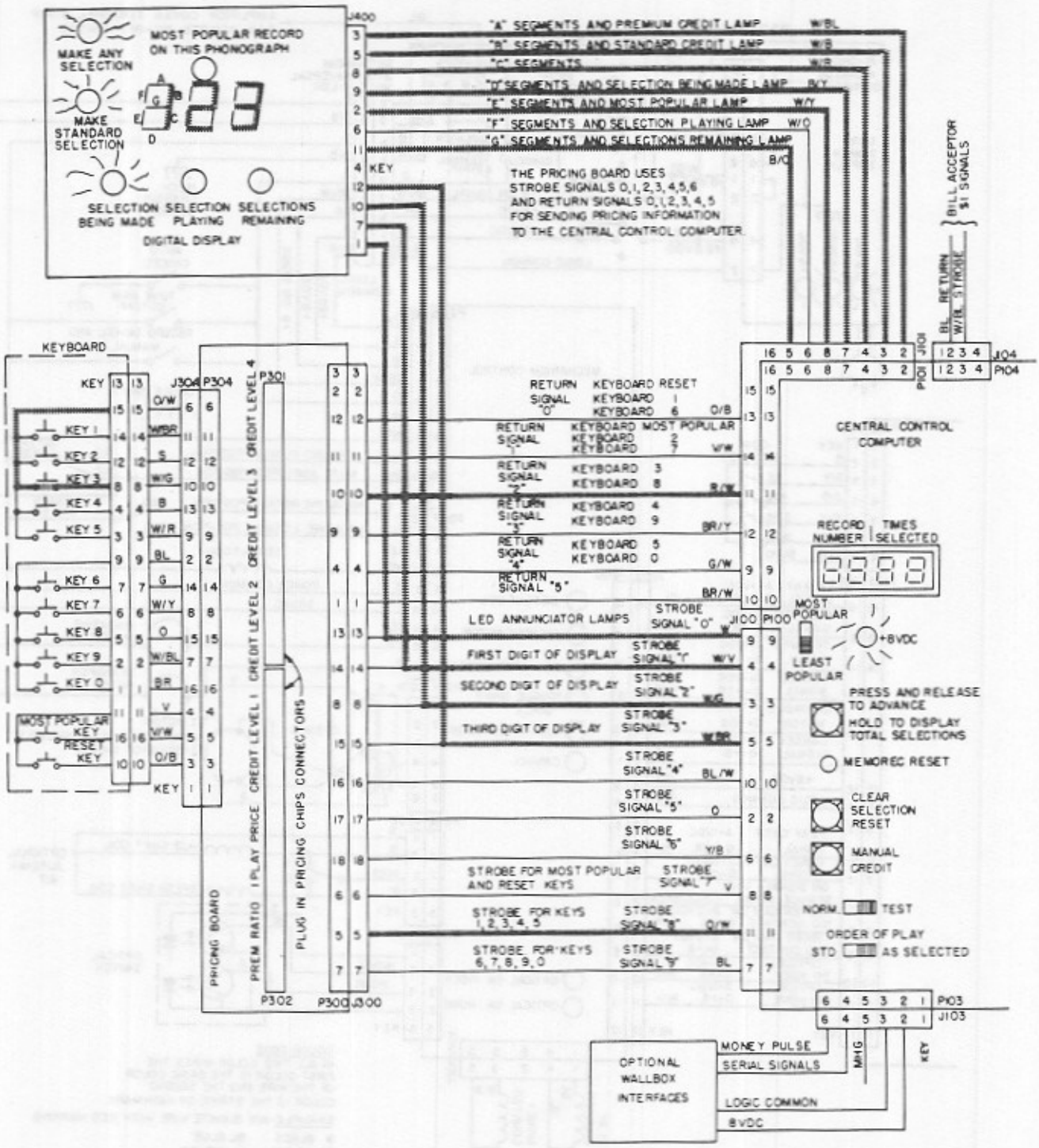

(7)

Third digit selected and displayed - selection stored, Memorec incremented.

1. Patron presses third digit of his selection (in this illustration number 3).
2. The C.C.C. senses the key closure, stores the third digit and displays it.

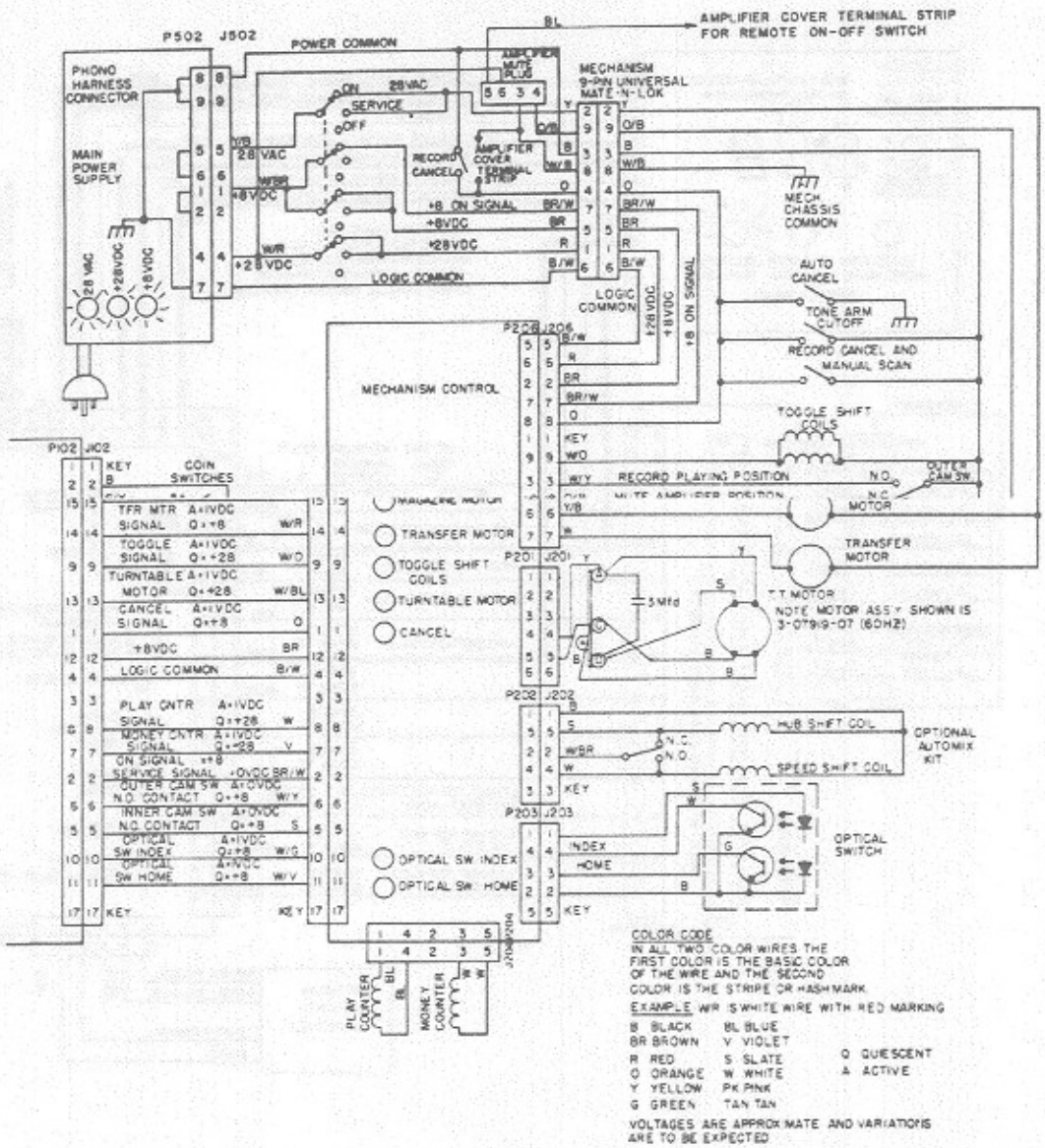

3. Selection is stored in C.C.C.
4. Memorec data in C.C.C. is incremented.

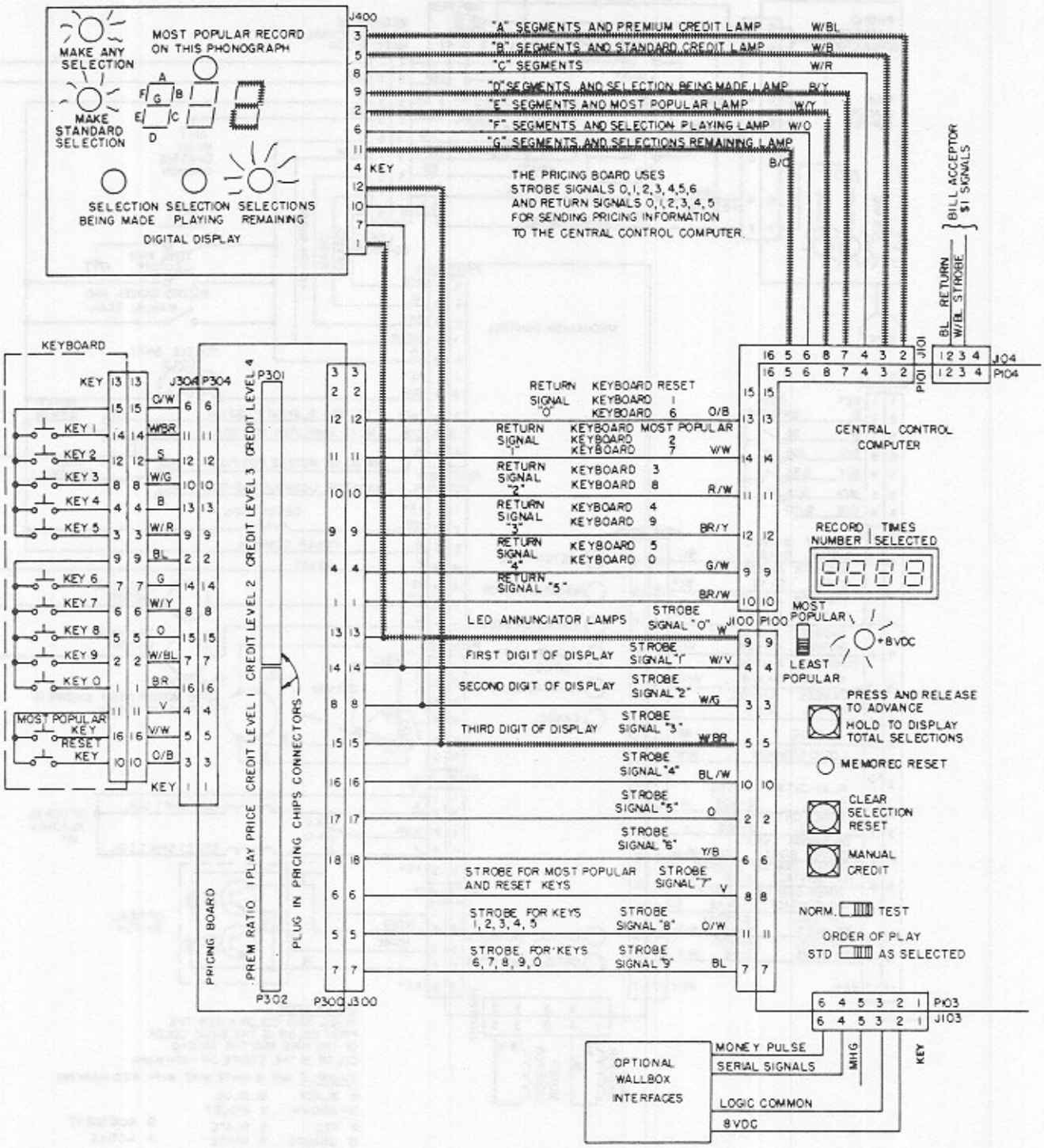

(8)

Credit cancelled - Selections remaining displayed.

1. C.C.C. cancels one credit (two credits would be cancelled for a premium selection).
2. "Selections remaining" LED lights and display shows 2 credits.

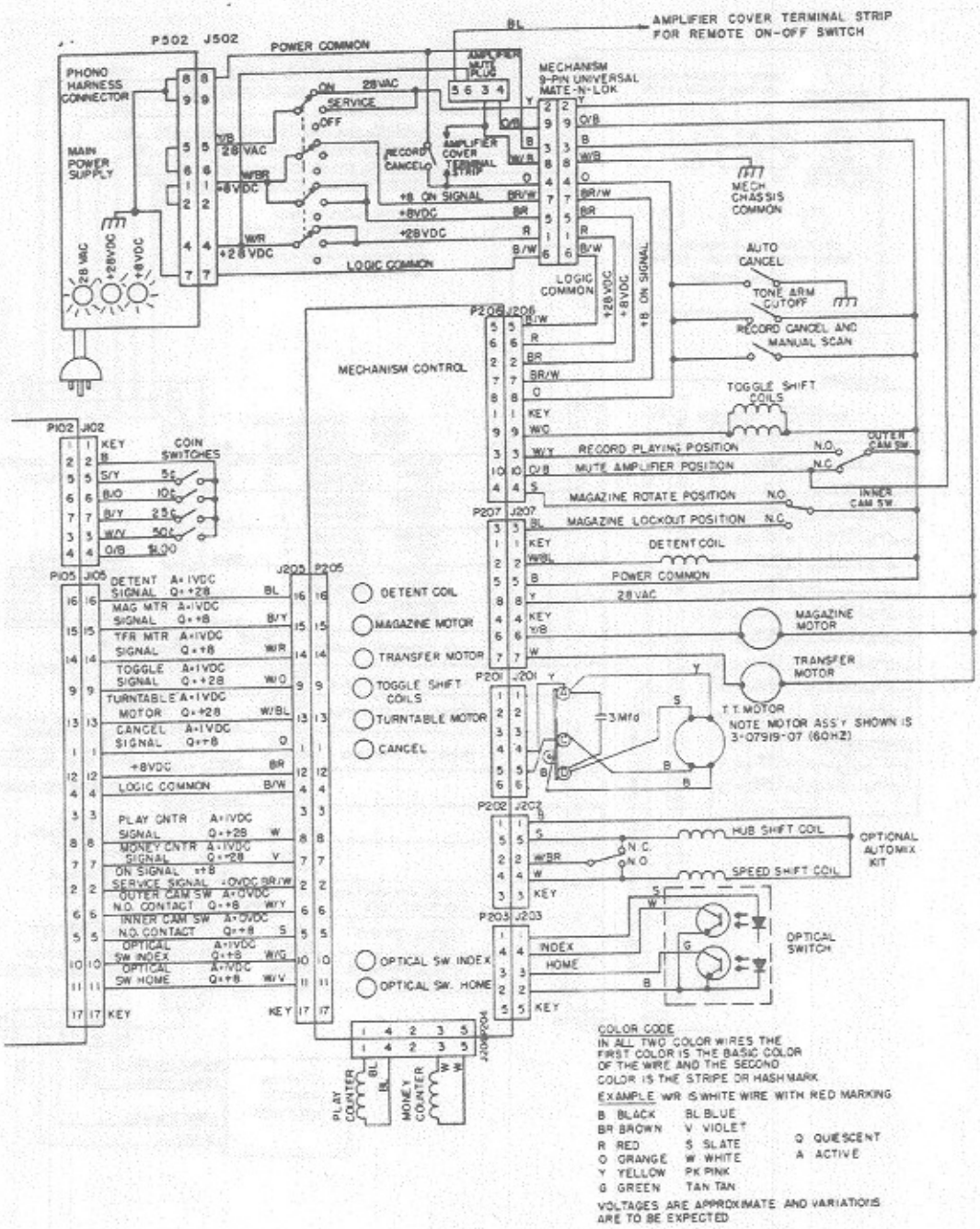

COLOR CODE
IN ALL TWO COLOR WIRES THE FIRST COLOR IS THE BASIC COLOR OF THE WIRE AND THE SECOND COLOR IS THE STRIPE OR HASH MARK
EXAMPLE WR IS WHITE WIRE WITH RED MARKING

B BLACK	BL BLUE	Q QUIESCENT
BR BROWN	V VIOLET	A ACTIVE
R RED	S SLATE	
O ORANGE	W WHITE	
Y YELLOW	PK PINK	
G GREEN	TAN TAN	

VOLTAGES ARE APPROXIMATE AND VARIATIONS ARE TO BE EXPECTED

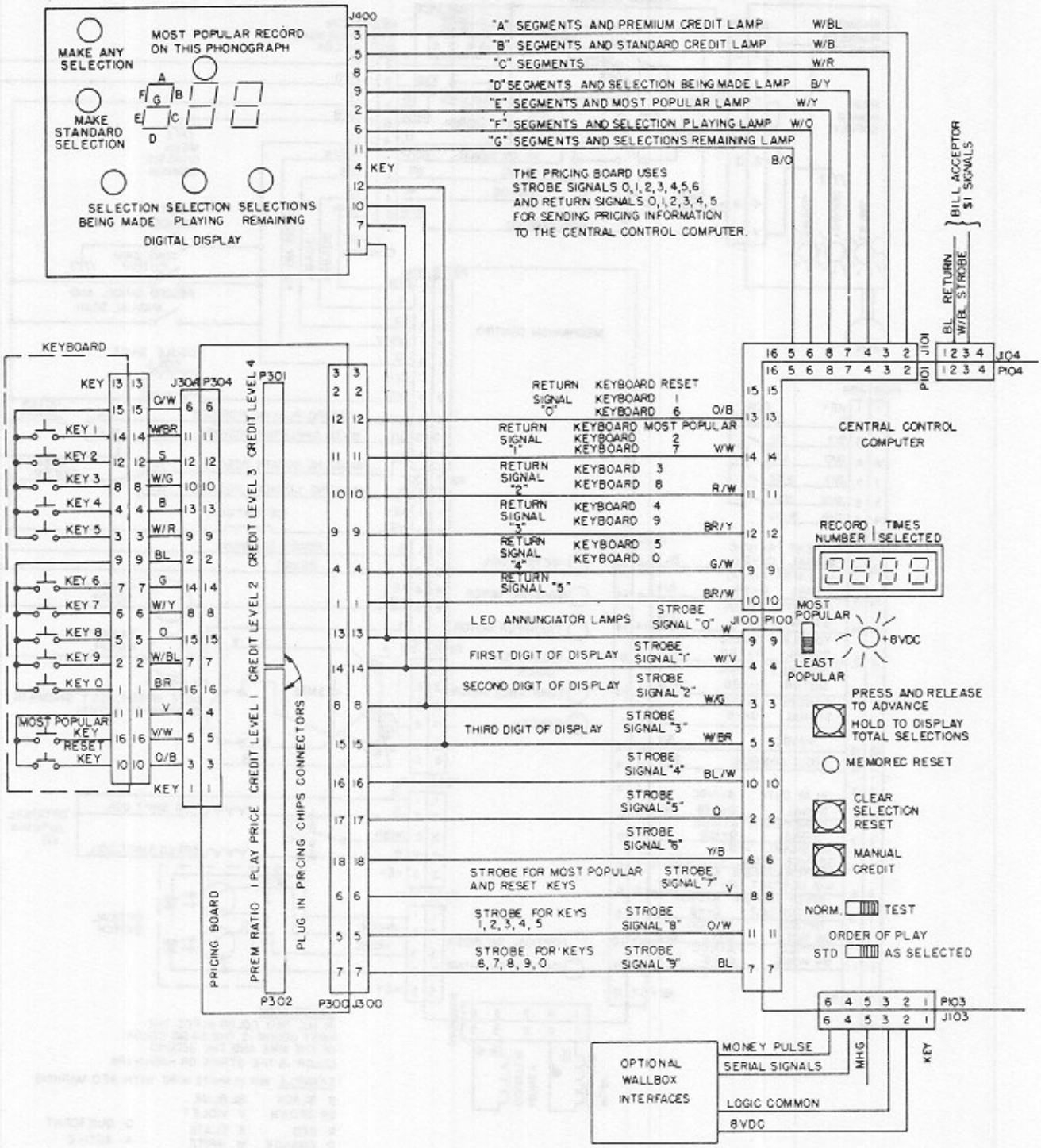

(9)

Detent coil and magazine motor energized - Magazine rotates.

1. C.C.C. signals the mechanism control to energize detent coil. "Detent coil" LED lights and the energized detent coil operates a mechanical linkage to unlock the magazine.
2. After 56 to 70 milliseconds C.C.C. signals the mechanism control to energize magazine motor. "Magazine Motor" LED lights and motor is energized causing the unlocked magazine to rotate.

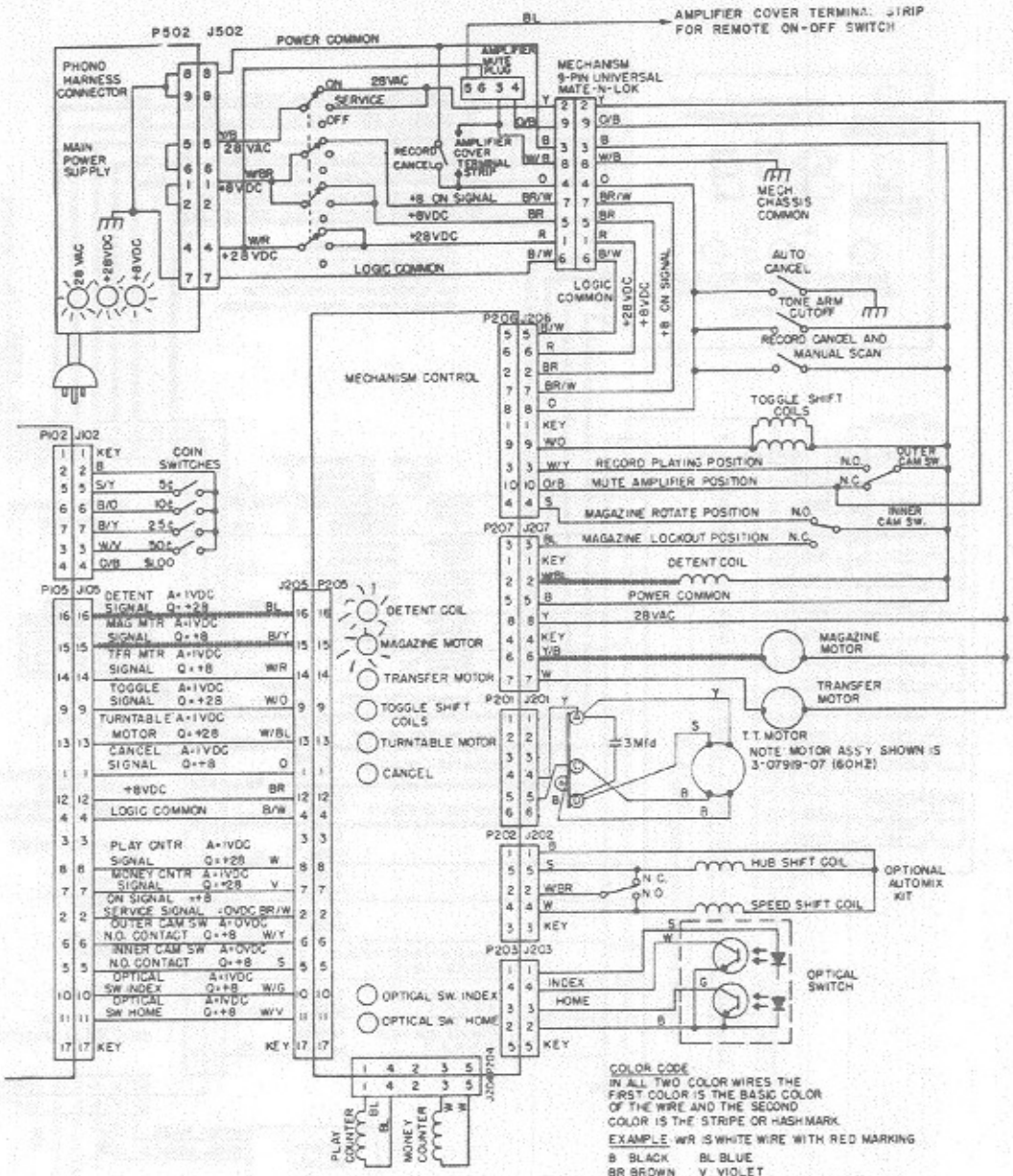
AMPLIFIER COVER TERMINAL STRIP FOR REMOTE ON-OFF SWITCH
P502 J502
POWER COMMON
PHONO HARNESS CONNECTOR
MAIN POWER SUPPLY
28 VAC
+28VDC
+8VDC
ON
SERVICE
OFF
AMPLIFIER MUTE PLUG
RECORD CANCEL
AMPLIFIER COVER TERMINAL STRIP
+8 ON SIGNAL
LOGIC COMMON
MECHANISM 9-PIN UNIVERSAL MATE-N-LOK
MECH CHASSIS COMMON
AUTO CANCEL
TONE ARM CUTOFF
RECORD CANCEL AND MANUAL SCAN
MECHANISM CONTROL
TOGGLE SHIFT COILS
RECORD PLAYING POSITION
MUTE AMPLIFIER POSITION
MAGAZINE ROTATE POSITION
MAGAZINE LOCKOUT POSITION
OUTER CAM SW
INNER CAM SW.
DETENT COIL
POWER COMMON
MAGAZINE MOTOR
TRANSFER MOTOR
T.T. MOTOR
NOTE MOTOR ASS'Y SHOWN IS 3-079119-07 (60HZ)
3Mfd
HUB SHIFT COIL
SPEED SHIFT COIL
OPTIONAL AUTOMIX KIT
OPTICAL SWITCH
OPTICAL SW. INDEX
OPTICAL SW. HOME
PLAY COUNTER
MONEY COUNTER
P102 J102
COIN SWITCHES
P105 J105
DETENT SIGNAL
MAG MTR SIGNAL
TFR MTR SIGNAL
TOGGLE SIGNAL
TURNTABLE MOTOR
CANCEL SIGNAL
LOGIC COMMON
PLAY CNTR SIGNAL
MONEY CNTR SIGNAL
ON SIGNAL
SERVICE SIGNAL
OUTER CAM SW N.O. CONTACT
INNER CAM SW N.O. CONTACT
OPTICAL SW INDEX
OPTICAL SW HOME
P206 J206
P207 J207
P201 J201
P202 J202
P203 J203
P205 J205
COLOR CODE
IN ALL TWO COLOR WIRES THE FIRST COLOR IS THE BASIC COLOR OF THE WIRE AND THE SECOND COLOR IS THE STRIPE OR HASH MARK.
EXAMPLE W/R IS WHITE WIRE WITH RED MARKING
B BLACK
BR BROWN
R RED
O ORANGE
Y YELLOW
G GREEN
BL BLUE
V VIOLET
S SLATE
W WHITE
PK PINK
TAN TAN
Q QUIESCENT
A ACTIVE
VOLTAGES ARE APPROXIMATE AND VARIATIONS ARE TO BE EXPECTED

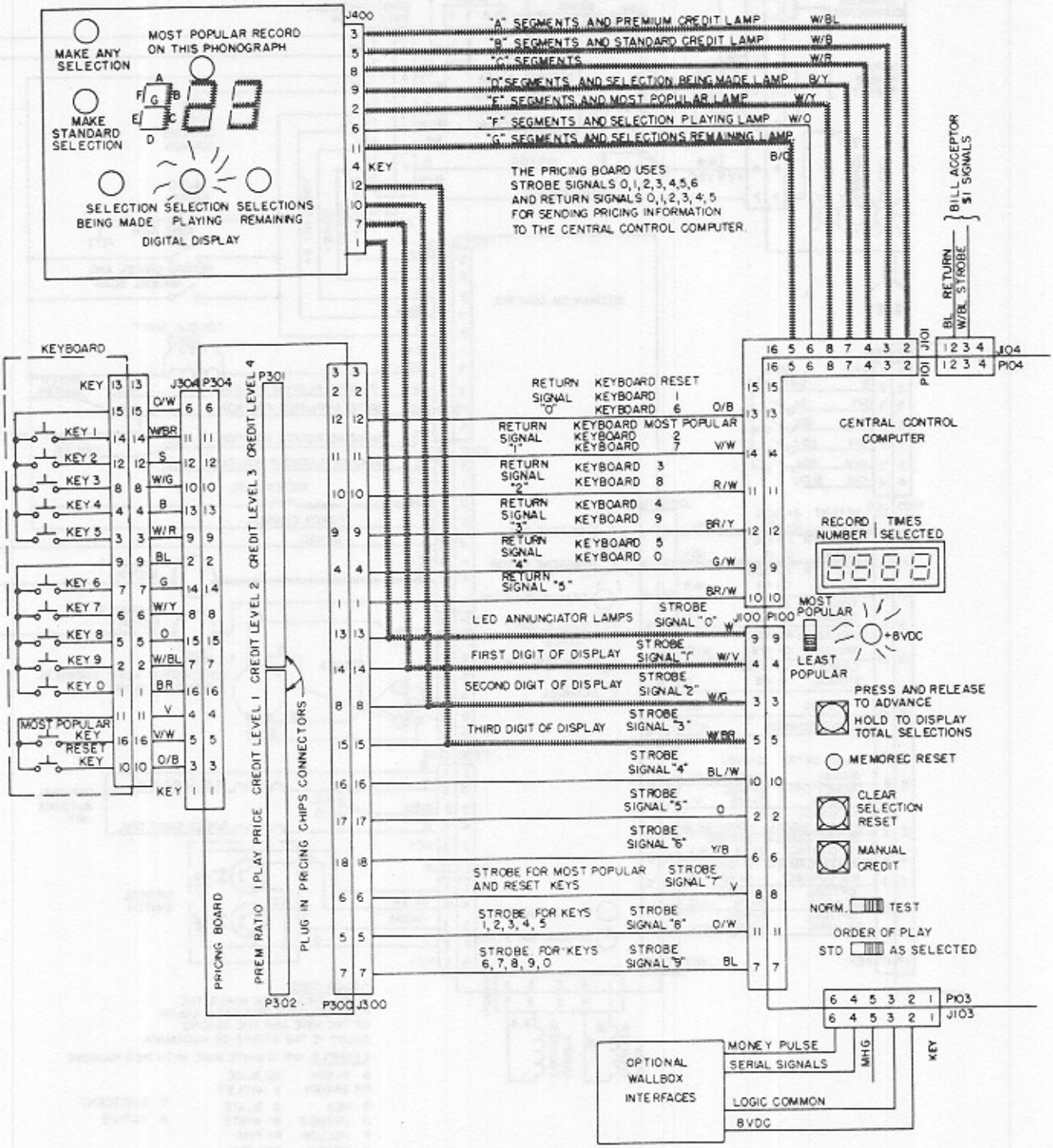

(10)

Magazine rotates until selection is located.

1. Magazine rotates and gear teeth interrupt optical switch light beam.

   NOTE: "Optical sw. index" LED going from dark to light (off to on) tells C.C.C. the magazine is moving to the next record position and two things happen:

   a. C.C.C. keeps track of magazine position by adding 1 to value stored in C.C.C.

   b. C.C.C. checks the selection memory to see if left or right side of this next record has been selected.

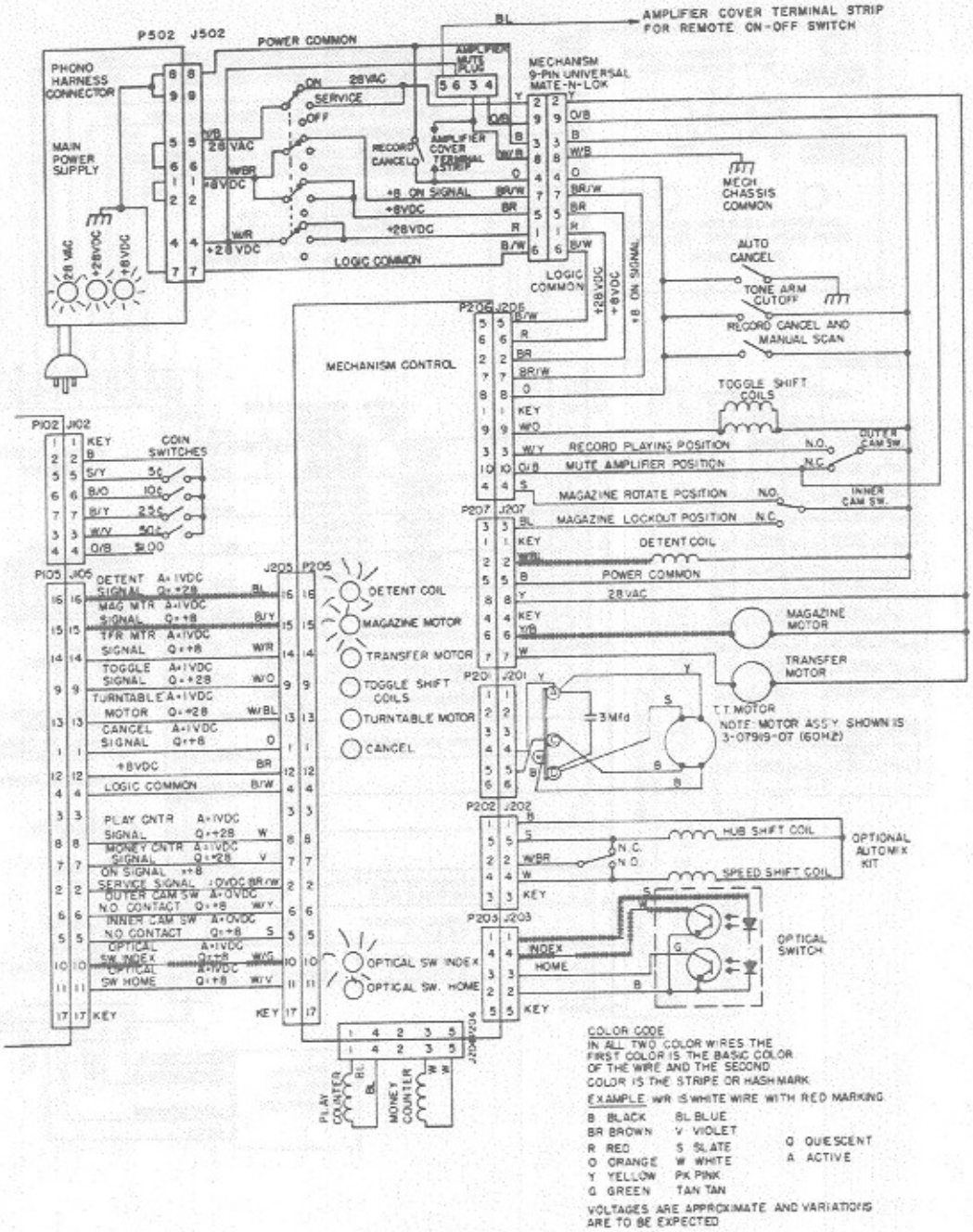

2. C.C.C. turns on "selection playing" LED.
3. Digital display shows magazine record position.

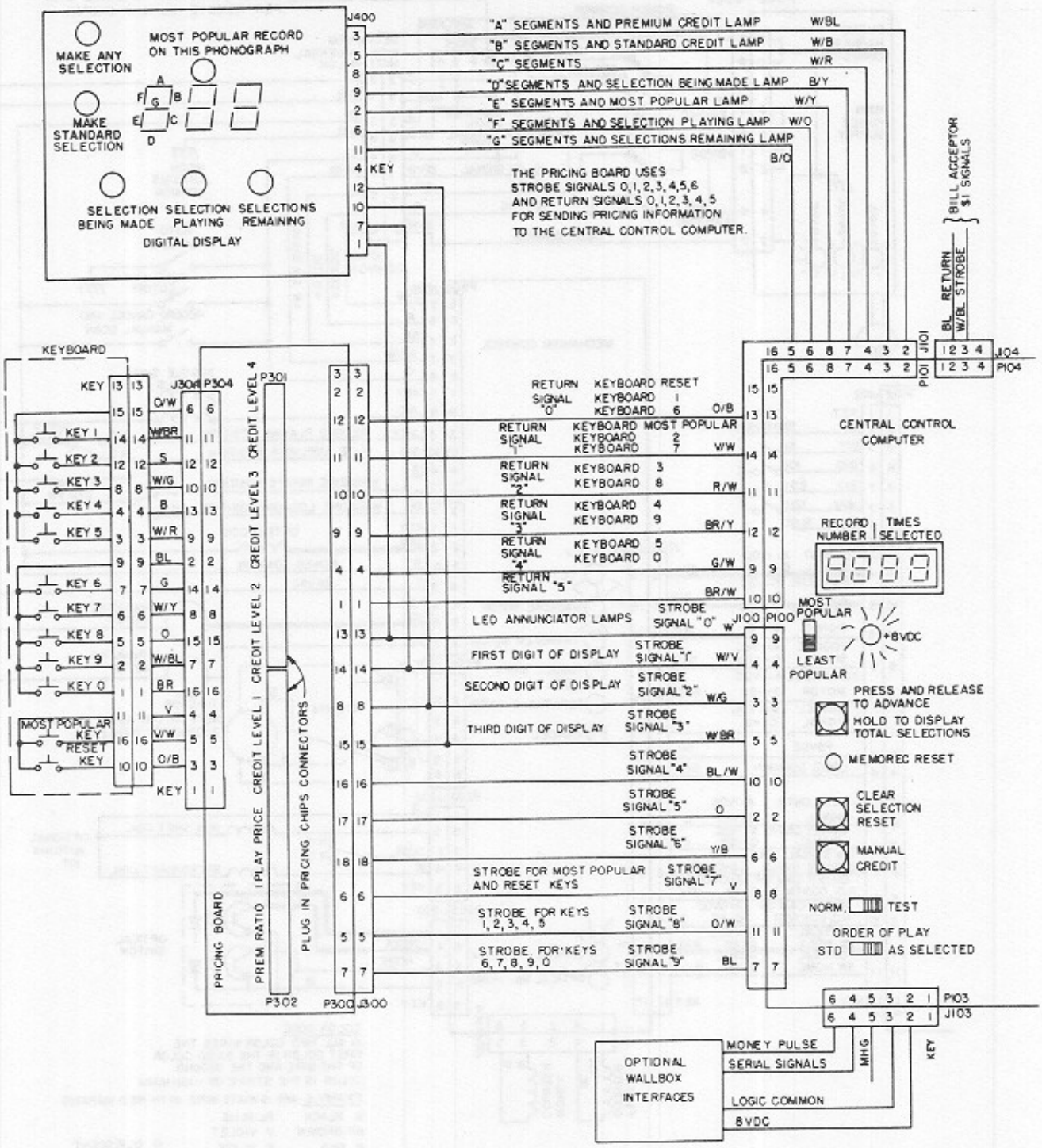

(11)

Selection located, record transferred to turntable, tone arm set down.

1. C.C.C. signals turn off "detent" and "mag. motor" LEDs causing mechanism control to de-energize detent coil and magazine motor.
2. Magazine is locked by detent pawl falling into slot in detent wheel.

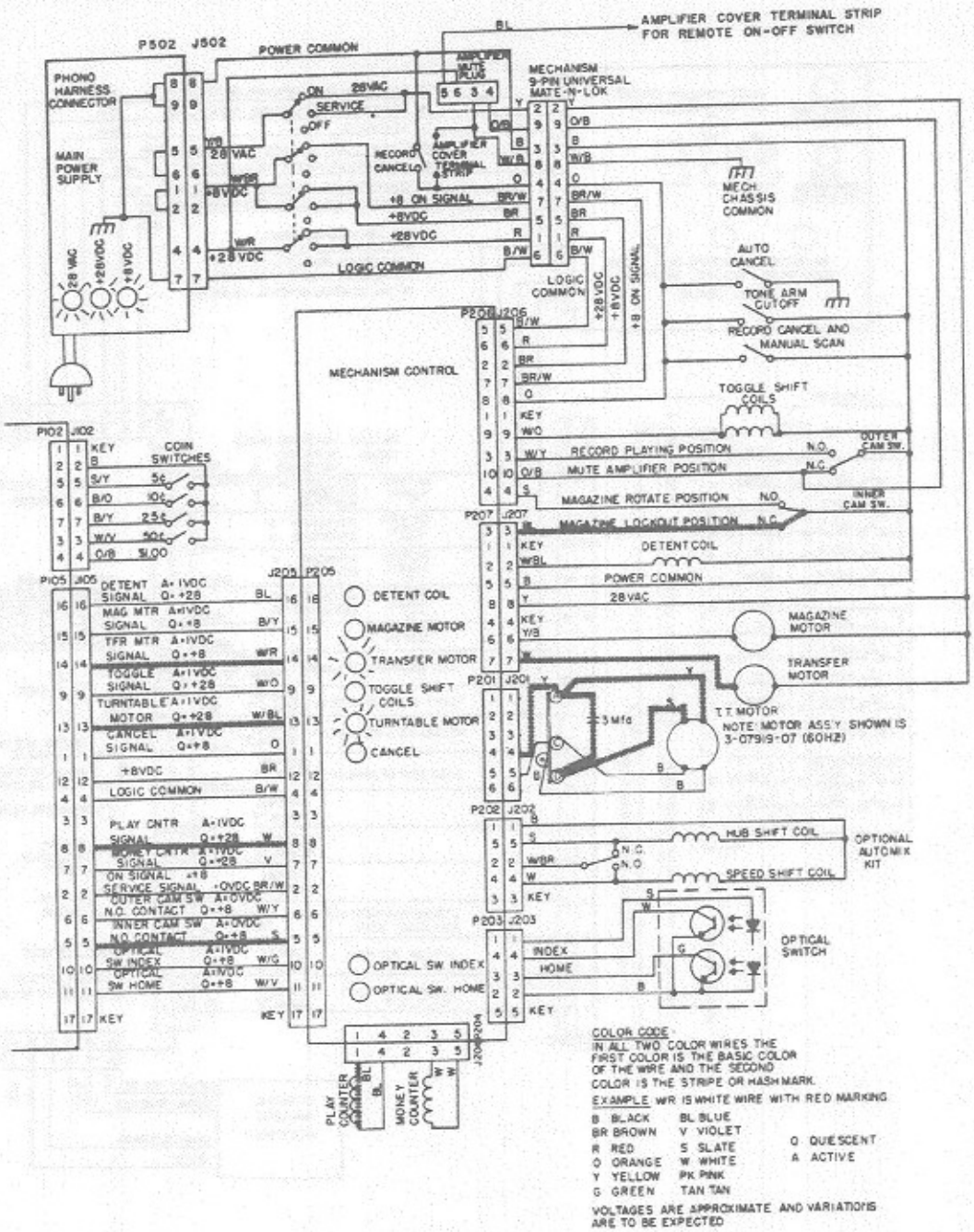

3. C.C.C. signals turn on "tran. motor" and "T.T. motor" LEDs, causing mechanism control to energize transfer and turntable motors. C.C.C. signals mechanism control to advance play counter.

4. Transfer motor rotates cam off inner cam switch. (NOTE: If the first digit of selection was a 2, the C.C.C. signal lights the "Toggle" LED causing the mechanism control to energize toggle shift coils).

5. Gripper bow picks up record, places it on turntable, and tone arm sets down.(NOTE: If a record is not placed on the turntable the Auto-Cancel operates when the tone arm sets down.

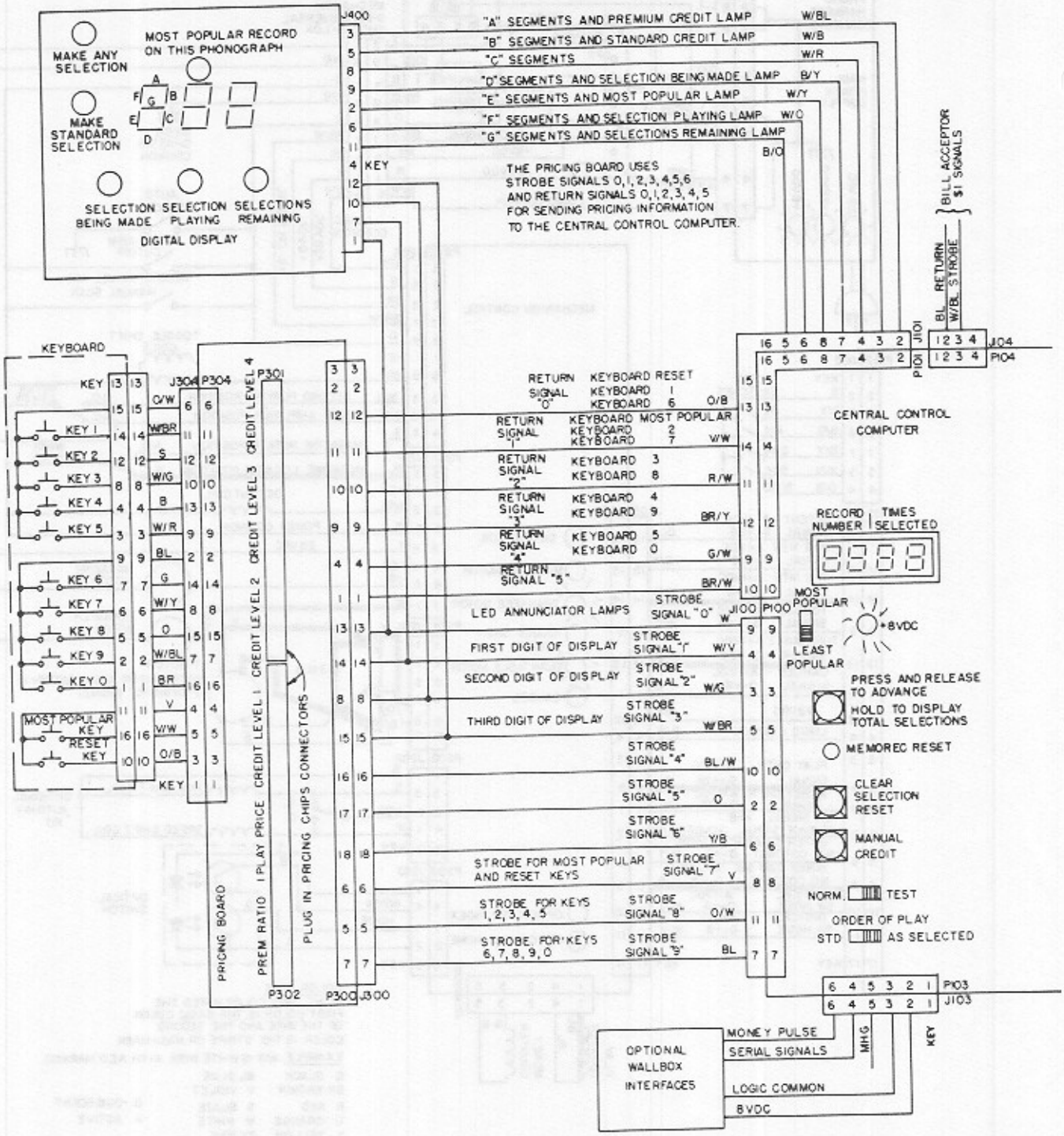

(12)

Amplifier unmuted and record plays.

1. Transfer motor rotates and cam moves onto outer cam switch.
2. "Outer cam sw. N.O. contact" signals C.C.C. to turn off transfer motor. "Tran. motor" LED turns off and transfer motor stops.

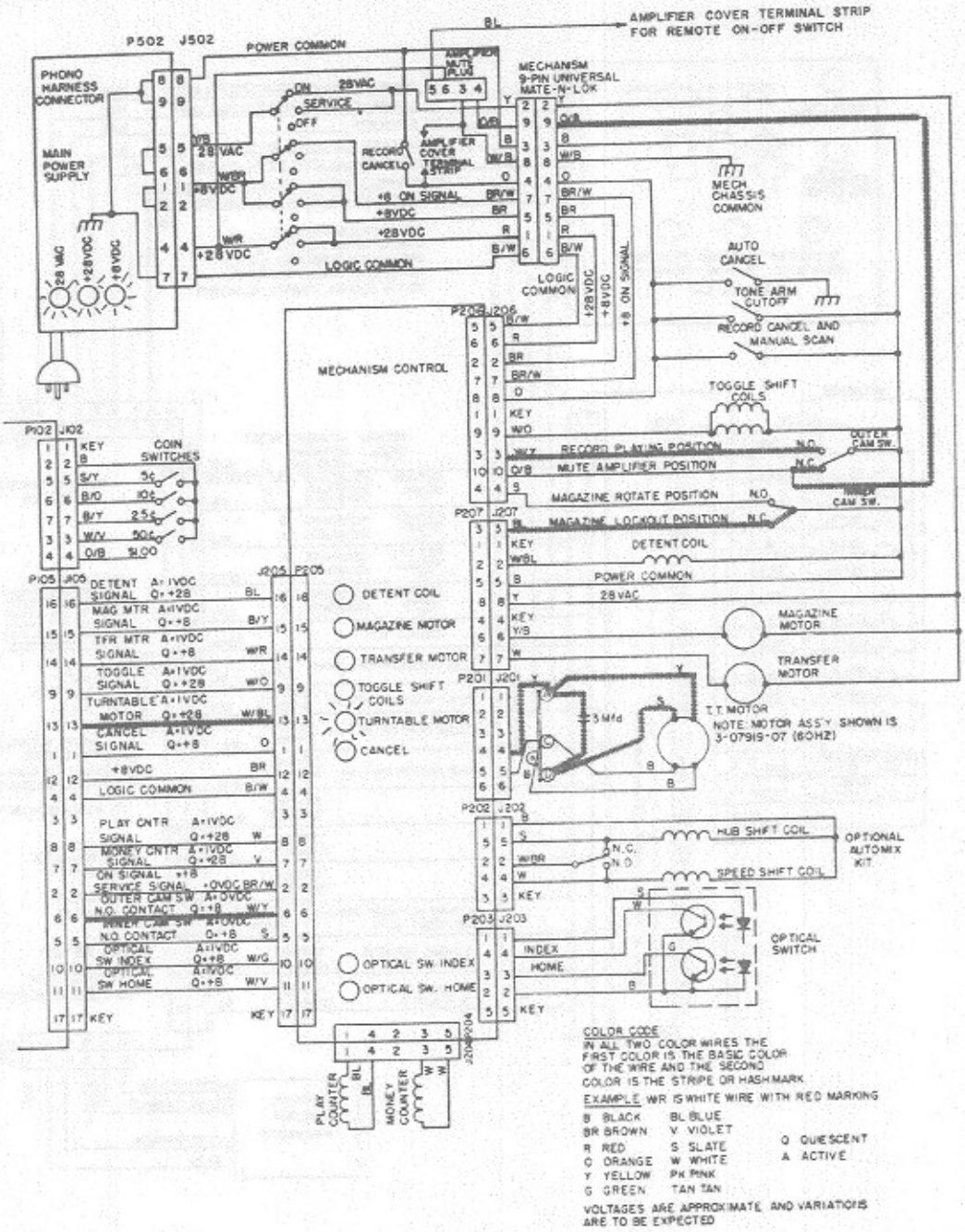

3. Ground signal is removed from "Outer cam sw. N.C. contact", causing amplifier to unmute.
4. Record plays.

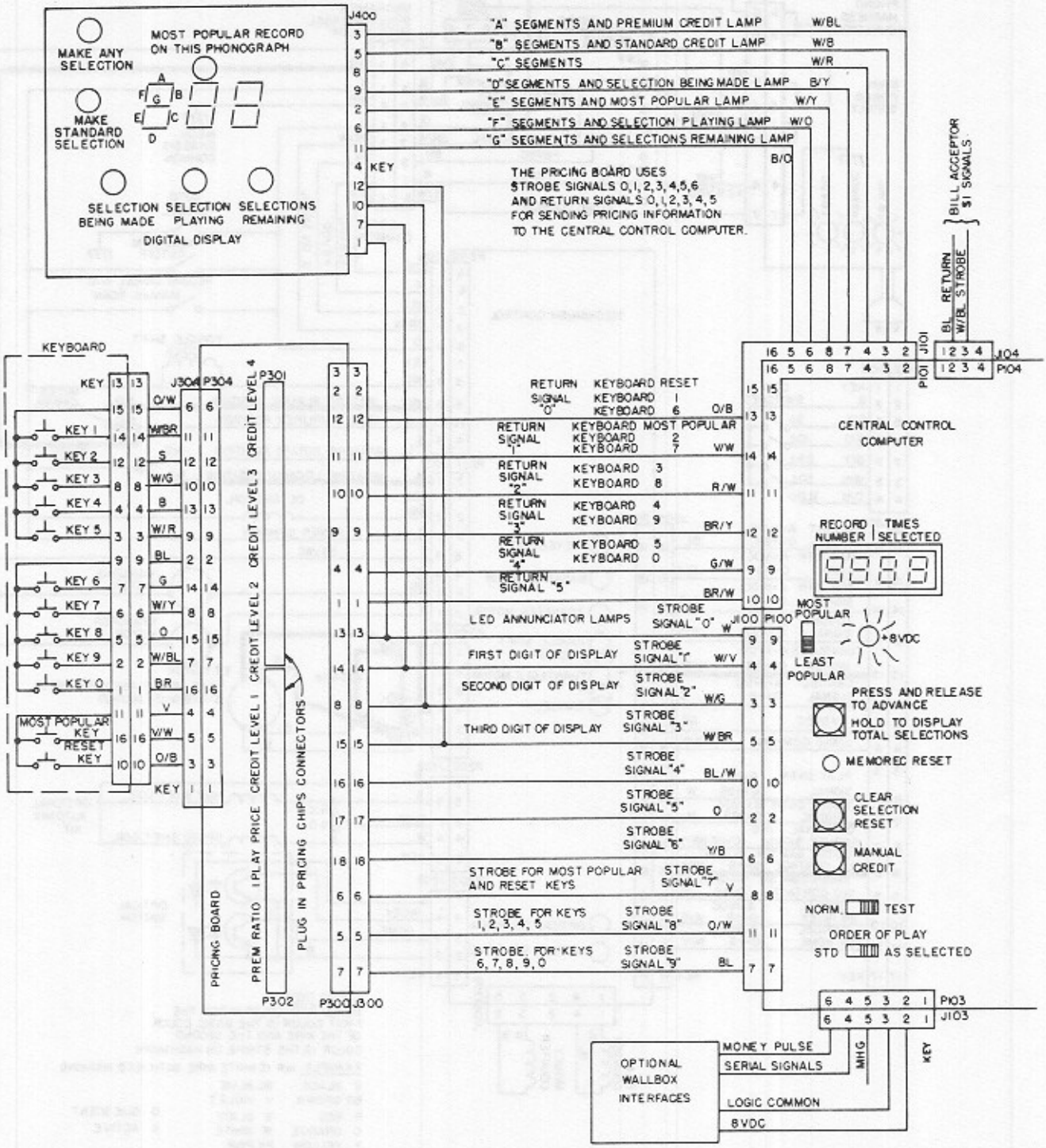

(13)

Record ends and is returned to magazine.

1. Tone arm cutoff sends a cancel signal to C.C.C.
2. C.C.C. turns on "Tran. Motor" LED, causing mechanism control to energize transfer motor.
3. Gripper bow picks up record and returns it to magazine.

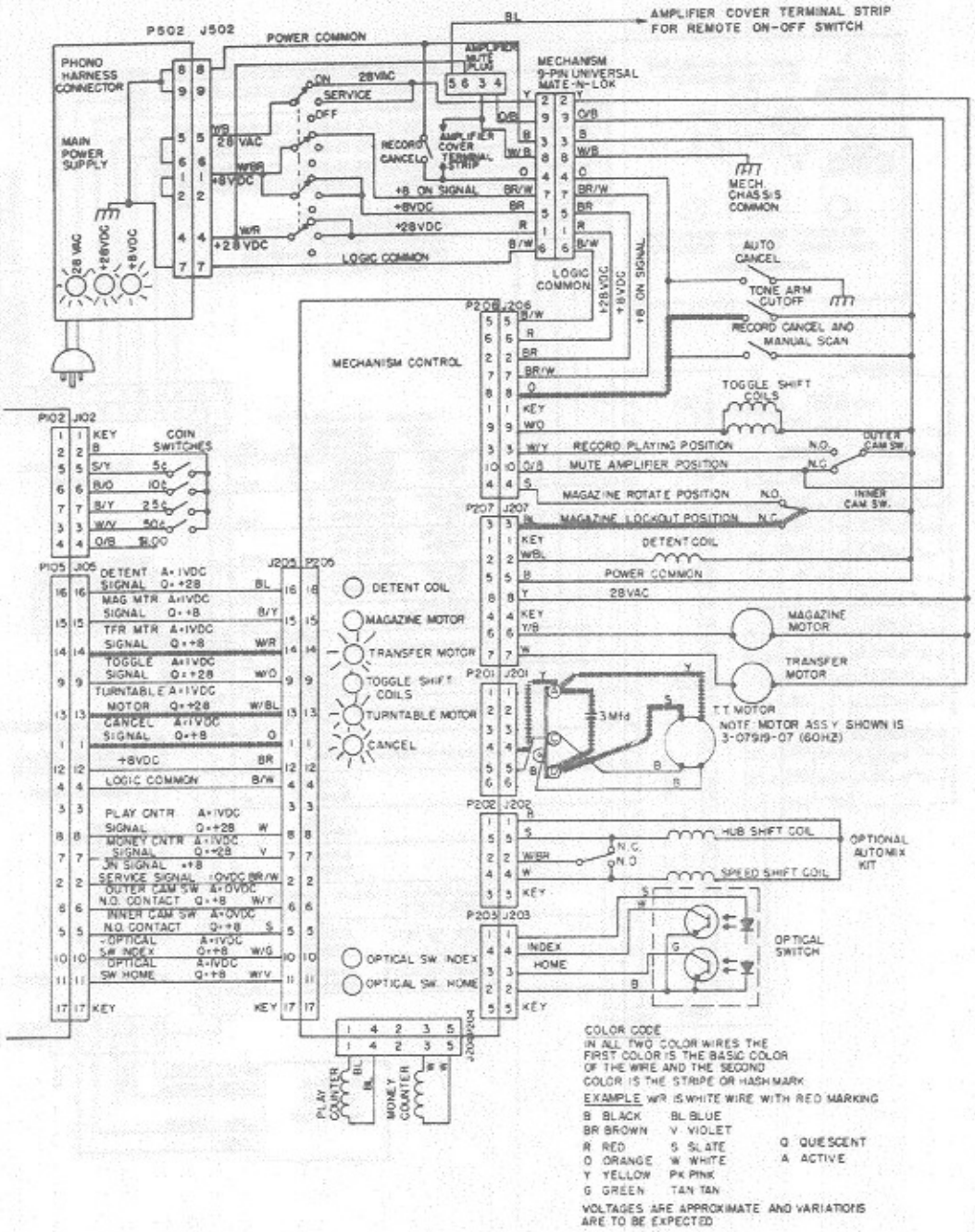
AMPLIFIER COVER TERMINAL STRIP FOR REMOTE ON-OFF SWITCH
P502 J502
POWER COMMON
PHONO HARNESS CONNECTOR
MAIN POWER SUPPLY
28 VAC
+28VDC
+8VDC
ON
SERVICE
OFF
28VAC
RECORD CANCEL
AMPLIFIER COVER TERMINAL STRIP
+8 ON SIGNAL
LOGIC COMMON
MECHANISM 9-PIN UNIVERSAL MATE-N-LOK
MECH. CHASSIS COMMON
AUTO CANCEL
TONE ARM CUTOFF
RECORD CANCEL AND MANUAL SCAN
TOGGLE SHIFT COILS
RECORD PLAYING POSITION
MUTE AMPLIFIER POSITION
MAGAZINE ROTATE POSITION
MAGAZINE LOCKOUT POSITION
OUTER CAM SW.
INNER CAM SW.
MECHANISM CONTROL
P202 J202
HUB SHIFT COIL
SPEED SHIFT COIL
OPTIONAL AUTOMIX KIT
P203 J203
INDEX
HOME
OPTICAL SWITCH
P102 J102
COIN SWITCHES
P105 J105
J205 P206
DETENT COIL
MAGAZINE MOTOR
TRANSFER MOTOR
TOGGLE SHIFT COILS
TURNTABLE MOTOR
CANCEL
OPTICAL SW. INDEX
OPTICAL SW. HOME
P201 J201
3Mfd
T.T. MOTOR
NOTE: MOTOR ASS'Y SHOWN IS 3-07919-07 (60HZ)
PLAY COUNTER
MONEY COUNTER
COLOR CODE
IN ALL TWO COLOR WIRES THE FIRST COLOR IS THE BASIC COLOR OF THE WIRE AND THE SECOND COLOR IS THE STRIPE OR HASH MARK
EXAMPLE W/R IS WHITE WIRE WITH RED MARKING
B BLACK
BR BROWN
R RED
O ORANGE
Y YELLOW
G GREEN
BL BLUE
V VIOLET
S SLATE
W WHITE
PK PINK
TAN TAN
Q QUIESCENT
A ACTIVE
VOLTAGES ARE APPROXIMATE AND VARIATIONS ARE TO BE EXPECTED

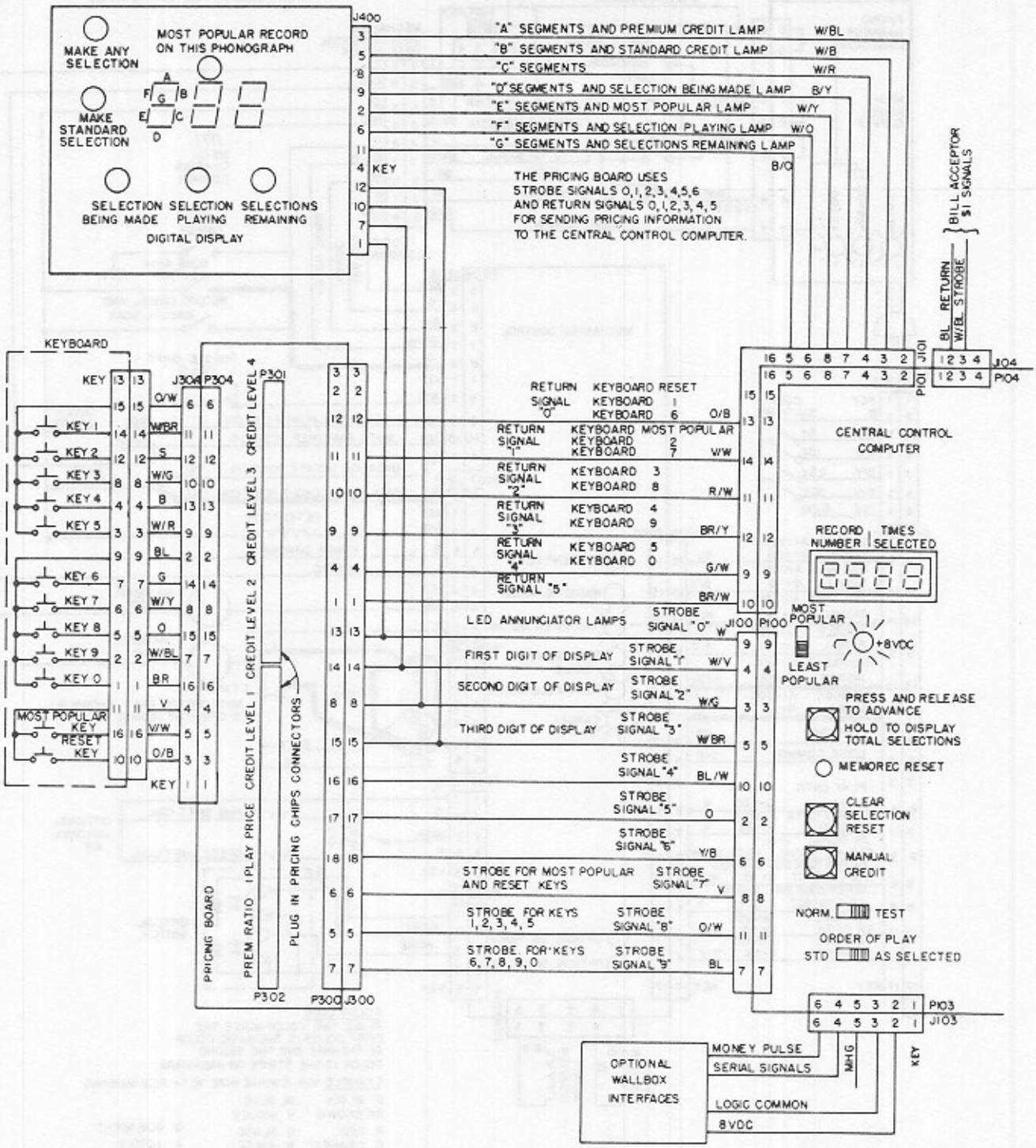

(14)

Transfer cycle ends, C.C.C. searches selection memory.

1. Cam rotates onto inner cam switch.
2. "Inner cam sw. N.O. contact" signals C.C.C. the transfer cycle is completed.
3. C.C.C. turns off "Trans. Motor" and "T.T. Motor" LEDs causing mechanism control to turn off these motors.

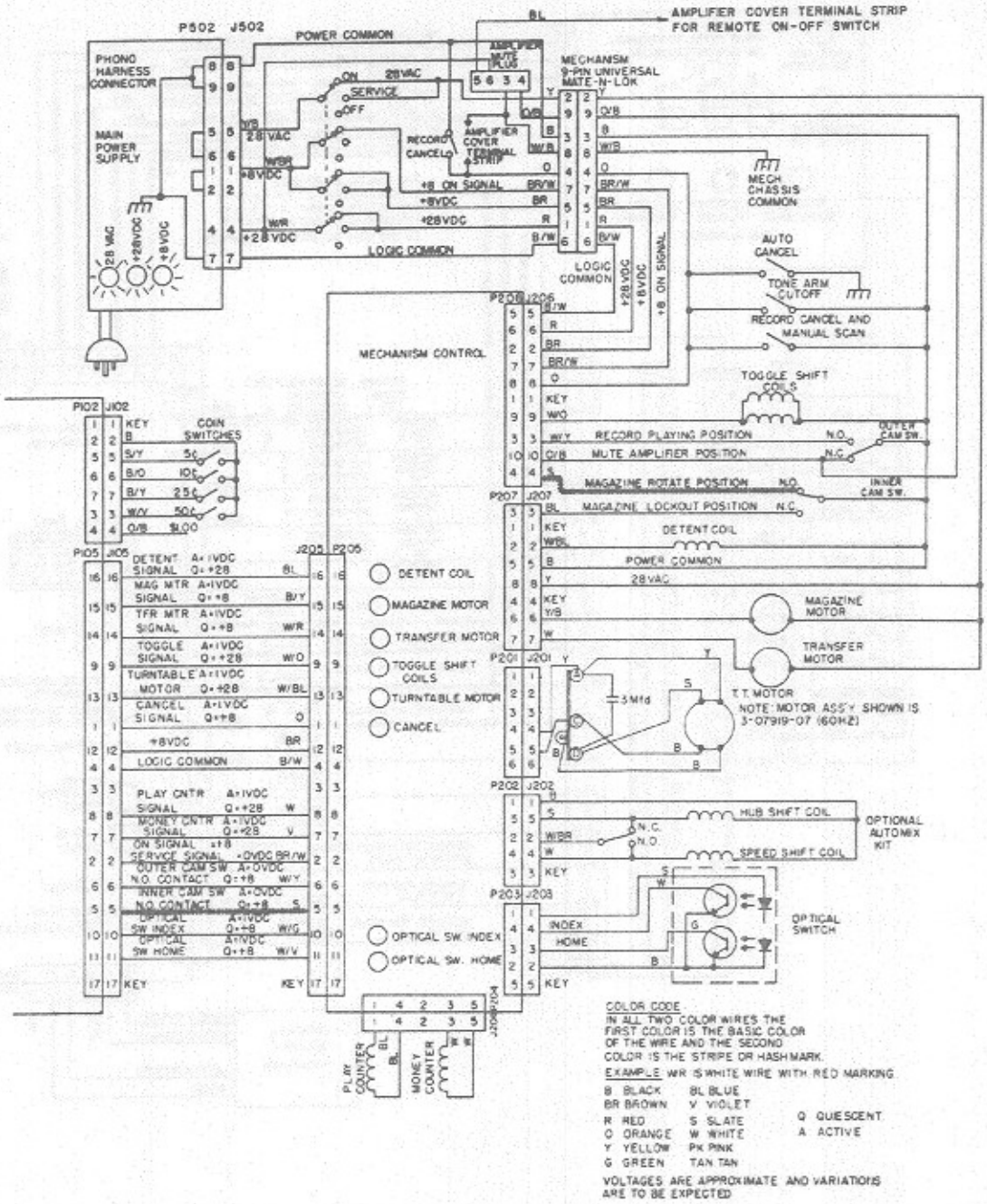

4. C.C.C. electronically searches its selection memory. If the memory contains one or more selections, sequences 8 thru 14 will be repeated.

5. If "order of play" switch is in as selected position, the selection will be located and played in the order they were selected.

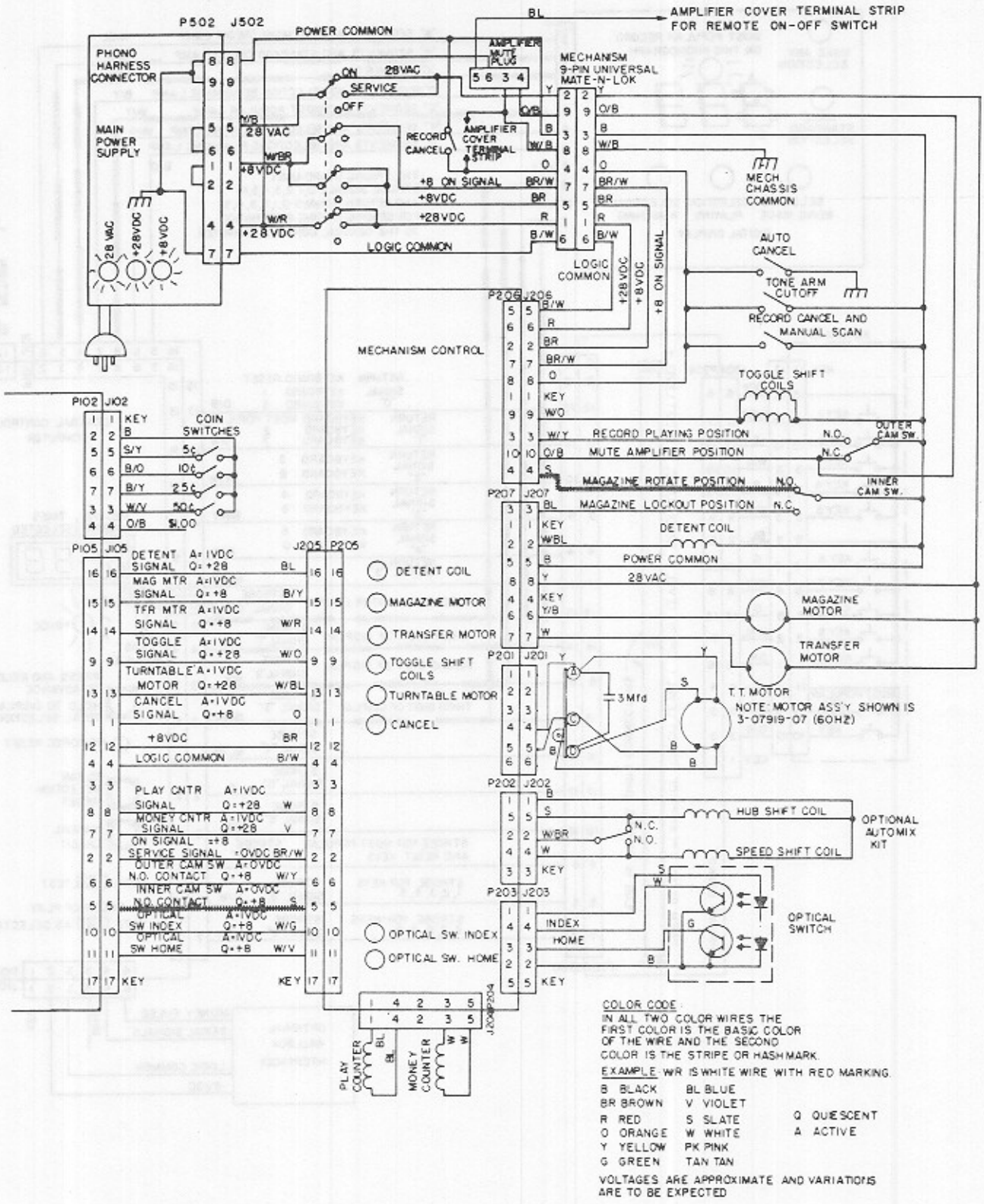

4. C.C.C. electronically searches its selection memory. If the memory contains one or more selections, sequences 8 thru 14 will be repeated.
5. If "order of play" switch is in as selected position, the selection will be located and played in the order they were selected.

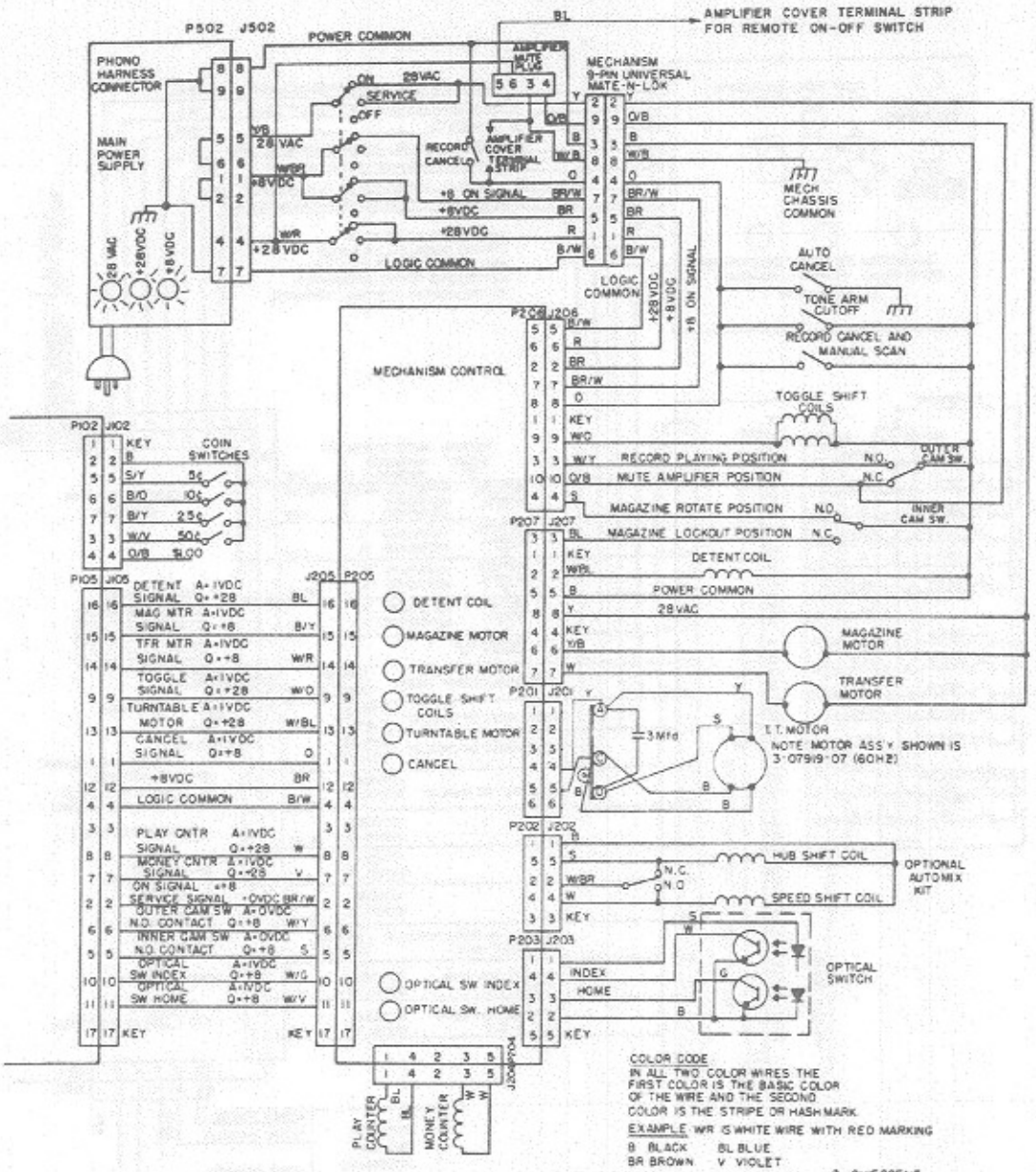
AMPLIFIER COVER TERMINAL STRIP FOR REMOTE ON-OFF SWITCH
P502 J502
POWER COMMON
PHONO HARNESS CONNECTOR
MAIN POWER SUPPLY
ON
SERVICE
OFF
28VAC
+8VDC
+28VDC
LOGIC COMMON
RECORD CANCEL
AMPLIFIER COVER TERMINAL STRIP
+8 ON SIGNAL
AMPLIFIER MUTE PLUG
MECHANISM 9-PIN UNIVERSAL MATE-N-LOK
MECH CHASSIS COMMON
AUTO CANCEL
TONE ARM CUTOFF
RECORD CANCEL AND MANUAL SCAN
TOGGLE SHIFT COILS
MECHANISM CONTROL
P206 J206
RECORD PLAYING POSITION
MUTE AMPLIFIER POSITION
MAGAZINE ROTATE POSITION
MAGAZINE LOCKOUT POSITION
OUTER CAM SW.
INNER CAM SW.
P102 J102
COIN SWITCHES
P105 J105
P205
DETENT COIL
MAGAZINE MOTOR
TRANSFER MOTOR
TOGGLE SHIFT COILS
TURNTABLE MOTOR
CANCEL
P207 J207
DETENT COIL
POWER COMMON
P201 J201
3 Mfd
T.T. MOTOR
NOTE MOTOR ASS'Y SHOWN IS 3-07919-07 (60HZ)
P202 J202
HUB SHIFT COIL
SPEED SHIFT COIL
OPTIONAL AUTOMIX KIT
P203 J203
OPTICAL SWITCH
OPTICAL SW. INDEX
OPTICAL SW. HOME
INDEX
HOME
J204 P204
PLAY COUNTER
MONEY COUNTER
COLOR CODE
IN ALL TWO COLOR WIRES THE FIRST COLOR IS THE BASIC COLOR OF THE WIRE AND THE SECOND COLOR IS THE STRIPE OR HASH MARK.
EXAMPLE: WR IS WHITE WIRE WITH RED MARKING
B BLACK
BR BROWN
R RED
O ORANGE
Y YELLOW
G GREEN
BL BLUE
V VIOLET
S SLATE
W WHITE
PK PINK
TAN TAN
Q QUIESCENT
A ACTIVE
VOLTAGES ARE APPROXIMATE AND VARIATIONS ARE TO BE EXPECTED

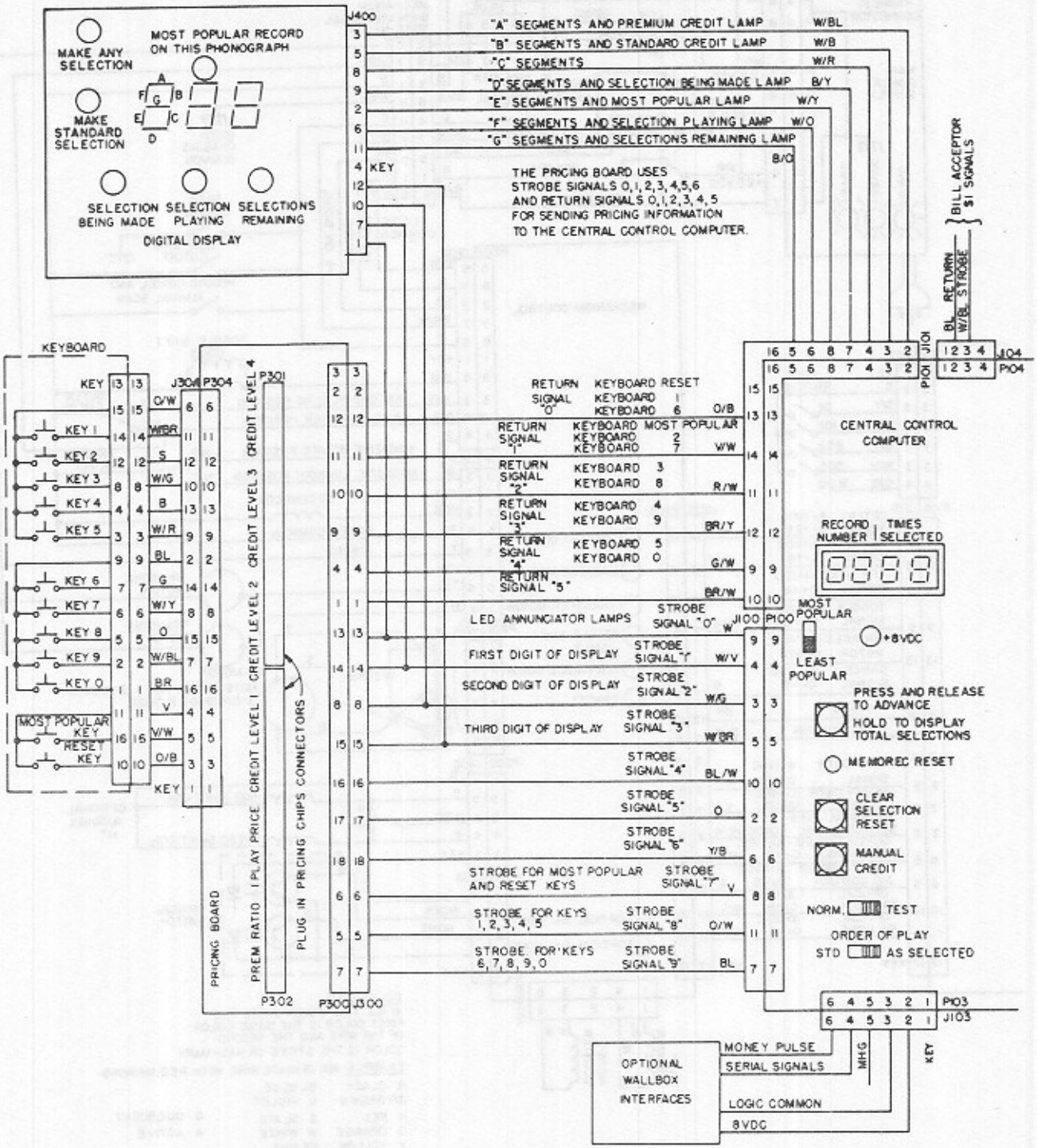
MAKE ANY SELECTION
MOST POPULAR RECORD ON THIS PHONOGRAPH
MAKE STANDARD SELECTION
SELECTION BEING MADE
SELECTION PLAYING
SELECTIONS REMAINING
DIGITAL DISPLAY
J400
"A" SEGMENTS AND PREMIUM CREDIT LAMP W/BL
"B" SEGMENTS AND STANDARD CREDIT LAMP W/B
"C" SEGMENTS W/R
"D" SEGMENTS AND SELECTION BEING MADE LAMP B/Y
"E" SEGMENTS AND MOST POPULAR LAMP W/Y
"F" SEGMENTS AND SELECTION PLAYING LAMP W/O
"G" SEGMENTS AND SELECTIONS REMAINING LAMP B/O
KEY
THE PRICING BOARD USES STROBE SIGNALS 0,1,2,3,4,5,6 AND RETURN SIGNALS 0,1,2,3,4,5 FOR SENDING PRICING INFORMATION TO THE CENTRAL CONTROL COMPUTER.
BILL ACCEPTOR $1 SIGNALS
BL RETURN
W/BL STROBE
J101
P101
J104
P104
KEYBOARD
KEY
J304
P304
P301
CREDIT LEVEL 4
CREDIT LEVEL 3
CREDIT LEVEL 2
CREDIT LEVEL 1
PLAY PRICE
PREM RATIO
PRICING BOARD
PLUG IN PRICING CHIPS CONNECTORS
P302
P300
J300
KEY 1
KEY 2
KEY 3
KEY 4
KEY 5
KEY 6
KEY 7
KEY 8
KEY 9
KEY 0
MOST POPULAR KEY
RESET KEY
RETURN SIGNAL "0" KEYBOARD RESET
KEYBOARD 1
KEYBOARD 6 O/B
RETURN SIGNAL "1" KEYBOARD MOST POPULAR
KEYBOARD 2
KEYBOARD 7 W/W
RETURN SIGNAL "2" KEYBOARD 3
KEYBOARD 8 R/W
RETURN SIGNAL "3" KEYBOARD 4
KEYBOARD 9 BR/Y
RETURN SIGNAL "4" KEYBOARD 5
KEYBOARD 0 G/W
RETURN SIGNAL "5" BR/W
LED ANNUNCIATOR LAMPS STROBE SIGNAL "0" W
FIRST DIGIT OF DISPLAY STROBE SIGNAL "1" W/V
SECOND DIGIT OF DISPLAY STROBE SIGNAL "2" W/G
THIRD DIGIT OF DISPLAY STROBE SIGNAL "3" W/BR
STROBE SIGNAL "4" BL/W
STROBE SIGNAL "5" O
STROBE SIGNAL "6" Y/B
STROBE FOR MOST POPULAR AND RESET KEYS STROBE SIGNAL "7" V
STROBE FOR KEYS 1,2,3,4,5 STROBE SIGNAL "8" O/W
STROBE FOR KEYS 6,7,8,9,0 STROBE SIGNAL "9" BL
CENTRAL CONTROL COMPUTER
J100
P100
RECORD NUMBER
TIMES SELECTED
MOST POPULAR
LEAST POPULAR
+8VDC
PRESS AND RELEASE TO ADVANCE
HOLD TO DISPLAY TOTAL SELECTIONS
MEMOREC RESET
CLEAR SELECTION RESET
MANUAL CREDIT
NORM. TEST
ORDER OF PLAY
STD AS SELECTED
P103
J103
OPTIONAL WALLBOX INTERFACES
MONEY PULSE
SERIAL SIGNALS
LOGIC COMMON
8VDC
MHG
KEY

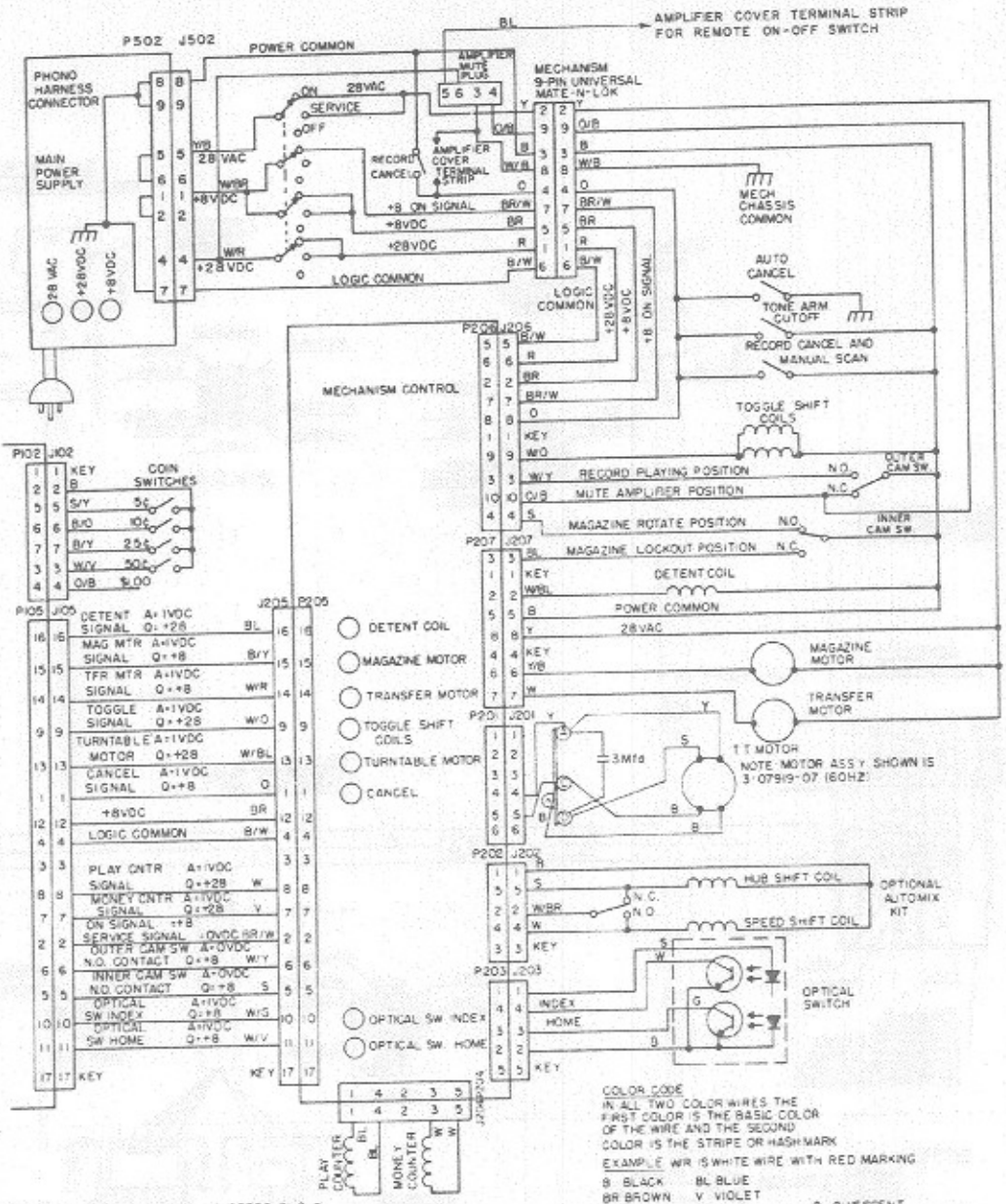

EQUIV. ENG'G DRWING 6-09300-01-Q-7

ROWE
R-86 PHONOGRAPH
BLOCK DIAGRAM

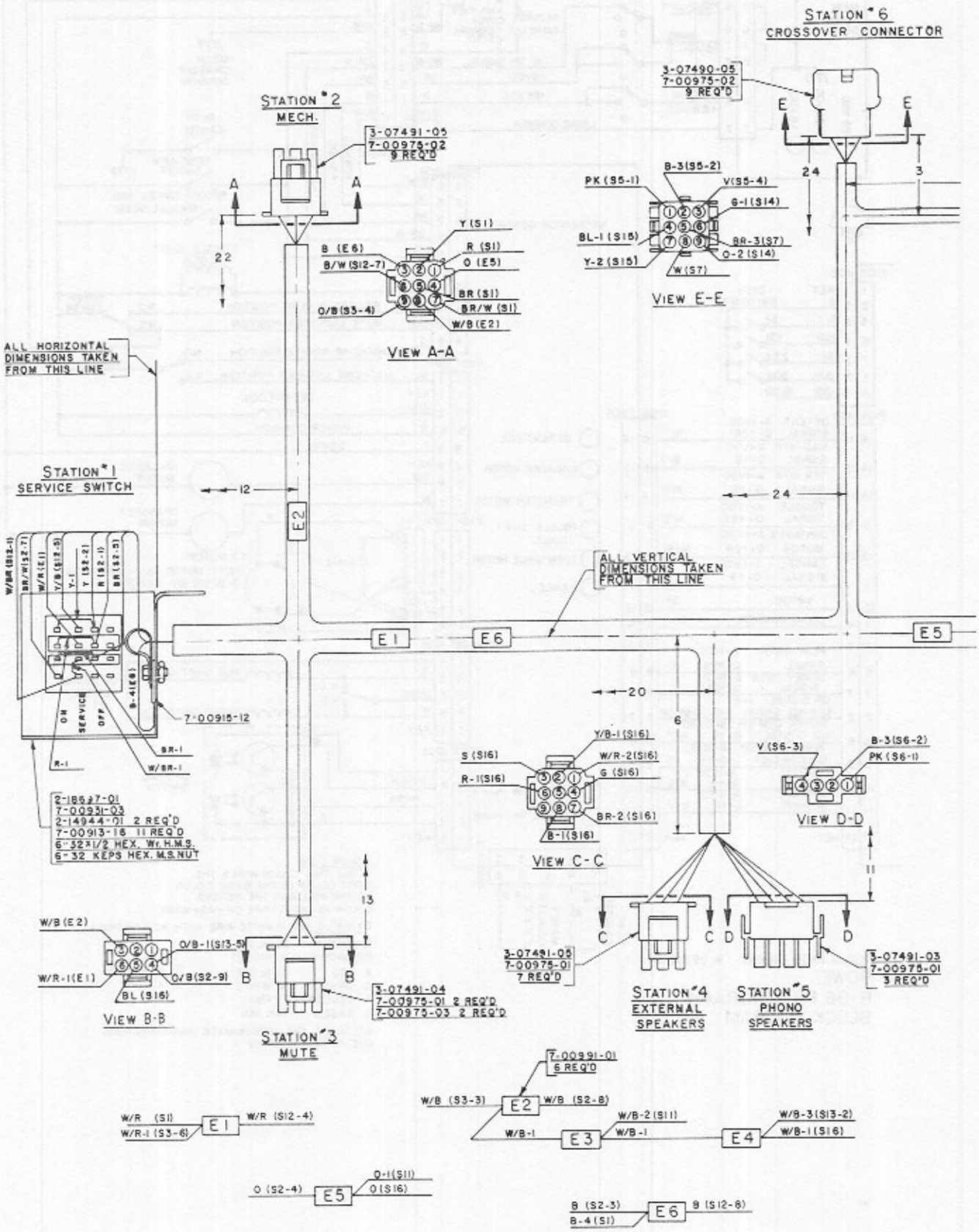
STATION #6
CROSSOVER CONNECTOR
3-07490-05
7-00975-02
9 REQ'D
STATION #2
MECH.
3-07491-05
7-00975-02
9 REQ'D
VIEW A-A
VIEW E-E
ALL HORIZONTAL DIMENSIONS TAKEN FROM THIS LINE
STATION #1
SERVICE SWITCH
ALL VERTICAL DIMENSIONS TAKEN FROM THIS LINE
7-00915-12
2-18623-01
7-00931-03
2-14944-01 2 REQ'D
7-00913-16 11 REQ'D
6-32x1/2 HEX. Wr. H.M.S.
6-32 KEPS HEX. M.S.NUT
VIEW C-C
VIEW D-D
VIEW B-B
STATION #3
MUTE
3-07491-04
7-00975-01 2 REQ'D
7-00975-03 2 REQ'D
3-07491-05
7-00975-01
7 REQ'D
STATION #4
EXTERNAL SPEAKERS
STATION #5
PHONO SPEAKERS
3-07491-03
7-00975-01
3 REQ'D
7-00991-01
6 REQ'D

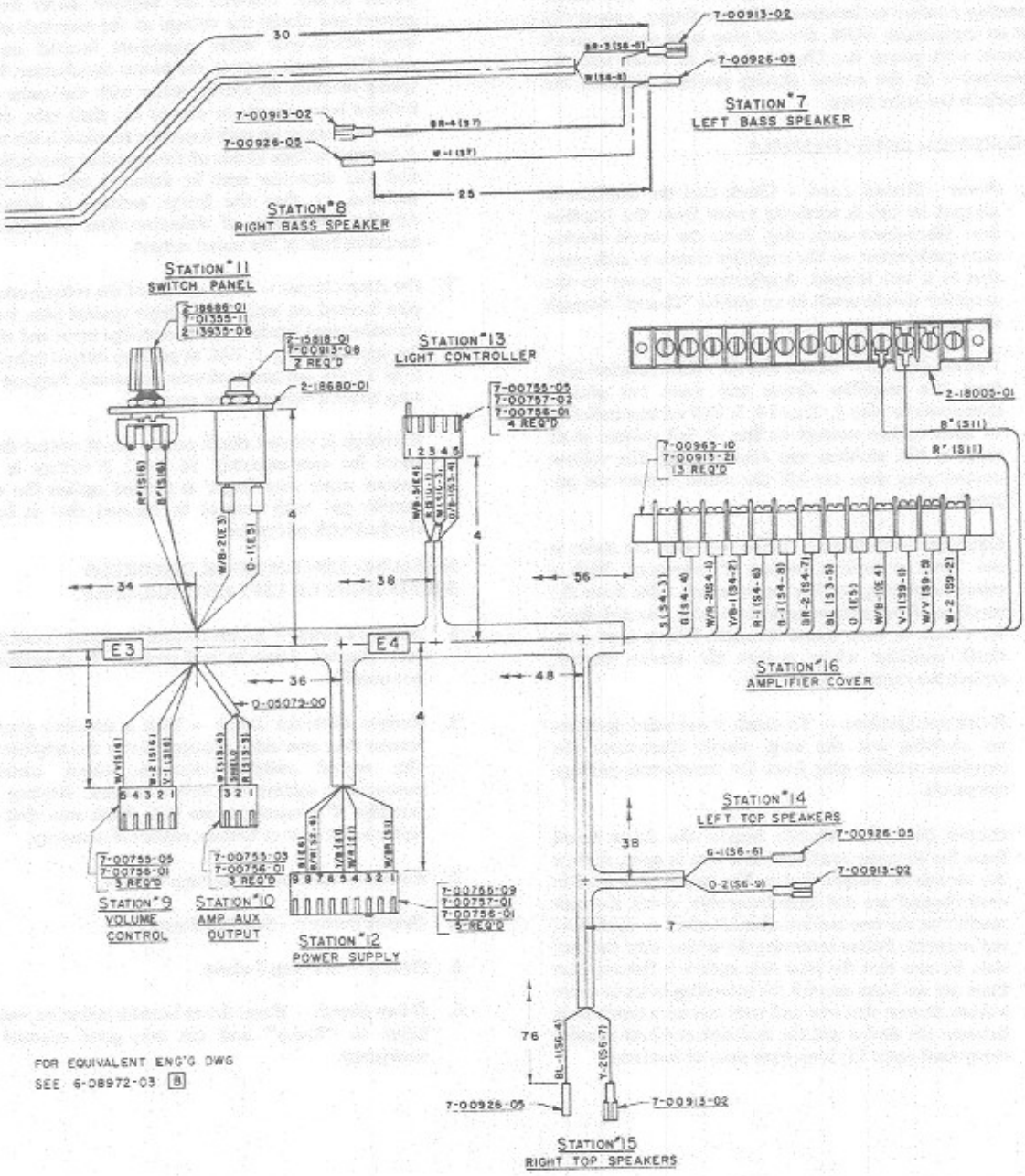

FOR EQUIVALENT ENG'G DWG
SEE 6-08972-03 B

R-86 WIRING DIAGRAM

SOUND SYSTEM QUICK CHECK

Rowe solid state sound systems are service designed for easy, fast repair. The following check list will enable locating troubles on location with your finger, a paper clip or an inexpensive VOM. Do not plug in or unplug circuit boards with power on. Checks should be made with the mechanism in the record playing position. Perform the checks in the order listed.

NO SOUND – BOTH CHANNELS

1. *Power - Second Level* – Check that the amplifier is plugged in and is receiving power from the junction box. Disconnect mute plug. Press the circuit breaker reset pushbutton on the amplifier chassis to make sure that is is not tripped. Application of power to the amplifier should result in an audible "thump" through the speaker.

2. *Volume Control* – Disconnect the volume control plug from the amplifier chassis and short out pins 3 (common) to pins 1, 2, and 4, 5. Full volume indicates an open volume control or line. If full volume at all times is the problem and disconnecting the volume control plug does not kill the sound replace the pre amp board.

3. *Cartridge Connections* – Make sure that the stylus is not bent or broken; replace if necessary. With a selection playing, unplug the tone arm cable from the amplifier. Press a finger against the plug pins and check for a hum in both sound channels. If hum is present, check cartridge wiring against the service manual; replace the cartridge if necessary.

4. *Extension Speakers* – To check if extension speakers are shorting out the amp, simply disconnect the extension speaker plug from the transformer package receptacle.

5. *Output Devices* – Visually inspect the driver board fuses for an open condition. If a fuse is open, replace the associated output device. The two devices used in each channel are not interchangeable; check the part number on the case and install an identical or equivalent replacement. Before mounting the device onto the heat sink, be sure that the heat sink surface is flat and that there are no burrs around the mounting holes to cause a short. Be sure that one and only one mica insulator is between the device and the heat sink and heat transfer compound (spec 53) is on both sides of insulator.

6. *Filter Capacitors* – Check for ± 2 VDC in the amplifier power supply. Connect the negative meter lead to ground and check the voltage at the terminals of the large electrolytic filter capacitors located on the amplifier chassis next to the power transformer. When taking readings on the capacitor with the outer shell isolated from chassis to one of the shell tabs, check that the voltage on each capacitor terminal is the same. A lowered voltage at one of the capacitor pins indicates that the capacitor may be defective and should be replaced, or that the bridge rectifier is defective. Another indication of defective filter capacitors is excessive hum in the sound output.

7. *Pre Amp Output* – Short all five of the volume control pins located on amp. Press finger against pins 1 or 3 (outside pins) labeled phono cartridge input and check for approximately 1 VAC at pre amp output (pins 3 or 5 of 13 pin connector-chassis common). Replace pre amp board if voltage is not present.

   If voltage is present check center pin of output driver board for approximately 16 VAC. If voltage is not present make sure finger is pressed against the same outside pin with respect to channel that is being checked with volt meter.

NO SOUND, LOW SOUND OR DISTORTED SOUND RIGHT OR LEFT CHANNEL ONLY.

1. *Balance Control* – Adjust control for equal sound from each channel. Leave in mid position if adjustment is not possible.

2. *Reverse Cartridge Leads* – With a selection playing, reverse tone arm cable connections to the amplifier. If the sound switches channels, check cartridge connections against the service manual. Replace the cartridge if connections are O.K. Make sure that the stylus is not bent or broken; replace if necessary.

3. *Extension Speakers* – See Step 4 above.

4. *Output Devices* – See Step 5 above.

5. *Preamp* – See Step 7 above.

6. *Driver Boards* – If one driver board is defective, switch input to "Mono" and use one good channel in emergency.