Most - Often - Needed

1952 RADIO DIAGRAMS

and Servicing Information

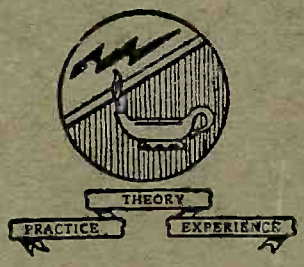

Compiled by

M. N. BEITMAN

SUPREME PUBLICATIONS

CHICAGO

VOLUME 12

PRICE $2.50

Most - Often - Needed

1952

RADIO DIAGRAMS

and Servicing Information

Compiled by

M. N. BEITMAN

SUPREME PUBLICATIONS
CHICAGO

Supreme Publications
RADIO AND TELEVISION BOOKS AND DIAGRAM MANUALS
3727 West 13th Street
Chicago 23, Illinois

August 1, 1952

A letter of Explanation
And Acknowledgement
From the Author-Compiler.

Dear Serviceman:

This new manual of "Most-Often-Needed 1952 Radio Diagrams" is Volume 12 of the popular Radio Series of Supreme Publications. Here you will find all needed material on servicing recent radio sets of AM and FM types, portables, auto radios, combinations, and record changers. Again you benefit with SUPREME tremendous volume-sales which permit such a low price for a whole year's supply of all needed radio servicing material.

The index for this Volume 12 begins on page 3. Use it to find the material you need. A new Master Index to all twelve radio manuals and all six TV volumes may be secured from your jobber or directly from Supreme Publications for only 25¢.

The exact factory service data presented in this manual is reprinted through the courtesy of various manufacturers represented. Our sincere thanks and appreciation is extended to these firms for their fine cooperation.

Very truly yours,
M. N. Beitman
SUPREME PUBLICATIONS

COPYRIGHT, 1952
By SUPREME PUBLICATIONS

All rights reserved, including the right to reproduce or quote the contents of this book, or any portion thereof, in any form.

MANUAL OF 1952 MOST-OFTEN-NEEDED RADIO DIAGRAMS

Index

Always use this Index to find needed material in this Volume 12, 1952 RADIO Diagram manual. You will find the various makes of radios listed in alphabetical order by manufacturer's name. Under each make, models or chassis are listed in numerical order at the left of the column, while the corresponding pages are listed to the right.

Admiral Corp.
- 5A3 7
- 5A32 7
- 5A33 7
- 5L2 9
- 5L21 9
- 5L22, 5L23 9
- 5M2 10
- 5M21, 5M22 10
- 5Y2, 5Y22 10
- 6C2 8
- 6C22, 6C23 8
- RC550 11-18
- RC550A, -GA 11

Andrea Radio
- P-163 27

Arvin Industries
- RE-292 19
- RE-297 20
- RE-306 20
- RE-307 22
- RE-308 21
- RE-310 23-24
- RE-313 23-24
- 551T 20
- 553 21
- 554CCB 20
- 554CCM 20
- 580TFM 23-24
- 582CFB 23-24
- 582CFM 23-24
- 650-P 19
- 657T 22

Capehart-Farnsworth
- 10 25
- 15 26
- CR-48 26
- C-312 25

Chevrolet
- 986516 28

Coronado, see Gamble-Skogmo

Crosley Corp.
- 10-135 29
- 10-136E 29
- 10-137 29
- 10-138 29
- 10-139 29
- 10-140 29
- 15-20E 30
- E15BE 30
- E15CE 30
- E15SL 30
- E15TN 30
- E15WE 30
- E20GN 30
- E20GY 30
- E20MN 30
- E20TN 30
- 30E 31-32
- 30E-1 31-32
- E30BE 31-32
- E30GN 31-32
- E30MN 31-32
- E30TN 31-32
- 285, 285-1 29

Delco
- 986516 28

DeWald Radio Mfg.
- DE-517A 33
- F-523 34

Emerson Radio
- 653B 35
- 691B 37
- 695B 36
- 702B 35
- 703B 38
- 704 39
- 706B 40
- 707B 40
- 710B 36
- 120097-B 38
- 120136-B 35
- 120145-B 37
- 120146-B 36
- 120154-B 39
- 120156-B 40

Espey Mfg. Co.
- 7-C 43
- 511 41-42
- 511-C 41-42

Esquire Radio
- 511 44

Fada Radio
- 777 46
- 790 48
- 845 45
- 855 47

Firestone Tire
- 4-A-86 49
- 4-A-92 50
- 4-A-95 49
- 4-A-101 51
- 4-A-102 51
- 4-C-19 51
- 4-C-20 51
- 4-C-21 52

Ford
- FAC-18805-A 90

Gamble-Skogmo
- 15RA2-43-8230A 54
- 15RA33-43-8365 53
- 94RA2-43-8230A 54

General-Electric
- 409 55-56
- 414 58
- 415 58
- 416 58
- 422 57
- 423 57
- 430 58
- 741 62
- 754 60-61
- 756 60-61
- 607 59
- 608 59

This Index is continued on the next three pages.

Hallicrafters
- 5R30A 63
- 5R31A 63
- 5R32A 63
- 5R33A 63
- 5R34A 63
- 5R50 64-65
- 5R51 64-65
- 5R52 64-65
- S-82 66

Masco
- 52,52C 105
- 52CR 105
- 52L 105
- 52LR 105
- 52R 105

Montgomery-Ward
- 15BR-1525D 67
- 15BR-1526D 67
- 15BR-1531D 67
- 15BR-1532D 67
- 15BR-1548A 68
- 15BR-1549A 68
- 15GCB-1583 68
- 15GCB-1584 68
- 15GHM-1067A 69
- 15GHM-1070A 70
- 15GHM-1552A 71
- 15GSE-1068A 72
- 15GSE-1595A 73
- 15GSE-2764A 74
- 15GSL-1564A 75
- 15GSL-1564B 75
- 15GSL-1565A 75
- 15GSL-1565B 75
- 15GSL-1566A 75
- 15GSL-1566B 75
- 15GSL-1567A 75
- 15GSL-1567B 75
- 25BR-1548B 68
- 25BR-1549B 68
- 25GAA-934B 76
- 25GSE-1555A 73
- 25GSE-1556A 73
- 25WG-1570B 77
- 25WG-1570C 77
- 25WG-1571B 77
- 25WG-1572B 77

Motorola, Inc.
- WS1C 88
- 2A 91
- 2M 92
- 2MF (Ford) 90
- BK2A 91
- BK2M 92
- BT-2 93
- CT2A 91
- CT2M 92
- GMT2A 91
- GMT2M 92
- HJ2A 91
- HJ2M 92
- HN2A 91
- HN2M 92
- KR2A 91
- KR2M 92
- NH2AC 89
- OE2A 91
- OE2M 92
- PC2A 91
- PC2M 92
- PD2A 91
- PD2M 92
- SR2A 91
- SR2M 92
- WS2C 88
- P6-2 94
- 7XM21 79-80
- 7XM22 79-80
- P8-2 94
- 42B1 81
- 52B1U 82
- 52C6 84
- 52C7 84
- 52C8 84
- 52H11U 85
- 52H12U 85
- 52H13U 85
- 52H14U 85
- 52R11A, -U 87
- 52R12A, -U 87
- 52R13A, -U 87
- 52R14A, -U 87
- 52R15A, -U 87
- 52R16A, -U 87
- 52X11U 85
- 52X12U 85
- 52X13U 85

Motorola, cont.
- 62L1U 83
- 62L2U 83
- 62L3U 83
- 62X11U 86
- 62X12U 86
- 62X13U 86
- 72XM21 79-80
- AC-152 (Nash) 89
- HS-218 79-80
- HS-303 79-80
- HS-305 82
- HS-306 81
- HS-308 83
- HS-310 84
- HS-312 85
- HS-313 85
- HS-314 86
- HS-315 87
- HS-317 87
- 702 94
- 802 94
- FAC-18805-A 90

Nash
- AC-152 89

Philco Corp.
- 52-540, -I 95
- 52-541 95-96
- 52-541-I 95-96
- 52-542-I 95-96
- 52-543 98
- 52-544 97
- 52-544-I,-W 97
- 52-545 98
- 52-547 98
- 52-548 99
- 52-550 98
- 52-640 100
- 52-641 100
- 52-643 101
- 52-940 102
- 52-941 102
- 52-942 102
- 52-944 103
- 52-1340 104

Privat-Ear Corp.
- DL-101 106

This Index is continued on the next two pages.

MANUAL OF 1952 MOST-OFTEN-NEEDED RADIO DIAGRAMS

R.C.A. Victor
- 1R81 107-110
- 1X51 112
- 1X52 112
- 1X53 112
- 1X54 112
- 1X55 112
- 1X56 112
- 1X57 112
- 1X591 111
- 1X592 111
- 2B400 113
- 2B401 113
- 2B402 113
- 2B403 113
- 2B404 113
- 2B405 113
- 2ES3 114
- 2ES38 114
- 2US7 114
- 45-EY-4 115
- 45-EY-26 115
- RS-138L 115
- RS-140 115
- RS-142 114
- PX600 116
- RC-1017A 114
- RC-1079K 111
- RC-1079L 111
- RC-1102 107
- RC-1102A 107
- RC-1102B 107
- RC-1102C 107
- RC-1104 112
- RC-1104-1 112
- RC-1104A 112
- RC-1104A-1 112
- RC-1104B 112
- RC-1104B-1 112
- RC-1104C 112
- RC-1104D 112
- RC-1104E 112
- RC-1110 116
- RC-1114 113

Sears, Roebuck
- 5 118
- 6 118
- 10 117
- 11 117
- 13 132
- 14 132
- 25 120

Sears, continued
- 27 120
- 1017 119
- 1032 121
- 1035, -A 121
- 1040 121
- 1045 121
- 1058 122
- 1059 122
- 1062 122
- 1063 122
- 101.860 122
- 132.881 118
- 132.896 117
- 478.238 120
- 478.239 132
- 528.194 121
- 528.195,-1 121
- 528.210 119

Silvertone, see Sears, Roebuck

Sentinel Radio
- 1U338I,R,W 123
- 338-I,R,W 123

Stewart-Warner
- 9160-A to -E 125
- 9161-A to -C 126
- 9162-A, -B 124
- 9164-A, -B 124

Stromberg-Carlson
- C-1 127

Tele-Tone Radio
- AH 131
- AZ 131
- BL 131
- BO 132
- 185 131
- 190 131
- 200 131
- 214 131
- 228 131
- 230 132

Trav-ler Radio
- 5170 133
- 5171 133
- 5172 134
- 5210 134

Truetone, see Western Auto

United Motors
- 986516 28

Vocaline Co.
- CC-1 128
- CC-2 128

Webster-Chicago
- 100 135-141
- 100-1 135
- 100-27 135
- 100-55 135
- 100-62 135
- 100-64 135
- 101 135-141
- 210 142

Sylvania Electric
- 1-601-1 130
- 1-602-1 129
- 511B,-H,-M 130
- 512BR 130
- 512CH 130
- 512GR 130
- 512RE 130
- 512YE 130
- 541B,-H,-M 129
- 542BR 129
- 542CH 129
- 542GR 129
- 542RE 129
- 542YE 129

Western Auto
- 4C11 147
- 4P12-A 146
- 25C23-11 148
- 237 143
- 325D27-202 144
- D-2108 143
- D-2109 143
- D-2216A,-B 68
- D-2217A,-B 68
- D-2237A 144
- D-2263 145
- D-3210A 146
- D-4118 147
- D-4142A 148
- 234031 145

This Index is continued on the next page, over.

MANUAL OF 1952 MOST-OFTEN-NEEDED RADIO DIAGRAMS

Westinghouse Elec.	
H-331P4U	152
H-333P4U	152
H-334T7UR	149
H-350T7	153
H-351T7	153
H-354C7	153
H-355T5	151
H-356T5	151
H-357C10	153
H-359T5	151
H-360T5	151
H-361T6	156
H-365T5	151
H-366T5	151
H-367T5	151
H-368P5	150
H-369P5	150
H-370T7	153
H-371T7	153
H-372P4	155
H-373P4	155
H-374T5	151
H-375T5	151
H-376P4	155
H-377	155
V-2136-5R	149

Westinghouse, cont.	
V-2156-1U	150
V-2157-5	151
V-2157-6	151
V-2157-7	151
V-2157-8	151
V-2157-9	151
V-2164U	152
V-2180-1	153
V-2180-2	153
V-2180-5	153
V-2180-7	153
V-2180-7S	153
V-2180-8	153
V-2181-1	156
V-2182-1	155

Zenith Radio Corp.	
4H40	158-159
4J40	162
5H41	160
5J03	163
5K02	167
6G05Z1	157
6J02	166

Zenith, continued	
6J03	165
6J05	164
7H02Z1	161
7H02Z2	161
7H04Z1	161
7H04Z2	161
7J03	161
7J20	168
H401	158-159
J402	162
H503	160
K510	167
K510W, -Y	167
J514	163
J615	164
H615Z1	157
J616	165
J664	166
J665E, -R	166
H723Z1	161
H723Z2	161
H724Z1	161
H724Z2	161
J733, -G	161
J733R, -Y	161
J2766	168

TELEVISION MANUALS

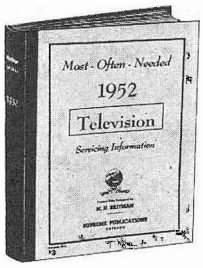

☐ *New* 1952 TV *Manual*

This new giant volume of 1952 television factory data will give you everything you need to repair and adjust all present-day TV sets. The **television series** manuals are amazing bargains and defy competition. The 1952 volume has circuit explanations, 192 pages of alignment facts, test patterns, response curves, waveforms, voltage charts, hints, and dozens of mammoth double-page work-bench diagrams. A virtual treatise on practical television repairs. Price postpaid, only..... **$3**

☐ **1951 TV** Another **Supreme** TV manual covering the year in which 8,000,000 television sets were made. Similar to the volume listed above, but covering all important sets of 1951. Double page diagrams. Large size, 192 pages, 8½x11 inches. Manual style binding. Amazing value at only..... **$3**

☐ **1950 TV** Manual includes service data on all popular makes from Admiral to Zenith. Large size plus 10 blueprints, 11x15 inches. Remarkable value. only..... **$3**

☐ **1949 TV** Giant volume of 1949 practical television factory data covers every popular set of every make. Gives description of circuits, pages of test patterns, response curves, alignment, waveforms. voltage charts, service hints, and many diagrams on extra large double-spread blueprints. Large size: 8½x11 inches, 192 pages, plus 9 blueprints 11x15 inches, manual style binding, flexible covers. Price, only..... **$3**

☐ **1948 TV** Manual similar to the volume above, but covering different popular sets. Includes 8 fold-out blueprints. Large size. Amazing **Supreme** value at only..... **$3**

☐ **1947 TV & F.M.** Covers popular F.M. and television sets of this period. Data on 192 pages, 8½x11 inches, sturdy binding. At your radio jobber or by mail..... **$2**

RADIO DIAGRAM MANUALS

DIAGRAMS FOR PREVIOUS YEARS

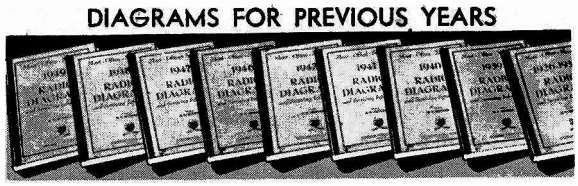

Speed up and simplify all radio repairs. Service radios faster, better, easier, save money and time, use these **SUPREME most-often-needed** diagram manuals to get ahead. At the low cost (only $2 for most volumes) you are assured of having for every job needed diagrams and other essential repair data on 4 out of 5 sets you will ever service. Clearly printed circuits, parts lists, alignment data, and helpful service hints are the facts you need. Average volume has 192 pages, large size 8½x11 inches. Manual style binding.

☐ 1951	☐ 1950	☐ 1949	☐ 1948	☐ 1947	☐ 1946
Volume 11	Volume 10	Volume 9	Volume 8	Volume 7	Volume 6
$2.50	$2.50	$2.50	$2.00	$2.00	$2.00

☐ 1942	☐ 1941	☐ 1940	☐ 1939	☐ 1926-1938
Volume 5	Volume 4	Volume 3	Volume 2	Volume 1
$2.00	$2.00	$2.00	$2.00	$2.50

NO-RISK TRIAL ORDER COUPON

SUPREME PUBLICATIONS, 3727 W. 13 St., Chicago 23, ILL.

Radio Diagram Manuals

☐ 1951 Radio
☐ 1950 Manual
☐ 1949 Radio
☐ 1948
☐ 1947
☐ 1946
☐ 1942
☐ 1941
☐ 1940
☐ 1939
RADIO MANUALS

EACH **$2.50** PRICED AT ONLY **$2** EACH

☐ 1926-1938 Manual, $2.50

Send **Radio** Manuals checked ☒ at left and **TV** Manuals below. Satisfaction guaranteed or money back.

☐ **1952 Television** Manual, $3. ☐ **1951 TV, $3.**
☐ **1950 Television** Manual, $3. ☐ **1949 TV, $3.**
☐ **1948 TV, $3.** ☐ **1947 TV & FM, only $2.**

☐ I am enclosing $..... Send postpaid.
☐ Send C.O.D. I am enclosing $... deposit.

Name: .....

Address: .....

Supreme Publications

3727 West 13th Street
CHICAGO 23, ILL.

MANUAL OF 1952 MOST-OFTEN-NEEDED RADIO DIAGRAMS

Admiral

CHASSIS 5A3
MODELS 5A32/12, 5A32/15, 5A32/16
5A33/12, 5A33/15, 5A33/16

ALIGNMENT PROCEDURE

- Turn receiver volume control full on (fully clockwise).
- Use an isolation transformer if available, otherwise connect a .1 mfd. condenser in series with low side of signal generator and connect to chassis.
- Connect output meter across speaker voice coil.
- Use lowest output setting of signal generator capable of producing adequate output meter indication and proceed in the following sequence.

Step	Dummy Antenna in Series with Signal Generator	Connection of Signal Generator (High Side)	Signal Generator Frequency	Receiver Gang Setting	Trimmer Description	Trimmer Designation	Type of Adjustment
1	250 mmfd. condenser	Antenna stator of tuning condenser	455 KC	Gang fully open	2nd IF 1st IF	*A, B *C, D	Maximum output
2	250 mmfd. condenser	Antenna stator of tuning condenser	1620 KC	Gang fully open	Oscillator	E	Maximum output
Mount and set dial pointer to horizontal position with tuning condenser tuned to 1400 KC generator signal; see illustration below.							
3	Loop of several turns of wire, or place generator lead close to receiver loop for adequate signal pickup.	No actual connection (signal by radiation)	1400 KC	Tune in generator signal	Antenna	F	Maximum output

*Adjustments A and C made from the underside of the chassis. If IF transformers have hollow core slugs, these adjustments may all be made from the top of the chassis, if you use alignment tool #98A30-7 obtainable from your Admiral distributor. The bottom IF slug adjustment may be reached through the hollow core in the upper slug.

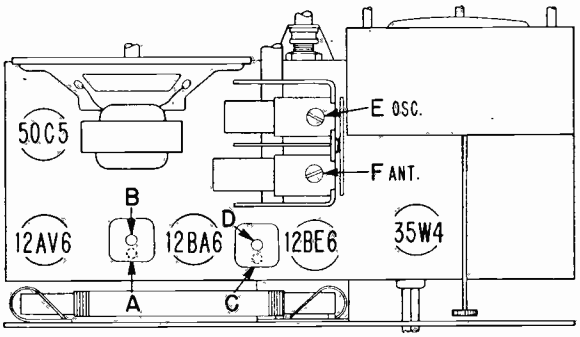

Adjustments A and C made from underside of chassis.

VOLTAGE DATA

Voltages shown on schematic diagram.

- All readings made between tube socket terminals and B minus (terminal of On-Off switch).
- Measured on 117 Volt AC line.
- Volume control minimum; dial turned to low frequency end.
- Voltages measured with Vacuum Tube Voltmeter.

C9 AND C10 TOTAL 250 MMFD. WHEN REPLACING WITH INDIVIDUAL COMPONENTS, USE ANY COMBINATION TOTALING 250 MMFD OR USE 250 MMFD ACROSS R6 IN PLACE OF C9 AND C10. R6 AND R7 CAN BE 470K.

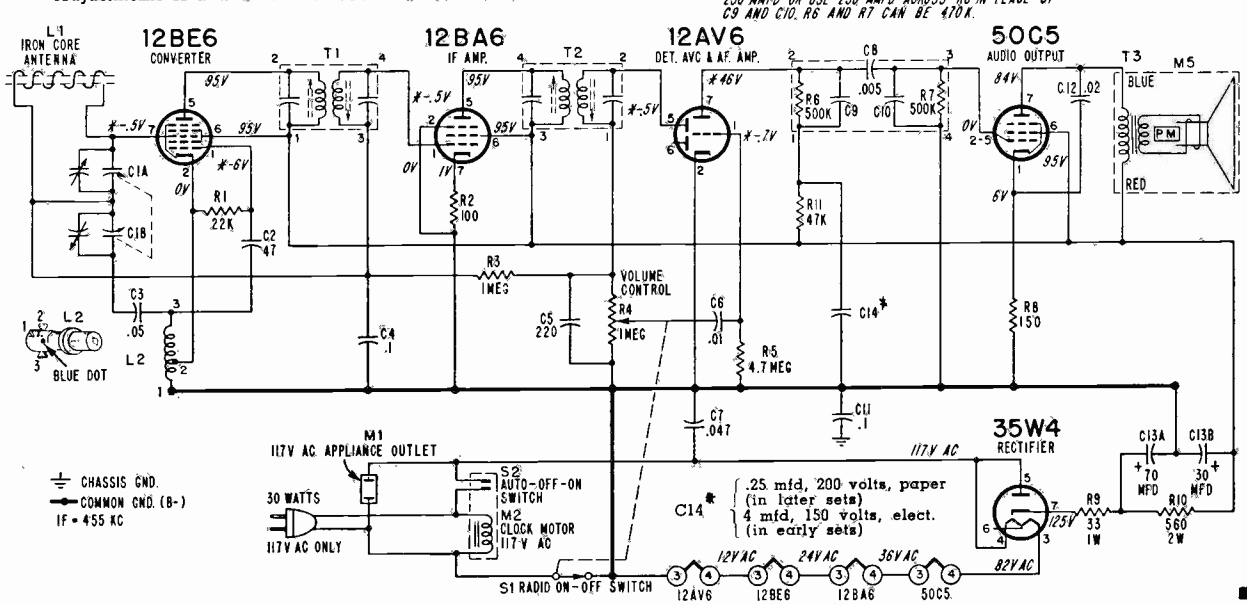

*These voltage readings will be either lower or practically zero if taken with a 1000 ohm-per-volt meter.

MANUAL OF 1952 MOST-OFTEN-NEEDED RADIO DIAGRAMS

Admiral

CHASSIS 6C2
MODELS 6C22, 6C23

TUBE AND TRIMMER LOCATION

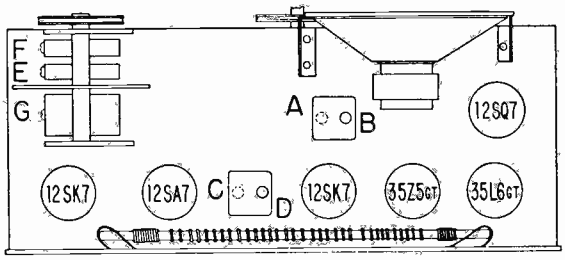

Adjustments A and C are made from underside of chassis.

POINTER SETTING AND DIAL CORD STRINGING

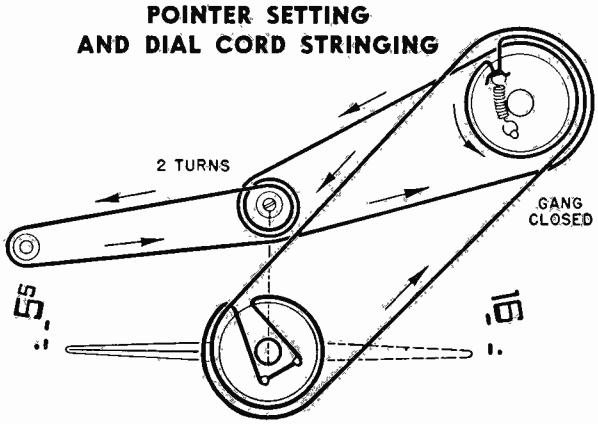

Before installing the chassis in the cabinet, fully close the gang condenser. Slide the chassis in the cabinet and mount the dial pointer in a horizontal position (pointed at the dot and dash below 55 on the radio dial scale).

ALIGNMENT PROCEDURE

- Turn receiver volume control full on.
- Connect output meter across speaker voice coil.
- Use lowest output setting of signal generator capable of producing adequate output meter indication and then proceed as outlined in chart below.

Step	Dummy Antenna in Series with Signal Generator	Connection of Signal Generator (High Side)	Signal Generator Frequency	Receiver Gang Setting	Trimmer Description	Trimmer Designation	Type of Adjustment
1	250 mmfd. condenser	Pin 8 of 12SA7 tube	455 KC	Gang fully open	2nd IF 1st IF	*A, B *C, D	Maximum Output
2	250 mmfd. condenser	Tuning condenser Antenna stator	1620 KC	Gang fully open	Oscillator (on gang)	E	Maximum Output
3	Loop of several turns of wire, or place generator lead close to receiver antenna for adequate signal pickup.	No actual connection (signal by radiation)	1400 KC	Tune in generator signal	RF (on gang)	F	Maximum Output
4	"	No actual connection (signal by radiation)	1400 KC	Tune in generator signal	Antenna (on gang)	G	Maximum Output

*Adjustments A and C are made from underside of chassis.

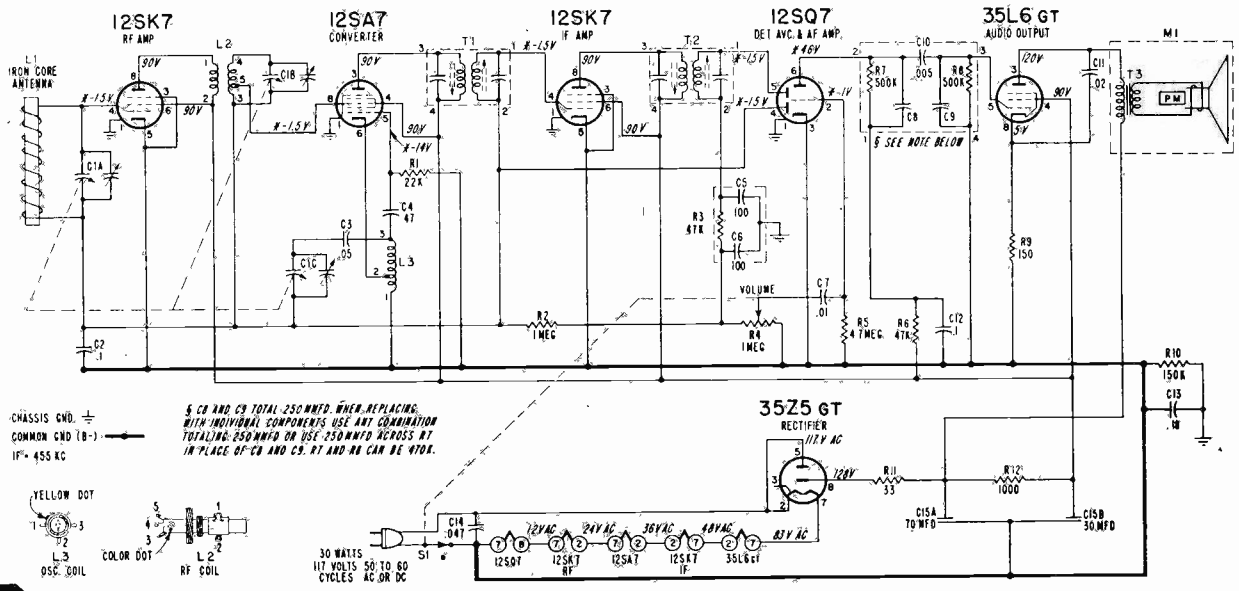

*These voltage readings will be either lower or practically zero if taken with a 1000 ohm-per-volt meter.

MANUAL OF 1952 MOST-OFTEN-NEEDED RADIO DIAGRAMS

Admiral

CHASSIS 5L2
MODELS 5L21, 5L22, 5L23

ALIGNMENT PROCEDURE

- Connect a wire jumper between contacts 1 and 4 on clock socket (M2) as shown in illustration below.
- Turn receiver volume control full on (fully clockwise).
- Use an isolation transformer if available, otherwise connect a .1 mfd. condenser in series with low side of signal generator and connect to chassis.
  Caution: Do not connect a ground wire directly to chassis.
- Connect output meter across speaker voice coil.
- Use lowest output setting of signal generator capable of producing adequate output meter indication and proceed in the following sequence.
- Repeat adjustments to insure good results.

Step	Dummy Antenna in Series with Signal Generator	Connection of Signal Generator (High Side)	Signal Generator Frequency	Receiver Gang Setting	Trimmer Description	Trimmer Designation	Type of Adjustment
1	250 mmfd. condenser	Antenna stator of tuning condenser	455 KC	Gang fully open	2nd IF 1st IF	*A, B *C, D	Maximum output
2	250 mmfd. condenser	Antenna stator of tuning condenser	1620 KC	Gang fully open	Oscillator	E	Maximum output
Mount and set dial pointer to horizontal position with tuning condenser tuned to 1400 KC generator signal; see illustration below.							
3	Loop of several turns of wire, or place generator lead close to receiver loop for adequate signal pickup.	No actual connection (signal by radiation)	1400 KC	Tune in generator signal	Antenna	F	Maximum output

*Adjustments A and C made from the underside of the chassis. If IF transformers have hollow core slugs, these adjustments may all be made from the top of the chassis, if you use alignment tool #98A30-7 obtainable from your Admiral distributor.

TUBE AND TRIMMER LOCATION

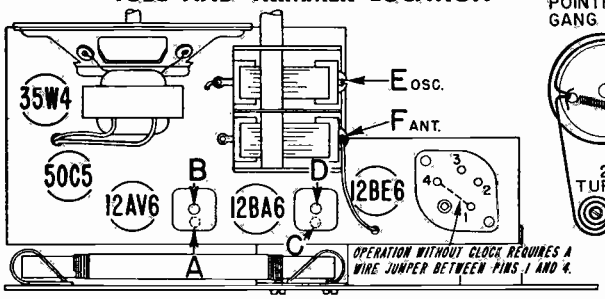

DIAL STRINGING

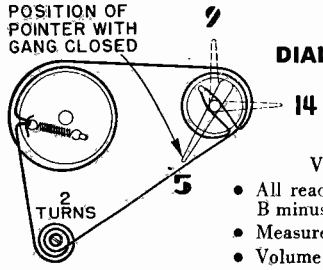

VOLTAGE DATA

Voltages shown on schematic diagram

- All readings made between tube socket terminals and B minus (negative lead of electrolytic condenser C13).
- Measured on 117 Volt 60 Cycle AC line.
- Volume control minimum; dial turned to low frequency end.
- Voltages measured with Vacuum Tube Voltmeter.

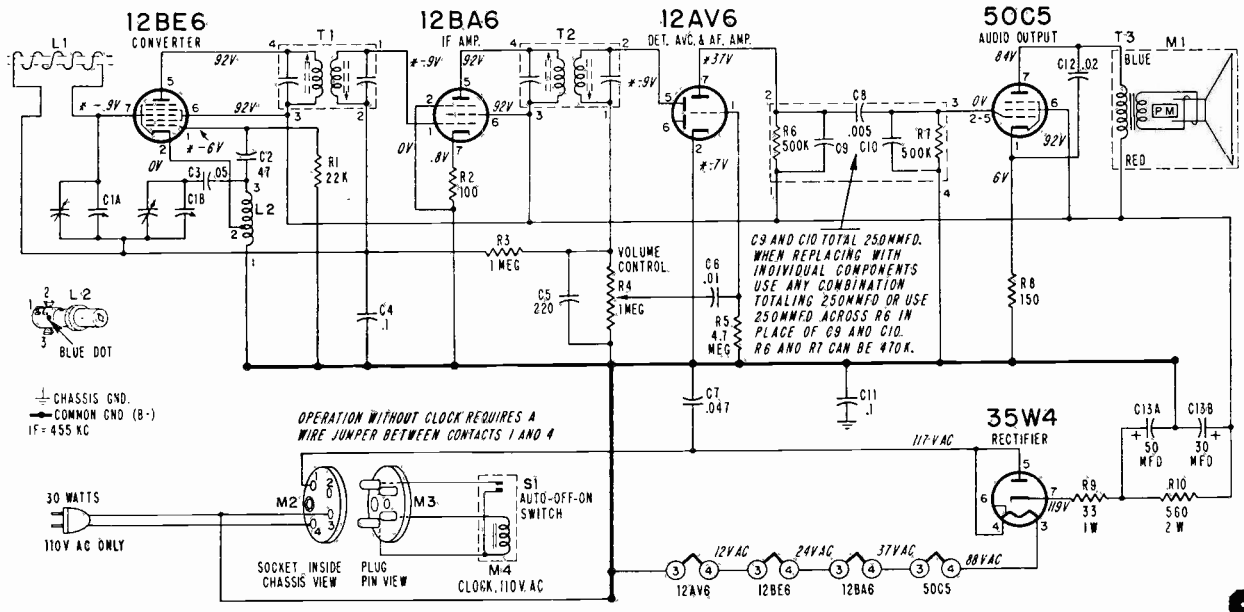

*These readings will be either lower or practically zero if taken with a 1000 ohm-per-volt meter.

MANUAL OF 1952 MOST-OFTEN-NEEDED RADIO DIAGRAMS

Admiral

CHASSIS 5M2, 5Y2
MODELS 5M21, 5M22, 5Y22

ALIGNMENT PROCEDURE

Step	Dummy Antenna in Series with Signal Generator	Connection of Signal Generator (High Side)	Signal Generator Frequency	Receiver Gang Setting	Trimmer Description	Trimmer Designation	Type of Adjustment
1	250 mmfd. condenser	Tuning condenser, antenna stator	455 KC	Gang fully open	2nd IF 1st IF	*A, B *C, D	Maximum output
2	250 mmfd. condenser	Tuning condenser, antenna stator	1620 KC	Gang fully open	Oscillator	E	Maximum output
Mount dial pointer. Set pointer to horizontal position with tuning condenser tuned to 1400 KC generator signal (see illustration below). Rotate the tuning condenser until the pointer is in a vertical position (900 KC), then slip chassis in cabinet, carefully guiding the pointer so that it locates between the dial escutcheon and the cabinet. Install antenna and chassis mounting bolts. The pointer and escutcheon may be mounted after installing the chassis in cabinet as follows: Set pointer to horizontal position with gang tuned to 1400 KC signal. Place escutcheon on cabinet. With long nose pliers slip the hairpin ends of the escutcheon mounting springs in holes of escutcheon tabs.							
3	Loop of several turns of wire, or place generator lead close to receiver antenna for adequate signal pickup.	No actual connection (signal by radiation)	1400 KC	Tune in generator signal	Antenna	†F	Maximum output

*Adjustments A and C made from the underside of the chassis. If IF transformers have hollow core slugs, these adjustments may all be made from the top of chassis, if you use alignment tool #98A30-7 obtainable from your Admiral distributor. The bottom IF slug adjustment may be reached through the hollow core in the upper slug.
† Antenna Trimmer "F" should be aligned after chassis and antenna are mounted in cabinet.

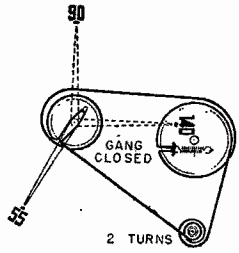

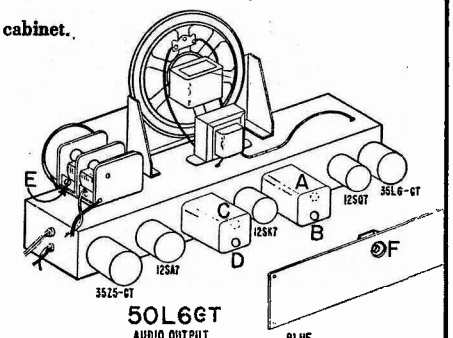

VOLTAGE DATA

Voltages given on schematic diagram.

- All readings made between tube socket terminals and B minus (terminal of On-Off switch).
- Switch S2 in "Radio" position.
- Measured on 117 Volt 60 Cycle AC line.
- Volume control minimum; dial turned to low end.
- Voltages measured with Vacuum Tube Voltmeter.

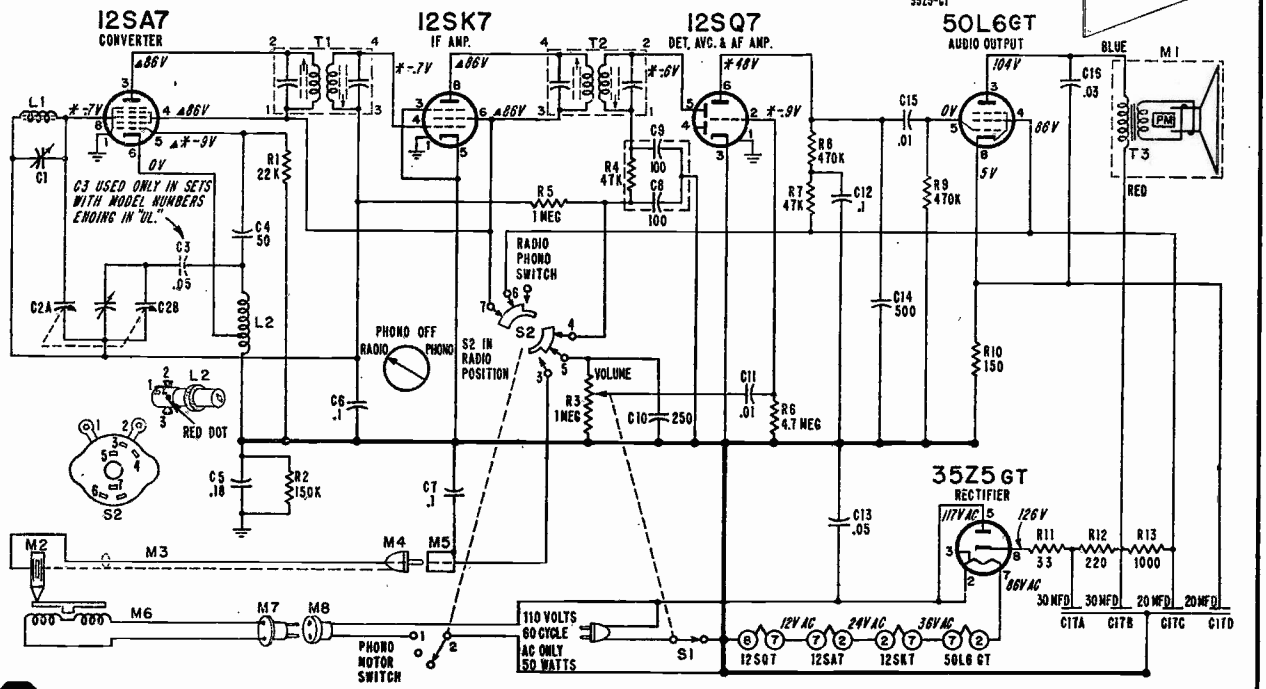

*These readings will be either lower or practically zero if taken with a 1000 ohm-per-volt meter.
▲ These readings will be zero on "Phono"; all other DC readings may be slightly higher.

Admiral

RC550, RC550A, RC550GA RECORD CHANGERS

Record Changers RC550, RC550A and RC550GA are identical, except for differences in length of connecting leads and color of plastic trim.

Record Changers RC550X and RC550AX are used in export sets.

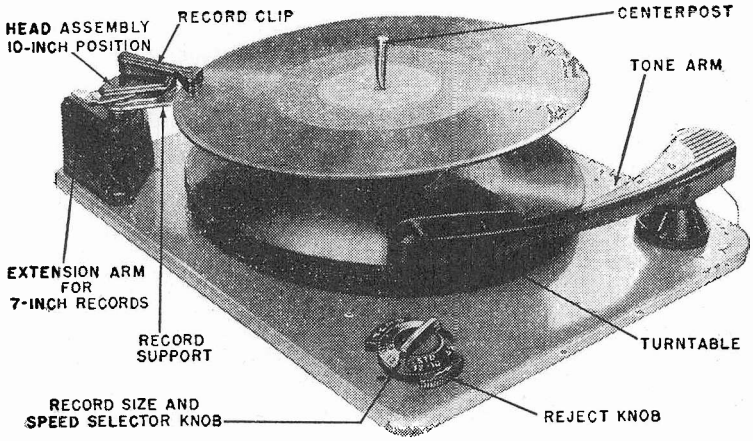

Figure 1. RC550 Record Changer, Top View.

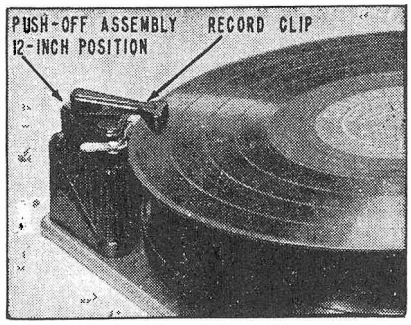

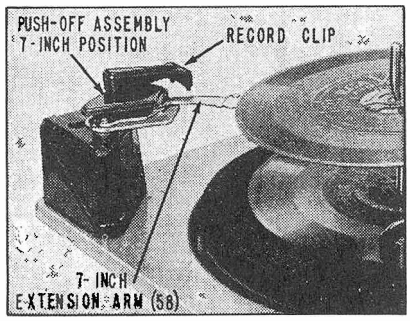

OPERATING INSTRUCTIONS

SETTING THE SIZE AND SPEED SELECTOR KNOB: The available record sizes (7, 10, 12) are engraved under the three different speeds (33, STD, 45) on this knob. Rotate the knob until the size of record to be played (under the proper speed), lines up with the indicating dot on the changer pan. (Note that no size number is engraved under "45" since only 7-inch 45 RPM records are available.)

SETTING PUSH-OFF ASSEMBLY: Pivot the Push-off assembly toward the centerpost to play 10-inch records and away from the centerpost to play 12-inch records. For 7-inch records, place the Push-off assembly in the 10-inch position and move the extension arm toward the centerpost.

LOADING AND STARTING: Place a stack of records over the centerpost so that they rest on the record support (64) and the centerpost offset. Records must be the same size and speed. If 10 or 12-inch records are being played, place the record clip on the stack.

The record changer is turned on by placing the function switch on the radio, in the "Phono" position.

REJECTING A RECORD: If the record changer will not trip into change cycle at the end of a record, or if you wish to stop playing a record and start playing the next one, merely rotate the reject knob to the left momentarily.

STOPPING AND UNLOADING: Do not turn the record changer off during change cycle. Turn the phono motor off by turning the function switch on the radio to the center position.

45 RPM ADAPTER: An adapter must be inserted into the center hole of the 45 RPM records in order to play them with this changer.

CHANGE CYCLE

If at all possible, we recommend that you carefully observe the change cycle of a record changer which is operating properly. It is a good idea to rotate the turntable by hand and repeat the change cycle until the function of each part is understood.

The changer operates as follows: The turntable is driven by the motor idler wheel (48), riding against its inside rim. The speed of the turntable is determined by the diameter of the drive shaft (either 78 RPM, 45 RPM, or 33 RPM) which rides against the idler wheel rubber tire (48).

The 78 RPM drive shaft is part of the motor armature. The 33 RPM drive shaft (44) and the 45 RPM drive shaft (45) are moved in and out of position mechanically by the motor shift link (84), which is controlled by the selector cam (89). See figure 4.

Material on Admiral RC500 Changer continued on pages 12 to 18.

Admiral RC500, RC500A, RC500GA Record Changers, continued.

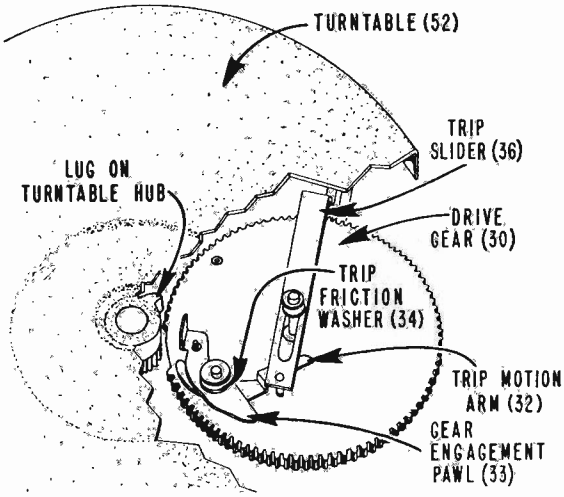

Figure 2A. Drive Gear Position Out of Change Cycle.

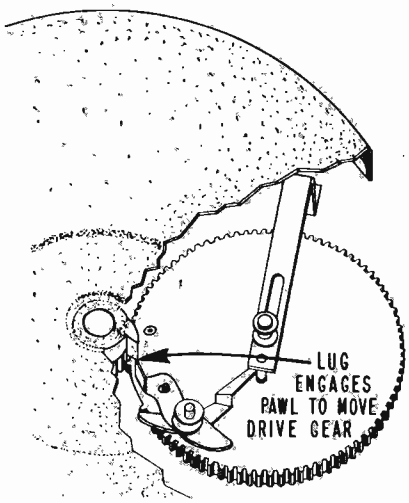

Figure 2B. Drive Gear Position During Change Cycle.

The changer mechanism is driven during its change cycle by the drive gear (30), which in turn is driven by the geared hub of the turntable. During normal record play, the "dead spot" on the drive gear is held next to the turntable hub by the gear indexing arm (41) and spring (39).

This changer employs a velocity trip, which consists primarily of two parts: the trip motion arm (32), and the gear engagement pawl (33). These parts are mounted near the "dead spot" on the drive gear. See Figure 2A.

During normal record play, the trip slider (36) is moved slowly by the stud on the arm control lever (23) which moves with the tone arm. The stud on the trip slider (36) rides against the trip motion arm (32), moving it very slightly. Since the gear engagement pawl (33) is held against the trip motion arm (32) by the trip friction washer (34), the gear engagement pawl (33) is also moved slightly toward the turntable hub. Since this movement is only slight, the vertical catch on the gear engagement pawl (33) is just touched and "kicked away" by the lug on the turntable hub. This occurs with each revolution of the turntable until the gear engagement pawl is moved in rapidly enough to be positioned in front of the lug before the next turntable cycle.

This rapid movement only occurs when the trip slider (36) is moved rapidly, by the tone arm, as the needle enters the trip grooves of the record. The gear engagement pawl (33) then moves in front of and engages the lug on the turntable hub. This causes the drive gear (30) to be rotated far enough so that the teeth on the drive gear will engage the teeth on the turntable hub, starting the change cycle. See figure 2B.

The changer can also be tripped by rotating the reject knob to the left momentarily. The stud on the end of the reject arm (88) moves the gear engagement pawl (33) into position to engage the lug on turntable hub.

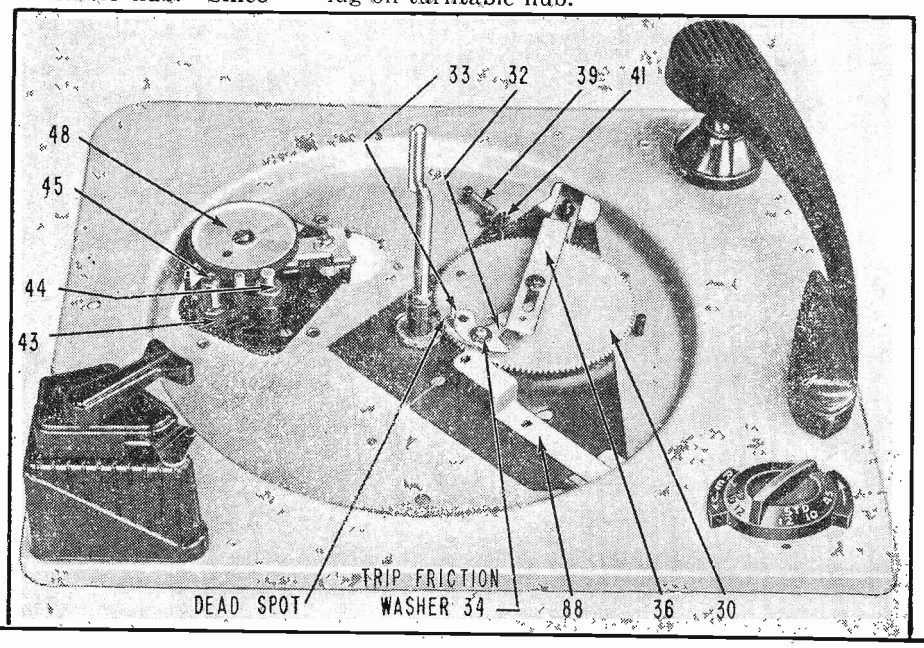

Fig. 3. RC550 Record Changer with Turntable Removed.

For Individual parts detail, see Figure 9, "RC550 Record Changer, Exploded View."

Admiral RC500, RC500A, RC500GA Record Changers, continued.

As the drive gear begins to rotate, the control cam (90) also rotates, since both parts are mounted on the same shaft. See fig. 4. As the control cam rotates clockwise, drive link roller (109) riding against the cam moves the drive link (107), which in turn rotates the control plate (102). As the control plate rotates, the incline tab (102A) rides across the tone arm lift rod (12), lifting the tone arm from the record. The stud on the arm control lever (23) then is engaged by the safety arm (105) (which rotates with the control plate), moving the tone arm away from the centerpost.

When the tone arm is almost clear of the record, the stud on the push-off link (86) (which is pivoted by the control cam), pivots the push-off arm (79) counterclockwise. Since the push-off arm is held to the push-off plate and shaft (60) by two Allen screws, the push-off plate is also pivoted. Just before the control cam reaches half rotation, the tone arm will be positioned as far as possible from the centerpost, and the push-off plate (60) will "push-off" the record to the turntable.

As the control cam (90) rotates through the second half of the change cycle, the push-off plate is returned by the push-off arm return spring (78) and the remainder of the stack of records drops to the record support (64). See figure 1.

At the same time, the tone arm is returned by the set-down spring (98) which causes the set-down indexing stud on the size change plate (99) to ride against the indexing portion of the arm control lever (23).

The tone arm will move toward the record until the set-down indexing stud on the size change plate has reached the indexing point (end of cut-away section) on the arm control lever. After the arm stops moving inward, the lift rod will ride down the control plate incline (102A), and the tone arm will move toward the record.

Just before the tone arm touches the record, the safety arm engages the stud on the set-down change plate (99) and pivots it away from the arm control lever (23); releasing the tone arm.

The set-down point is determined by the position of the set-down change plate (99), which can be set for either 7-inch, 10-inch, or 12-inch.

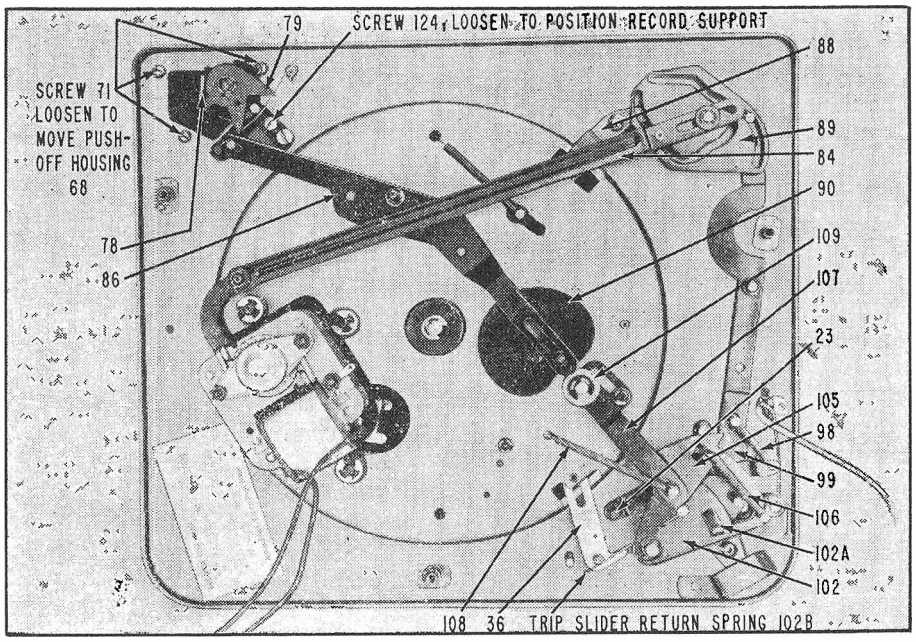

Fig. 4. RC550 Record Changer, Bottom View, Changer Out of Cycle.

ADJUSTMENTS

When making the following adjustments, keep in mind that the Push-off, Trip, and Set-Down mechanisms function independently. One of these units may become inoperative without affecting the other two.

VELOCITY TRIP MECHANISM

This record changer uses a velocity type trip, which depends upon a rapid movement of the tone arm toward the centerpost in any area between 2 7/8" to 7/8" from the center of the record. **This trip requires no adjustment.** However, in order for the changer to trip properly, there must be sufficient friction between the trip motion arm (32) and the gear engagement pawl (33). If the friction is lost, a small amount of lubricant (such as lubriplate #110) should be placed between these parts. If this does not help, it may be necessary to replace the trip friction washer (34). See Figure 2A.

SET-DOWN ADJUSTMENT

Adjustment of the set-down point, is made by adjusting the set-down adjusting screw (6). See Figure 5. **The tone arm will automatically set-**

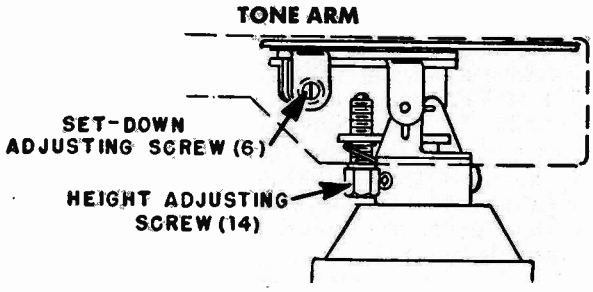

Figure 5. Set-Down and Height Adjustments.

down properly on 7-inch or 12-inch records if the set-down adjustment is made properly on a 10-inch record. The set-down adjusting screw is accessible through the hole in the right side of the tone arm. Turning this screw in moves the set-down point of the tone arm closer to the centerpost, and turning this screw out moves it away from the centerpost. Make this adjustment as follows:

1. Place the size and speed selector knob (26) in the "78-10" position.
2. Rotate the reject knob to the left momentarily. Then start to rotate the turntable clockwise by hand.
3. As the change cycle is almost completed, and the tone arm just starts to move down towards the turntable, place a ruler against the centerpost and check the distance between the near side of the centerpost and the needle. This distance should be between 4 10/16" and 4 11/16".
4. If the 10-inch adjustment is correct, the needle should set-down between 5 19/32" and 5 22/32" from the near side of the centerpost on 12-inch records, and between 3 1/4" to 3 5/32" on 7-inch records.

ADJUSTING THE TONE ARM HEIGHT

This record changer is so designed that the tone arm will clear the bottom record of a stack to be played if the needle is ¼" above the changer pan when the changer is not in change cycle and 1⅜" above the turntable during change cycle. See Figure 6. With proper tone arm height setting, the tone arm will lift high enough during change cycle to clear a complete stack of records of any type on the turntable. This stack may consist of as many records as specified on page 1. Make this adjustment by placing the size and speed selector knob (26) in the "78-10" position, check the distance between the needle and the changer pan with the changer out of change cycle. If the needle is more than ¼" above the pan, turn the lift adjustment screw (14, Figure 5) counterclockwise; if less, turn clockwise.

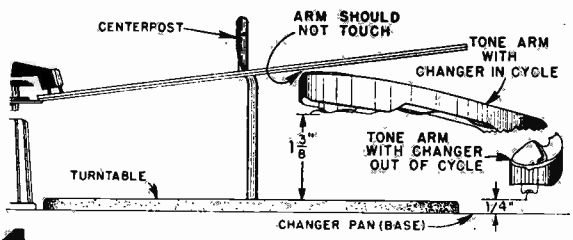

Figure 6. Checking Tone Arm Height.

POSITIONING RECORD SUPPORT (64)

If the record support is not positioned evenly under the bottom record of a stack to be played, one side of the record may drop to the turntable before the other. With the push-off assembly in the 10-inch position, place a 10-inch record over the upper portion of the centerpost so that the edge of the record fits against the edge of the record support (64). See figures 4 and 7. The contour of the record SHOULD follow the contour of the record support. If these contours do not match, position the push-off assembly as follows:

CAUTION: Be sure that the "testing" record has an even edge. For best results, try more than one record.

1. Loosen the screw (124) that holds the push-off positioning arm assembly (75) stationary.
2. Grip the push-off assembly and pivot it to the point where the edge of the record support "lines up" with the edge of the record.
3. Remove the record and tighten the screw (124).
4. Load the changer with a stack of 10-inch records, and "reject" the entire stack to the turntable. Check to see that all records drop to the turntable evenly.

ADJUSTING DISTANCE BETWEEN RECORD SUPPORT (64) AND CENTERPOST (24)

If records do not push-off satisfactorily, or more than one record drops to the turntable during change cycle, it may be necessary to adjust the distance between the centerpost and the record support. See Figures 4 and 8. Make this adjustment as follows:

1. Place the push-off assembly in the 10-inch position.
2. Hold the centerpost as far away from the push-off assembly as possible.
3. Measure the distance from the edge of the record support (64) to the inside edge of the offset shelf on the centerpost. This distance should be between 4 29/32" and 4 31/32".
4. If it is necessary to adjust for this distance, loosen the three screws (71) holding the plastic push-off housing (68) to the changer pan.
5. Tighten the three screws, and recheck the distance. Place a stack of records (any size) on the changer, and "reject" each record in the stack to the turntable. Check to see that each record is pushed off satisfactorily. If one side of the record drops to the turntable before the other, it may be necessary to make the "Positioning Record Support (64)" adjustment.

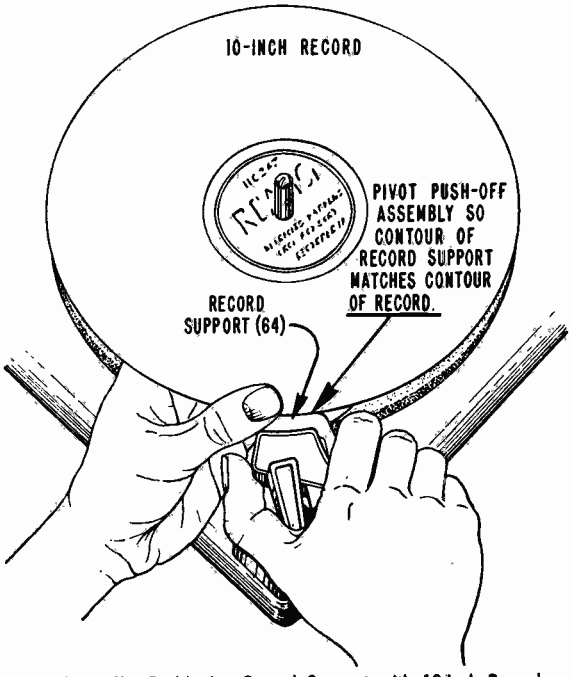

Figure 7. Positioning Record Support with 10-inch Record.

SERVICE AND REPAIR

LUBRICATION

DO NOT apply grease or oil to the trip slider (36). Also, under normal operating conditions, the motor should never require oiling.

Friction can sometimes be increased between the gear engagement pawl (33) and the trip motion arm (32), by placing a small amount of Lubriplate #110 between these two parts. Ordinary Vaseline can generally be used as a substitute for Lubriplate #110.

The rest of the changer should be lubricated with grease (such as Lubriplate #107) whenever it comes into the shop for repair or adjustment. A good automobile chassis grease can be used for this purpose. All pivot and friction points should be greased.

The powdered iron roller (109) and oilite bearings (used in the turntable hub and tone arm base) may be lubricated with SAE No. 20 oil.

REMOVING AND REPLACING TURNTABLE

To remove the turntable, first remove the turntable retaining clip (51). Be sure that the changer is not in change cycle, and then, grasp the turntable by its edges and lift up. Before replacing the turntable, make sure that the changer is not in change cycle. The pickup arm should be positioned away from the turntable. In replacing the turntable, force is not needed to seat it. Make certain, however, that the idler wheel of the motor has been pushed in towards the centerpost and that the idler wheel is making contact with the inner side of the turntable flange. The idler wheel should be pushed in with a screwdriver or similar flat tool. Do NOT push toward the rear of the changer.

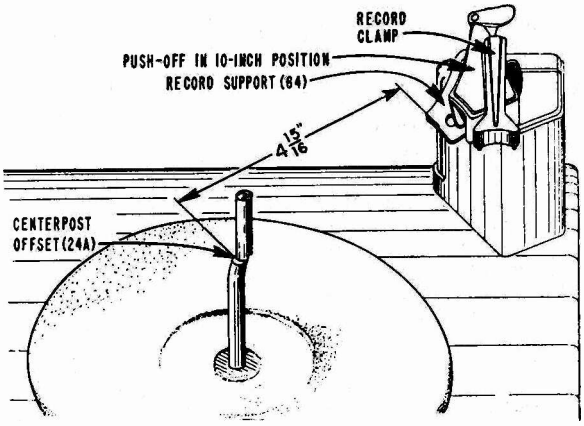

Figure 8. Checking Distance from Centerpost to Record Support.

REPLACING THE PUSH-OFF INDEX PLATE (77)

Position the push-off index plate (77) as shown in figure 10. Be sure that the Allen screw which is called out "falls into" the milled slot.

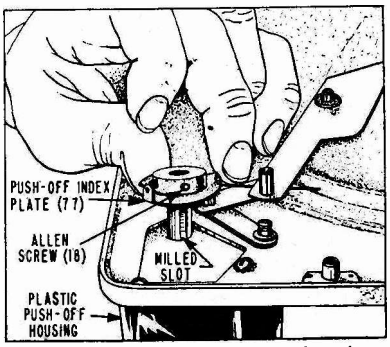

Figure 10. Installing Push-Off Index Plate.

REPLACING SELECTOR CAM (89)

When replacing the selector cam (89), place the size and speed selector knob (26) so "STD-10" lines up with the indicating dot, hold the selector cam in the position shown in Figure 4, and install.

REPLACING CONTROL CAM (90)

Before replacing the control cam (90), be sure that the changer is out of change cycle. Place the control cam in the position shown in Figure 4, and install.

REPLACING THE PUSH-OFF ARM (79)

Place push-off arm (79) over the push-off shaft so that the Allen screw which is called out below fits against the "flat section" of shaft.

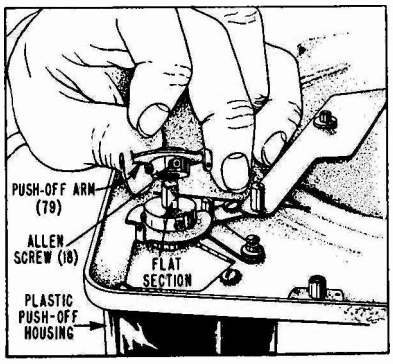

Figure 11. Installing Push-Off Arm.

MANUAL OF 1952 MOST-OFTEN-NEEDED RADIO DIAGRAMS

Admiral RC500, RC500A, RC500GA Record Changers, continued.

No.	Part No.	Description
1	403C51	Tone Arm (Maroon)
	403C51 G	Tone Arm (Gold)
2	409A13-1	Pickup Cartridge with needle (push-in type)
	409A13	Pickup Cartridge with needle and knurled nut
		Cartridges (with needle) are interchangeable
	98A54-2	Knurled Nut (for 409A13 Cartridge)
3	98A15-18	Needle for 409A13-1 Cartridge
	98A15-19	Needle for 409A13 Cartridge
4	1A72-1-20	Cartridge Mtg. Screw Shakeproof type 25 (2 req.)
5	G400A529	Tone Arm Lead and Pin Jack Assembly
6	45-750-C2-47	Set-Down Adjusting Screw, #4-40x¾ BH MS
7	405A137	Set-Down Adjusting Lock Spring
8	G400A526	Tone Arm Mtg. and Pivot Plate Assembly
9	2B10-5-59	Speed Nut (2 req.)
10	404A31	Tone Arm Counterweight
11	1A70-6-20	Counterweight Retaining Screws, #4 x ⅝" (2 req.)
12	G400A520	Lift Rod and Plate Assembly
13	405A120	Lift Adjusting Spring
14	402A245	Lift Adjusting Screw
15	414A43	Pivot Shaft
16	G400A525	Tone Arm Support and Hub (includes set screws)
17	1A43-14	Allen Set Screw, #8-32x3/16" (3 req.)
18	402A247	Allen Set Screw, #8-32x¼" (3 req.)
19	401A355-3	Retaining Ring
20	403A52	Tone Arm Plastic Base (Maroon)
	403A52 G	Tone Arm Plastic Base (Gold)
21	401A358	Spacer Washer
22	401A284	Bronze Washer (.316 x 15/32 x .005)
23	G400A542	Arm Control Lever and Shaft Assembly
24	G400B505-1	Centerpost
25	13A2-8-57	Snap-in Buttons
26	403A59	Size and Speed Selector Knob (Maroon)
	403A59G	Size and Speed Selector Knob (Gold)
27	G400A582	Reject Knob (Maroon)
	G400A582G	Reject Knob (God)
28	415A11	Thrust Bearing
29	401A355-1	Retaining Ring
30	G400A532	Drive Gear and Stud Assembly
31	402A229	Trip Pivot Stud
32	401A351-1	Trip Motion Arm
33	401A352	Gear Engagement Pawl
34	401A353	Trip Friction Washer
35	4B1-68-47	Washer (5 req.)
36	G400A575	Trip Slider
37	4B1-67-47	Washer (.196 x 5/16 x 1/32)
38	4B2-178-0	Washer (.196 x ⅜ x 1/64)
39	405A134	Gear Indexing Spring
40	405A22	Spring Washer
41	G400A549	Gear Indexing Arm and Stud Assembly
42	98A15-9	Oil Retaining Felt Washer (2 req.)
43	406A20	Drive Belt (2 req.)
44	98A15-11	45 RPM Drive Shaft (60 cycles)
45	98A15-10	33 RPM Drive Shaft (60 cycles)
46	405A15	Idler Wheel Retaining Clip
47	412A30	Fibre Washer (2 req.)
48	G400A279	Idler Wheel Assembly
49	98A15-21	Idler Wheel Tie Lug
50	98A15-20	Idler Wheel Spring
51	414A36	Turntable Retaining Clip
52	G400B507	Turntable
53	G400A511	Record Clamp and Shaft and Rubber Tips (Maroon)
	G400A511 G	Record Clamp and Shaft and Rubber Tips (Gold)
54	406A25	Record Clamp Rubber Tip (2 req.)
55	403B53	Push-off Plastic Cap (Maroon)
	403B53 G	Push-off Plastic Cap (Gold)
56	402A249	Push-off Plate Nut
57	401A326	7" Record Support Detent Spring
58	G400A510	7" Record Support
59	415A28-1	Ball Bearing (⅛" diameter)
60	G400A509	Push-off Plate and Shaft Assembly

Ref. No.	Part No.	Description
61	402A250	Spacer Washer
63	402A262	Screw, #4-40x5/16 BH MS (includes lockwasher)
64	G400A508	Record Support and Tube Assembly
65	1A72-2-20	Screw, Shakeproof type 25 (#4 x 5/16")
66	405A136	Record Clamp Spring
67	4B1-158-47	Washer (.390 x 9/10 x 1/32)
68	403C50	Push-off Housing (Maroon)
	403C50G	Push-off Housing (Gold)
69	401A346	Housing Bottom Plate
71	402A263	Plastiscrew, #6x5/8 R.H. (includes lock washer)
72	402A258	"Hold Down" Screw, #10-32 x 1¼" (for shipping only)
73	AA210	Mounting Screw and Washer (table models only)
74	405A139	Float Spring (3 req.)
75	G400A565	Push-off Positioning Arm Assembly
76	414A40	Push-off Indexing Spring
77	G400A514	Push-off Index Plate and Hub Assembly
		See "Replacing The Push-Off Index Plate (77)" on page 8.
78	405A133	Push-off Return Spring
79	G400A517	Push-off Arm and Hub Assembly (includes Allen screw)
		See "Replacing The Push-Off Arm (79)" on page 15.
80	*407B19	*3-Speed Motor Complete, 60 cycle, 117 volts
81	406A19	Motor Mounting Grommet (3 req.)
82	401A355-4	Motor Mtg. Retaining Ring (3 req.)
83	88A8-1	Phono Motor Plug
84	G400A580	Motor Shift Link (includes rubber grommet)
85	406A24	Speed Change Link Grommet
86	G400A562	Push-off Link and Stud Assembly
87	405A140	Reject Return Spring
88	G400A581	Reject Arm and Stud Assembly
89	401B359	Selector Cam, When replacing, see "Replacing Selector Cam (89)"
90	G400A548	Control Cam and Stud Assembly
		See "Replacing Control Cam (90)" on page 15.
91	401A145	Control Cam Washer
93	402A265	Screw, #8/32x⅜" BH (includes lock washer)
94	4B1-78-47	Washer (.196x½x1/16)
95	402A254	Selector Cam Stud
96	401A355-3	Centerpost Retaining Ring
97	G400A579	Set-Down Change Lever
98	405A130	Set-Down Spring
99	G400A546	Set-Down Change Plate and Arm Assembly
100	402A238	Spacer
101	1A70-11-20	Plastiscrew, # 6 x 7/16"
102	G400A537	Control Plate Assembly
103	401A173	Washer
104	401A355-2	Retaining Ring
105	401A345	Safety Arm
106	405A131	Safety Spring
107	G400A538	Drive Link and Stud Assembly
108	405A132	Control Plate Return Spring
109	415A27	Drive Link Roller
110	403A38-1	Plastic Trim (2 req.)
111	32A88	Antenna Lead Support
112	2B10-10-59	Speed Nut (4 req.)
113	27A24	Bottom Cover Bushing (4 req.)
114		Bottom cover
115	413A11-1	Shielded Cable (includes plug, 15")
116	88A2-3	Plug (for lead-in cable)
117	10B1-18	Terminal Board
118		Changer Pan
119	415A28-2	Ball Bearing (5/32 diameter)
120	412A36	Fibre Washer (.196 x ⅜" x .005)
121	414A45	Tone Arm Weight
122	4B1-19-47	Washer (.125 x ¼ x 1/32 Steel)
123	412A38	Motor Mounting Washer
124	402A264	Screw, #6-32 x 3/16" BH

PARTS FOR CONVERTING 407B19 MOTOR TO 50 CYCLE

45 RPM Drive Shaft (50 cycles) 98A15-15
78 RPM Drive Shaft Spring (50 cycles) 405A113
33 RPM Drive Shaft Spring (50 cycles) 405A112

*407B19 motor is not used on "Canadian Admiral" changers. For Canadian Admiral replacement motors order:
60 cycle, 105 to 125 volts 407X19-60
25 cycle, 105 to 125 volts 407X19-25

Admiral RC500, RC500A, RC500GA Record Changers, continued.

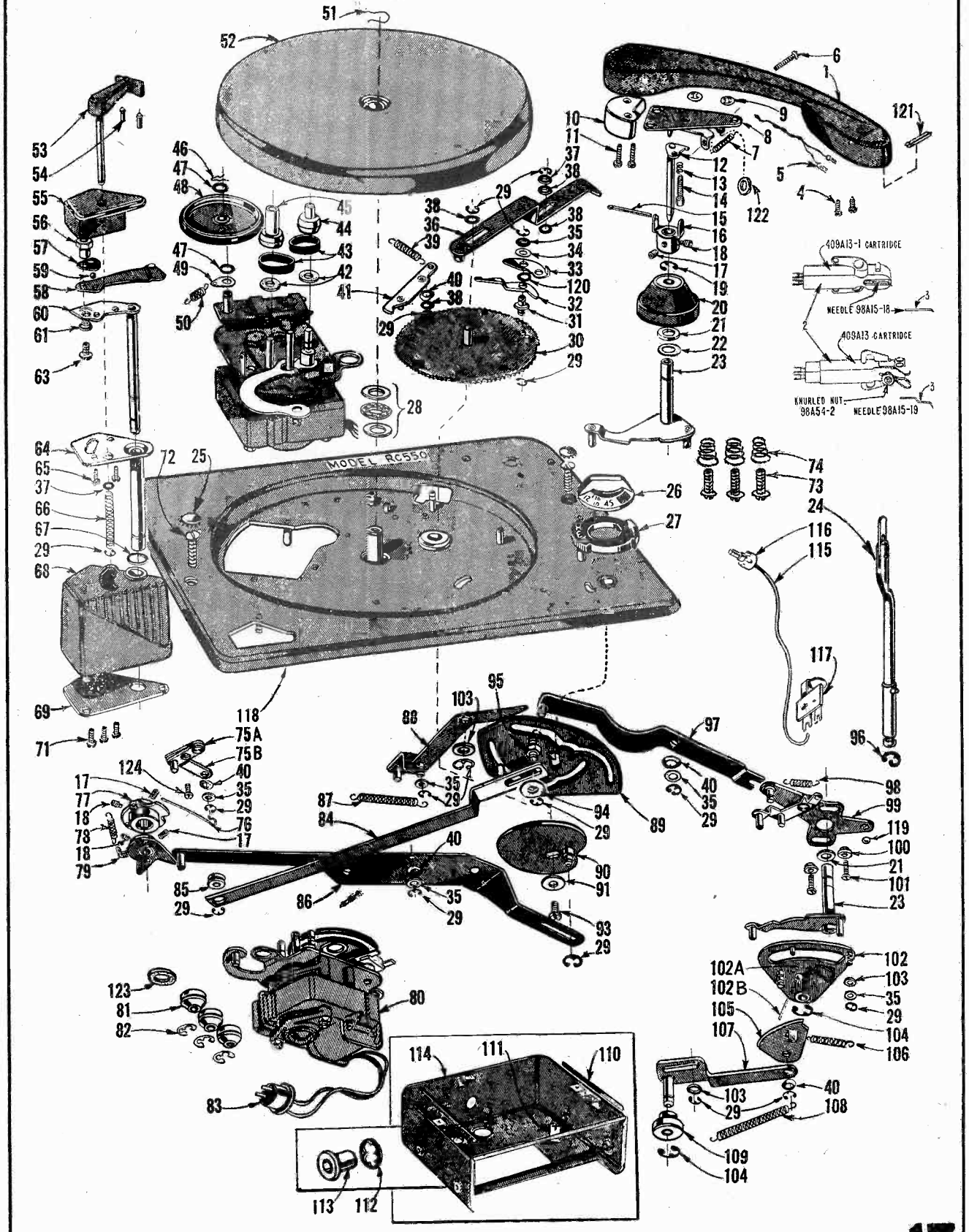

Figure 9. RC550 Record Changer, Exploded View.

RECORD CHANGER TROUBLE SHOOTING

GROOVE SKIPPING

Anything that may cause a drag on the tone arm will contribute to groove skipping. For example, a worn needle will tend to skip grooves. Another possibility is that the Lubriplate (lubricant) between the gear engagement pawl (33) and the trip motion arm (32) may have become excessively tacky after the changer has been in use for some time.

RECORD SLIPPING (45 RPM RECORDS)

Slipping of 45 RPM records may be due to any of the following causes:

1. The 45 RPM adapter nibs may be deformed, may not fit tight enough in the record, or may be cocked. Be sure that the records are not warped. If records have the fibre type 45 RPM adapter, replace them with the plastic type. The plastic type adapter (supplied with later production sets) will fit in the record better and will have sharper nibs. Only the plastic type adapters will be supplied as service replacements. An envelope containing 12 adapters is available under part number 48A8-1.
2. Needle pressure may be too great for this type of record. Try removing a tone arm weight (121), part number 414A45. Two of these weights were used with the 409A13-1 cartridge, and one weight was used with the 409A13 cartridge.

ERRATIC TRIP ACTION

Erratic trip action may be caused by failure of the trip slider return spring (102B) to return the trip slider (36) to its proper position as the changer goes through cycle.

Check the trip slider return spring (102B) for proper tension. Check the trip slider (36) for sticking or binding.

CHANGE IN DRIVE GEAR AND STUD ASSEMBLY (30) Run 5

Early production record changers (below Run 5) used a drive gear and stud assembly (30) with a removable pivot stud (31), see figure 9.

Later production record changers (stamped Run 5 or higher) use a drive gear and stud assembly (30) with the pivot stud riveted to the drive gear.

The early drive gear and stud assembly, part number G400A532 can be replaced with the later drive gear and stud assembly, part number G400A587. However, note that it will be necessary to order a trip pivot hub (128), part number 402A292, and a retaining ring for a 1/8" stud (129), part number 401A355-6.

Changer Will Not Trip.

1. Check to see that the trip slider (36) moves freely.
2. Apply small amount of grease between the trip motion arm (32) and the gear engagement pawl (33).
3. Check tension on trip friction washer (34). If necessary, replace with new washer.
4. Check for grease or oil on trip slider.
5. Check for broken, loose, or misplaced trip slider return spring (102B, Figure 4). It may have slipped over the stud on the slider.

Changer Repeatedly Trips into Change Cycle.

1. Check tension of gear indexing spring (39).
2. Check for bent trip slider return spring (102B, Figure 4).
3. Check for bent trip slider (36).

Tone Arm Does Not Set-Down Properly.

1. Check set-down adjustment. See "Set-Down Adjustment" on page 13.
2. Check to see that size and speed selector knob (26) has locked into position.
3. Check for broken, weak, or missing control plate return spring (108).

Tone Arm Skips Across Records.

1. Check to see that the cabinet is level.
2. Check for worn needle.
3. Check height adjustment.

Changer Causes Rumble or Noise.

1. BE SURE that the shipping screws (72) on each side of changer pan have been removed.
2. Check for any mechanical rub near the 3-speed motor.
3. Check for broken float spring (74).

Records Do Not Push Off or More Than One Record Drops to the Turntable.

1. See "Adjusting Distance Between Record Support and Centerpost" on page 14.
2. Check for broken, missing, or weak push-off return spring (78). The push-off plate (60) may not be returning correctly.
3. Check to see that the push-off assembly is properly locked into position.
4. Check to see that no foreign material is between record support (64) and push-off plate (60).

Changer Trips Into Change Cycle Before Finishing Record.

1. Check for foreign material between trip motion arm (32) and engagement pawl (33).
2. Check for bent trip slider return spring (102B, Figure 4).
3. Check for bent trip slider (36).

Changer Stalls in Change Cycle.

1. Idler wheel (48) rubber tire may have foreign material on it. Try cleaning it with carbon tetrachloride solution.
2. Motor drive belts (43) may be slipping. If necessary, replace with new belts.
3. Be sure push-off assembly locks in position.

Arvin INDUSTRIES, INC. PORTABLE MODEL 650-P CHASSIS RE 292

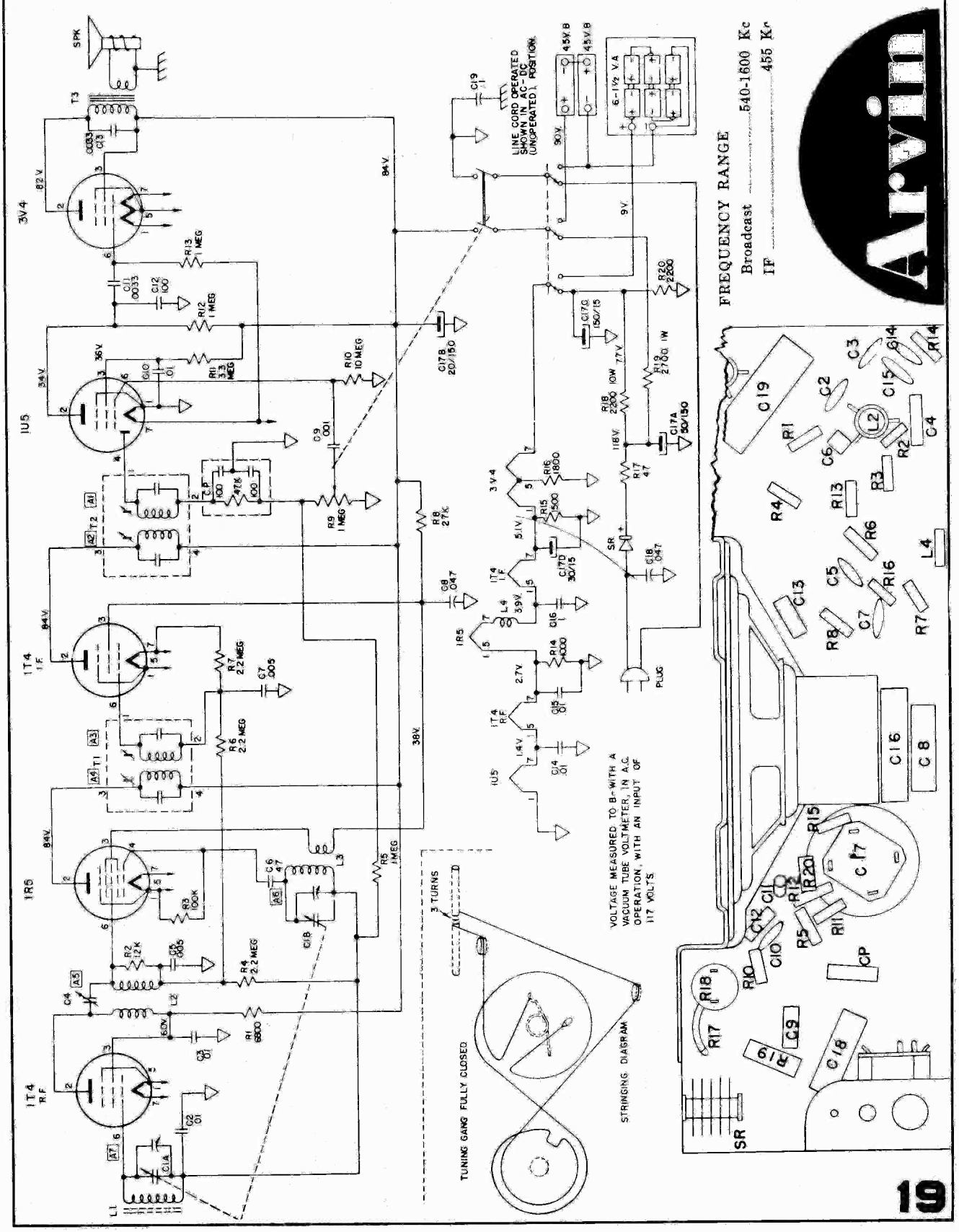

ARVIN RADIO

ARVIN RADIO—MODEL 551T
CHASSIS RE-297—5 TUBE AC

ARVIN RADIOS, MODELS 554CCM AND 554CCB
CHASSIS RE-306, 5 TUBE AC-PHONO

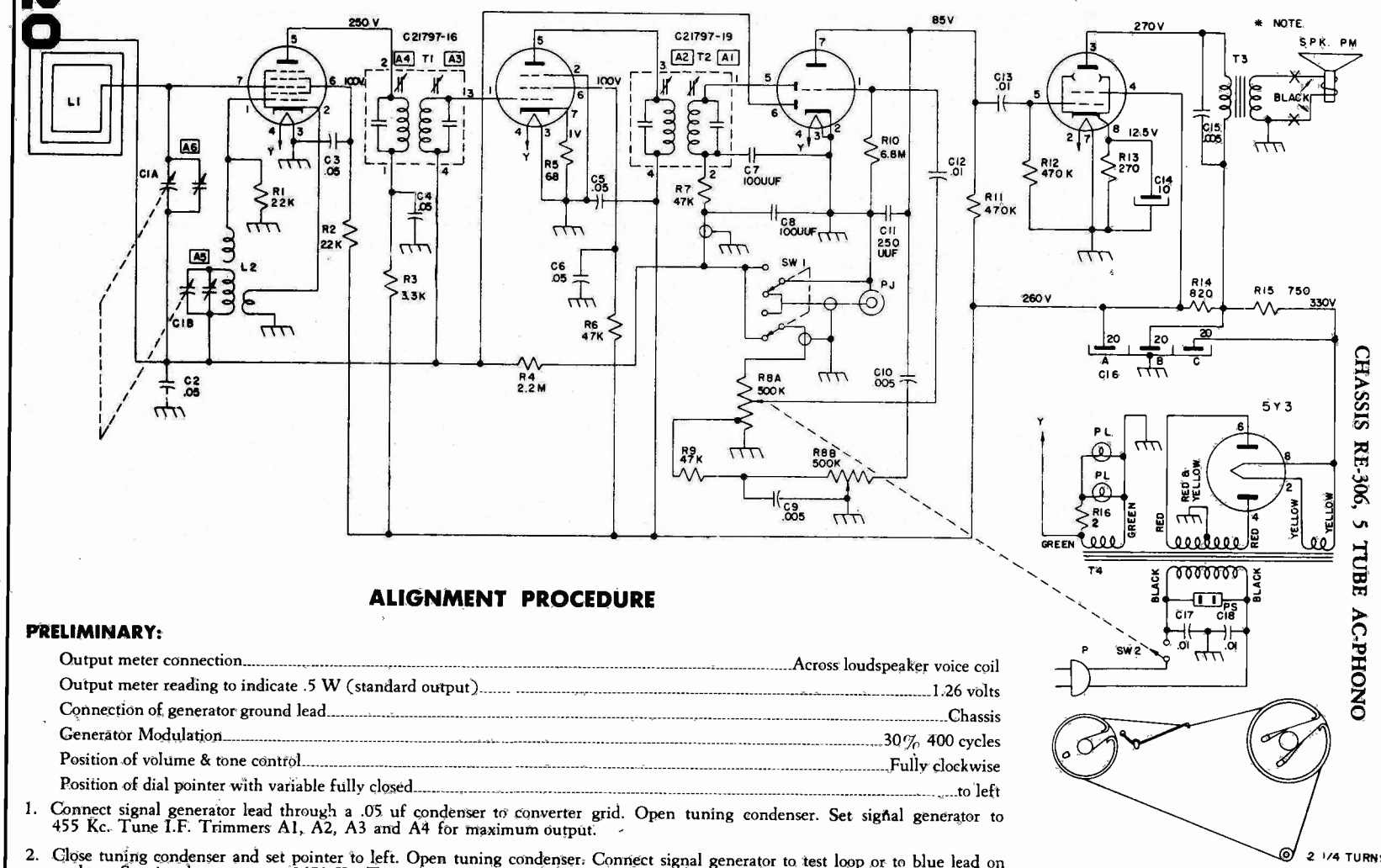

ALIGNMENT PROCEDURE

PRELIMINARY:

Output meter connection ..... Across loudspeaker voice coil
Output meter reading to indicate .5 W (standard output) ..... 1.26 volts
Connection of generator ground lead ..... Chassis
Generator Modulation ..... 30% 400 cycles
Position of volume & tone control ..... Fully clockwise
Position of dial pointer with variable fully closed ..... to left

1. Connect signal generator lead through a .05 uf condenser to converter grid. Open tuning condenser. Set signal generator to 455 Kc. Tune I.F. Trimmers A1, A2, A3 and A4 for maximum output.

2. Close tuning condenser and set pointer to left. Open tuning condenser. Connect signal generator to test loop or to blue lead on set loop. Set signal generator to 1650 Kc. Tune A5 trimmer on oscillator section of tuning condenser for maximum output.

3. Set signal generator to 1400 Kc. Adjust tuning shaft until maximum output is obtained. Tune antenna trimmer A6 on tuning condenser for greatest output. Reset tuning shaft until output is again maximum. Retune antenna trimmer. Repeat this cycle of operations at 1400 Kc. until no further increase of output can be obtained. Keep generator output at a low value to prevent detuning by A.V.C. action.

4. Set signal generator to 600 Kc. Adjust tuning shaft for maximum output. Adjust tuning condenser plate for maximum output if necessary.

Approximate sensitivities with 117 V. AC line voltage and .5 W. output across voice coil should be: Antenna lead 600 Kc. —600 uv/m., 1000 Kc.—400 uv/m., 1400 Kc.—300 uv/m.

K INDICATES 1000 OHMS.
M INDICATES MEGOHMS UNMARKED CONDENSER VALUES ARE MFD
* NOTE "X" DENOTES PLUG AND SOCKET ON RE306
GROUND TO CHASSIS
CURVED LINE INDICATES OUTSIDE FOIL.

TUBE SOCKETS ARE VIEWED FROM UNDERSIDE OF CHASSIS.
VOLTAGE READINGS SHOWN AT SOCKET PRONGS ARE TO CHASSIS AND ARE TAKEN WITH NO SIGNAL, AC LINE VOLTAGE AT 117 V. AC; VOLTAGE MEASURED WITH VACUUM TUBE VOLTMETER

PJ PHONO JACK FOR PICK-UP ARM.
PS PHONO SOCKET FOR AC MOTOR.
P AC PLUG.
SW-1 PHONO SWITCH SHOWN IN RADIO POSITION.

ARVIN RADIO

ARVIN RADIOS, MODELS 553
CHASSIS RE-308, 5 TUBE AC-DC

FREQUENCY RANGE
Broadcast ..... 540-1600 kc
IF ..... 455 kc

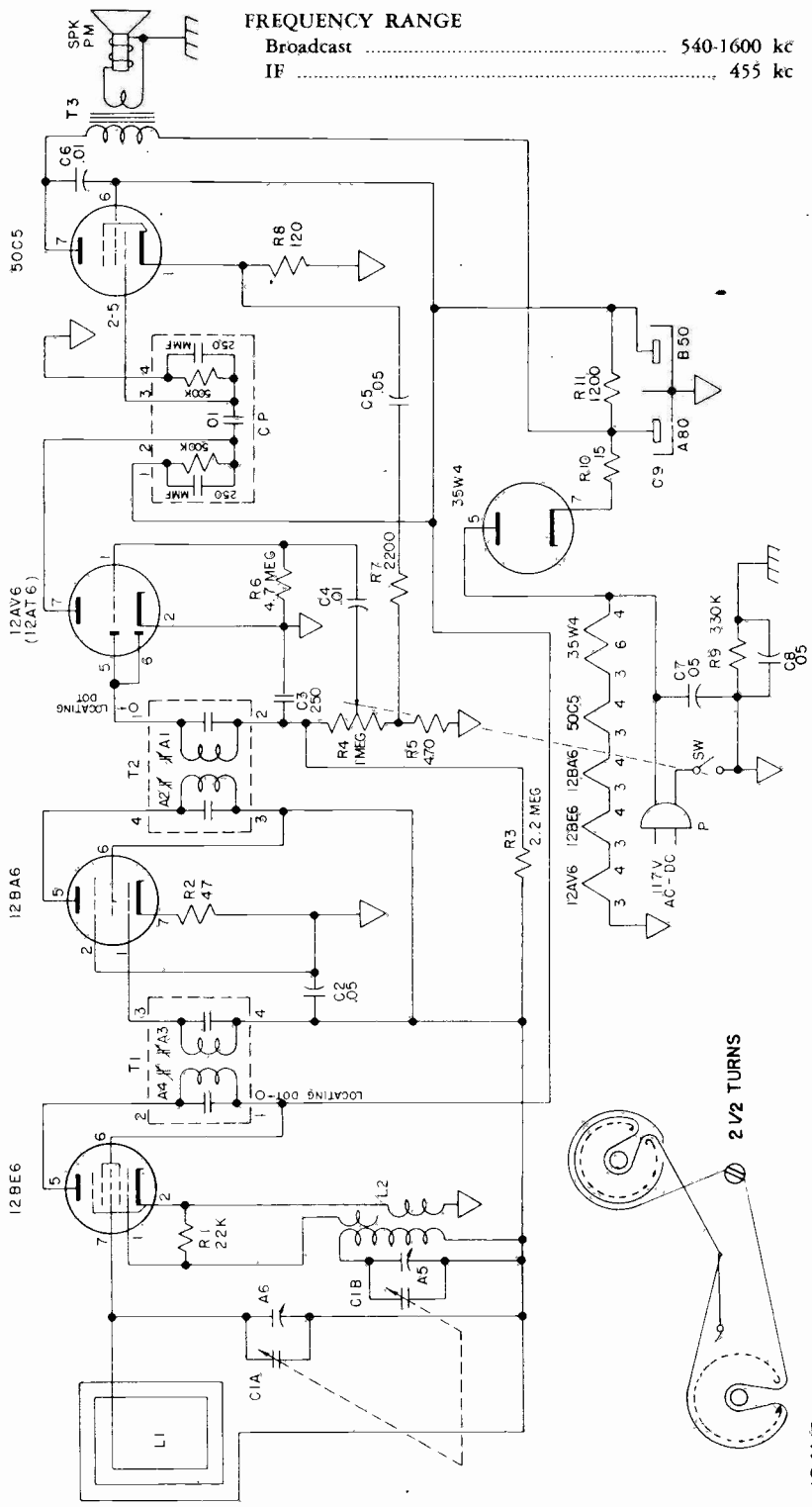

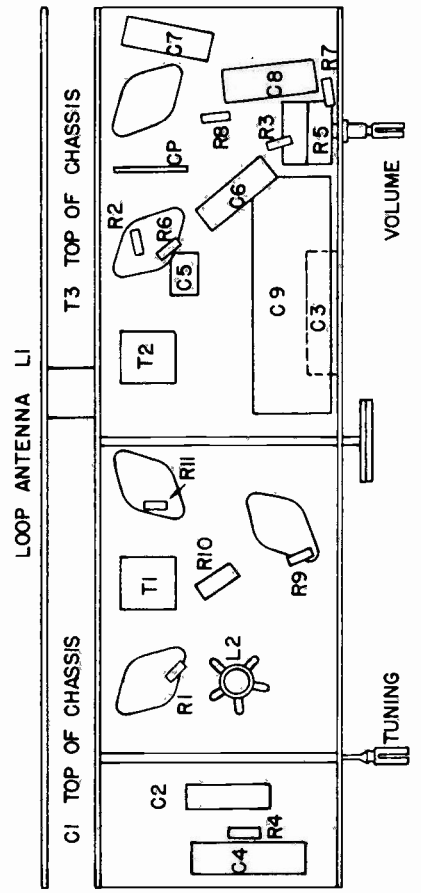

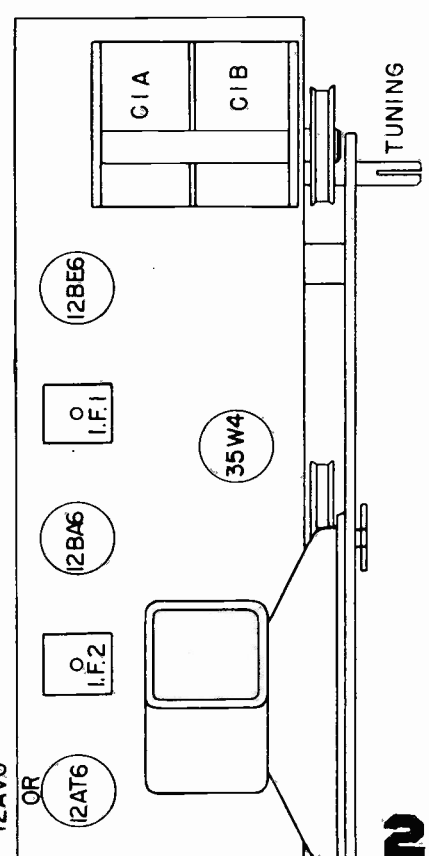

ARVIN INDUSTRIES, Inc.

CLOCK MODEL 657T CHASSIS RE 307

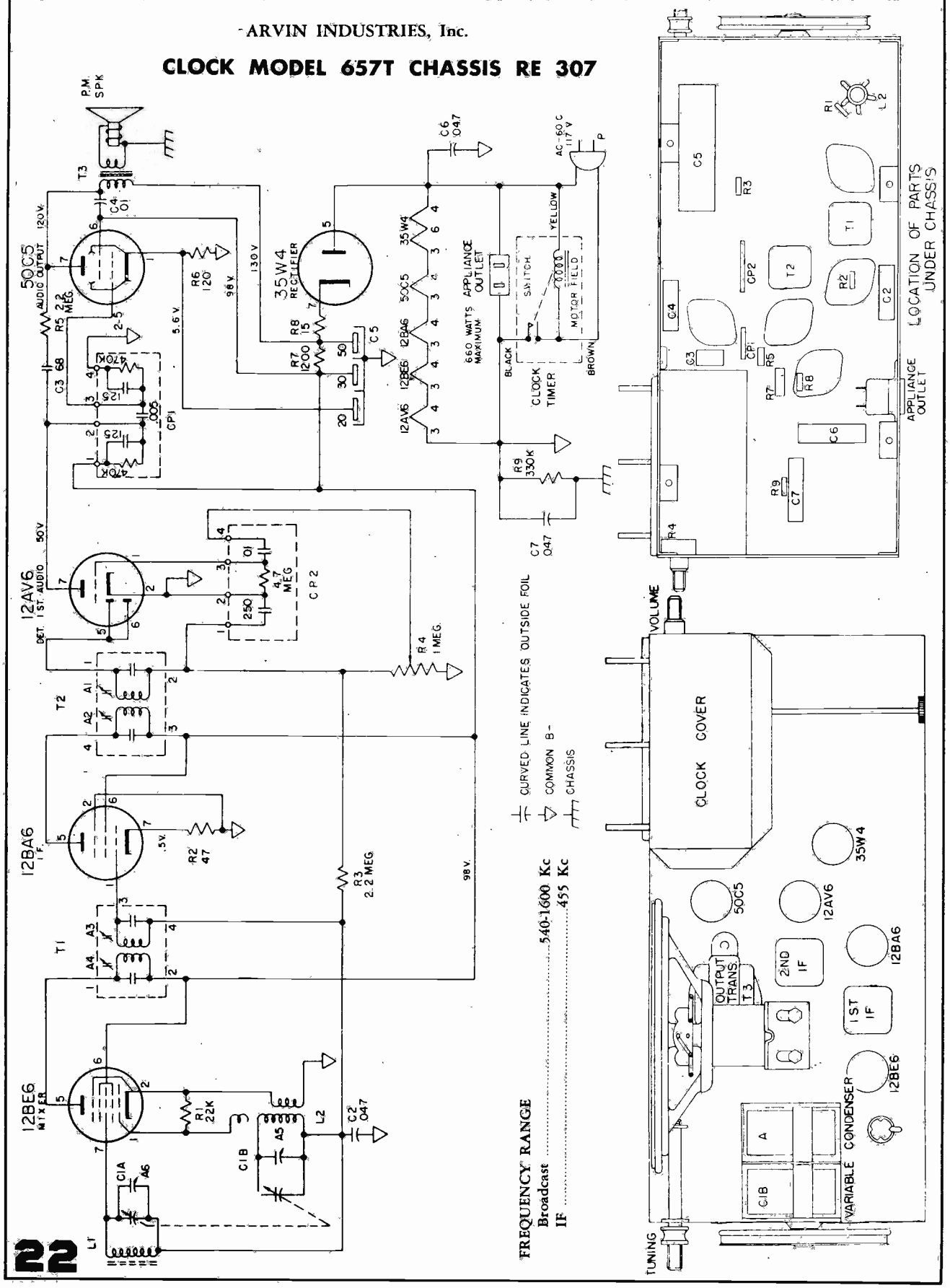

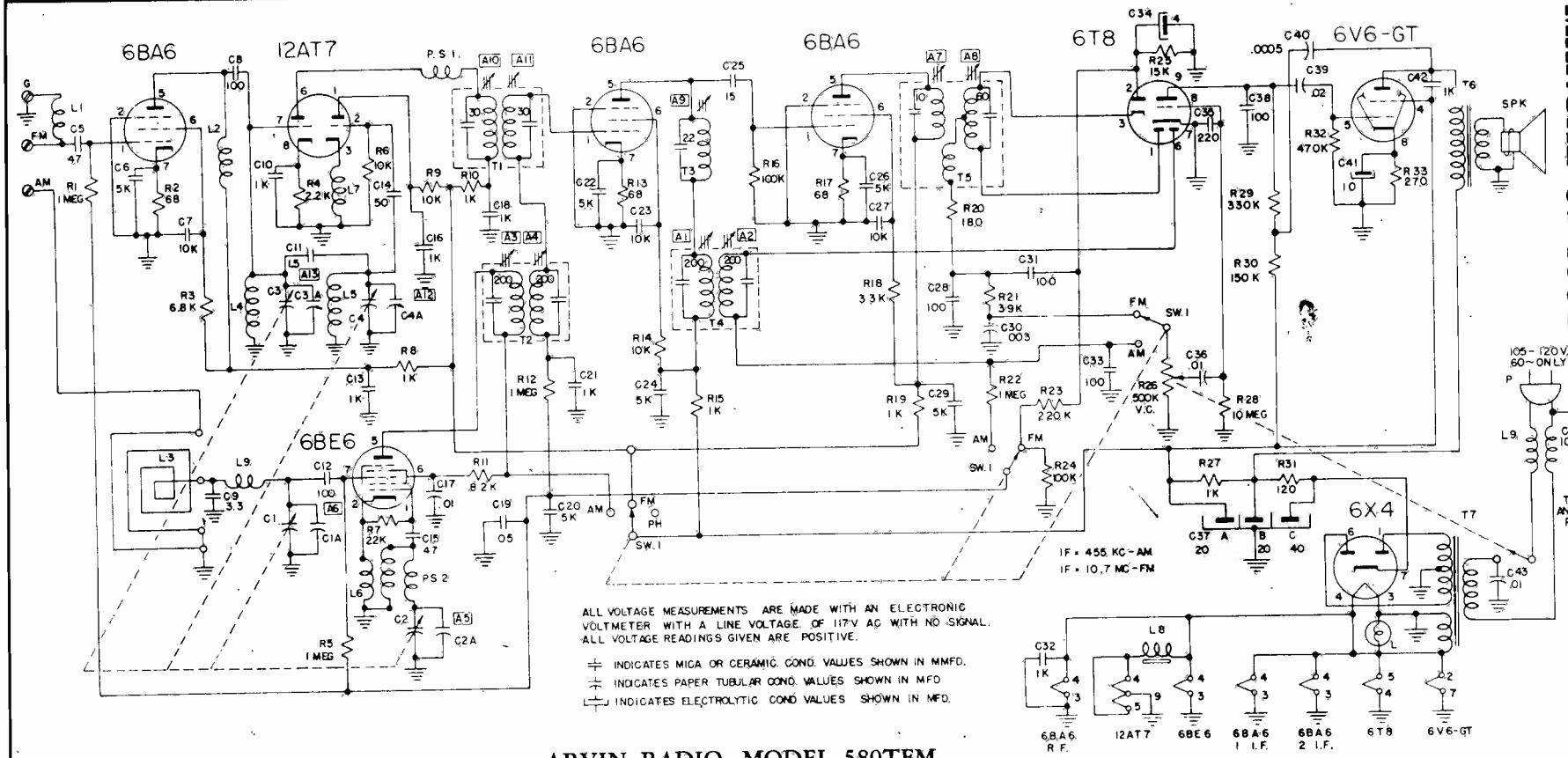

ARVIN RADIO

ARVIN RADIO, MODEL 580TFM

CHASSIS RE-313, 8 TUBE AC, AM-FM

The circuit on this page is exact for Model 580TFM, Chassis RE-313, while Chassis RE-310, used in Models 582CFB and 582CFM, has an extra position on SW.1 for phono switching and required additional wiring. Alignment information for all these models is given on the next page.

TECHNICAL INFORMATION

AM Tuning range — 540 Kc. to 1600 Kc. **Intermediate Frequency** 455 Kc. I. F. and R. F. measurements made at 500 milliwatts output — approximately 1.27 volts on a receiver type voltmeter connected across speaker voice coil. Approximate input for 500 MW output: I. F. 300 uv; R. F. with standard loop: at 600 Kc. 1200 uv/m; at 1000 Kc. 900 uv/m; at 1400 Kc. 800 uv/m.

FM Tuning range — 88 megacycles to 108 megacycles. Intermediate frequency 10.7 megacycles .I.F. and R.F. measurements made at 500 milliwatts output — approximately 1.27 volts on a rectifier type voltmeter connected across speaker voice coil. Approximate input for 500 MW output: I. F. 300 uv; R. F. "Absolute Measurements": 91 megacycles 100 uv; 105 megacycles, 100 uv.

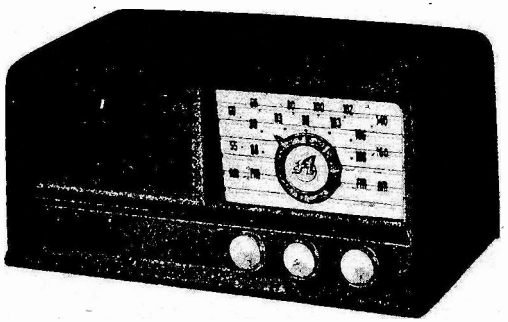

ARVIN RADIO

Models 580TFM, 582CFM, and 582CFB, Chassis RE-310 and RE-313, continued.

ALIGNMENT PROCEDURE

Output meter connection ..... Across speaker voice coil
Output meter reading to indicate 500 MW ..... 1.27 volts
Generator Modulation ..... 30%, 400 cycles
Position of volume control ..... Fully clockwise
Set dial pointer ..... Horizontal, variable condenser closed
Set band switch .....
.....To left for AM alignment, right for FM alignment

AM ALIGNMENT,

Position of Variable	Generator Frequency	Dummy Ant.	Generator Connection (high)	Generator Connection Ground Lead	Adjust Trimmers In Order Shown For Max. Output	Trimmer Function
Open	455 Kc	.05 mfd.	Mixer Grid	Chassis	A1, A2, A3, A4,	I. F.
Open	1650 Kc		*Test Loop	Test Loop	A5	Oscillator
1400 Kc	1400 Kc		*Test Loop	Test Loop	A6	Antenna
**600 Kc	600 Kc		*Test Loop	Test Loop	Check Point	Antenna

* Connect generator lead to Standard Hazeltine Test Loop, Model 1150, placed two feet from the set loop, or three turns of wire about six inches in diameter, placed about one foot from the set loop. Or the generator can be connected with the high side lead to the AM antenna screw terminal and the ground lead to the chassis.
**With a generator signal of 600 Kc, tune the set to the point where maximum output is obtained, which shoul be approximately 600 Kc on the dial. Adjust antenna section plates of variable for maximum output.
The alignment procedure should be repeated in the original order for greatest accuracy.
Always keep the output from the signal generator at its lowest possible value to make the A. V. C. action of the receiver ineffective.

FM ALIGNMENT

1. Turn band switch to FM, (right).

2. Connect (FM) I. F. generator to the second 6BA6 I. F. amp. grid, (lug No. 1) through a .01 uf mica dummy. Connect oscilloscope across volume control. With the I. F. generator tuned to 10.7 mc with 150 Kc deviation, and the same audio voltage used as horizontal sweep on the scope that is used to modulate the generator, adjust the ratio detector transformer slugs A7-A8 for the characteristic "S" curve (See Fig. 1), with maximum vertical height on the scope. After this adjustment the top slug of the ratio detector should not be moved during the rest of the alignment.

3. Connect I. F. generator to mixer grid through .01 mica dummy. Using 23 Kc deviation at 10.7 Mc, adjust for maximum output. Maximum output may be indicated by maximum vertical height on the scope or maixmum voltage on a standard output meter across the voice coil of the receiver. After the two I. F. transformers have been aligned the bottom slug A8 of the ratio detector should also be peaked.

   The characteristi. "S" curve of the complete I. F. channel should be checked by applying a 10.7 Mc signal with 150 Kc deviation to the mixer grid and observing the "S" curve on the scope. It should not be very much different from that observed in step 2.

   Connect R. F. (FM) generator (88 to 108Mc) to the antenna terminals through the standard 300 ohm dummy (150 ohm in each side of generator leads).

   Use R. F. generator with 23 Kc deviation. With the variable condenser completely open and Signal Generator tuned to 108.5 Mc adjust oscillator trimmer A12 (small ceramic trimmer) for maximum reading on output meter.

   Then tune receiver to low end of band (variable completely closed) and Signal Generator to 87.5 Mc. If the receiver does not tune to this frequency the FM oscillator coil L4 will either have to be squeezed together or lengthened to cover the band, (squeezing lowers and lengthening raises the frequency). Any change in the coil will have to be completed by the trimmer at the high end of the band.

5. With the same Signal Generator connections as per paragraph 4 tune Signal Generator and set to 105 Mc. Tune R. F. trimmer A13 for maximum output at the same time rock variable back and forth through the frequency. (Rocking is necessary because slight oscillator pulling causes erroneous maximum readings).

   Tune Signal Generator and set to 90 Mc. Adjust R. F. coil L3 length for maximum output by squeezing or lengthening. Any change in the coil will have to be compensated at 105 Mc by the R. F. trimmer A13.

6. After Steps 4 and 5 are finished check calibration and band coverage. Steps 4 and 5 may have to be repeated if set is off calibration. Band coverage should be 87.5 Mc to 108.5 Mc. Sensitivity should be approximately 100 uv at 105 Mc, 98 Mc and 90 Mc.

FIG. 1.

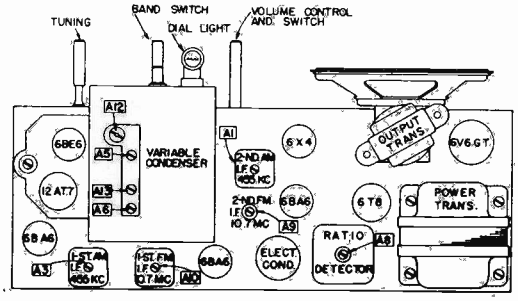

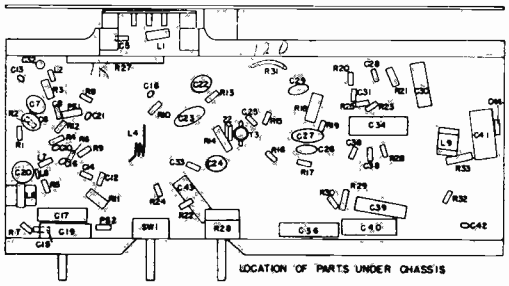

CAPEHART-FARNSWORTH CORPORATION

SERVICE INFORMATION

MODEL 10

RADIO CHASSIS C-312

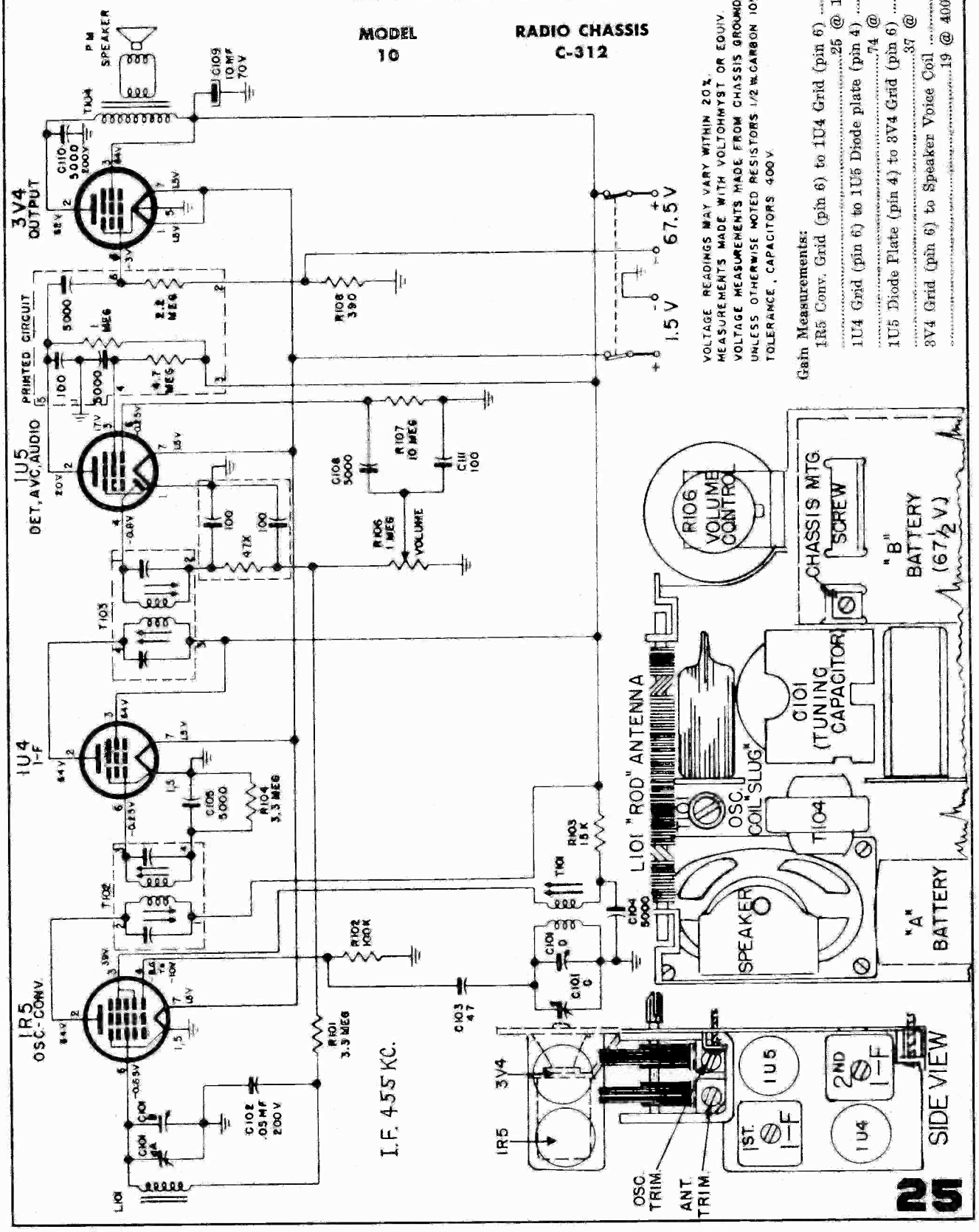

VOLTAGE READINGS MAY VARY WITHIN 20%.
MEASUREMENTS MADE WITH VOLTOHMYST OR EQUIV.
VOLTAGE MEASUREMENTS MADE FROM CHASSIS GROUND.
UNLESS OTHERWISE NOTED RESISTORS 1/2 W. CARBON 10% TOLERANCE, CAPACITORS 400 V.

Gain Measurements:

1R5 Conv. Grid (pin 6) to 1U4 Grid (pin 6) .....
.....25 @ 1000KC
1U4 Grid (pin 6) to 1U5 Diode plate (pin 4) .....
.....74 @ 455KC
1U5 Diode Plate (pin 4) to 3V4 Grid (pin 6) .....
.....37 @ 455KC
3V4 Grid (pin 6) to Speaker Voice Coil .....
.....19 @ 400 C.P.S.

CAPEHART-FARNSWORTH CORPORATION

MODEL 15

RADIO CHASSIS CR-48

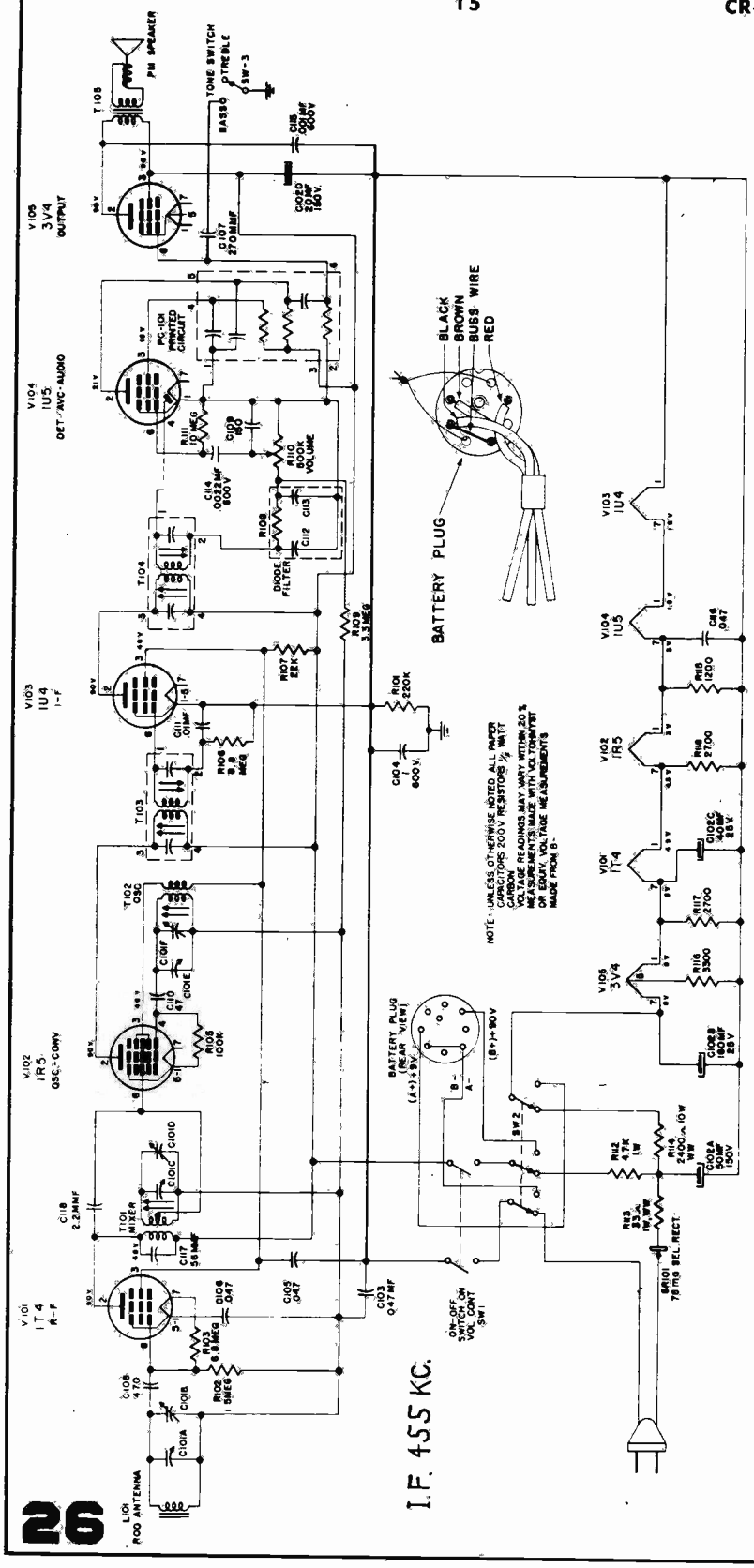

TO REMOVE CHASSIS FROM CABINET

1. Remove cabinet back cover by lifting the handle up and pulling outward at the top rear of the cabinet. After the top is disengaged the back is completely removed by disengaging the hinges at the bottom.
2. Remove two screws that hold chassis to cabinet (see chassis layout drawing).
3. With the cabinet front setting upright, the chassis can be removed by grasping the handle and sliding the chassis out the back.
4. The battery can be removed or left on the chassis as desired. Care must be exercised that the battery does not slide from the battery carrier when the chassis is being removed. Damage to the battery cable can result.

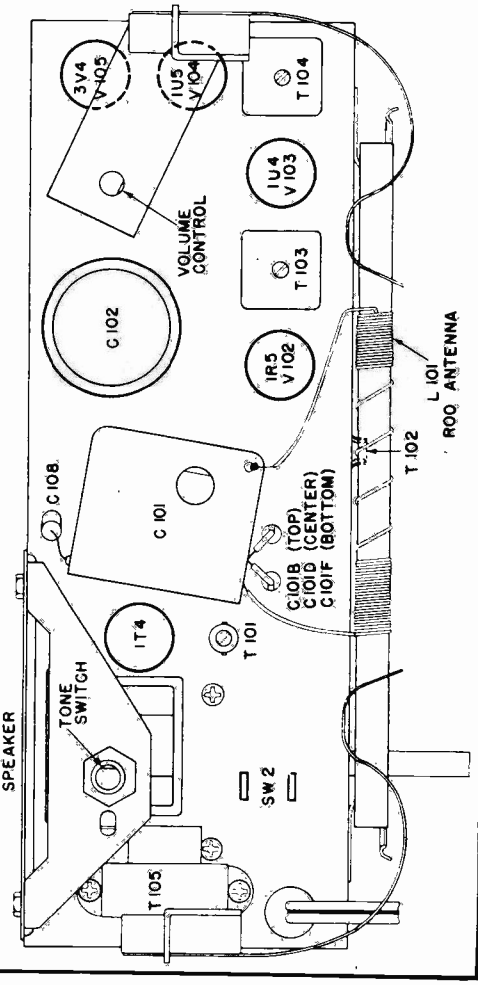

MANUAL OF 1952 MOST-OFTEN-NEEDED RADIO DIAGRAMS

ANDREA RADIO CORP. Model P-163, Three-Way, Three-Band Portable.

I.F. ALIGNMENT Set signal generator to 455 KC. Turn band selector switch of receiver to band 1. Connect high side of generator through a .1 mfd. condenser to stator side of antenna section of gang condenser. Ground side of generator to chassis. Connect a 0-1 volt copper oxide rectifier meter across voice coil of speaker. Align two trimmers on top of each I.F. transformer for maximum output. This completes the I.F. alignment.

R.F. ALIGNMENT Connect copper oxide type rectifier meter across speaker voice coil. Connect high side of generator through a 200 mmf. condenser to antenna post "A" on loop. Ground side of generator to chassis. Set generator to 1500 KC, the dial pointer to 1500 KC, Band switch to Band 1, and adjust Band 1. Adjust band 1 antenna shunt trimmer on loop (see location on diagram). Set signal generator at 600 KC and dial pointer on set at 600 KC. Adjust band 1 series oscillator trimmer (see diagram for location) for maximum output. While this adjustment is being made, rotate the tuning control slightly back and forth for each small adjustment of the oscillator condenser, otherwise the alignment will not be accurate. Set the signal generator back to 1500 KC and retouch antenna shunt trimmer band 1. This completes band 1 alignment.

BAND 2 ALIGNMENT Replace 200 mmf. condenser with 400 ohm resistor. Set signal generator to 6.0 megacycles and dial to 6.0 mc. Turn waveband switch to band 2. Adjust Band 2 oscillator shunt trimmer for maximum output. Adjust Band 2 antenna shunt trimmer on loop at 6.0 mc. for maximum output.

BAND 3 ALIGNMENT Set signal generator 18 mc. and dial to 18 mc. Turn band switch to Band 3. Use 400 ohm antenna dummy. Adjust Band 3 oscillator shunt trimmer for maximum output, noting that the setting is not the image frequency. Adjust Band 3 antenna shunt trimmer on loop for maximum output. During this adjustment, rotate the gang condenser back and forth slowly for each trimmer setting or poor alignment will result. After alignment, check to see that the setting is not on the image frequency.

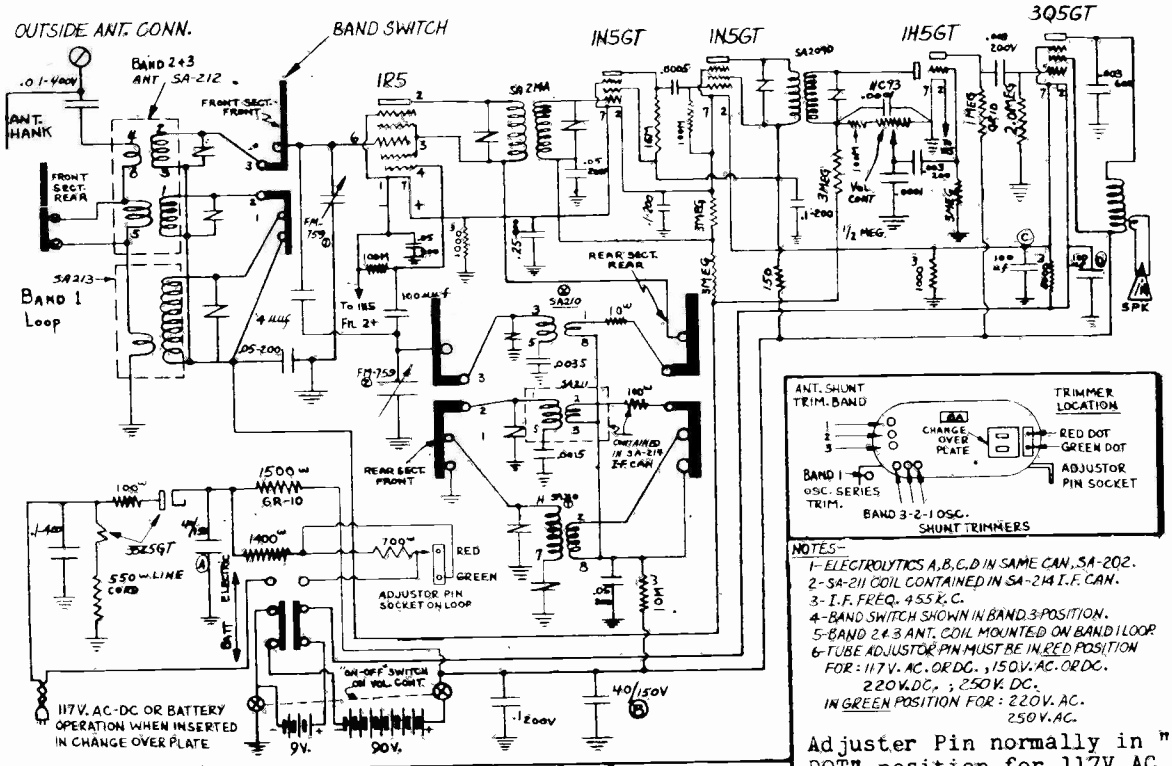

NOTES—
1-ELECTROLYTICS A,B,C,D IN SAME CAN, SA-202.
2-SA-211 COIL CONTAINED IN SA-214 I.F. CAN.
3-I.F. FREQ. 455 K.C.
4-BAND SWITCH SHOWN IN BAND 3 POSITION.
5-BAND 2 & 3 ANT. COIL MOUNTED ON BAND 1 LOOP.
6-TUBE ADJUSTOR PIN MUST BE IN RED POSITION FOR: 117 V. AC. OR DC., 150 V. AC. OR DC. 220 V. DC., 250 V. DC.
IN GREEN POSITION FOR: 220 V. AC. 250 V. AC.

Adjuster Pin normally in "RED DOT" position for 117V AC or DC.

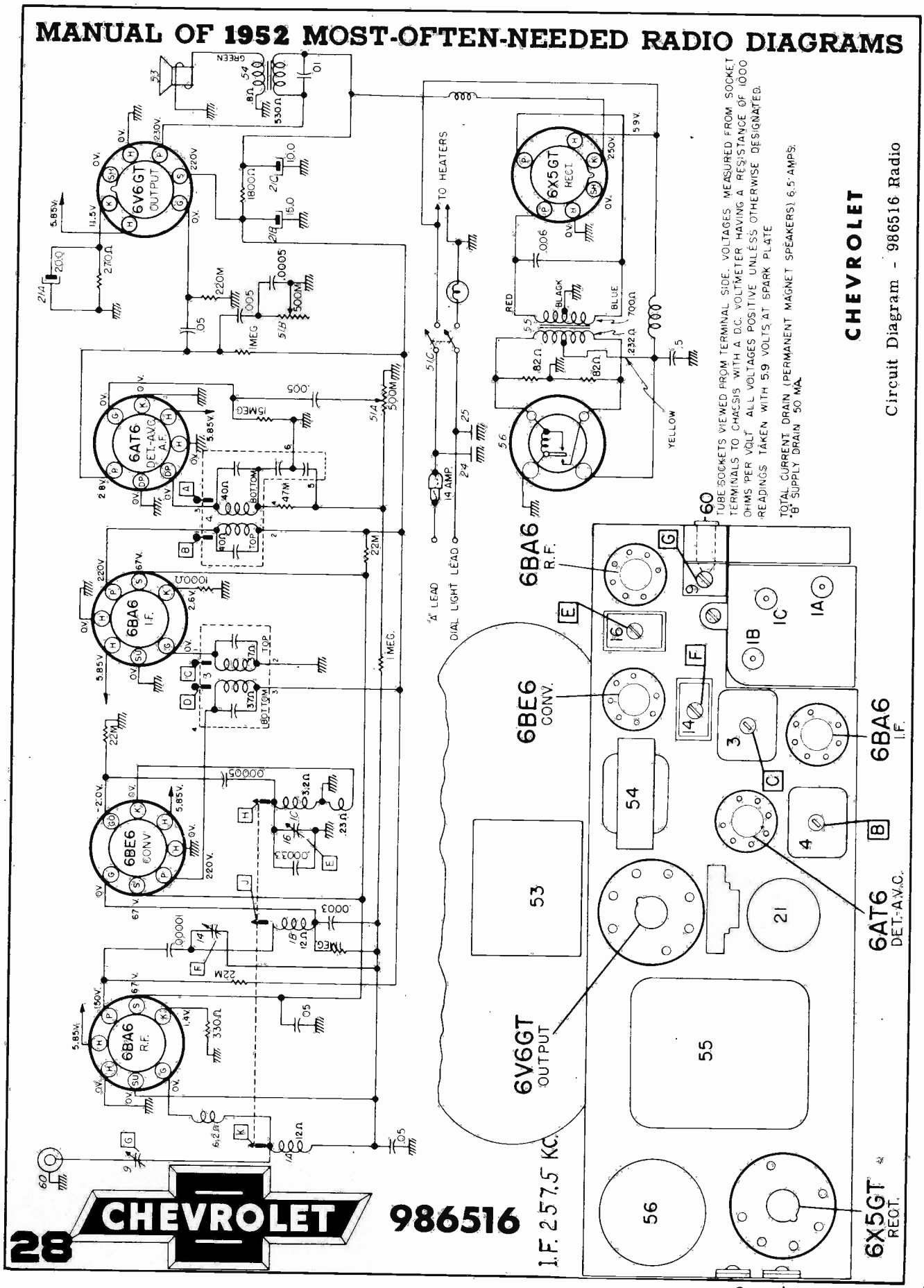
CHEVROLET
Circuit Diagram - 986516 Radio
TUBE SOCKETS VIEWED FROM TERMINAL SIDE. VOLTAGES MEASURED FROM SOCKET TERMINALS TO CHASSIS WITH A D.C. VOLTMETER HAVING A RESISTANCE OF 1000 OHMS PER VOLT. ALL VOLTAGES POSITIVE UNLESS OTHERWISE DESIGNATED. READINGS TAKEN WITH 5.9 VOLTS AT SPARK PLATE
TOTAL CURRENT DRAIN (PERMANENT MAGNET SPEAKERS) 6.5 AMPS.
"B" SUPPLY DRAIN 50 MA.
6V6GT OUTPUT
6X5GT RECT.
6AT6 DET.-A.V.C.
6BA6 I.F.
6BE6 CONV.
6BA6 R.F.
TO HEATERS
DIAL LIGHT LEAD
"A" LEAD
I.F. 257.5 KC.
986516
CHEVROLET
28

MANUAL OF 1952 MOST-OFTEN-NEEDED RADIO DIAGRAMS

~~CROSLEY~~

MODELS 10-135, 10-136E, 10-137, 10-138, 10-139, 10-140
(Chassis 285, 285-1)

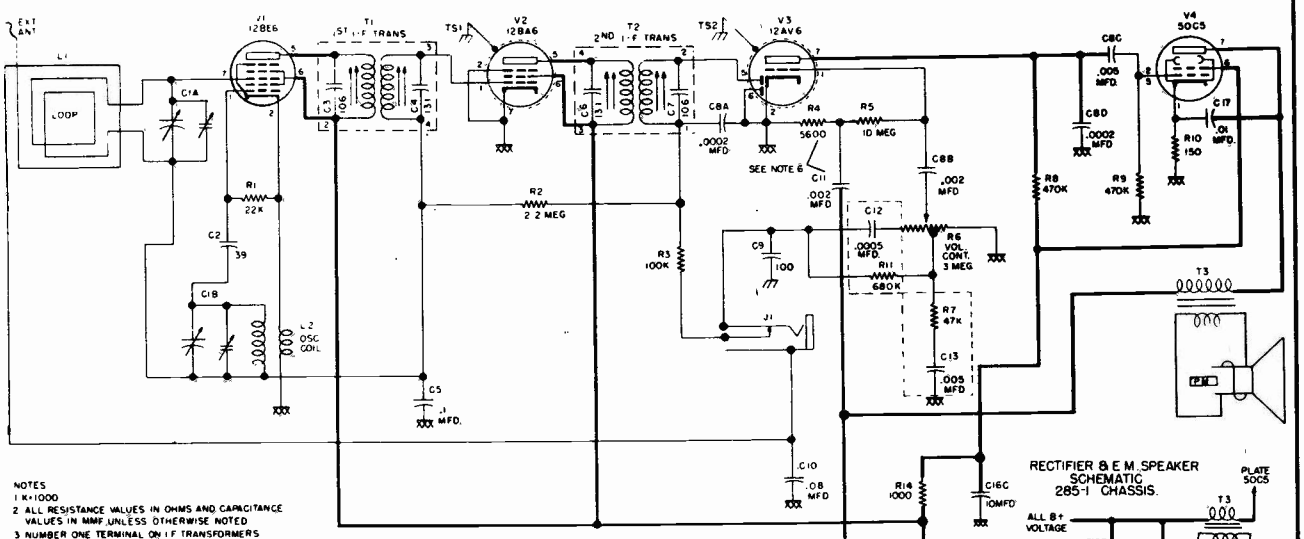

NOTES
1 K=1000
2 ALL RESISTANCE VALUES IN OHMS AND CAPACITANCE VALUES IN MMF UNLESS OTHERWISE NOTED
3 NUMBER ONE TERMINAL ON I.F TRANSFORMERS CODED WITH GREEN DOT, NUMBERS PROGRESS CLOCKWISE
4 I-F = 455 KC
5 = CHASSIS
= COMMON WIRING
6 R4 AND C11 USED WITH PM SPEAKERS ONLY

RECTIFIER & E.M. SPEAKER SCHEMATIC 285-1 CHASSIS.

Earlier production sets covered in 1950 volume.

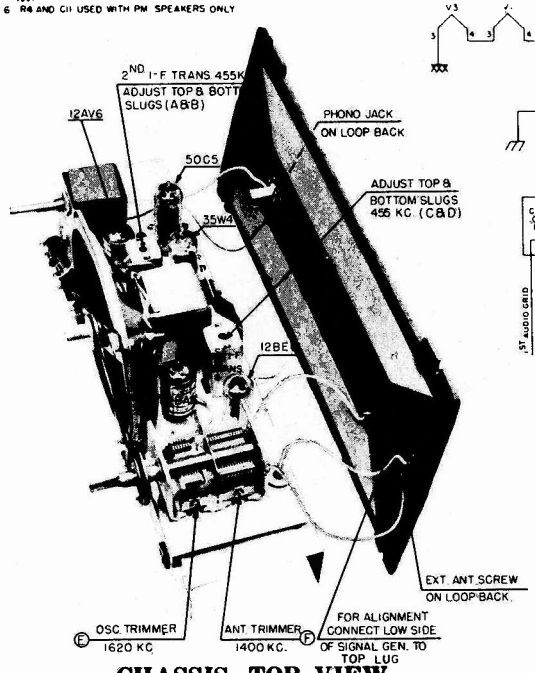

CHASSIS, TOP VIEW

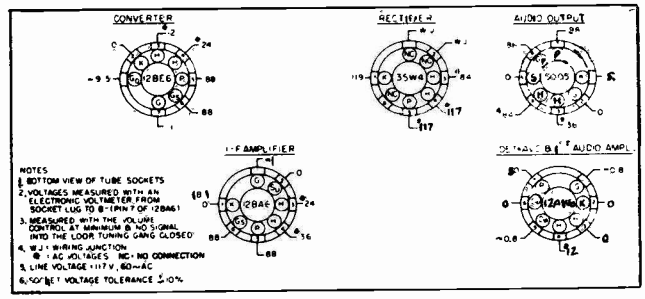

SOCKET VOLTAGE CHART

ALIGNMENT CHART

Alignment Sequence	Signal Generator Output			Position of Dial Pointer	Adjust for Maximum Output
	Frequency in kc.	In Series with	To		
1	455	200 mmf.	External Ant. Screw	1620	* A, B, C & D
2	1620	200 mmf.	External Ant. Screw	1620	E
3	1400	200 mmf.	External Ant. Screw	1400	F

* Repeat adjustments until maximum output is obtained.

MANUAL OF 1952 MOST-OFTEN-NEEDED RADIO DIAGRAMS

CROSLEY

MODELS: E15WE, E15BE, E15TN, E15SL, E15CE, E20MN, E20GN, E20GY, E20TN
(Chassis 15-20E)

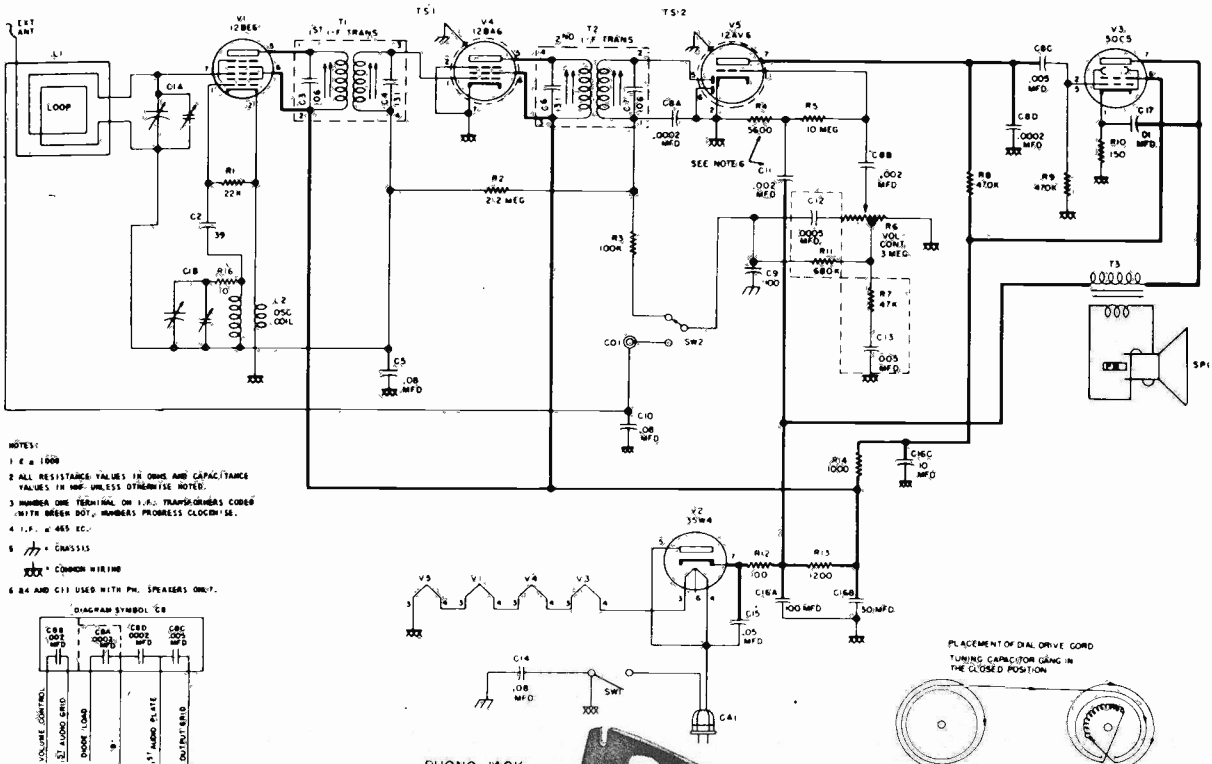

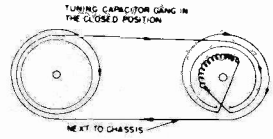

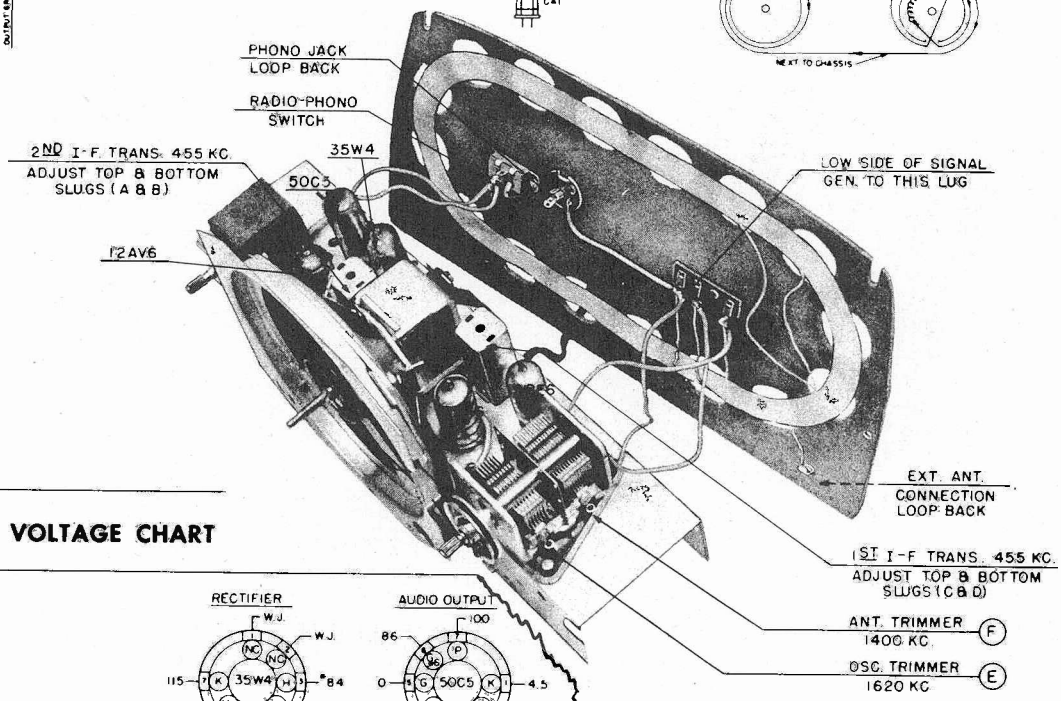

SOCKET VOLTAGE CHART

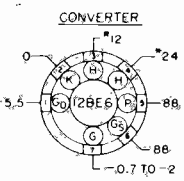

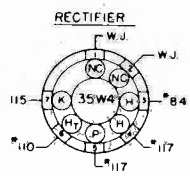

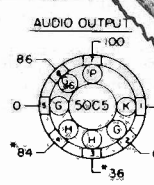

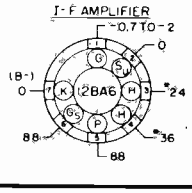

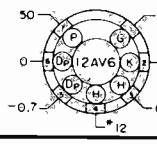

CHASSIS, TOP VIEW

NOTES:
1. BOTTOM VIEW OF TUBE SOCKETS
2. VOLTAGES MEASURED WITH AN ELECTRONIC VOLTMETER FROM SOCKET LUG TO B-(PIN 7 OF 12BA6)
3. MEASURED WITH THE VOLUME CONTROL AT MINIMUM & NO SIGNAL INTO THE LOOP, TUNING GANG CLOSED.
4. W.J.= WIRING JUNCTION.
   * = AC VOLTAGES. NC = NO CONNECTION.
5. LINE VOLTAGE = 117V., 60 ~ A.C.
6. SOCKET VOLTAGE TOLERANCE ± 10%.

CROSLEY

MODELS: E30BE, E30GN, E30MN, E30TN
(Chassis 30E: 30E-1)

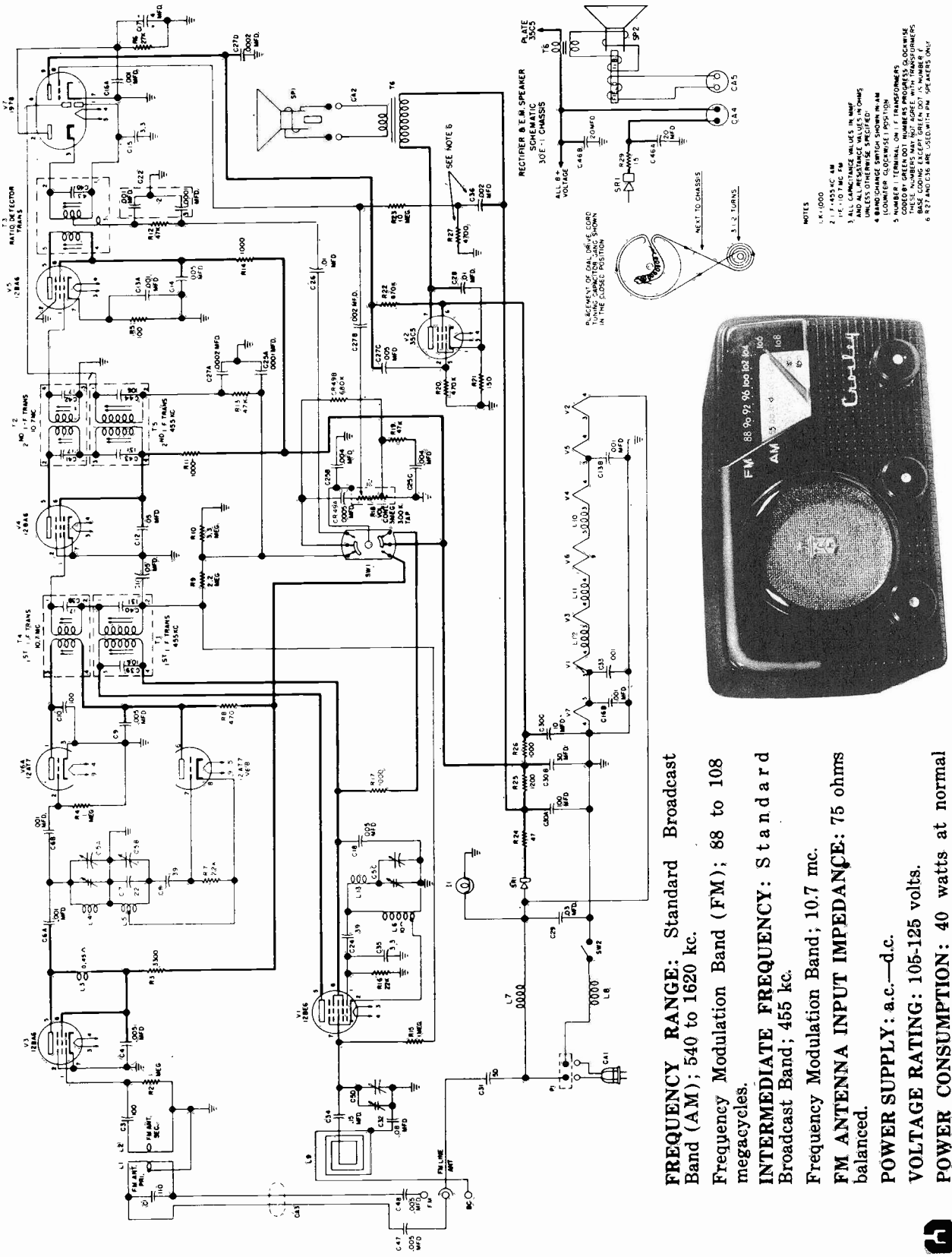

FREQUENCY RANGE: Standard Broadcast Band (AM); 540 to 1620 kc.
Frequency Modulation Band (FM); 88 to 108 megacycles.

INTERMEDIATE FREQUENCY: Standard Broadcast Band; 455 kc.
Frequency Modulation Band; 10.7 mc.

FM ANTENNA INPUT IMPEDANCE: 75 ohms balanced.

POWER SUPPLY: a.c.—d.c.

VOLTAGE RATING: 105-125 volts.

POWER CONSUMPTION: 40 watts at normal power supply voltage (117 volts).

CROSLEY

Models: E30BE, E30GN, E30MN, E30TN,
Chassis 30E, 30E-1 (Continued from previous page)

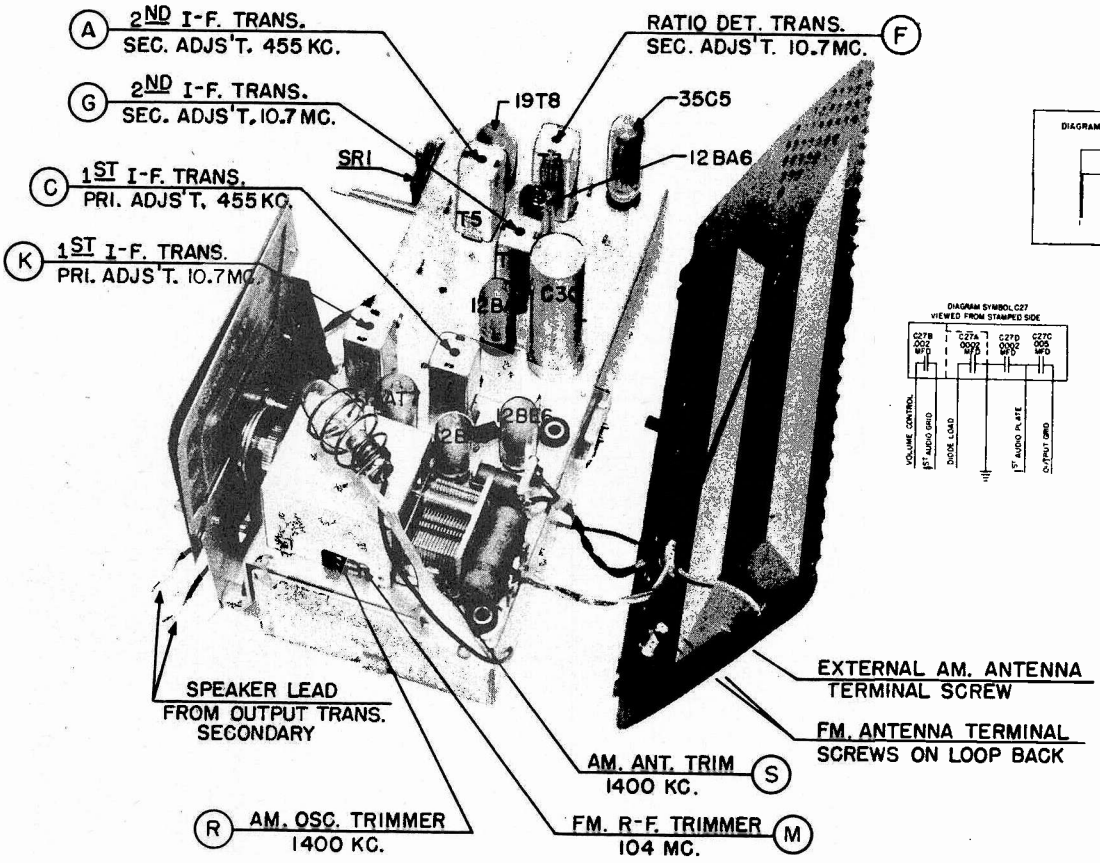

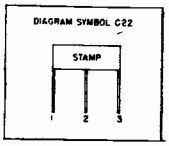

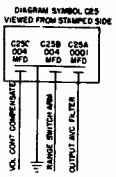

CHASSIS TOP VIEW SHOWING ALIGNMENT ADJUSTMENTS

NOTES:
1. BOTTOM VIEW OF TUBE SOCKETS.
2. VOLTAGES MEASURED FROM SOCKET LUG TO CHASSIS (B-) WITH AN ELECTRONIC VOLTMETER; TUNING GANG IN CLOSED POSITION WITH NO SIGNAL, VOLUME CONTROL AT MINIMUM.
3. SUPPLY VOLTAGE 117 VOLTS, 60 CYCLES
4. ALL VOLTAGES MEASURED WITH THE SELECTOR SWITCH IN THE AM. POSITION EXCEPT WHERE MARKED WITH DELTA (▲).
5. ▲ = VOLTAGE WITH SELECTOR SWITCH IN FM. POSITION.
6. * = A.C. VOLTAGES.
7. ◯→ DENOTES ALIGNMENT LOCATIONS.
8. SOCKET VOLTAGE TOLERANCE ±10%.
9. PLATE VOLTAGE ON THE 35C5 -----CHASSIS 30E = 115 VOLTS. ----- CHASSIS 30E-1 = 76 VOLTS.

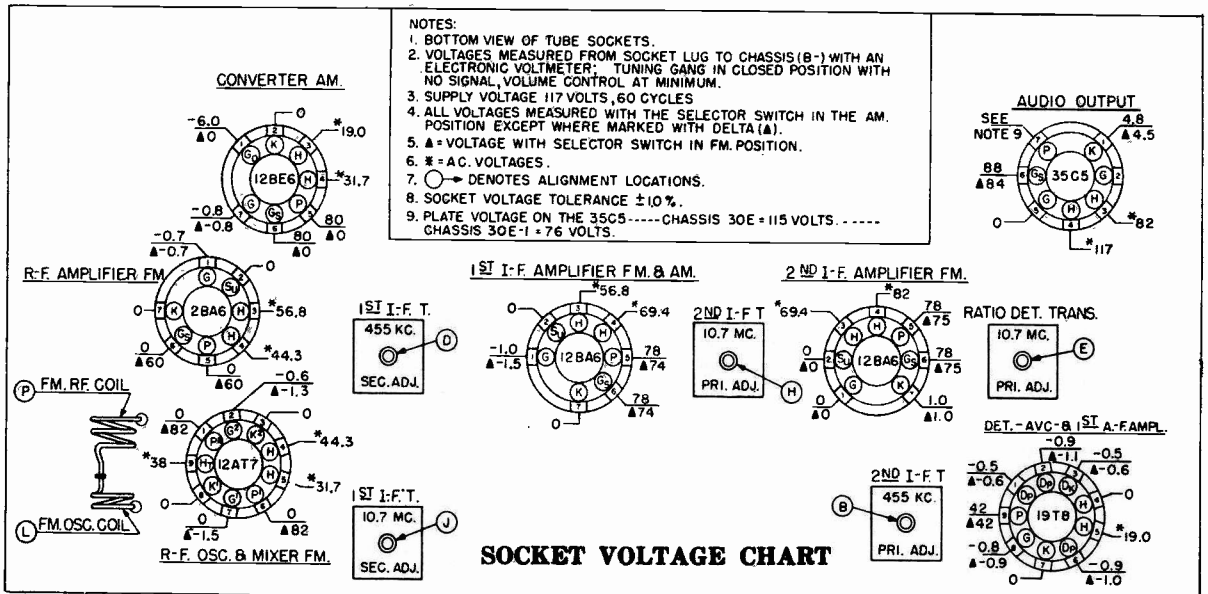

SOCKET VOLTAGE CHART

DeWALD RADIO MANUFACTURING CORP.

MODEL D-E 517 A

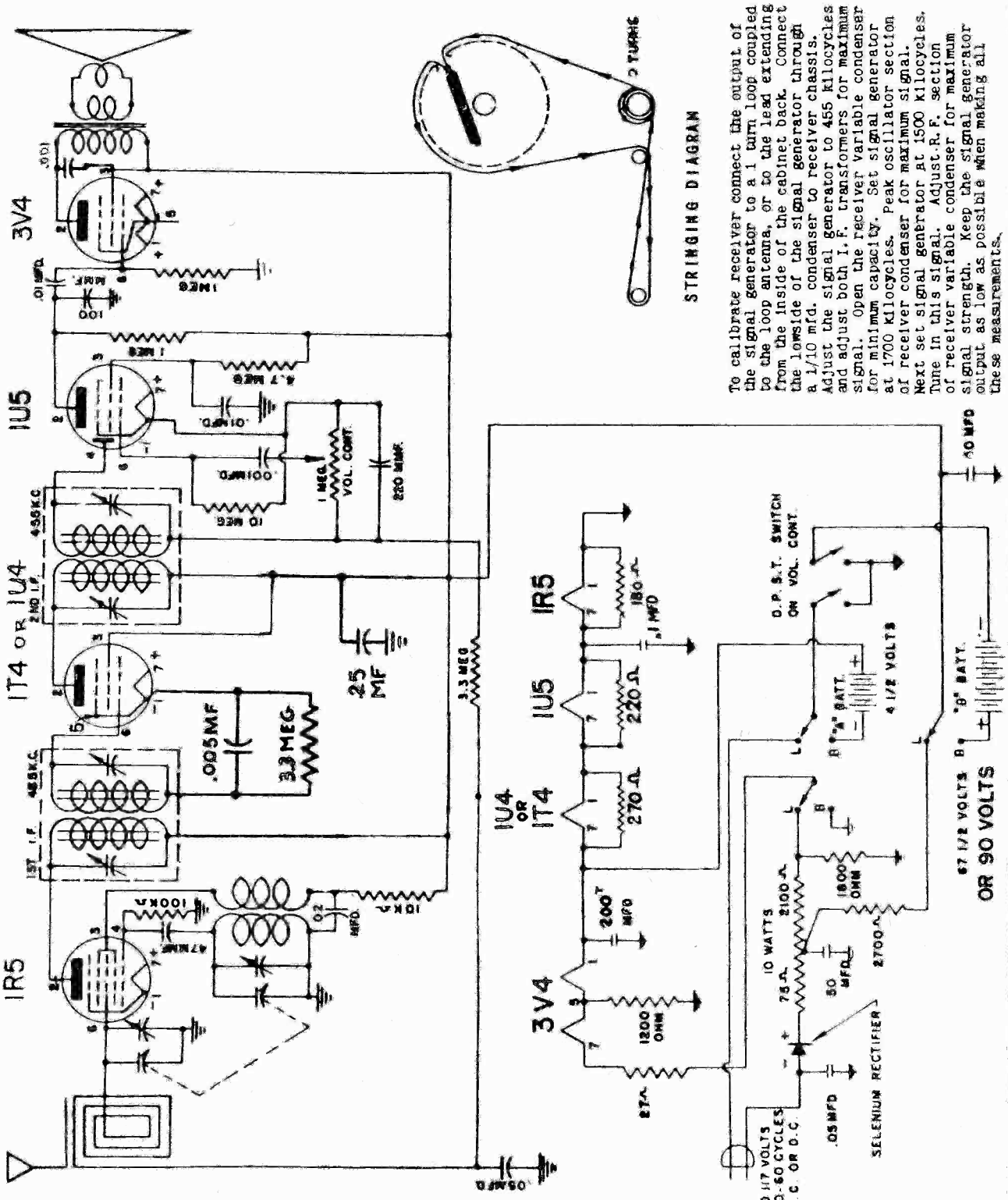

To calibrate receiver connect the output of the signal generator to a 1 turn loop coupled to the loop antenna, or to the lead extending from the inside of the cabinet back. Connect the lowside of the signal generator through a 1/10 mfd. condenser to receiver chassis. Adjust the signal generator to 455 kilocycles and adjust both I.F. transformers for maximum signal. Open the receiver variable condenser for minimum capacity. Set signal generator at 1700 kilocycles. Peak oscillator section of receiver condenser for maximum signal strength. Keep the signal generator output as low as possible when making all these measurements.

Emerson Radio

Models 653B and 702B, Chassis 120136-B.

See next page for circuit diagram.

ALIGNMENT

To set pointer, turn variable condenser fully closed and set pointer at mark near left end of dial backplate. Use isolation transformer if available. If not, connect a 0.1 mfd. condenser in series with low side of signal generator and chassis. Volume control should be at maximum position; output of signal generator should be no higher than necessary to obtain an output reading. Use an insulated alignment screwdriver for adjusting.

	DUMMY ANTENNA	SIGNAL GENERATOR COUPLING	SIGNAL GENERATOR FREQUENCY	RADIO DIAL SETTING	METER OUTPUT	ADJUST	REMARKS
1	0.1 mfd.	High side to stator of rear section of tuning condenser. Low side to chassis.	455 kc	Variable condenser fully open.	Across voice coil.	A1, A2, A3, A4	Adjust for maximum output. If isolation transformer is not used, reduce dummy antenna to 0.001 mfd. to reduce hum modulation.
2	200 mmfd.	High side to external antenna lead. Low side to external ground lead.	1620 kc	Variable condenser fully open.	Across voice coil.	A5	Adjust for maximum output.
3	200 mmfd.	High side to external antenna lead. Low side to external ground lead.	1400 kc	Tune for maximum output.	Across voice coil.	A6	Adjust for maximum output.

DEWALD RADIO MANUFACTURING CORP. MODEL F-523

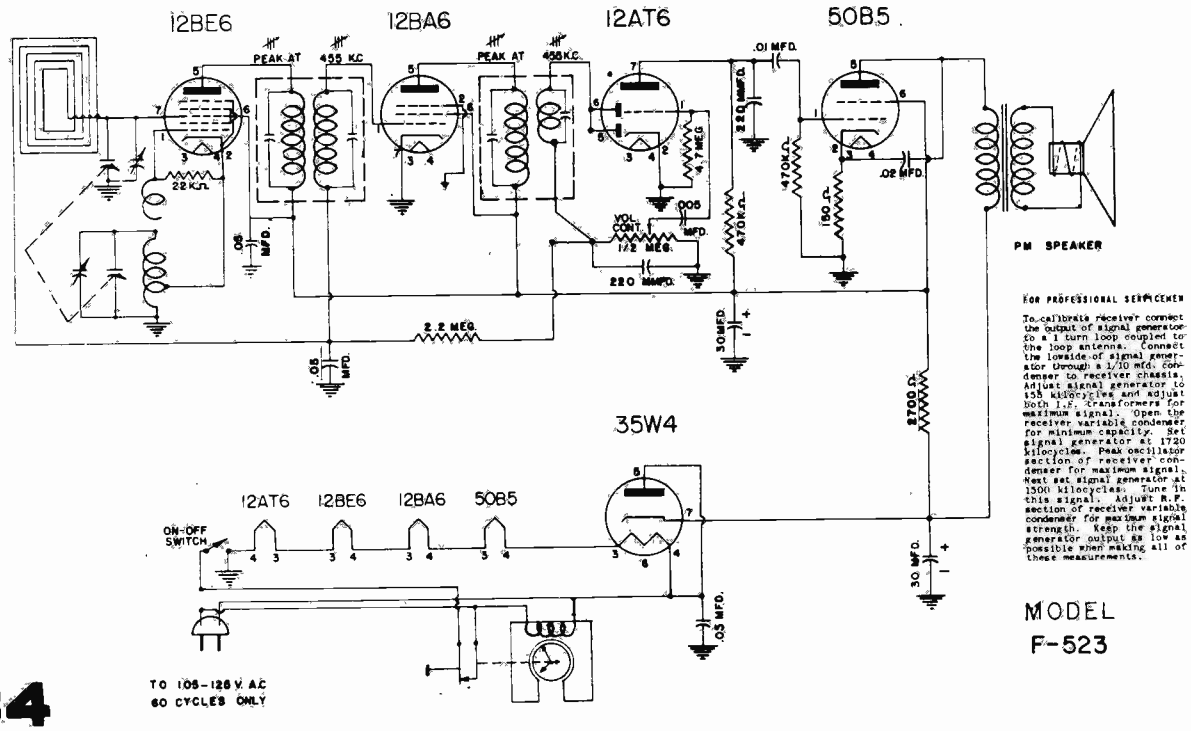

FOR PROFESSIONAL SERVICEMEN

To calibrate receiver connect the output of signal generator to a 1 turn loop coupled to the loop antenna. Connect the lowside of signal generator through a 1/10 mfd. condenser to receiver chassis. Adjust signal generator to 455 kilocycles and adjust both I.F. transformers for maximum signal. Open the receiver variable condenser for minimum capacity. Set signal generator at 1720 kilocycles. Peak oscillator section of receiver condenser for maximum signal. Next set signal generator at 1500 kilocycles. Tune in this signal. Adjust R.F. section of receiver variable condenser for maximum signal strength. Keep the signal generator output as low as possible when making all of these measurements.

Emerson Radio

MODELS: 653B - 702B

CHASSIS: 120136-B

See preceding page for alignment.

Circuit of Model 702B has an additional 220K resistor connected from B- to chassis.

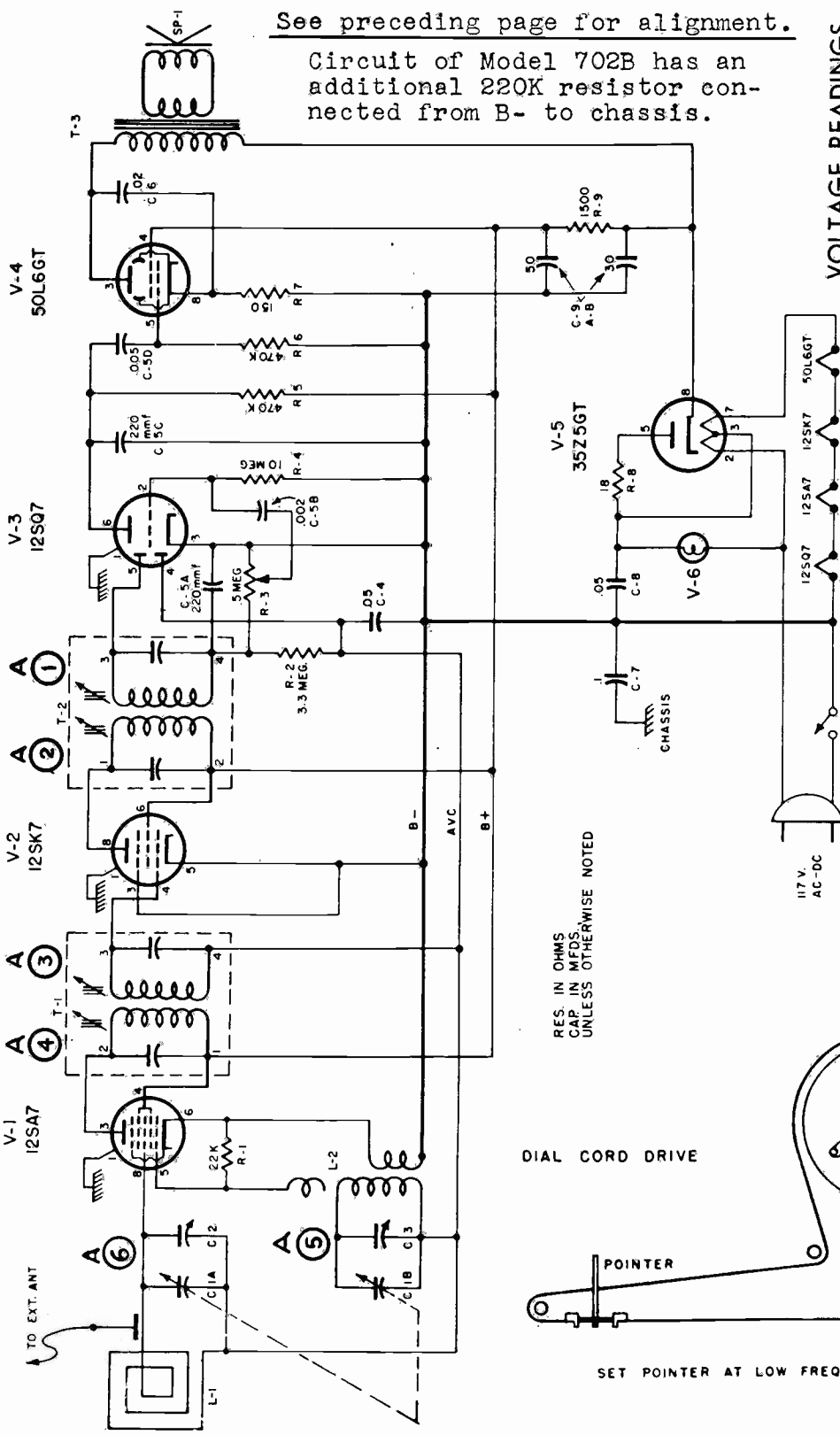

VOLTAGE READINGS

SYMBOL	TUBE	PIN 1	PIN 2	PIN 3	PIN 4	PIN 5	PIN 6	PIN 7	PIN 8
V-1	12SA7	—.3 DC	24 AC	80 DC	80 DC	—.6 DC	0	12 AC	—.7 DC
V-2	12SK7	—.3 DC	36 AC	0	—.1 DC	0	80 DC	24 AC	80 DC
V-3	12SQ7	—.3 DC	—.7 DC	0	—.7 DC	—.5 DC	50 DC	0	12 AC
V-4	50L6GT	0	80 AC	110 DC	80 DC	0	0	36 AC	5 DC
V-5	35Z5GT	0	117 AC	110 AC	0	110 AC	0	80 AC	110 DC

D-C voltage measurements are at 20,000 ohms per volt; a-c voltage measured at 1,000 ohms per volt.

Measured values are from socket pin to common negative.

Line voltage maintained at 117 volts for voltage readings.

Nominal tolerance on component values makes possible a variation of ±15%

Volume control at maximum, no signal applied for voltage measurements.

DIAL CORD DRIVE

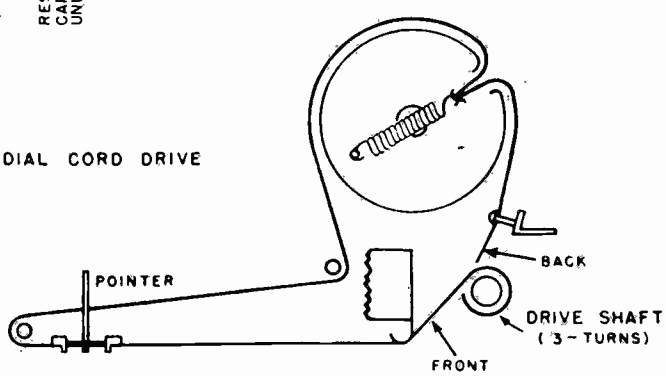

SET POINTER AT LOW FREQ END OF DIAL

Emerson Radio

MODELS – 695B
710B

CHASSIS – 120146-B

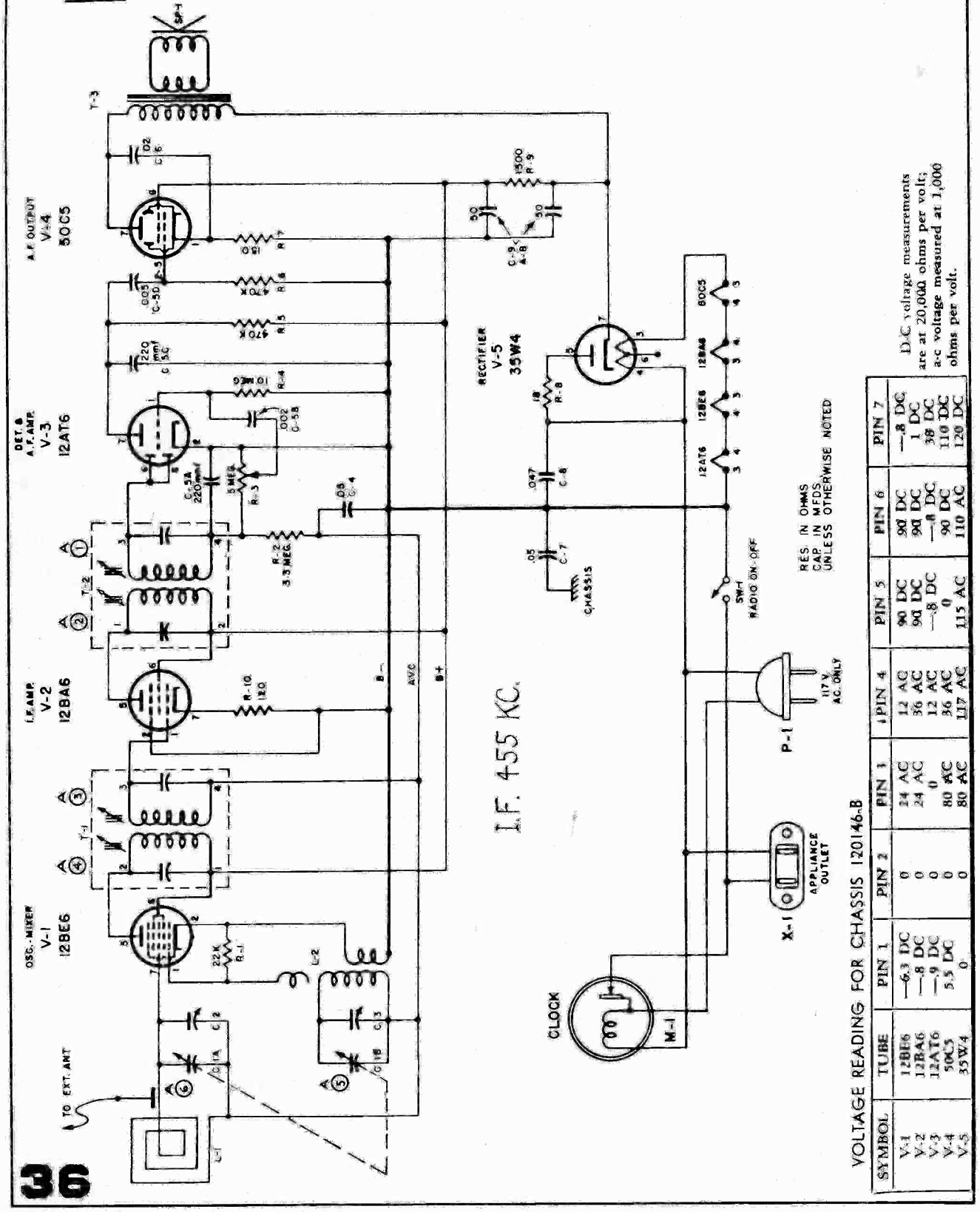

D.C. voltage measurements are at 20,000 ohms per volt; a-c voltage measured at 1,000 ohms per volt.

VOLTAGE READING FOR CHASSIS 120146-B

SYMBOL	TUBE	PIN 1	PIN 2	PIN 3	PIN 4	PIN 5	PIN 6	PIN 7
V-1	12BE6	—6.3 DC	0	24 AC	12 AC	90 DC	90 DC	—.8 DC
V-2	12BA6	—.8 DC	0	24 AC	36 AC	90 DC	90 DC	1 DC
V-3	12AT6	—.9 DC	0	0	12 AC	—.8 DC	—.8 DC	38 DC
V-4	50C5	5.5 DC	0	80 AC	36 AC	0	90 DC	110 DC
V-5	35W4	0	0	80 AC	117 AC	115 AC	110 AC	120 DC

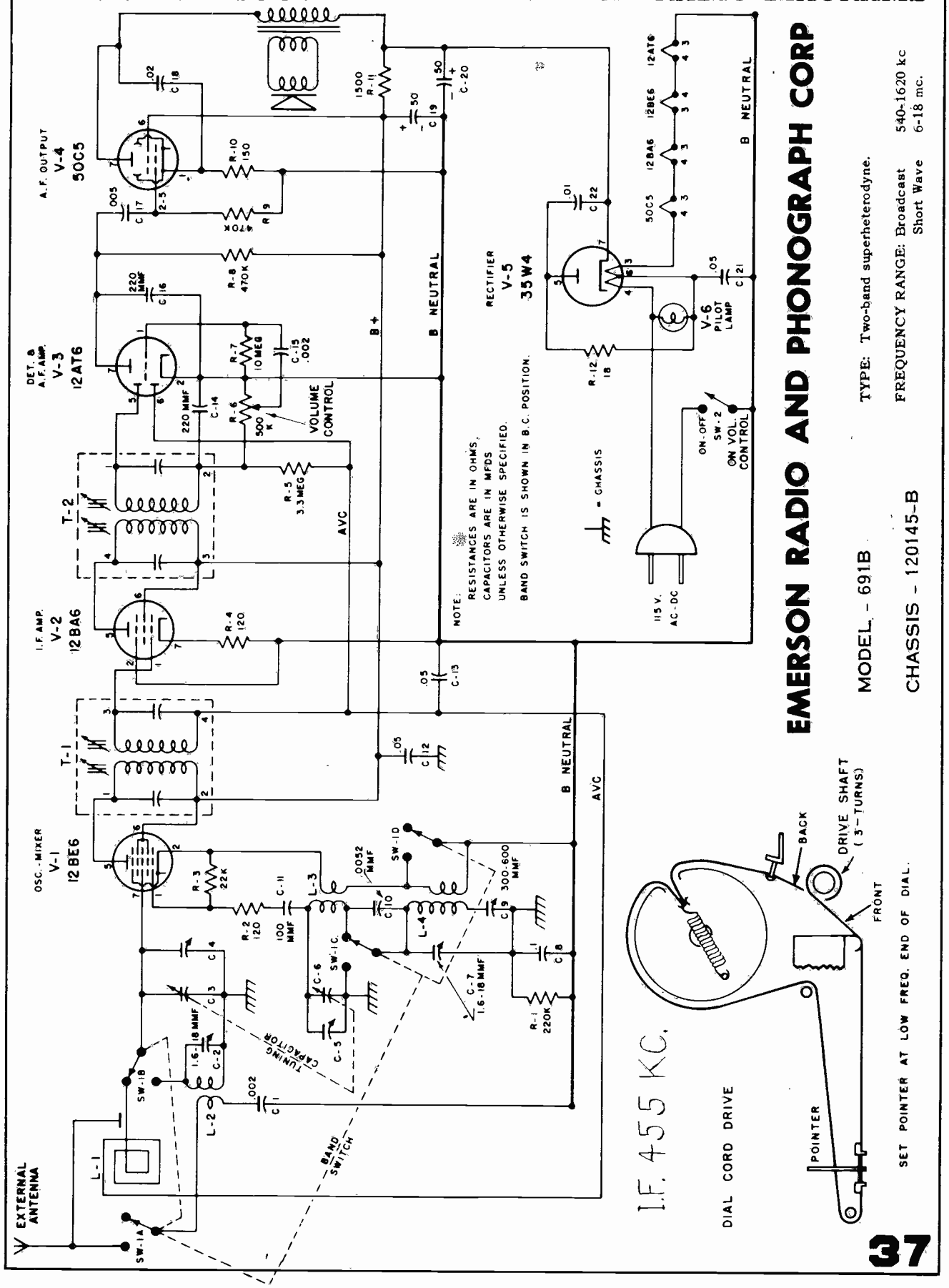
A.F. OUTPUT
V-4
50C5
DET. & A.F. AMP.
V-3
12AT6
I.F. AMP.
V-2
12BA6
OSC.-MIXER
V-1
12BE6
RECTIFIER
V-5
35W4
V-6
PILOT LAMP
T-1
T-2
R-1 220K
R-2 120
R-3 22K
R-4 120
R-5 3.3 MEG
R-6 500 K
R-7 10 MEG
R-8 470K
R-9 470K
R-10 150
R-11 1500
R-12 18
C-1 .002
C-2 1.6-18 MMF
C-3
C-4
C-5
C-6
C-7 1.6-18 MMF
C-8
C-9 300-600 MMF
C-10 .0052 MMF
C-11 100 MMF
C-12 .05
C-13 .05
C-14 220 MMF
C-15 .002
C-16 220 MMF
C-17 .005
C-18 .02
C-19 50
C-20 50
C-21 .05
C-22 .01
L-1
L-2
L-3
L-4
SW-1A
SW-1B
SW-1C
SW-1D
SW-2
ON-OFF
ON VOL. CONTROL
VOLUME CONTROL
AVC
B+
B NEUTRAL
CHASSIS
115 V. AC-DC
EXTERNAL ANTENNA
TUNING CAPACITOR
BAND SWITCH
NOTE:
RESISTANCES ARE IN OHMS,
CAPACITORS ARE IN MFDS
UNLESS OTHERWISE SPECIFIED.
BAND SWITCH IS SHOWN IN B.C. POSITION.
I.F. 455 KC.
DIAL CORD DRIVE
POINTER
BACK
FRONT
DRIVE SHAFT (3-TURNS)
SET POINTER AT LOW FREQ. END OF DIAL.
EMERSON RADIO AND PHONOGRAPH CORP
MODEL - 691B
CHASSIS - 120145-B
TYPE: Two-band superheterodyne.
FREQUENCY RANGE: Broadcast 540-1620 kc
Short Wave 6-18 mc.

EMERSON RADIO

MODEL — 703B

CHASSIS — 120097—B

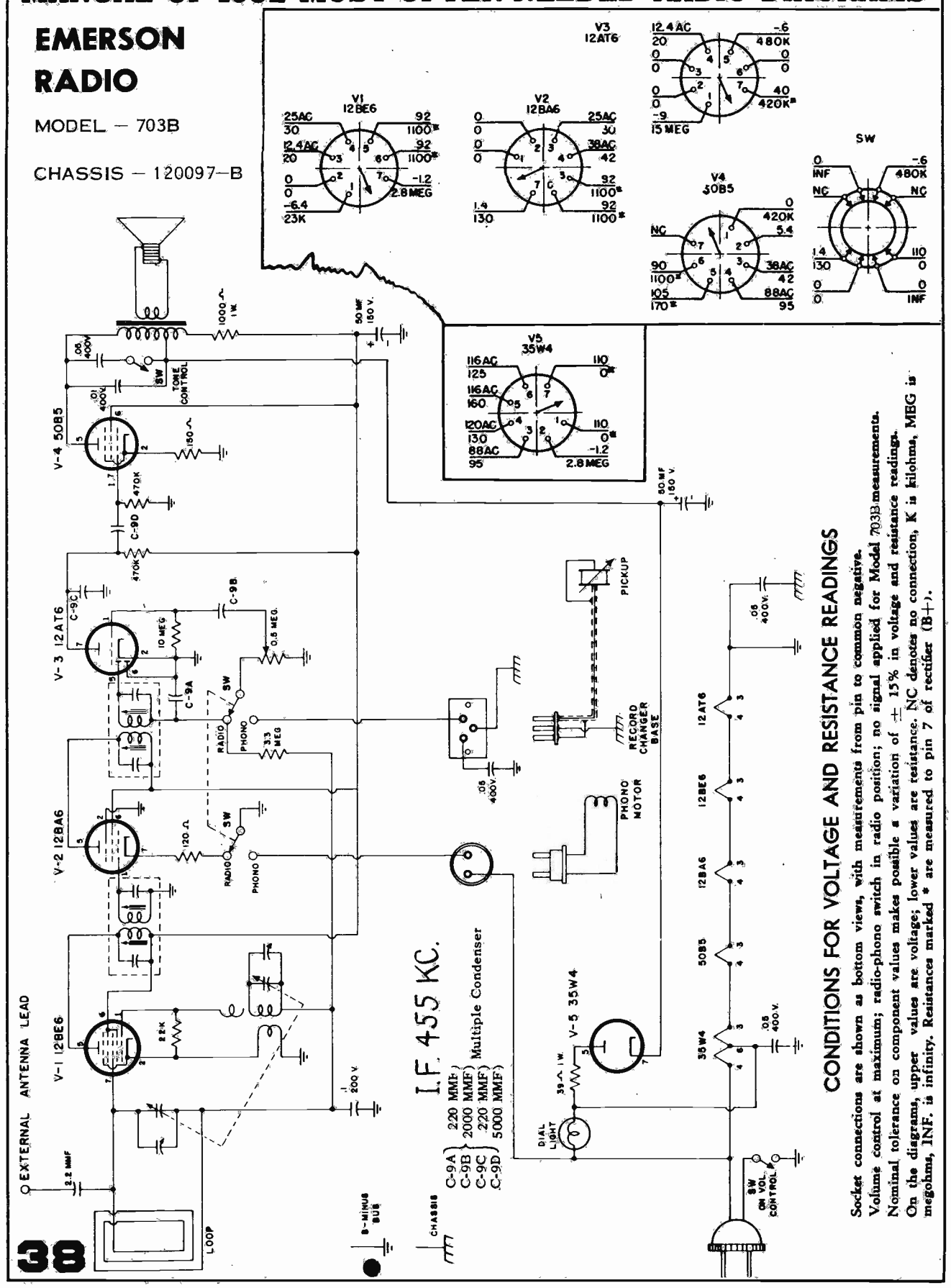

CONDITIONS FOR VOLTAGE AND RESISTANCE READINGS

Socket connections are shown as bottom views, with measurements from pin to common negative.
Volume control at maximum; radio-phono switch in radio position; no signal applied for Model 703B measurements.
Nominal tolerance on component values makes possible a variation of ± 15% in voltage and resistance readings.
On the diagrams, upper values are voltage; lower values are resistance. NC denotes no connection, K is kilohms, MEG is megohms, INF. is infinity. Resistances marked * are measured to pin 7 of rectifier (B+).

EMERSON RADIO

Model 704
Chassis 120154-B

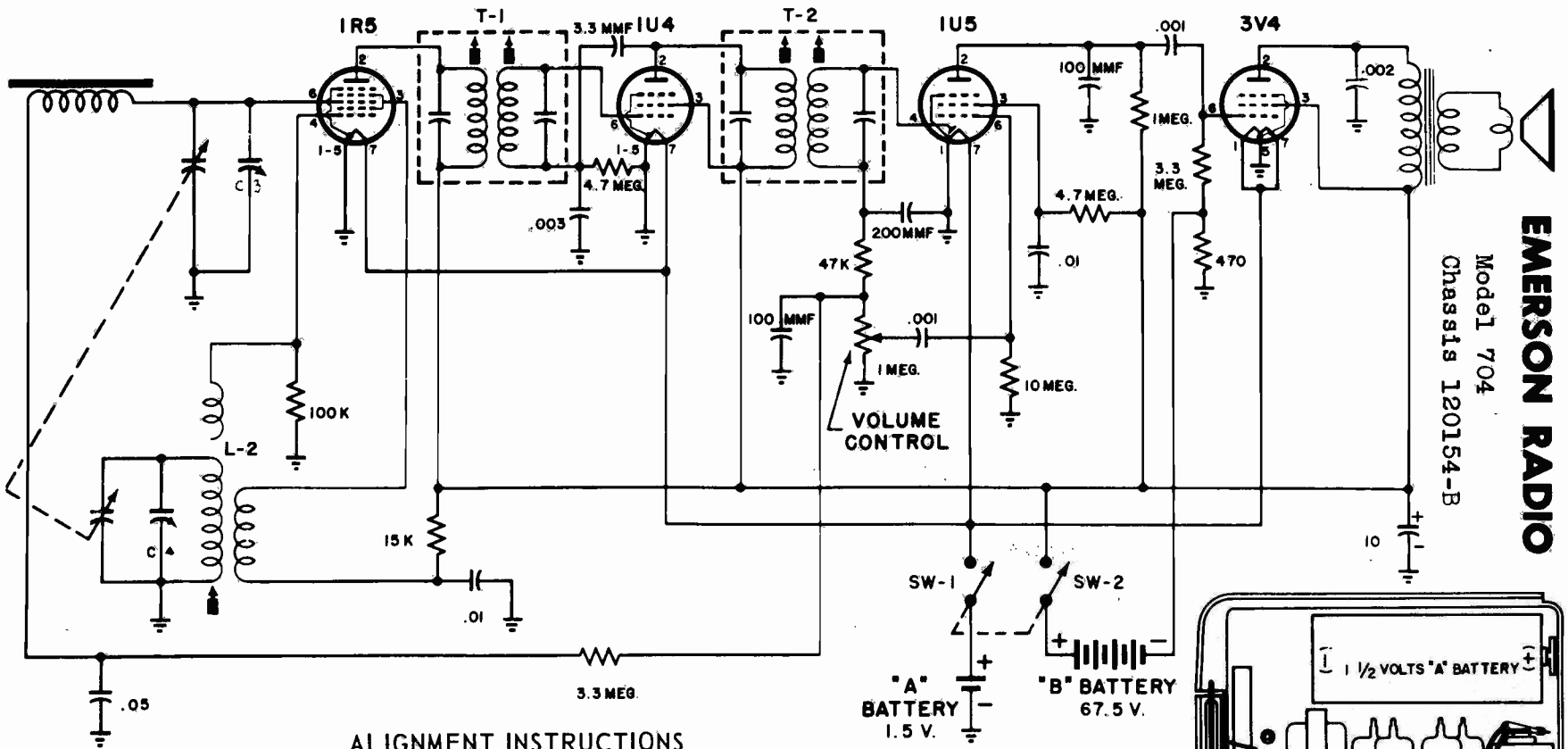

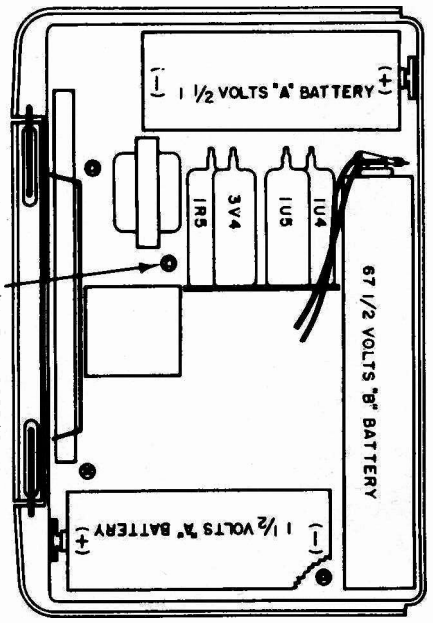

ALIGNMENT INSTRUCTIONS

	DUMMY ANTENNA	SIGNAL GENERATOR COUPLING	SIGNAL GENERATOR FREQUENCY	RADIO DIAL SETTING	OUTPUT METER	ADJUST	REMARKS
1	.1 mfd.	High side to pin 6 (grid) of 1R5. Low side to chassis.	455 KC.	Tuning condenser fully open.	Across voice coil.	T2 and T1	Adjust for maximum output.
2		Loop Ant connected to signal gen. and placed near bar loop ant.	600 KC.	Tuning condenser fully closed.	Across voice coil.	Osc. slug in L-2	Adjust for maximum output.
3		Loop	1620 KC.	Tuning condenser fully open.	Across voice coil.	C4 (osc. trimmer)	Fashion loop of several turns of wire and radiate signal into loop of receiver. Adjust for maximum output.
4		Loop	1400 KC.	Tune for maximum output.	Across voice coil.	C3 (Ant. trimmer)	Adjust for maximum output.

Emerson Radio

MODEL - 706B - 707B

CHASSIS - 120156-B

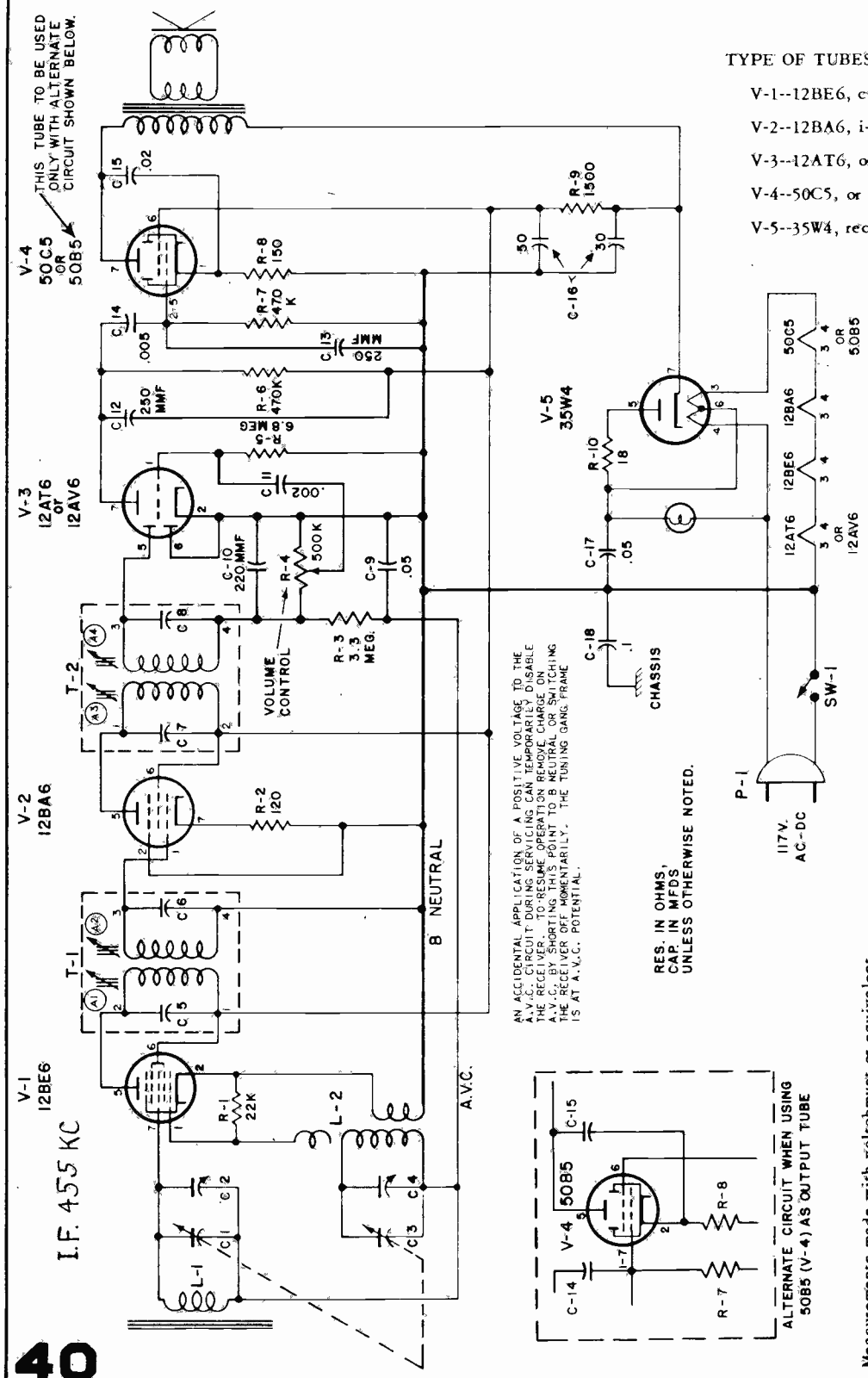

TYPE OF TUBES:

V-1--12BE6, converter

V-2--12BA6, i-f amplifier

V-3--12AT6, or 12AV6, detector, a.v.c. a-f

V-4--50C5, or 50B5 power output

V-5--35W4, rectifier

Measurements made with voltohmyst or equivalent.
Line voltage maintained at 117 volts a.c. for voltage measurements.

VOLTAGE READINGS FOR CHASSIS 120156-B

SYMBOL	TUBE	PIN 1	PIN 2	PIN 3	PIN 4	PIN 5	PIN 6	PIN 7
V-1	12BE6	-7.6	0	12 AC	24 AC	95	95	-.5
V-2	12BA6	0	0	24 AC	36 AC	95	95	1.3
V-3	12AT6 ⊕	-1	0	0	12 AC	-.65	0	45
V-4	50C5 $	0	0	36 AC	85 AC	0	95	120
V-5	35W4	6.5	N.C.	85 AC	117 AC	110 AC	112 AC	130

⊕ In some models 12AV6 may be used as alternate for 12AT6.

$ The 50C5 may be substituted with a 50B5 but only when the alternate circuit is used shown in schematic diagram.

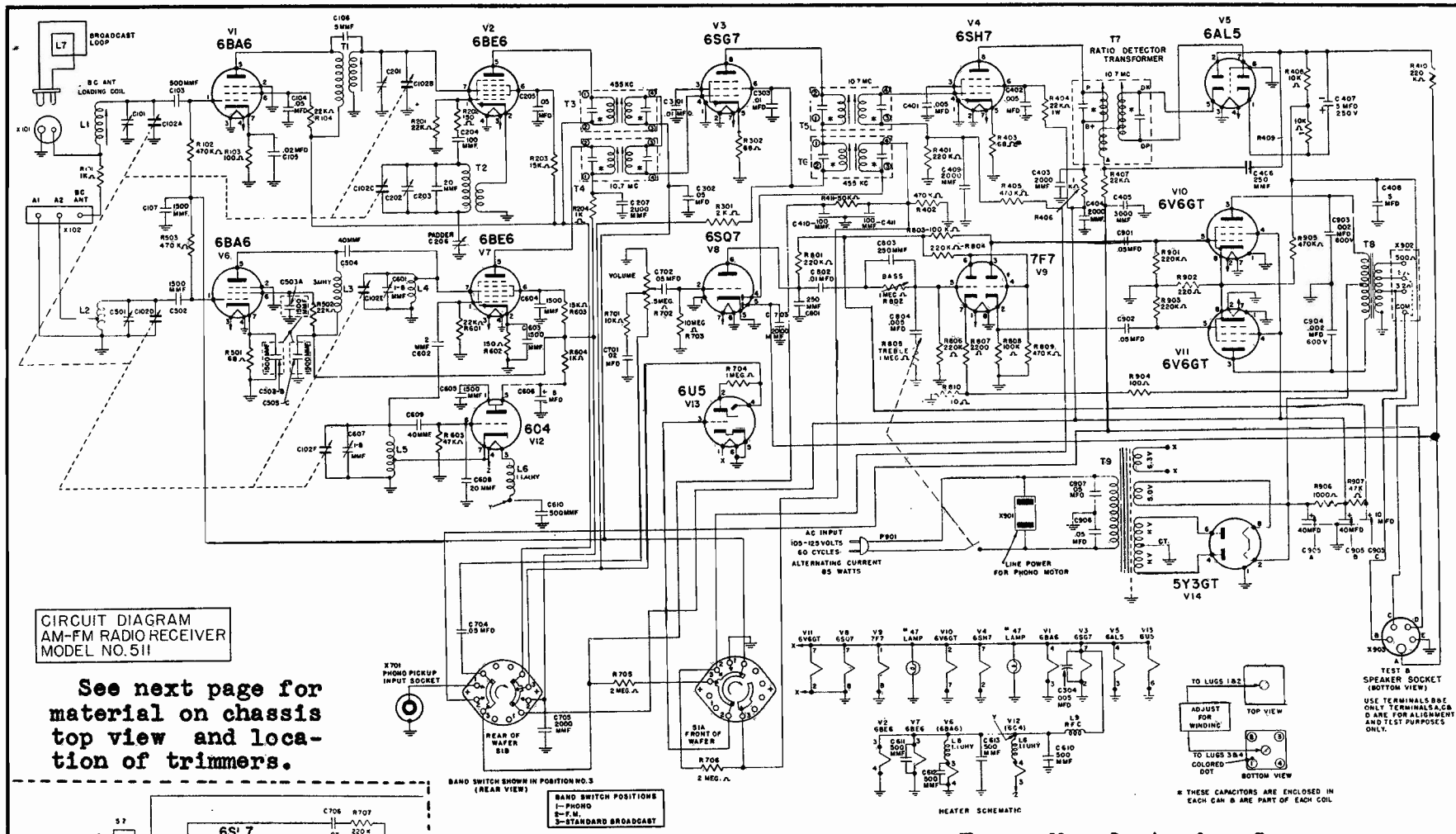

See next page for material on chassis top view and location of trimmers.

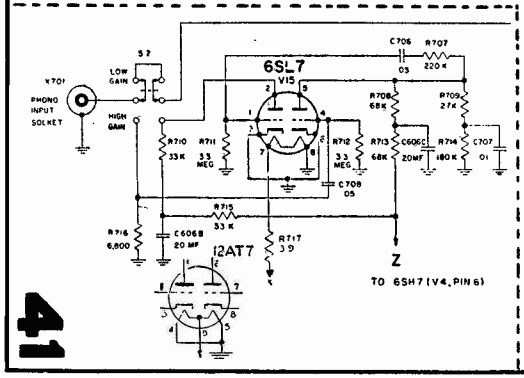

The Tuning Ranges are:

AM 525 kc to 1720 kc

FM 88 mc to 108 mc

Espey Manufacturing Co.

MODEL 511

AM-FM RECEIVER

Newer Model 511-C contains a pre-amplifier circuit shown separately at left, bottom of page; and the tuning-eye tube 6U5 is omitted.

Espey Mfg. Co.
Model 511

See previous page for the circuit drawing of this radio set.

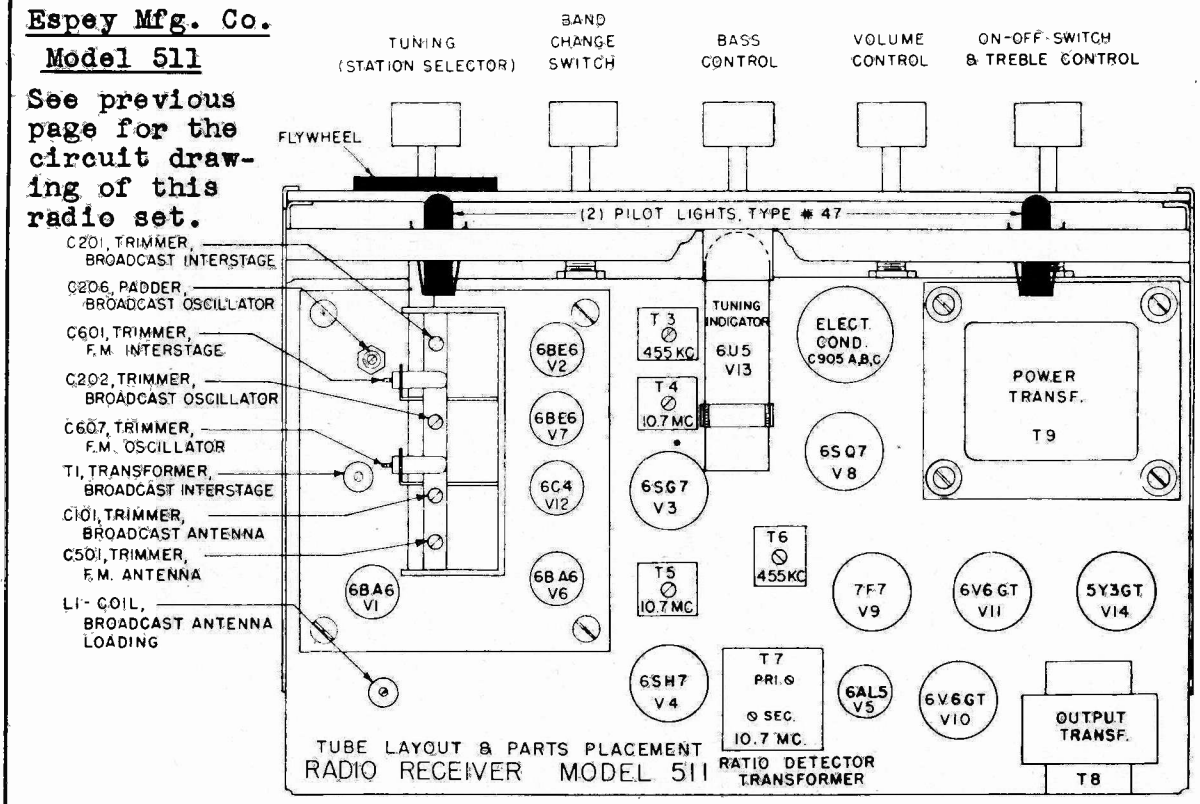

Espey Mfg.
Model 7-C

See next page for circuit diagram.

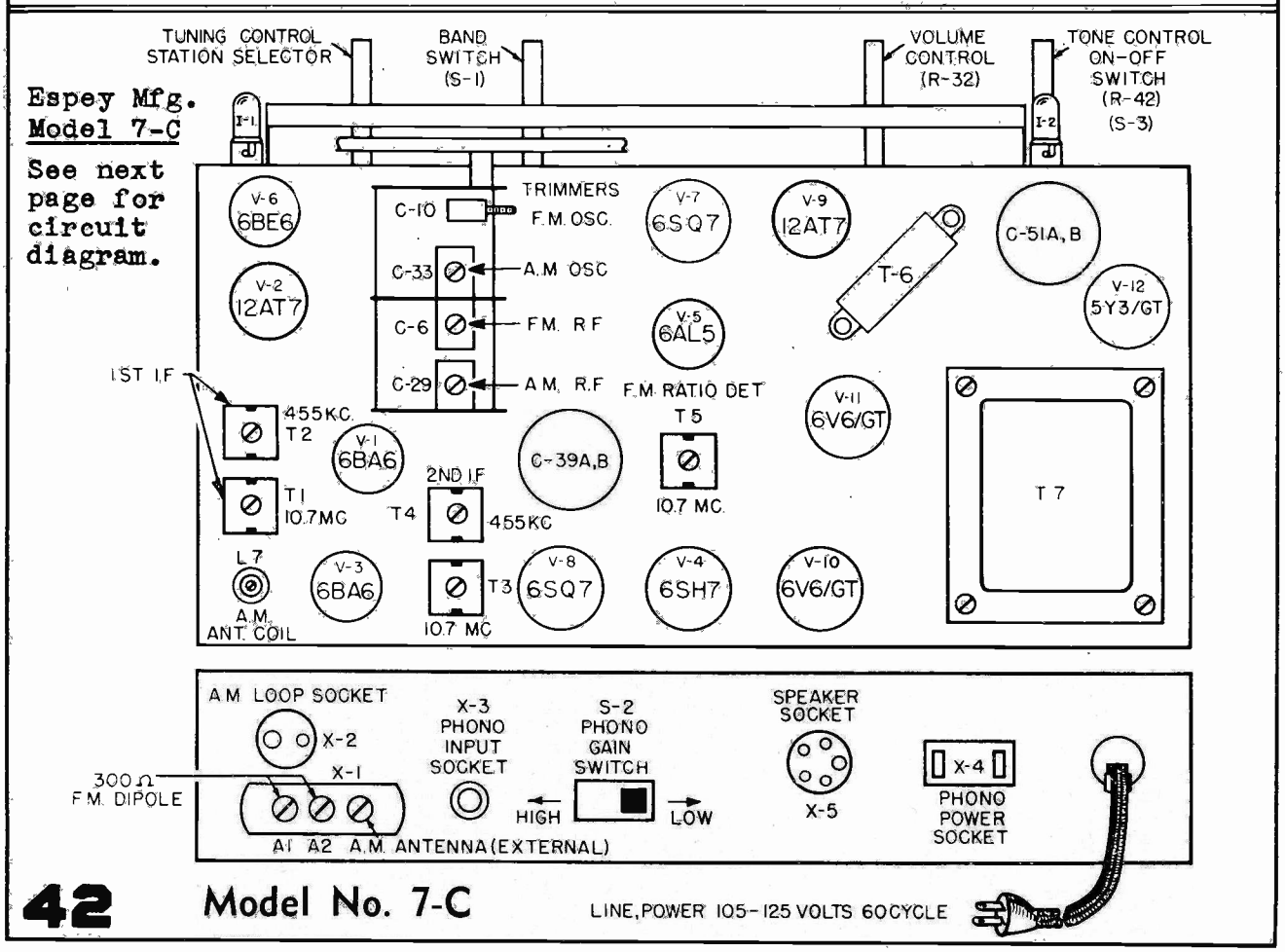

Model No. 7-C

LINE, POWER 105-125 VOLTS 60 CYCLE

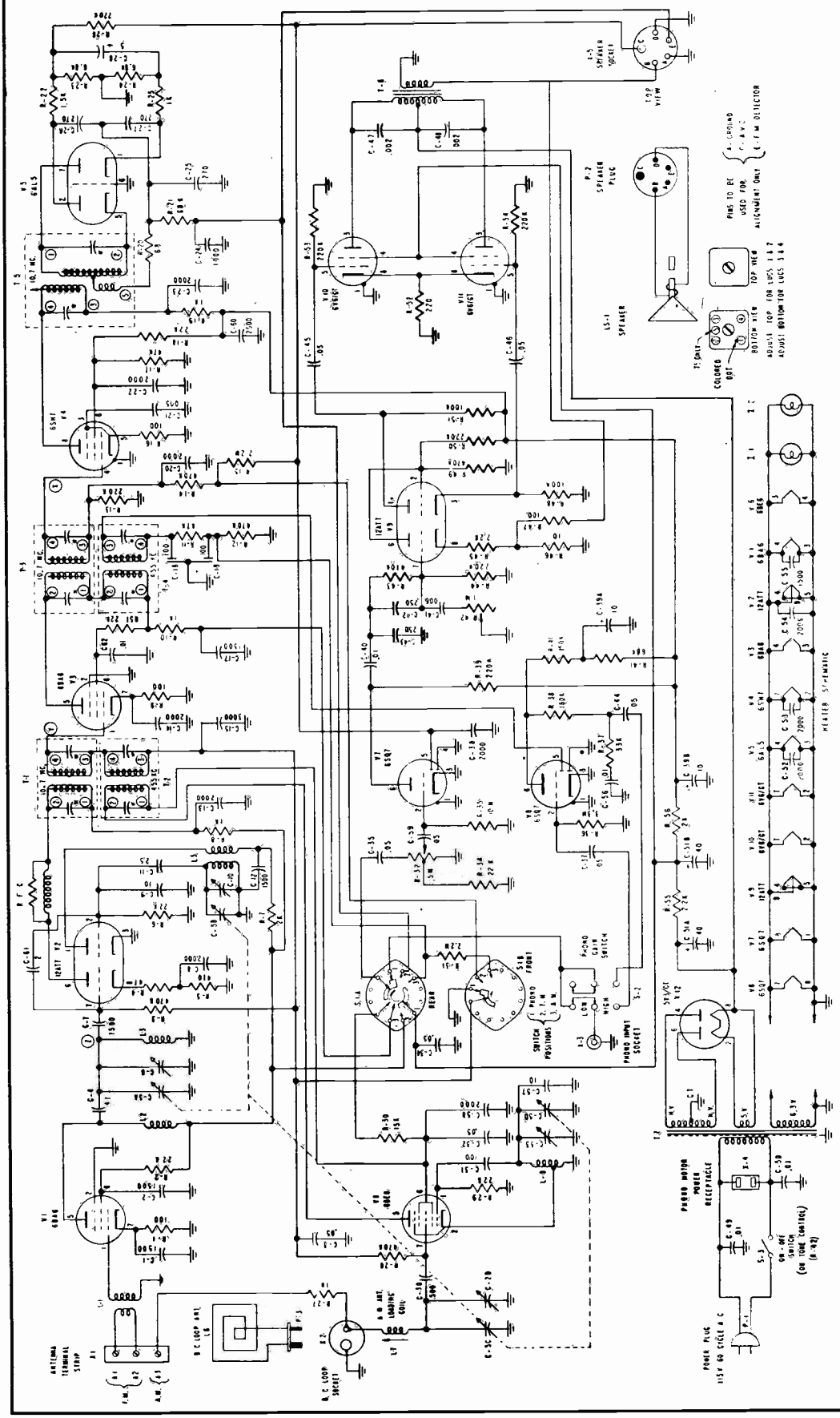

ESPEY MANUFACTURING CO., Inc.

MODEL 7C

AM-FM RECEIVER

The tuning ranges are:

A.M.—535 Kc. to 1720 Kc.

F.M.—88 Mc. to 108 Mc.

See lower part of previous page for a drawing of Model 7-C chassis top view showing tube and parts placement and trimmer locations.

Esquire RADIO CORPORATION

MODEL 511

Clock-Controlled Radio

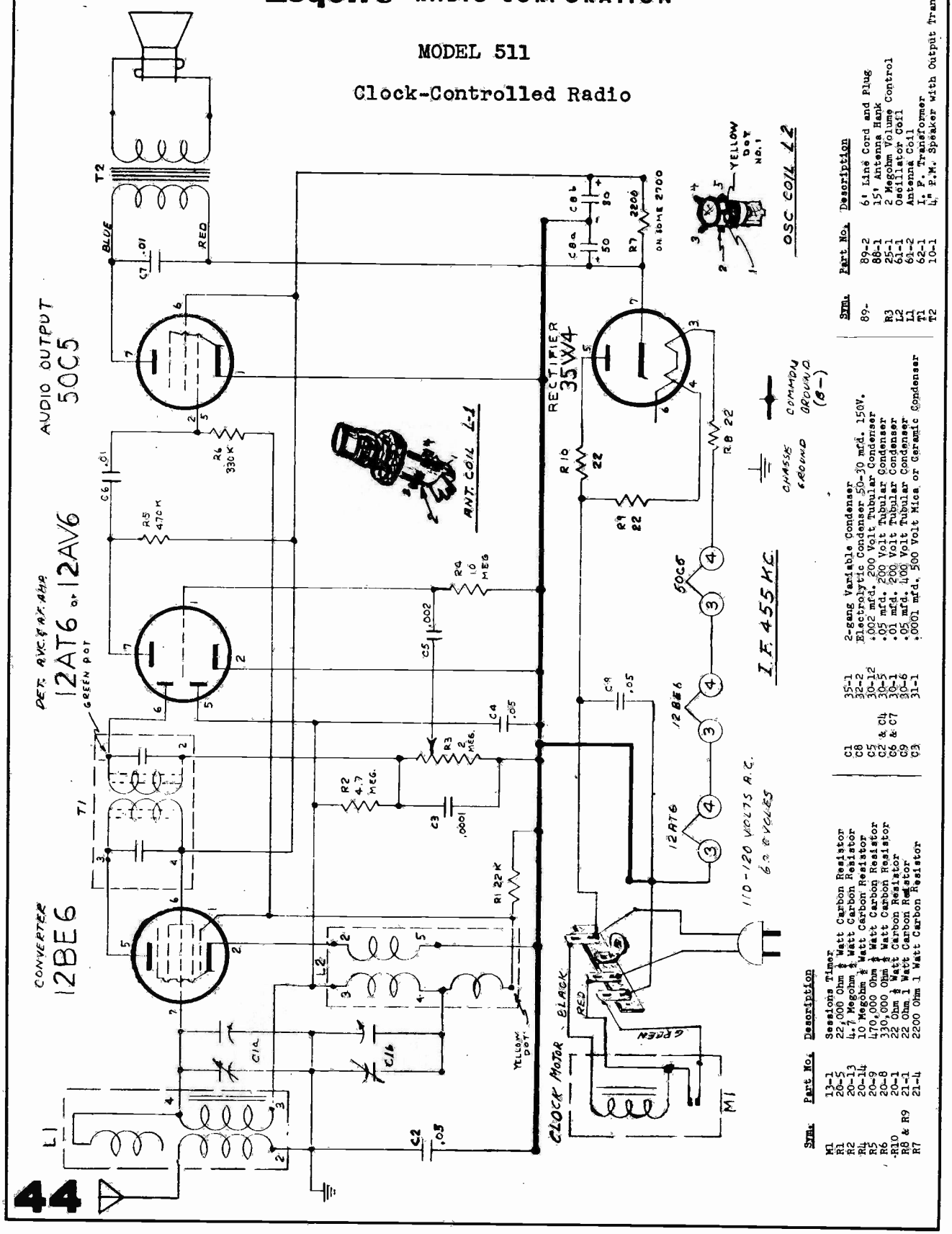

Sym.	Part No.	Description
M1	13-1	Sessions Timer
R1	20-5	22,000 Ohm ½ Watt Carbon Resistor
R2	20-13	4.7 Megohm ½ Watt Carbon Resistor
R4	20-14	10 Megohm ½ Watt Carbon Resistor
R5	20-9	470,000 Ohm ½ Watt Carbon Resistor
R6	20-8	330,000 Ohm ½ Watt Carbon Resistor
R10	20-1	22 Ohm ½ Watt Carbon Resistor
R8 & R9	21-1	22 Ohm 1 Watt Carbon Resistor
R7	21-4	2200 Ohm 1 Watt Carbon Resistor

Sym.	Part No.	Description
C1	35-1	2-gang Variable Condenser
C8	32-2	Electrolytic Condenser 50-30 mfd. 150V.
C5	30-12	.002 mfd. 200 Volt Tubular Condenser
C2 & C4	30-5	.05 mfd. 200 Volt Tubular Condenser
C6 & C7	30-1	.01 mfd. 200 Volt Tubular Condenser
C9	30-6	.05 mfd. 400 Volt Tubular Condenser
C3	31-1	.0001 mfd. 500 Volt Mica or Ceramic Condenser

Sym.	Part No.	Description
89-	89-2	6' Line Cord and Plug
	86-1	15' Antenna Hank
R3	25-1	2 Megohm Volume Control
L2	61-1	Oscillator Coil
L1	61-2	Antenna Coil
T1	62-1	I. F. Transformer
T2	10-1	4" P.M. Speaker with Output Transformer

FADA RADIO 845 SERIES

Tube substitution was used in some models and is indicated on the tube layout label of such sets. Two 6BJ6 were used for 12BA6 tubes with the connections to pins #2 and #7 reversed. Type 50B5 tube was used in place of 35B5. A red letter "A" stamped on the rear of the loop antenna indicates that a 50C5 tube is used instead of 35B5 with necessary changes in socket connections.

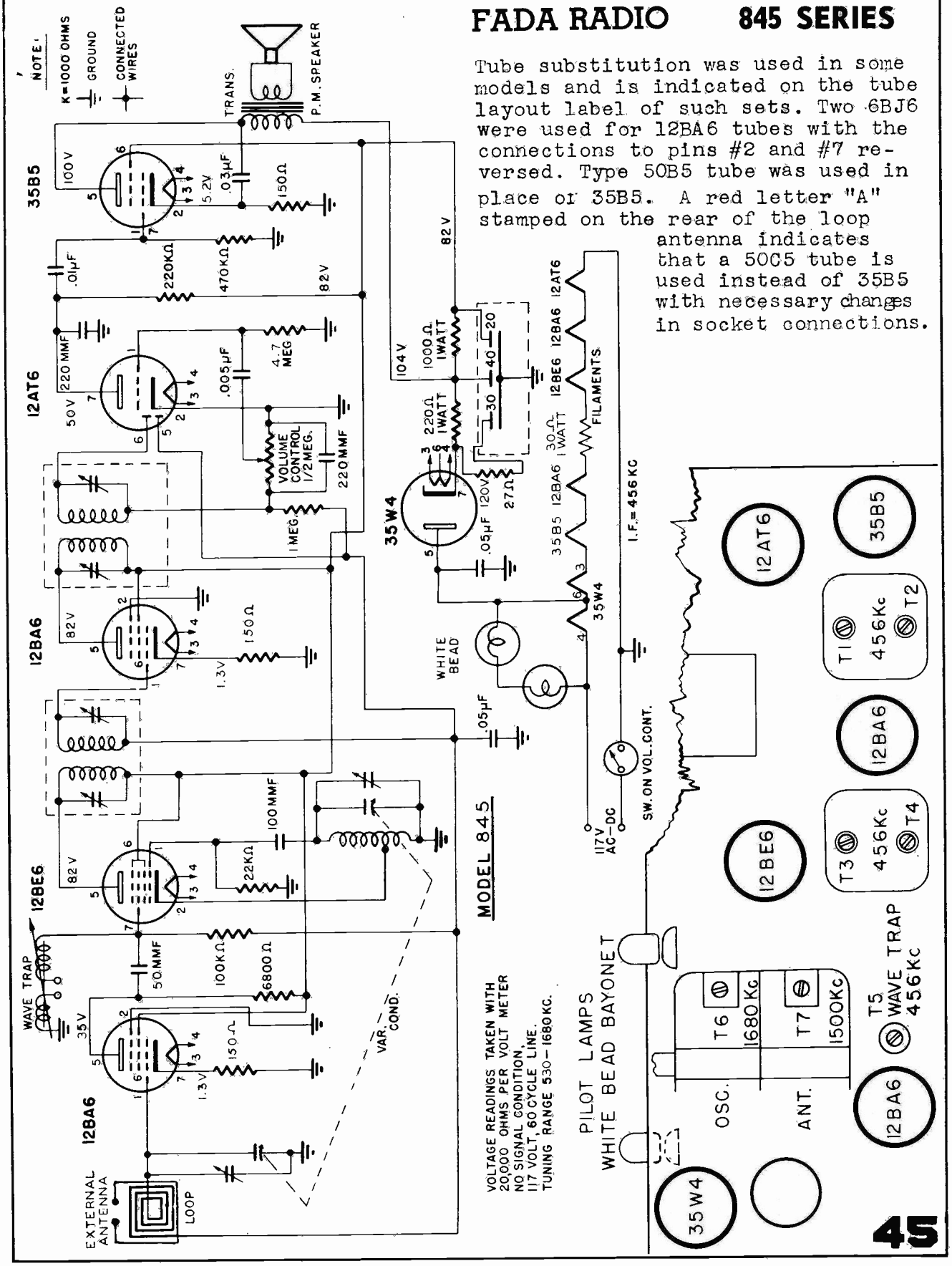

FADA RADIO Model 777

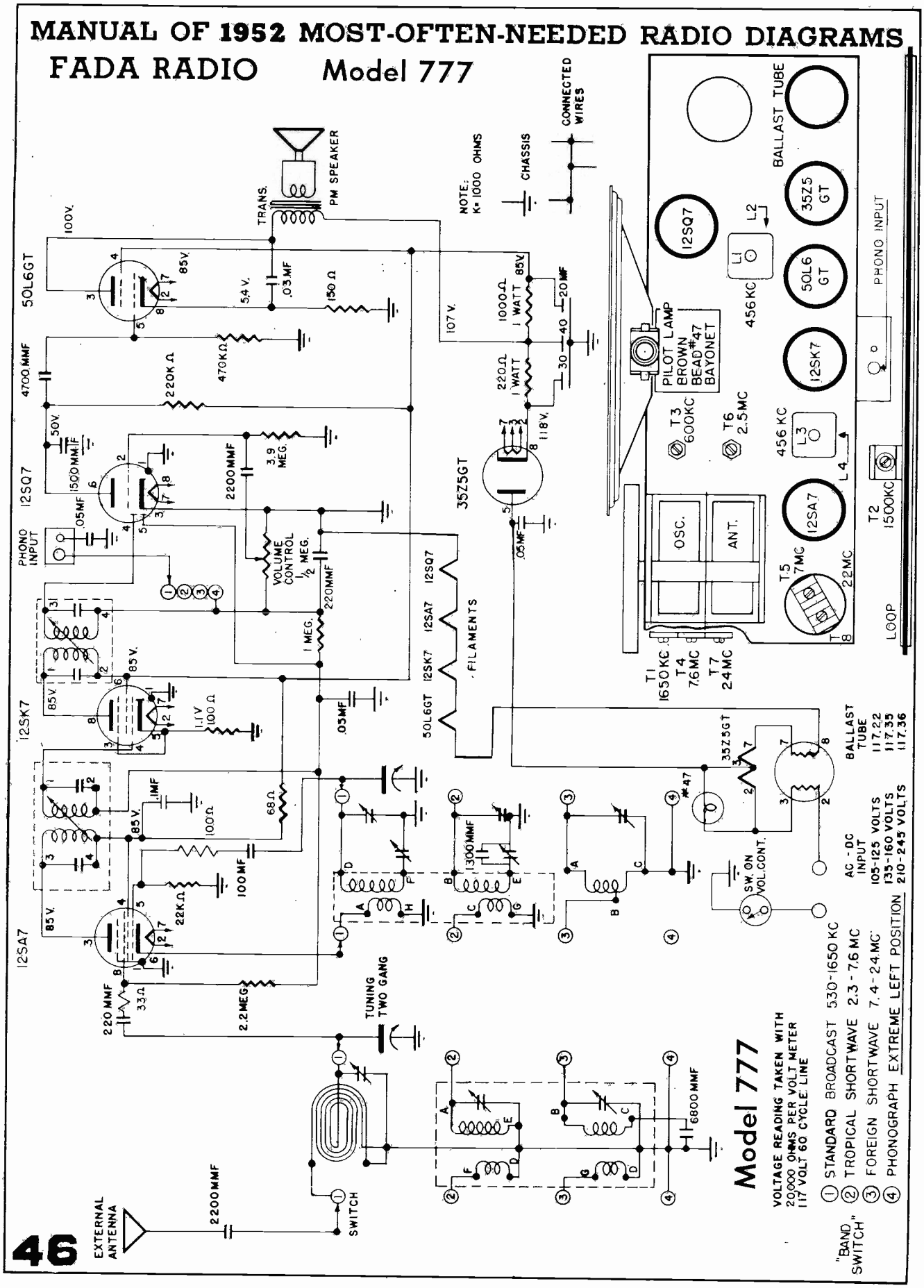

FADA RADIO 855 SERIES

Power consumption: 30 Watts
Frequency Range: 530-1680 KC
I.F. Circuits: 456 KC

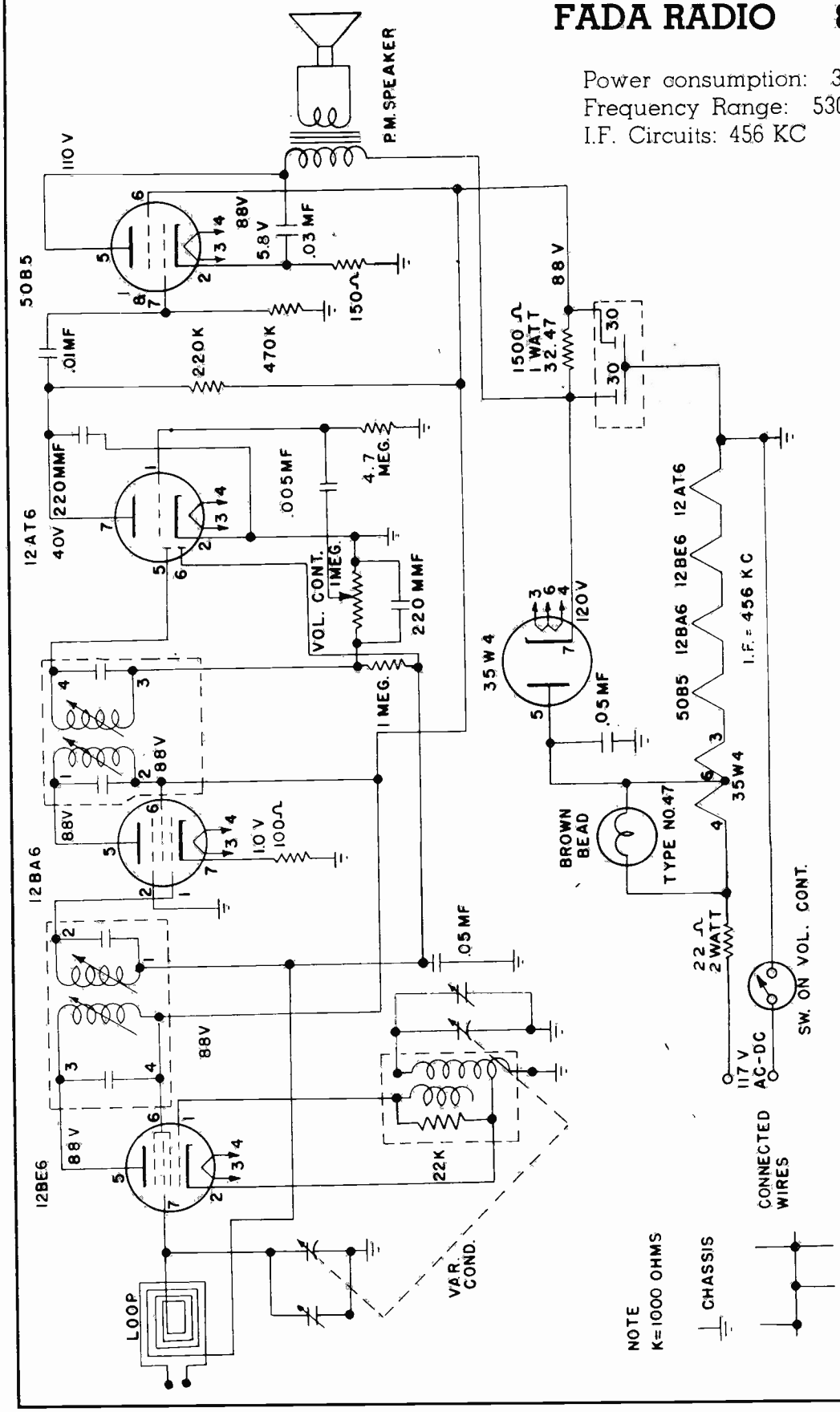

Sets with a red letter "A" stamped on the rear of the loop antenna indicates that a 50C5 tube has been substituted for the 50B5 tube. This substitution requires the following changes in the socket connections:

Pin #2 to #1, #5 to #7, #1-7 to #2-5.

VOLTAGE READINGS TAKEN WITH 20,000 OHMS PER VOLT METER
117 VOLT 60 CYCLE LINE
TUNING RANGE 530-1680 KC

MODEL 855
SCHEMATIC
FADA RADIO & ELECTRIC CO. INC.

FADA RADIO MODEL 790

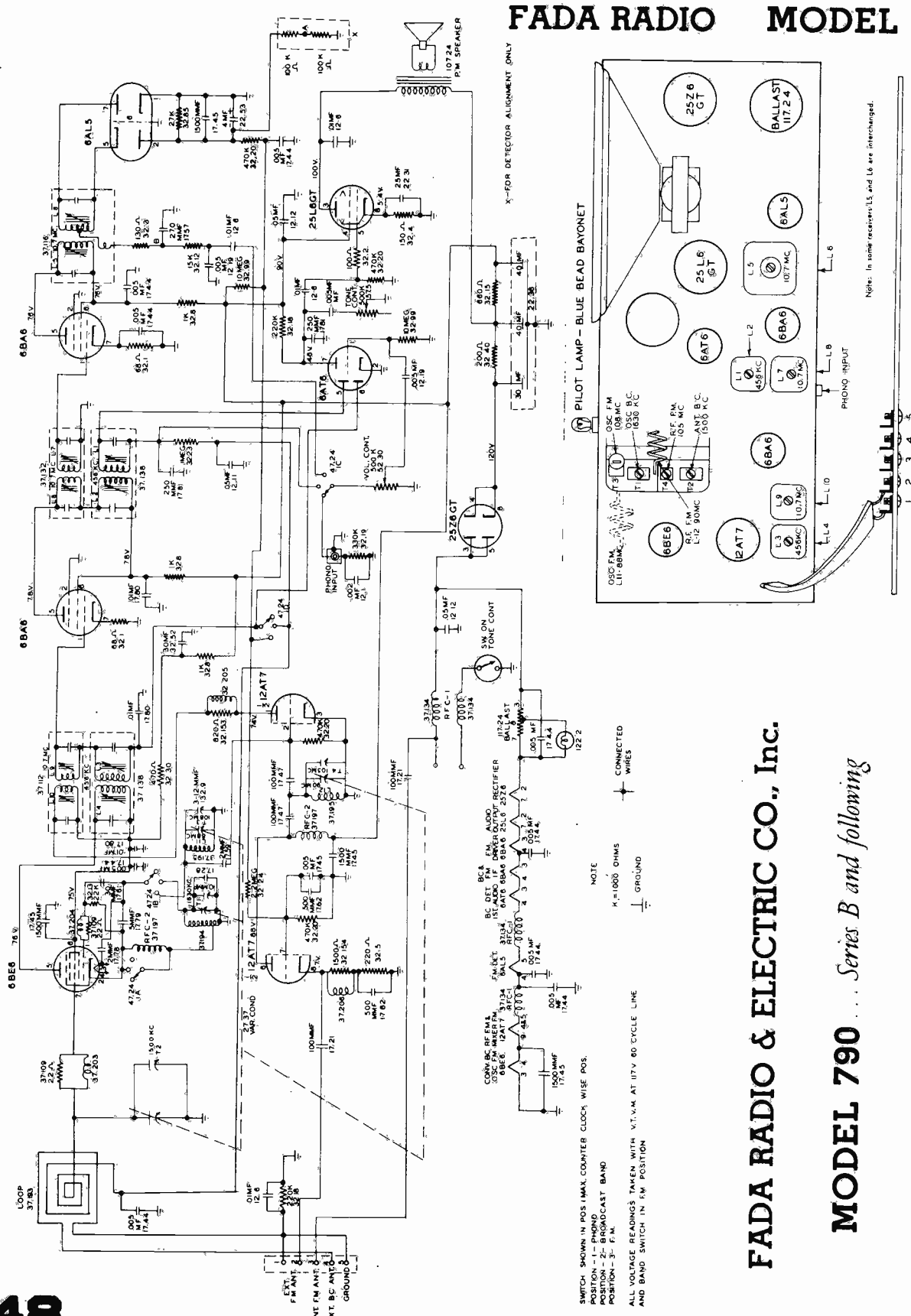

FADA RADIO & ELECTRIC CO., Inc.

MODEL 790 . . . *Series B and following*

Frequency Range: Standard Broadcast—535-1630 KC
FM—87.5-108.5 MC

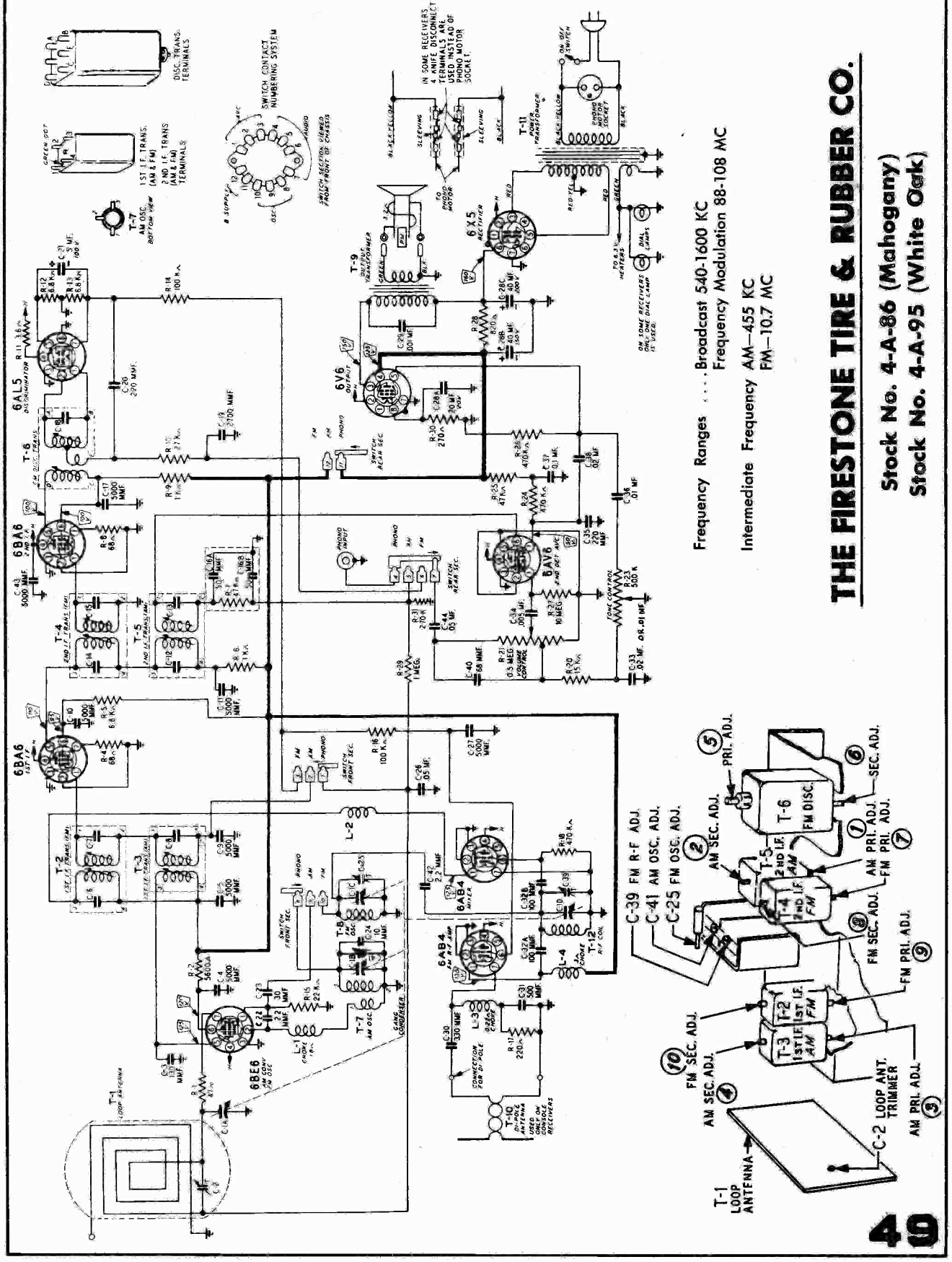

Frequency Ranges . . . . Broadcast 540-1600 KC
Frequency Modulation 88-108 MC

Intermediate Frequency AM—455 KC
FM—10.7 MC

THE FIRESTONE TIRE & RUBBER CO.

Stock No. 4-A-86 (Mahogany)
Stock No. 4-A-95 (White Oak)

MANUAL OF 1952 MOST-OFTEN-NEEDED RADIO DIAGRAMS

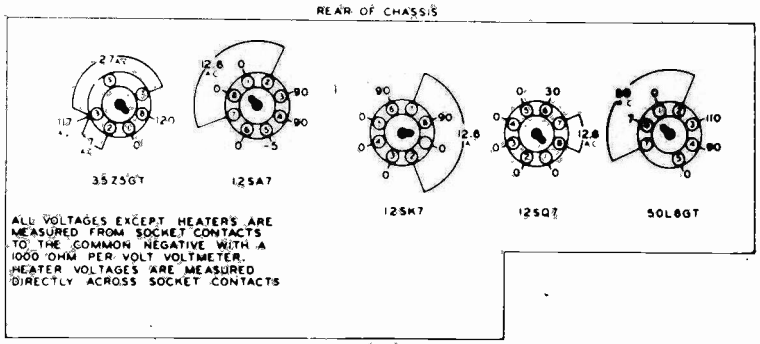

VOLTAGE TABLE
(BOTTOM VIEW OF CHASSIS)

FIRESTONE TIRE

Stock No 4-A-92

Tuning Range - 540 to 1600 KC
Intermediate Freq. - 455 KC
Loud Speaker - 3-1/2" P.M.

ALIGNMENT PROCEDURE

Steps	Set Receiver dial to:	TEST OSCILLATOR: Adjust test oscillator frequency to:	TEST OSCILLATOR: Attach output of test oscillator to:	DUMMY ANTENNA	Refer to parts layout diagram for location of trimmers mentioned below:
1	Any point where no interfering signal is received.	EXACTLY 455 KC	High side to grid of converter Tube. Low side to common negative.	1. MFD CONDENSER	Adjust 2nd I.F. (T2) and then each of the slugs of the 1st I.F. (T1) for maximum output.
2	Exactly 1620 KC	Exactly 1620 KC	DUMMY ANTENNA	2 turns of Hookup Wire 6"in Diam. (Place approx. one foot from & parallel to loop.)	Adjust 1620 KC oscillator trimmer for maximum output.
3	Approx. 1400 KC	Approx. 1400 KC	DUMMY ANTENNA		Adjust 1400 KC antenna trimmer for maximum output.

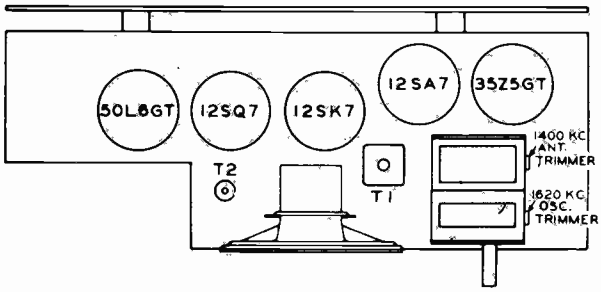

TOP VIEW OF CHASSIS

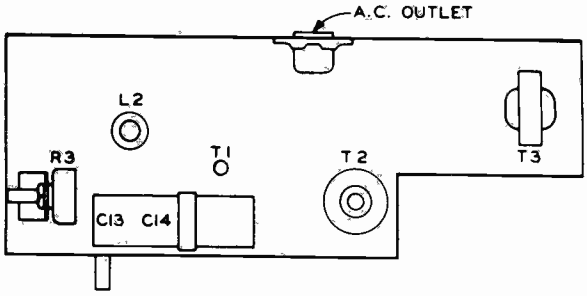

BOTTOM VIEW OF CHASSIS

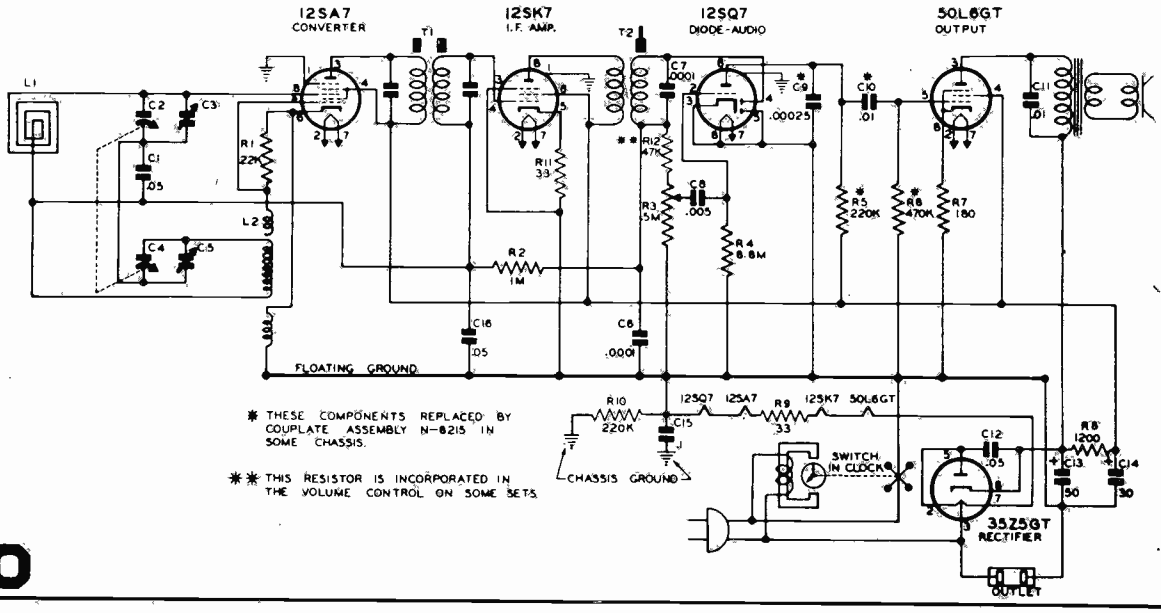

MANUAL OF 1952 MOST-OFTEN-NEEDED RADIO DIAGRAMS

FIRESTONE TIRE & RUBBER CO. Stock Nos. 4-C-19 and 4-C-20.

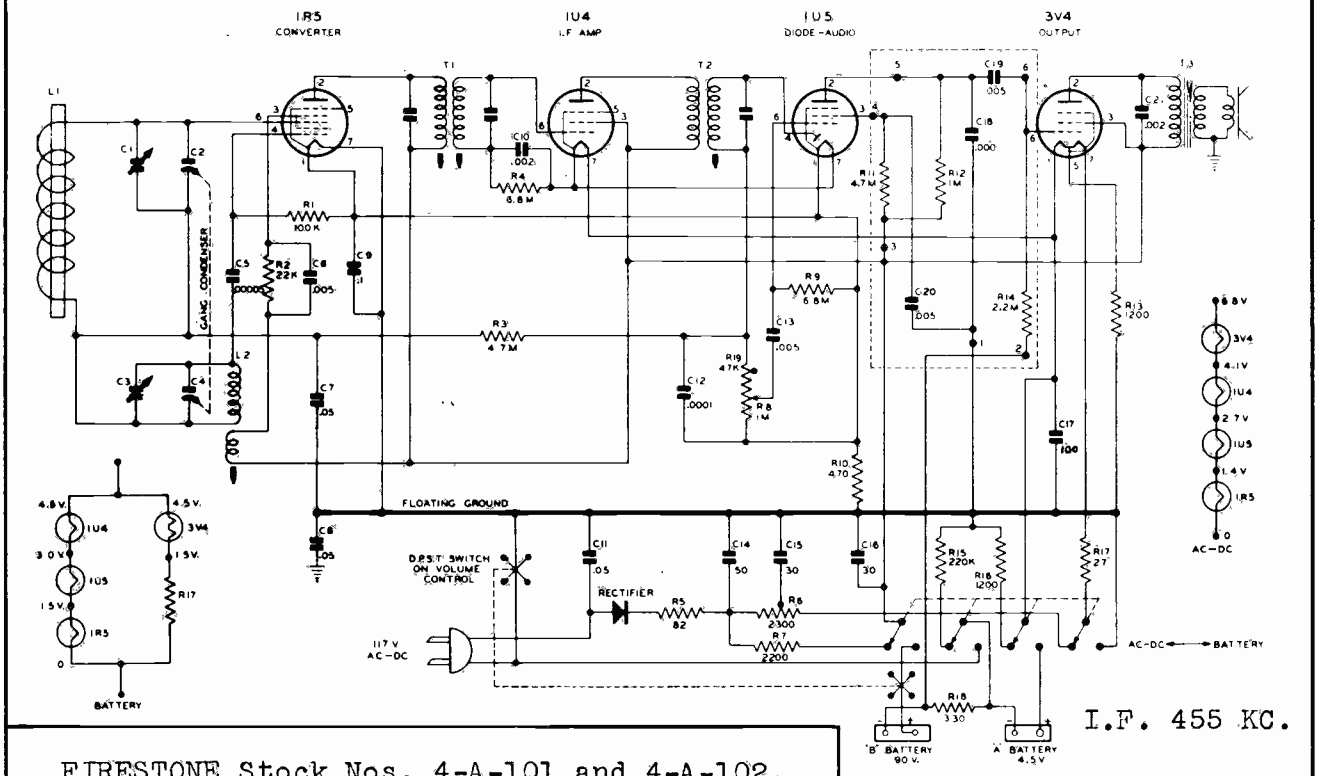

I.F. 455 KC.

FIRESTONE Stock Nos. 4-A-101 and 4-A-102.

I.F. 455 KC.

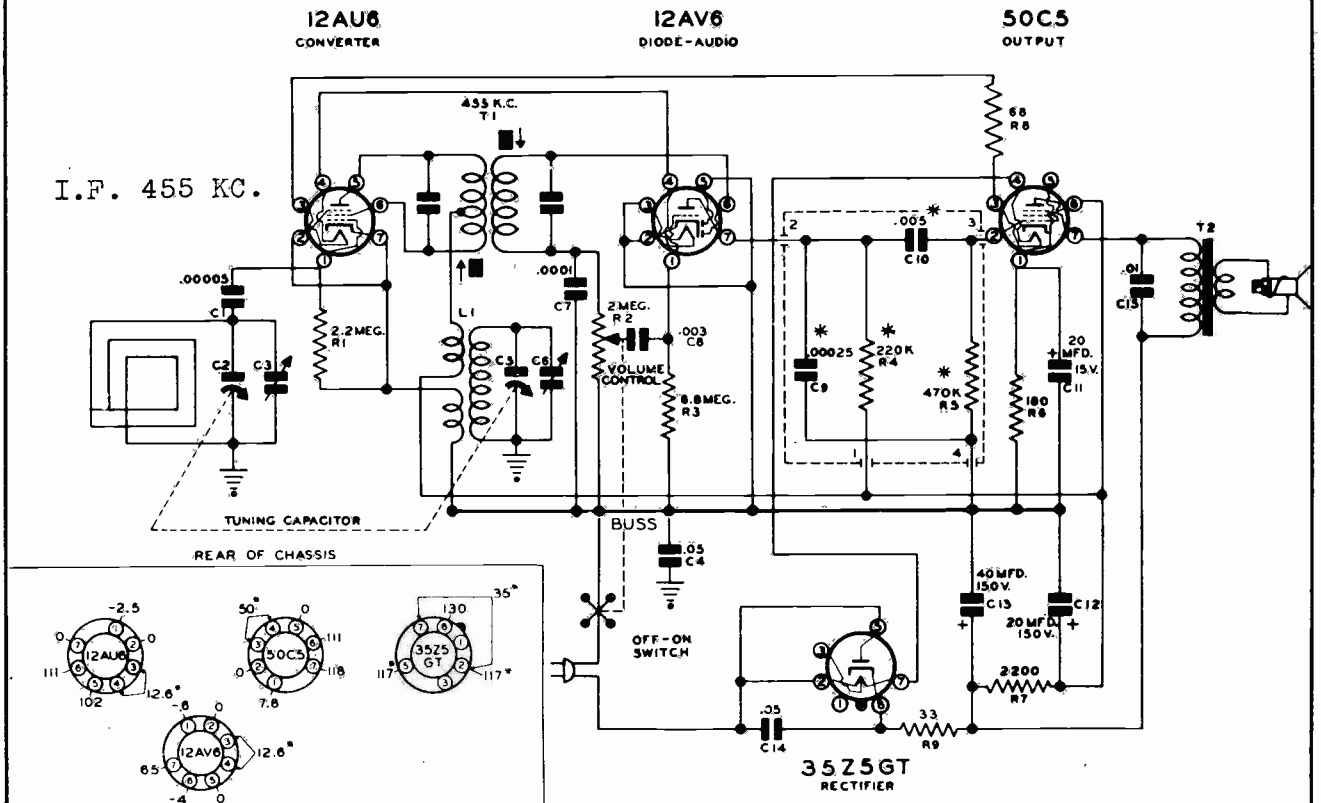

ALL VOLTAGES EXCEPT HEATERS ARE MEASURED FROM SOCKET CONTACTS TO THE COMMON NEGATIVE WITH A 20,000 OHM PER VOLT VOLTMETER. HEATER VOLTAGES ARE MEASURED DIRECTLY ACROSS SOCKET CONTACTS.

* A.C. EXCEPT WHEN SET IS USED ON D.C.

VOLTAGE TABLE
(BOTTOM VIEW OF CHASSIS)

NOTE:

* R4, R5, C9 & C10 MAY BE PART NO. N-8215 AUDIO COUPLATE IN SOME RECEIVERS.

MANUAL OF 1952 MOST-OFTEN-NEEDED RADIO DIAGRAMS

THE FIRESTONE TIRE & RUBBER CO. Stock No. 4-C-21

Power supply ..... 115 to 125 volts AC-DC
or 2 45 volt "B" batteries
and 2 4½ volt "A" batteries

Frequency Range . 538 - 1620 KC.

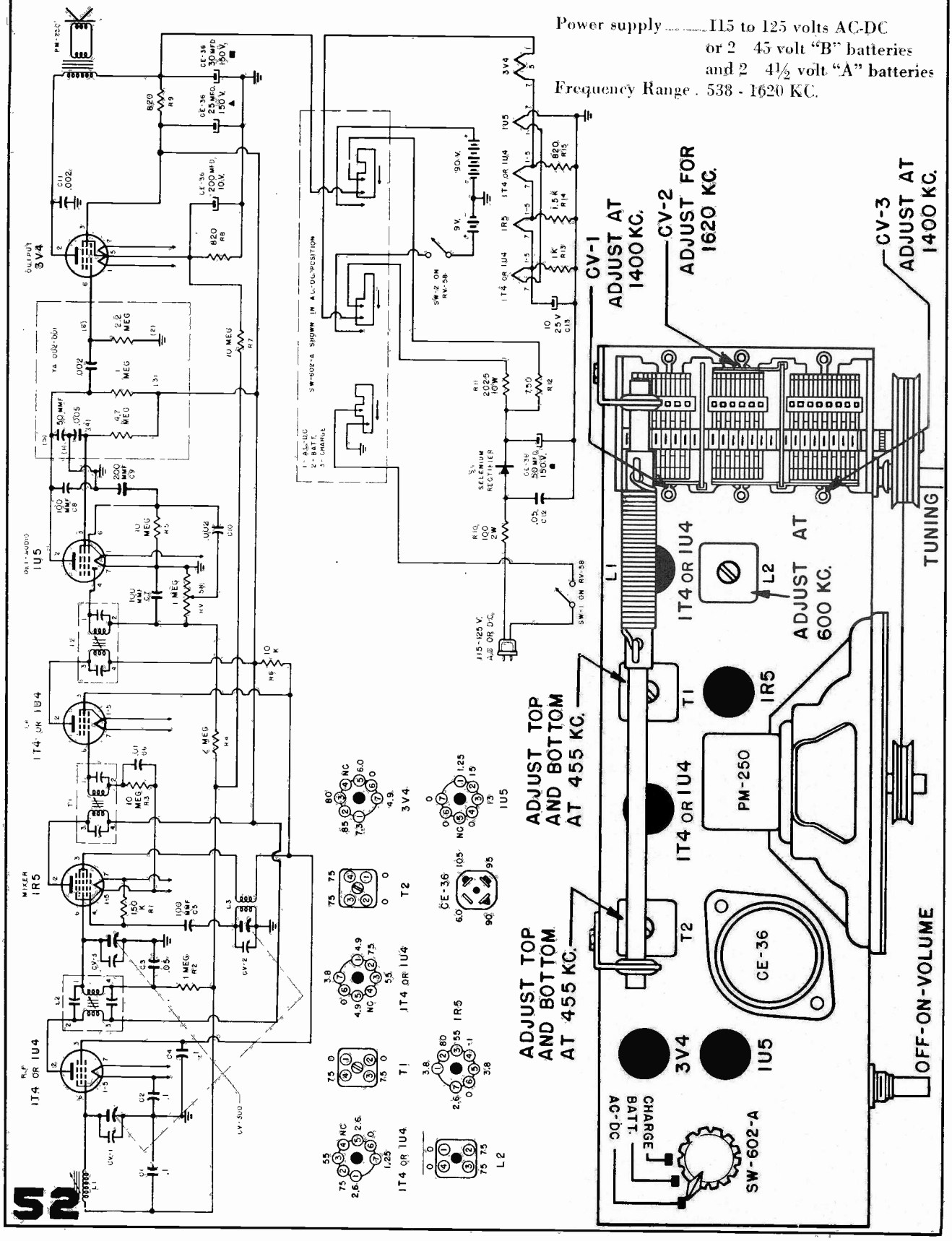

MANUAL OF 1952 MOST-OFTEN-NEEDED RADIO DIAGRAMS

Gamble-Skogmo Inc.

CORONADO RADIO

MODEL 15RA33-43-8365

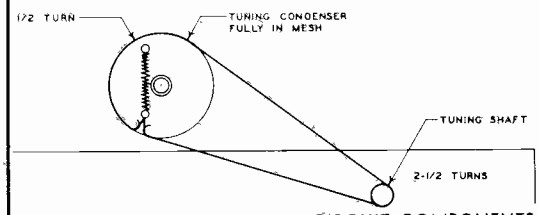

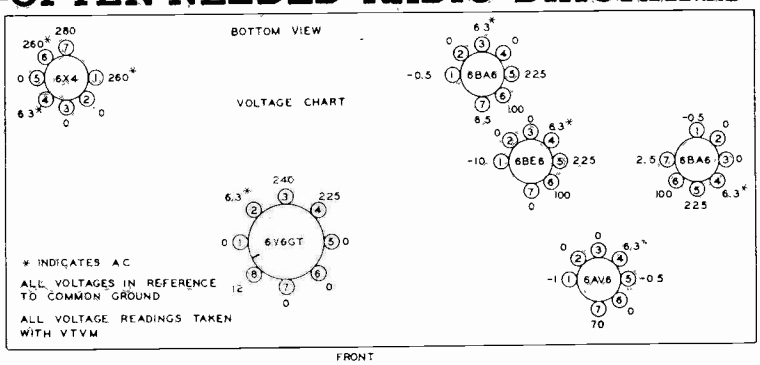

CIRCUIT COMPONENTS

SYMBOL	PART NO.	DESCRIPTION	VALUE	RATING
VC1,2,3,	VCT69	Condenser, 3 gang		
C1,C13	CO52	Condenser, paper	.05 MFD	200 volts
C2	CO54	Condenser, paper	.05 MFD	400 volts
C3,C6,C11	COO56	Condenser, paper	.005 MFD	600 volts
C4	C2505M	Condenser, mica	250 MMFD	500 volts
C5	CO26	Condenser, paper	.02 MFD	600 volts
C7	C20-T69	Condenser, electrolytic	20 MFD	25 volts
C8	C20-T69	Condenser, electrolytic	20 MFD	350 volts
C9	C20-T69	Condenser, electrolytic	20 MFD	350 volts
C10	C20-T69	Condenser, electrolytic	20 MFD	350 volts
C12	CO476M	Condenser, paper, plastic case	.047 MFD	600 volts
R1	R182.5	Resistor	1800 ohm	1/2 watt
R2	R223.5	Resistor	22 K ohm	1/2 watt
R3	R391.5	Resistor	390 ohm	1/2 watt
R4	R1232	Resistor	12 K ohm	2 watt
R5,R12	R105.5	Resistor	1 megohm	1/2 watt
R6	R106.5	Resistor	10 megohm	1/2 watt
R7,R8	R474.5	Resistor	470 K ohm	1/2 watt
R9	R3311	Resistor	330 ohm	1 watt
R10	R1021	Resistor	1000 ohm	1 watt
R11	R4711	Resistor	470 ohm	1 watt
VR1	VRT69	Volume Control	1 megohm	
VR2	VRT69	Tone Control	1 megohm	
E1	CR1	Diode filter unit	2 x 100 MMFD-47 K ohm	
LA	LAT69	Antenna rod & back		
LR	LRT69	R.F. Coil		
LO	T64LO	Oscillator Coil		
T1-T2	T111-31-A	I.F. transformer		
T3	L3595	Output transformer		
T4	XL-60	Power transformer		
SW1	VRT69	Switch S.P.S.T. on volume control		
SW2	SS-3	Switch D.P.D.T. for phono		
SPKR	SPKT69	Speaker P.M. 5 x 7		

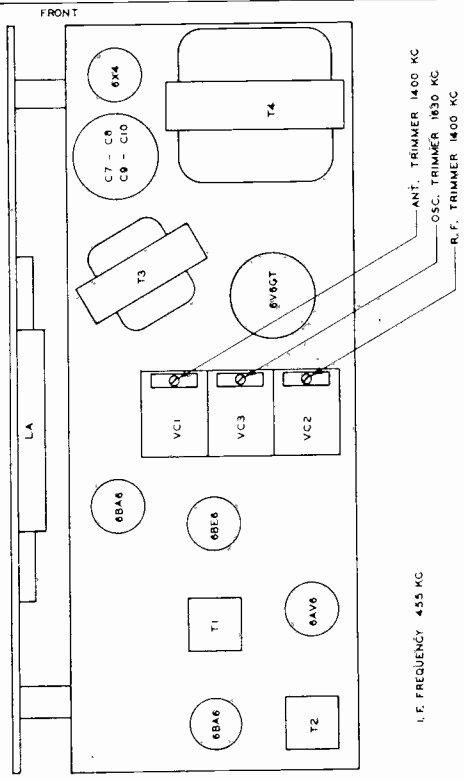

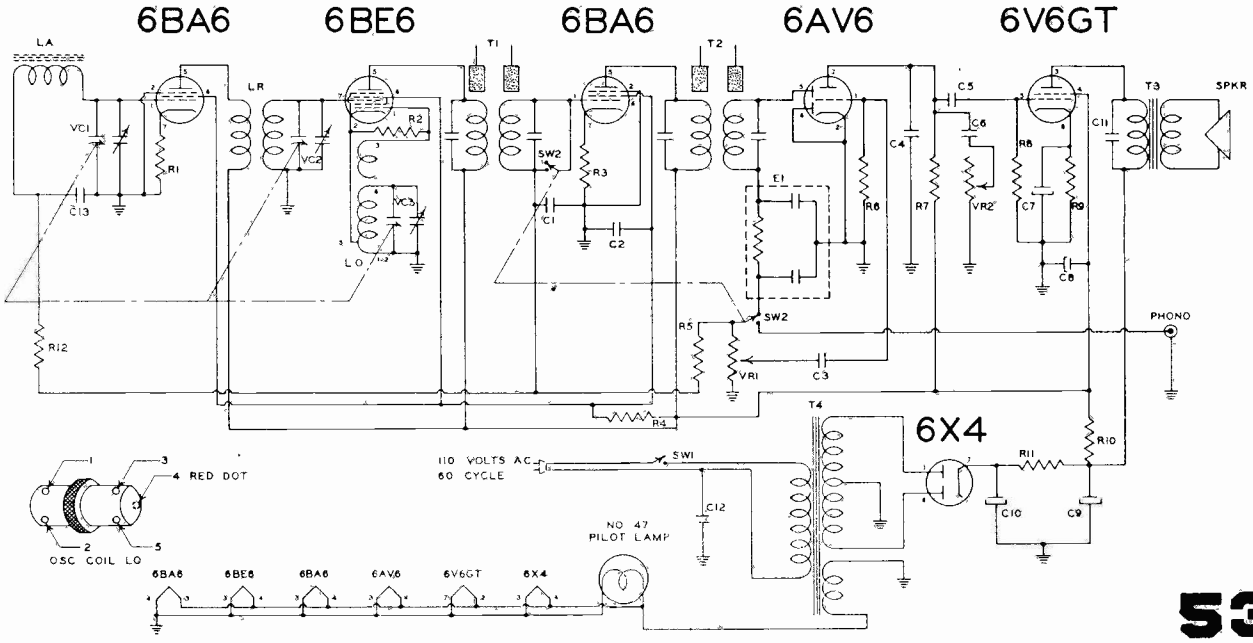

Gamble-Skogmo Inc.
Minneapolis, Minn.

CORONADO RADIO MODEL 15RA2-43-8230A

POWER SUPPLY..... 115 volts, DC or 50-60 cycle AC, 24 watts.
FREQUENCY RANGE.....540 to 1600 Kc.
INTERMEDIATE FREQ.... 455 Kc.
SELECTIVITY.....At 1000 Kc., 60 Kc. at 1000 x signal.
SENSITIVITY.....150 u. v. per meter.

Model 94RA2-43-8230A is similar to 15RA2-43-8230A, but employs 12BD6 as I.F. Amp. and 35W4 as the rectifier.

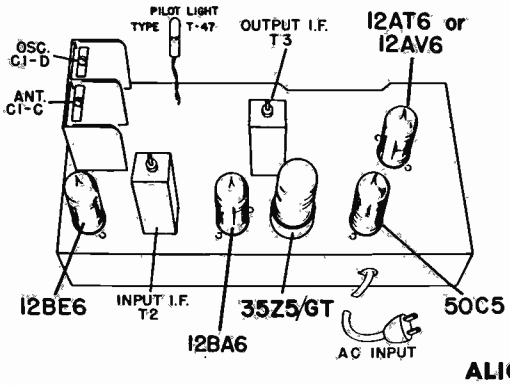

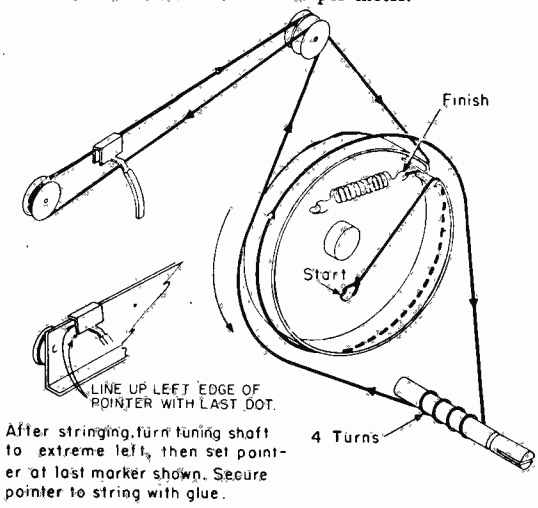

After stringing, turn tuning shaft to extreme left, then set pointer at last marker shown. Secure pointer to string with glue.

ALIGNMENT PROCEDURE

SIGNAL GENERATOR				TUNER SETTING	ADJUST FOR MAXIMUM OUTPUT	INPUT FOR 50 MILLIWATT OUTPUT
Frequency	*Coupling Capacitor*	*Connection to Radio*	*Ground Connection*			
455 kc.	.1 mf.	12BE6, Pin 7	HEAVY BUSS LEAD ACROSS CENTER OF CHASSIS	Capacitor full open (plates out of mesh)	Top and bottom Cores in output and input I.F. cans	65 microvolts
1620 kc.	.1 mf.	12BE6, Pin 7		Capacitor full open (plates out of mesh)	Oscillator trimmer C1-D on gang	70 microvolts
535 kc.	.1 mf.	12BE6, Pin 7		Capacitor fully closed	Check for adequate range	70 microvolts
1400 kc.	———	Lay Generator lead near back of cabinet		Tune in 1400 kc. signal	Antenna trimmer C1-C on gang	200 to 400 microvolts
400 cycles	.1 mf.	12AT6, Pin 1		———	———	.06 volts

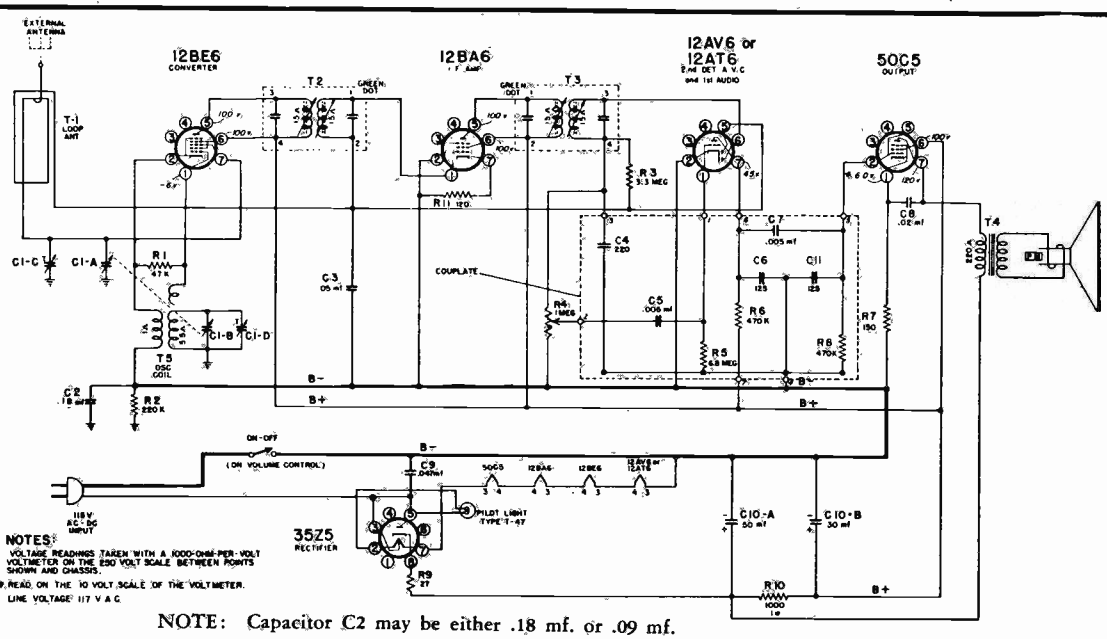

NOTE: Capacitor C2 may be either .18 mf. or .09 mf.

GENERAL ELECTRIC

MODEL 409

A.M.—F.M. RADIO

See next page, over, for alignment information.

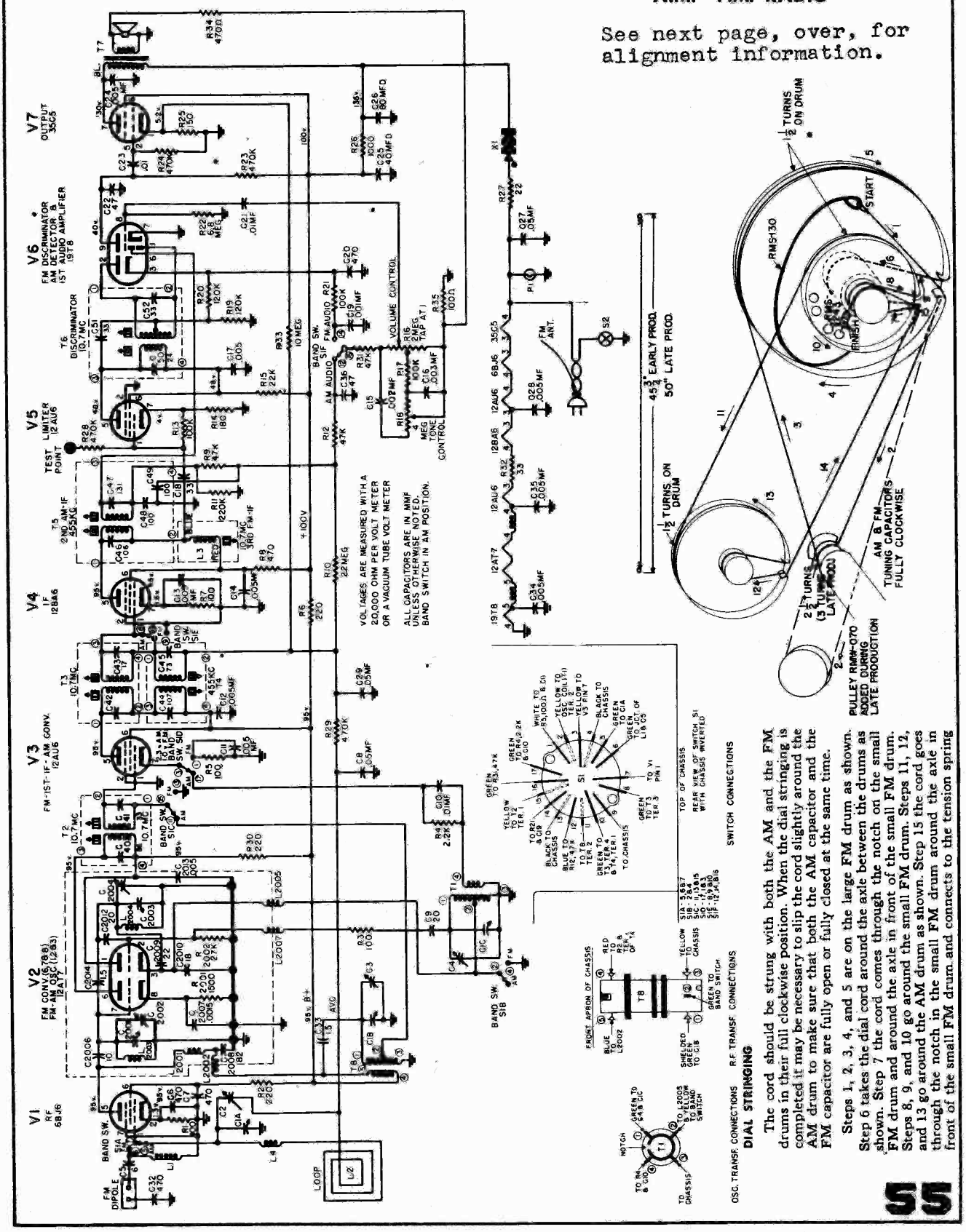

DIAL STRINGING

The cord should be strung with both the AM and the FM drums in their full clockwise position. When the dial stringing is completed it may be necessary to slip the cord slightly around the AM drum to make sure that both the AM capacitor and the FM capacitor are fully open or fully closed at the same time.

Steps 1, 2, 3, 4, and 5 are on the large FM drum as shown. Step 6 takes the dial cord around the axle between the drums as shown. Step 7 the cord comes through the notch on the small FM drum and around the axle in front of the small FM drum. Steps 8, 9, and 10 go around the small FM drum. Steps 11, 12, and 13 go around the AM drum as shown. Step 15 the cord goes through the notch in the small FM drum around the axle in front of the small FM drum and connects to the tension spring

GENERAL ELECTRIC

Model 409, continued.

A.M. METER ALIGNMENT NOTES

1. Connect an output meter across the speaker leads to indicate maximum output during A.M. alignment.
2. Turn the volume control to maximum clockwise position and reduce signal input so that output meter does not indicate more than ½ watt output during A.M. alignment.
3. For alignment of the antenna trimmer C2 it is necessary to inductively couple the signal generator output to the loop antenna by connecting a four turn, six inch diameter loop of wire across the generator output terminals and locating the loop about one foot from the radio loop. The position of loop should not be changed during alignment to prevent possible errors in peak readings.
4. Set the band switch in A.M. position.

F.M. METER ALIGNMENT NOTES

5. Connect a vacuum tube voltmeter between the test point on the rear of the chassis and chassis to read the d-c voltage developed at the limiter grid during F.M.-I.F. and R.F. alignment. Dress the V.T.V.M. leads away from the r-f end of the chassis to prevent regeneration. Reduce the signal input so that the V.T.V.M. reads approximately 1 volt d-c.
6. Connect a vacuum tube voltmeter across the volume control to read the discriminator output.
7. To align the primary of T6 (discriminator) detune the signal generator slightly either side of 10.7 mc until maximum d-c volts is read across the volume control then adjust the primary of T6 for max.
8. For F.M.-R.F. alignment the output impedance of the signal generator should be 300 ohms to properly match the input impedance of this receiver.
9. The cover on the F.M. tuner must be in place during F.M.-R.F. alignment.
10. Set the band switch to the F.M. position.

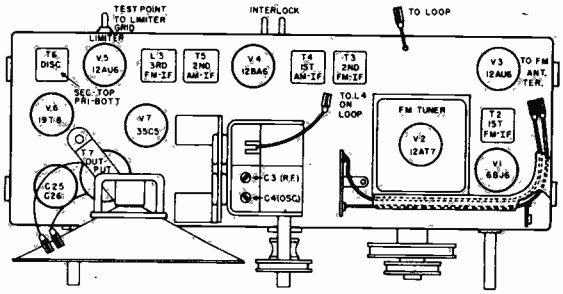

TOP VIEW

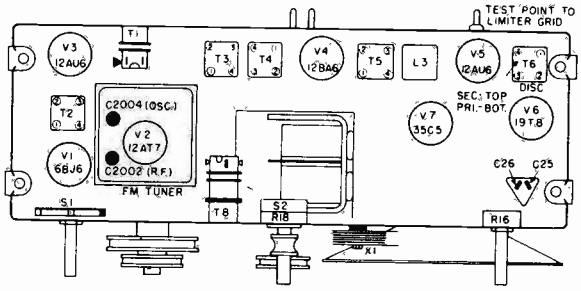

BOTTOM VIEW

METER ALIGNMENT CHART

STEP NO.	SIGNAL GENERATOR FREQUENCY	SIGNAL INPUT POINT BETWEEN	TUNING CAPACITOR SETTING	ADJUST	SEE NOTE NO.
		A.M.—I.F. ALIGNMENT			
1	455 kc, 30% mod. with 400 cycles	Pin 1 of V4 (12BA6) thru .02 mf. and chassis	Fully closed	Primary and secondary cores of T5 for maximum output meter reading	1, 2, 4
2		Pin 1 of V3 (12AU6) thru .02 mf. and chassis		Primary and secondary cores of T4 for maximum output meter reading	
		A.M.—R.F. ALIGNMENT			
3	1620 kc, 30% mod. with 400 cycles	Pin 1 of V1 (6BJ6)	Fully open (min. cap.)	(C4) oscillator trimmer for maximum output meter reading	1, 2, 4
4	1500 kc, 30% mod. with 400 cycles		For maximum output meter reading	R-f trimmer (C-3) for maximum output meter reading while rocking gang condenser	
5		Inductively coupled to the loop. See note 3		Adjust antenna trimmer (C2) on loop for maximum	1, 2, 3, 4
		F.M.—I.F. ALIGNMENT			
6	10.7 mc unmodulated	Pin 1 of V4 (12BA6) thru 100 mmf. and chassis	Fully closed	Core of L3 for maximum d-c reading at test point on rear of chassis	5, 10
7		Pin 1 of V3 (12AU6) thru 100 mmf. and chassis		Cores of T3 for maximum d-c volts at test point on rear of chassis	
8		Stator of C2001 thru .02 mf. thru hole in bottom of F.M. tuner cover		Cores of T2 for maximum d-c volts at test point on rear of chassis	
		F.M. DISCRIMINATOR (T6) ALIGNMENT			
9	10.7 mc unmodulated	Pin 1 of V4 (12BA6) thru 100 mmf. and chassis	Fully closed	T6 secondary core for zero output across volume control (R16)	6, 10
10	Detune for maximum d-c at R16. See note 7			T6 primary core for maximum d-c volts across the volume control (R16)	6, 7, 10
		F.M.—R.F. ALIGNMENT			
11	108.5 mc	At F.M. antenna terminals with built-in F.M. antenna disconnected	Fully open (min. cap.)	F.M. oscillator trimmer C2004 for maximum d-c volts at test point on rear of chassis	5, 8, 9, 10
12				F.M.-R.F. trimmer C2002 for maximum d-c volts at test point on rear of chassis while rocking signal generator frequency	

MANUAL OF 1952 MOST-OFTEN-NEEDED RADIO DIAGRAMS

GENERAL ELECTRIC

SERVICE DATA
FOR
MODELS 422 and 423

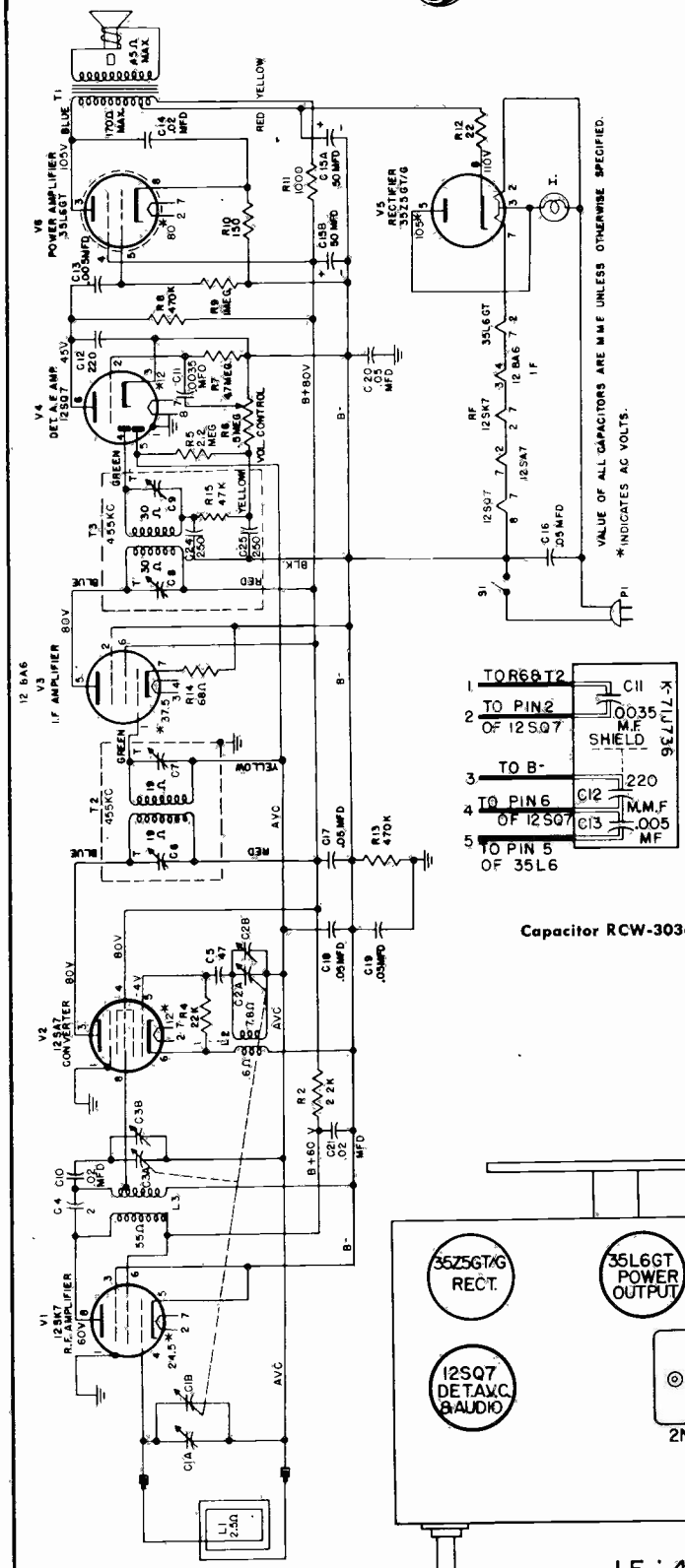

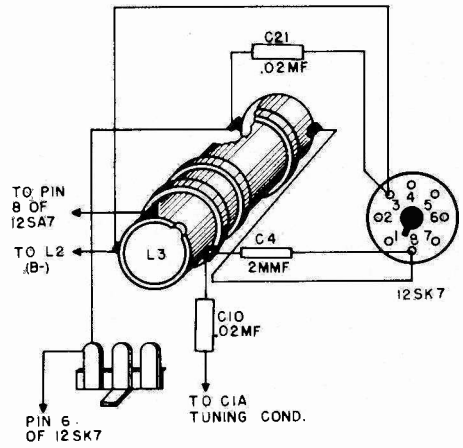

Wiring Diagram for R.F. Coil

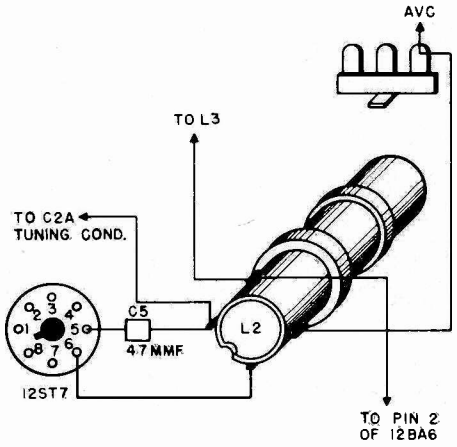

Wiring Diagram for Oscillator Coil

Capacitor RCW-3036

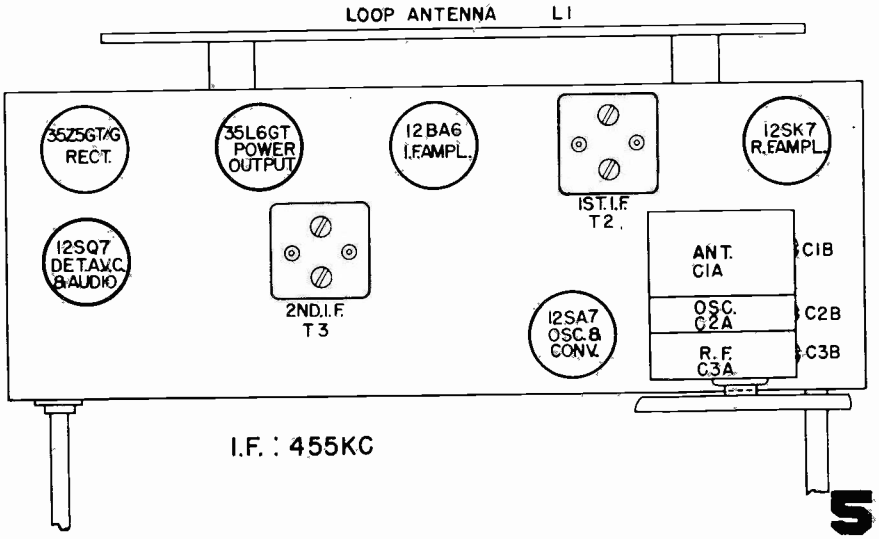

I.F. : 455KC

MANUAL OF 1952 MOST-OFTEN-NEEDED RADIO DIAGRAMS

GENERAL ELECTRIC

RADIO MODELS 414, 415, 416 AND 430

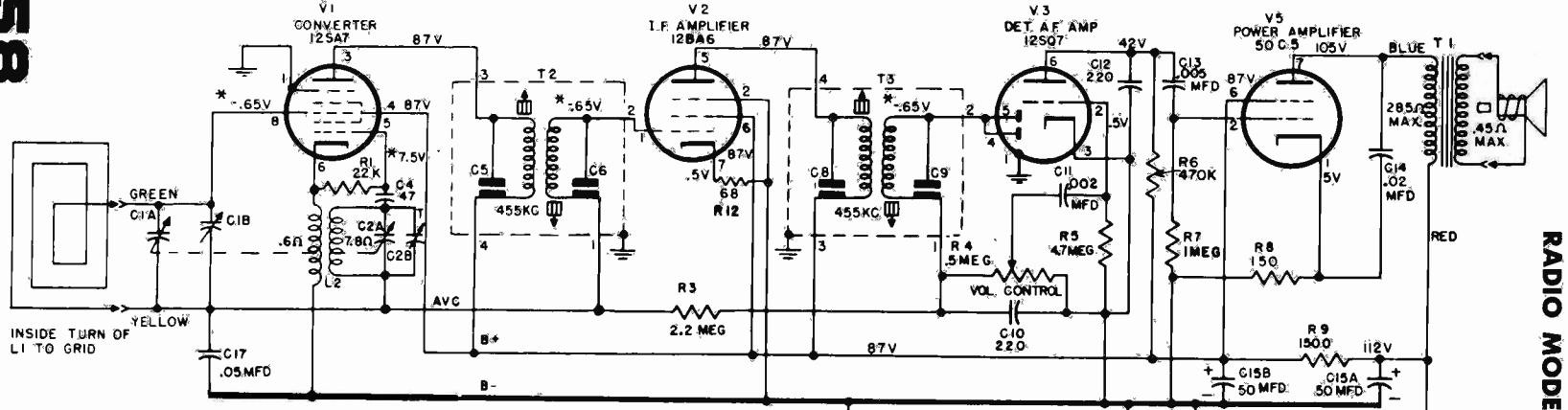

1. VOLTAGES ARE MEASURED TO B- BUS.
2. ALL VOLTAGES ARE DC EXCEPT FOR HEATERS WHEN USING AC INPUT.
3. * INDICATES VACUUM TUBE VOLTMETER READING WITH TUNING DIAL AT 1000 KC (IN CLEAR CHANNEL, NO SIGNAL). THESE VOLTAGES NORMALLY VARY WITH SIGNAL.
4. ALL OTHER DC VOLTAGES MEASURED WITH 20,000 OHMS PER VOLTMETER.

VALUE OF ALL CAPACITORS ARE M.M.F UNLESS OTHERWISE SPECIFIED. C5,6,8 & 9 ARE PART OF MOLDED TRANSFORMER BASE, 110MMF IN ASSEMBLIES MARKED M77J602-3, 83MMF IN TRANSFORMERS M77J602-1 OR -2 & M77J460-2 OR -3.

ALIGNMENT CHART

Step	Connect Test Oscillator to	Test Osc. Setting	Radio Dial Setting	Adjust for Maximum
I-F ALIGNMENT				
1	V2, 12BA6 grid (Pin 1), in series with .05 mfd.	455 kc	.....	Cores of second i-f transformer, T3
2	V1, 12SA7 grid (Pin 8), in series with .05 mfd.	455 kc	.....	Cores of first i-f transformer, T2
3	V1, 12SA7 grid (Pin 8), in series with .05 mfd.	455 kc	.....	Recheck adjustment of T2 and T3, for maximum
R-F ALIGNMENT				
4	Inductively coupled to radio loop	1620 kc	Minimum capacity C2A, C2B	C3, oscillator trimmer
5	Inductively coupled to radio loop	1500 kc	For Maximum	C1, r-f trimmer
6	Set pointer to 150. See Note			

Relocate dial pointer on tuning shaft at 1500 KC on the dial to correspond to the tuning capacitor setting in Step 5.

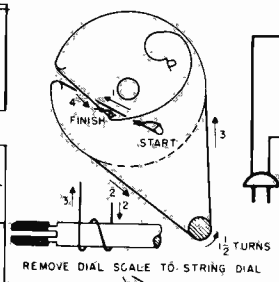

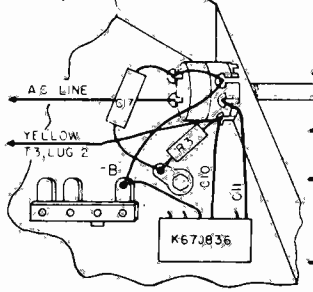

Volume Control

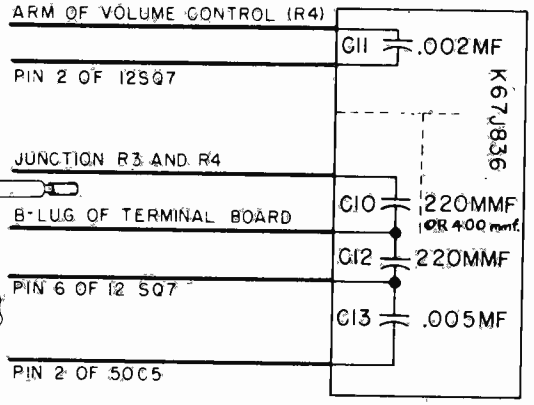

Capacitor Unit C10, 11, 12 and C13

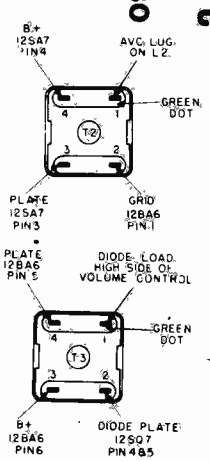

MANUAL OF 1952 MOST-OFTEN-NEEDED RADIO DIAGRAMS

GENERAL ELECTRIC

FOR MODELS 607 AND 608

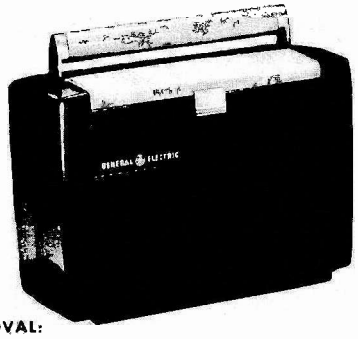

ALIGNMENT CHART

Always have volume control full on and reduce signal input so A-V-C will not affect output.

Step	Sig. Gen. Connected to B — and	Sig. Gen. Frequency	Dial Setting	Adjust For Max. Output
1	1T4 Grid Pin 6 thru .05 Cap	455 kc	550kc	Cores of I-F Trans. T3
2	IR5 Grid Pin 6 thru .05 Cap	455 kc	550 kc	Cores of I-F Trans. T2
3	IR5 Grid Pin 6 thru .05 Cap	455 kc	550 kc	Re-adjust T2 and T3
4	Inductively Coupled to Loop	1620 kc	1620 kc	Osc. trimmer C2B
5	Inductively Coupled to Loop	1500 kc	Tune for maximum	R-F trimmer C1B

Make the final ANT. trimmer adjustment with the chassis installed in the cabinet and an "A" battery in position and connected, since the battery affects the tuning of the antenna.

CHASSIS REMOVAL:

A. Remove two control knobs
B. Remove two hex head screws from cabinet bosses just under each side of dial scale
C. Remove two speed nuts (turn 90°) from cabinet bosses at each side of speaker

BOTTOM SHIELD REMOVAL:

A. Remove chassis
B. Unsolder one loop lead from stator of R-F section of gang condenser
C. Remove six trimount studs:
   3 across back of chassis
   3 across front of chassis (2 under speaker grille)
D. Slide bottom down one inch and pull out

CAUTION: One side of the power line is connected to B—. Avoid any direct connections to ground. Use an isolating transformer when making service adjustments with the chassis removed from the cabinet.

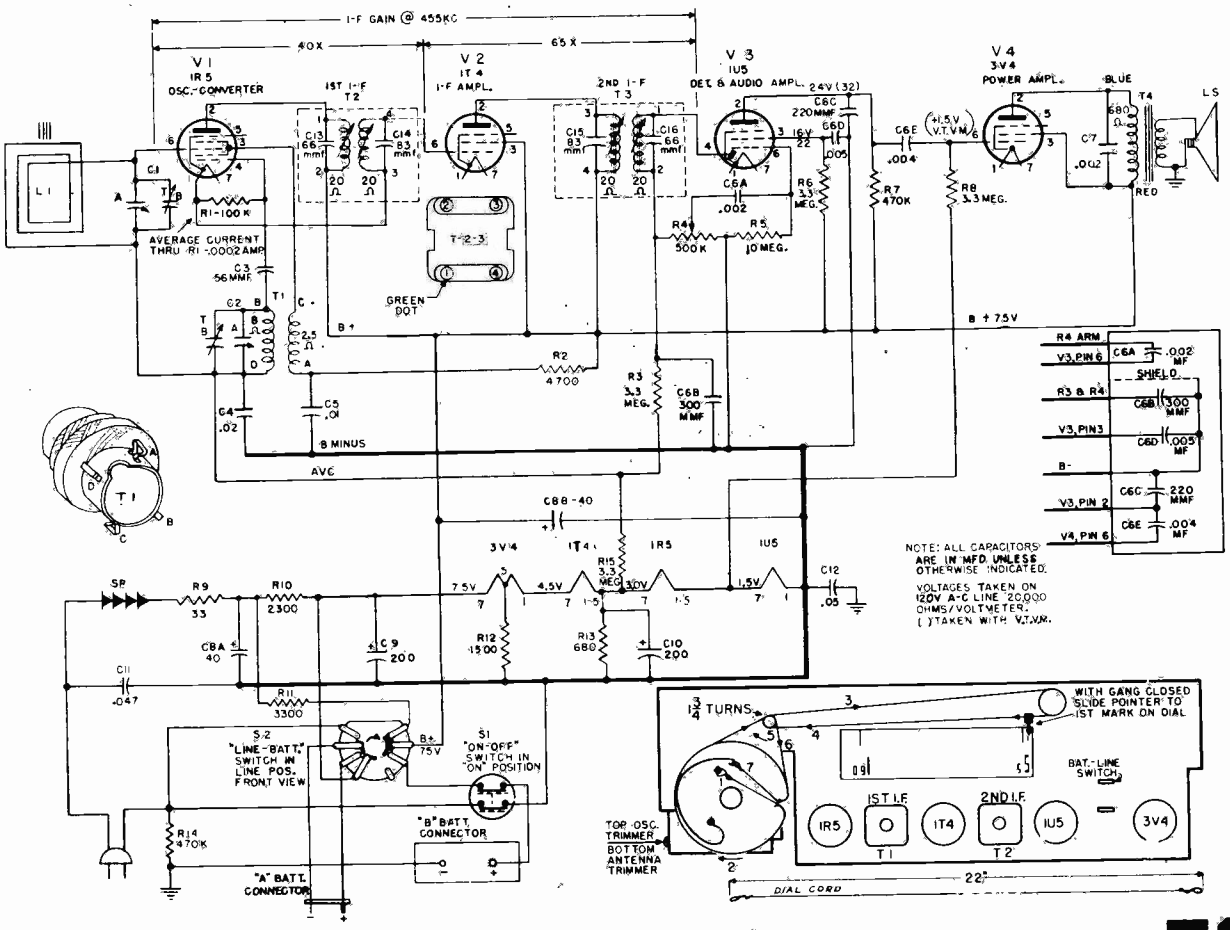

MANUAL OF 1952 MOST-OFTEN-NEEDED RADIO DIAGRAMS

GENERAL ELECTRIC

MODELS 754 & 756

AM-FM RADIO-PHONOGRAPH

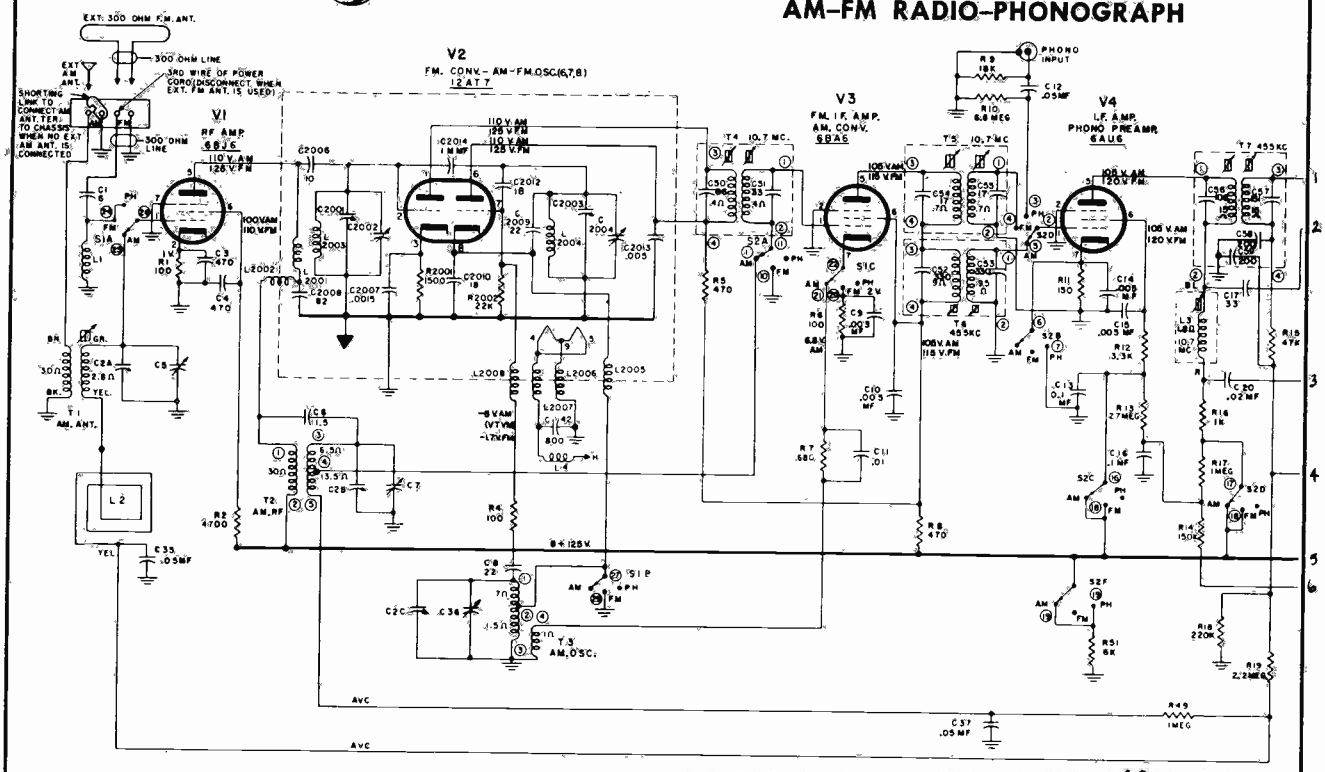

CONTINUED →

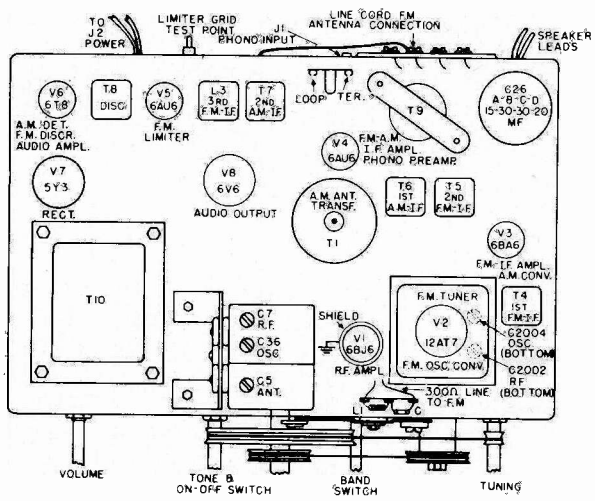

TOP VIEW

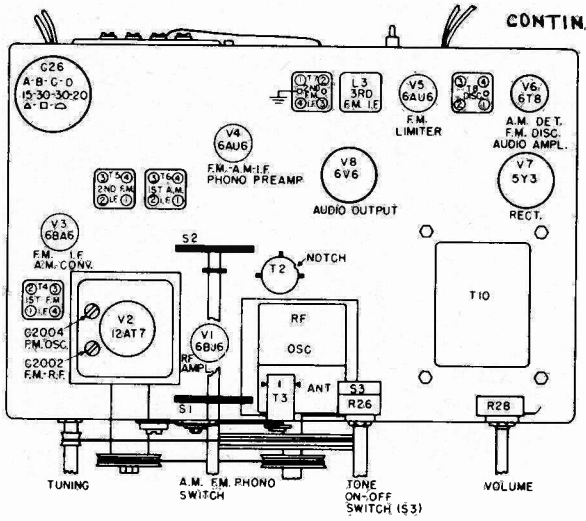

BOTTOM VIEW

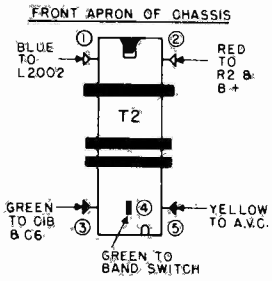

R.F. TRANSF. CONNECTIONS

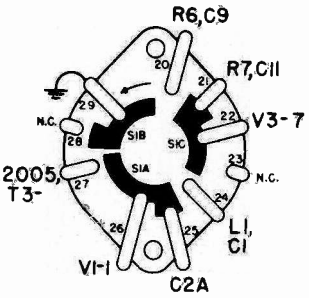

AM POSITION

FRONT WAFER REAR VIEW

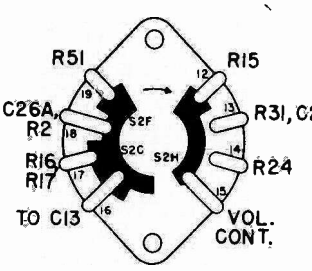

AM POSITION

REAR WAFER FRONT VIEW

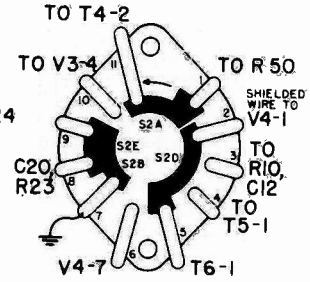

AM POSITION

REAR WAFER REAR VIEW

MANUAL OF 1952 MOST-OFTEN-NEEDED RADIO DIAGRAMS

GENERAL ELECTRIC

MODELS 754 & 756

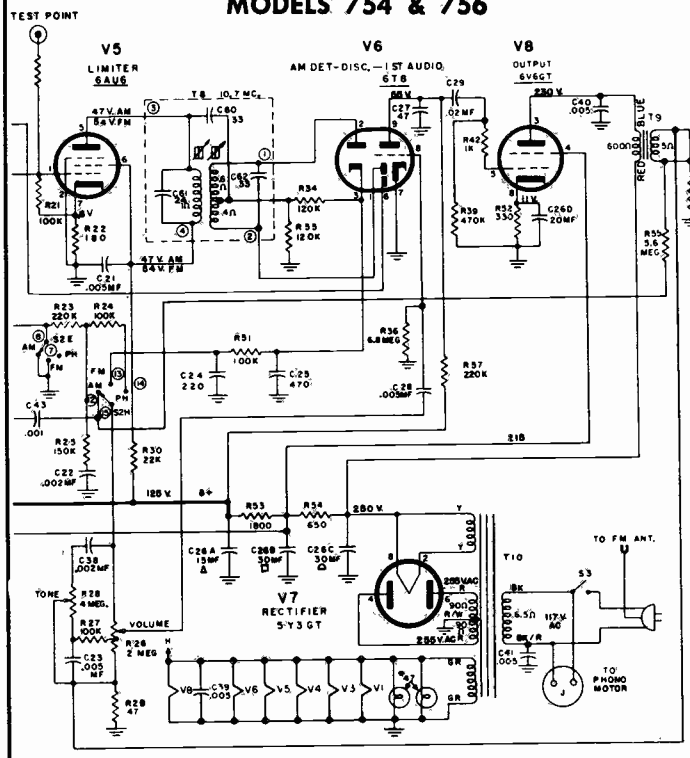

METER ALIGNMENT NOTES

1. Connect an output meter across the speaker leads to indicate maximum output.
2. Turn volume control to maximum clockwise position and reduce signal input so that output meter does not indicate more than ½ watt output.
3. Band switch set in AM position.
4. Connect an 18 microhenry choke across the loop terminals to assimilate the loop during alignment.
5. Connect a vacuum tube voltmeter from the limiter grid test point to chassis to read the d-c voltage developed at the limiter grid during FM-IF and RF alignment. Dress the leads to the vacuum tube voltmeter leads away from the r-f end of the chassis to prevent regeneration. Reduce signal input so that V.T.V.M. reads approximately 1 volt d-c at limiter grid test point.
6. Connect a vacuum tube voltmeter across the volume control and align the secondary of T8 for zero output at 10.7 mc.
7. Detune the signal generator either side of 10.7 mc until maximum d-c volts across the volume control is read—then peak the primary core of T8.
8. For FM-RF alignment the output impedance of the signal generator cable should be 300 ohms to properly match the input impedance of this receiver.
9. The cover over the FM-RF tuner must be in place during FM-RF alignment.
10. Band switch in FM position.
11. Make the chassis connection as close to the signal input point as possible.

OSC. TRANSF. CONNECTIONS

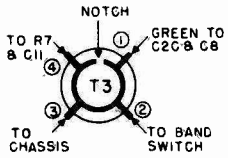

EQUIPMENT REQUIRED

1. Signal generator
2. Vacuum tube voltmeter
3. Output meter
4. One 18 microhenry choke
5. .02 mf capacitor
6. 100 mmf capacitor

NOTE: ALL RESISTANCES IN OHMS UNLESS OTHERWISE DESIGNATED
ALL CAPACITANCES GIVEN IN MICRO-MICROFARADS UNLESS OTHERWISE DESIGNATED
VOLTAGES ARE PLUS OR MINUS 20% TOLERANCE
VOLTAGES MEASURED WITH A V.T.V.M. OR 20,000 OHM PER VOLT METER

CONTINUED

METER ALIGNMENT CHART

Step No.	Signal Generator Frequency	Signal Input Point Between	Tuning Gang Capacitor	Adjust	See Note No.
AM-IF ALIGNMENT					
1	455 KC 30% mod. with 400 cycles	Pin 1 of V4 (6AU6) thru .02 mf. and chassis	Closed	Primary and secondary cores of T7 for max. output meter reading	1, 2, 3
2		Pin 1 of V3 (6BA6) thru .02 mf. and chassis		Primary and secondary cores of T6 for max. output meter reading. Recheck adjustment of T7 cores	
AM-RF ALIGNMENT					
3	1620 KC 30% mod. with 400 cycles	Pin 1 of V1 (6BJ6) thru .02 mf. and chassis	AM gang cap. fully open. (Min. cap.)	Adjust oscillator trimmer (C36) for maximum output meter reading.	1, 2, 3
4	1500 KC 30% mod. with 400 cycles		Tuning gang for max. output meter reading.	Adjust r-f trimmer (C7) for maximum output meter reading while rocking gang condenser.	
5	580 KC 30% mod. with 400 cycles	AM antenna terminals thru I. R. E. dummy antenna		Core of T1 for maximum	1, 2, 3, 4
6	1500 KC 30% mod. with 400 cycles			Adjust antenna trimmer C5 for maximum	
FM-IF ALIGNMENT CHART					
7	10.7 mc unmodulated	Pin 1 of V4 (6AU6) thru 100 mmf. and chassis	Closed	Core of L3 for max. d-c voltage at test point on rear of chassis	5, 10, 11
8		Pin 1 of V3 (6BA6) thru 100 mmf. and chassis		Cores of T5 for max. d-c volts at limiter test point	
9		Stator of C2001 thru 100 mmf. thru hole in bottom of tuner cover		Cores of T4 for max. d-c volts at limiter test point	
FM DISCRIMINATOR ALIGNMENT					
10	10.7 mc unmodulated	Pin 1 of V4 thru 100 mmf. and chassis	Closed	T8 secondary core for zero output across the volume control R28 at 10.7 mc	6, 10, 11
11	Detune for max. d.c. at R28. See Note 7.			T8 primary core for max. d-c volts across the volume control R28	6, 7, 10, 11
FM-RF ALIGNMENT					
12	108.5 mc	At FM antenna terminals	Tuning capacitor fully open	Oscillator trimmer C2004 for maximum d-c voltage at limiter grid test point.	5, 8, 9, 10, 11
13	108 mc		Tune for maximum	FM-RF trimmer C2002 for max. output at limiter grid test point while rocking signal generator	
14	Recheck oscillator alignment as in Step 12.				

GENERAL ELECTRIC

MODEL 741

RADIO–PHONOGRAPH

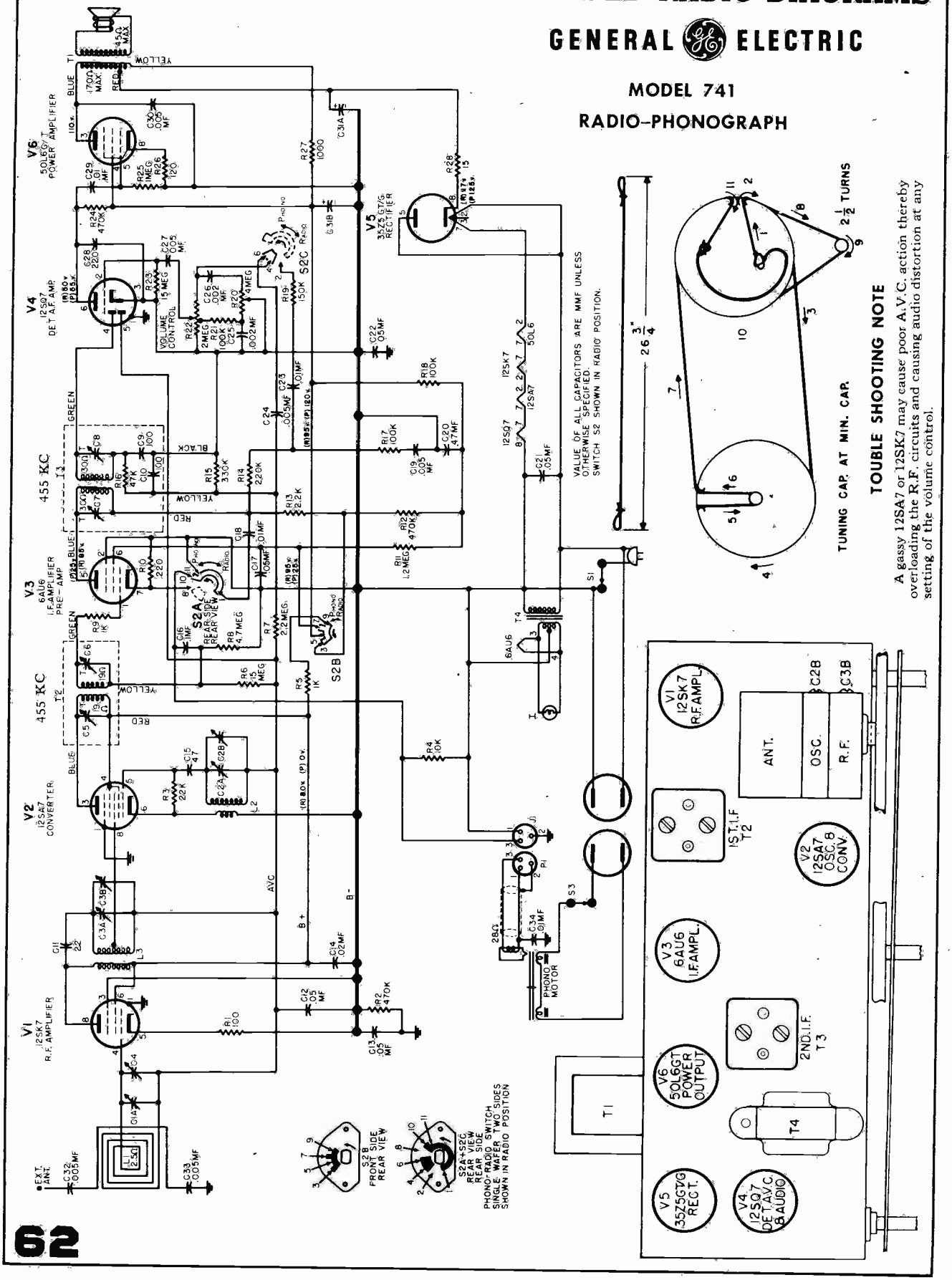

TOUBLE SHOOTING NOTE

A gassy 12SA7 or 12SK7 may cause poor A.V.C. action thereby overloading the R.F. circuits and causing audio distortion at any setting of the volume control.

the hallicrafters co.

MODELS 5R30A, 5R31A, 5R32A, 5R33A and 5R34A

RUN 2

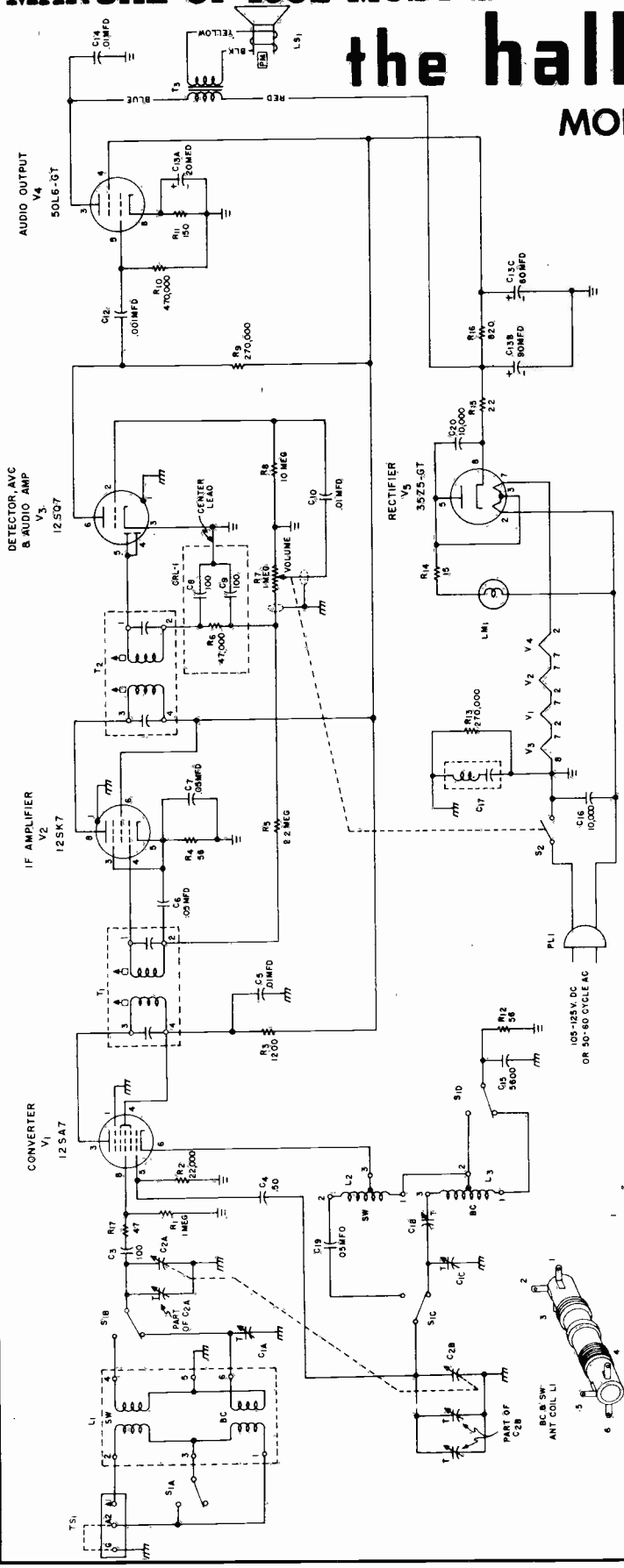

NOTES

1. RESISTANCE INDICATED IN OHMS AND CAPACITANCE IN MMF UNLESS OTHERWISE SPECIFIED
2. RESISTORS HAVE 1/2 WATT RATING UNLESS OTHERWISE SPECIFIED
3. INTERMEDIATE FREQUENCY - 455 KC
4. SW-BC SWITCH SHOWN IN BC POSITION (CLOCKWISE)
5. CHASSIS
6. B- (COMMON GROUND)

LAST RESISTOR SYMBOL - R17
LAST CAPACITOR SYMBOL C20

Intermediate Frequency . . . . . 455 KC

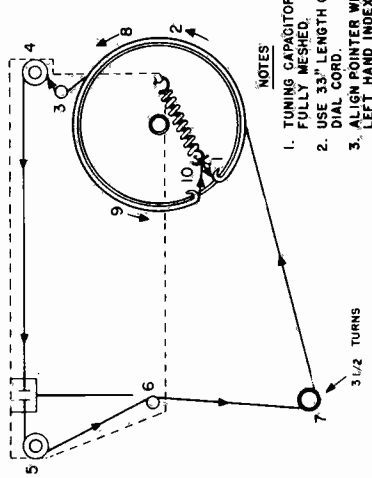

NOTES

1. TUNING CAPACITOR FULLY MESHED.
2. USE 33" LENGTH OF DIAL CORD.
3. ALIGN POINTER WITH LEFT HAND INDEX MARKS ON DIAL.

Dial Cord Stringing Diagram

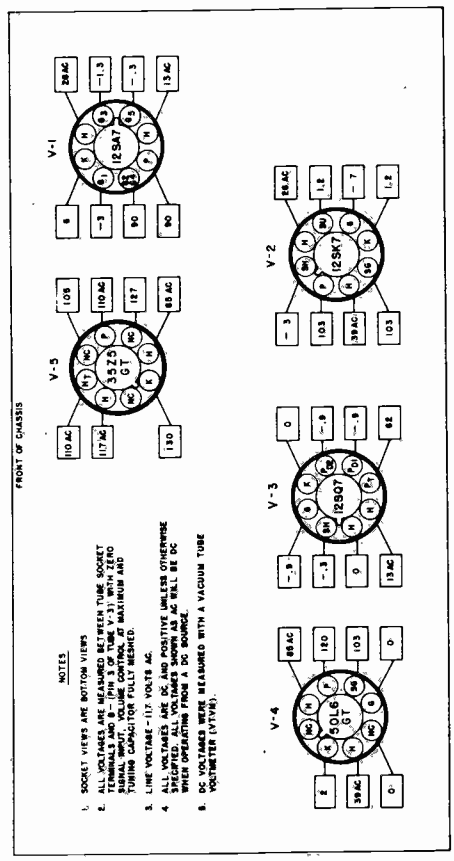

NOTES

1. SOCKET VIEWS ARE BOTTOM VIEWS
2. ALL VOLTAGES ARE MEASURED BETWEEN TUBE SOCKET TERMINALS AND B- (PIN 3 OF TUBE V-3) WITH ZERO SIGNAL INPUT, VOLUME CONTROL AT MAXIMUM AND TUNING CAPACITOR FULLY MESHED.
3. LINE VOLTAGE - 117 VOLTS AC.
4. ALL VOLTAGES ARE DC AND POSITIVE UNLESS OTHERWISE SPECIFIED. ALL VOLTAGES SHOWN AC WILL BE DC WHEN SWITCHED TO DC POWER.
5. DC VOLTAGES WERE MEASURED WITH A VACUUM TUBE VOLTMETER (VTVM).

the hallicrafters co.

MODELS 5R50, 5R51, & 5R52

RUN 1

See next page, adjacent, for balance of circuit and alignment information.

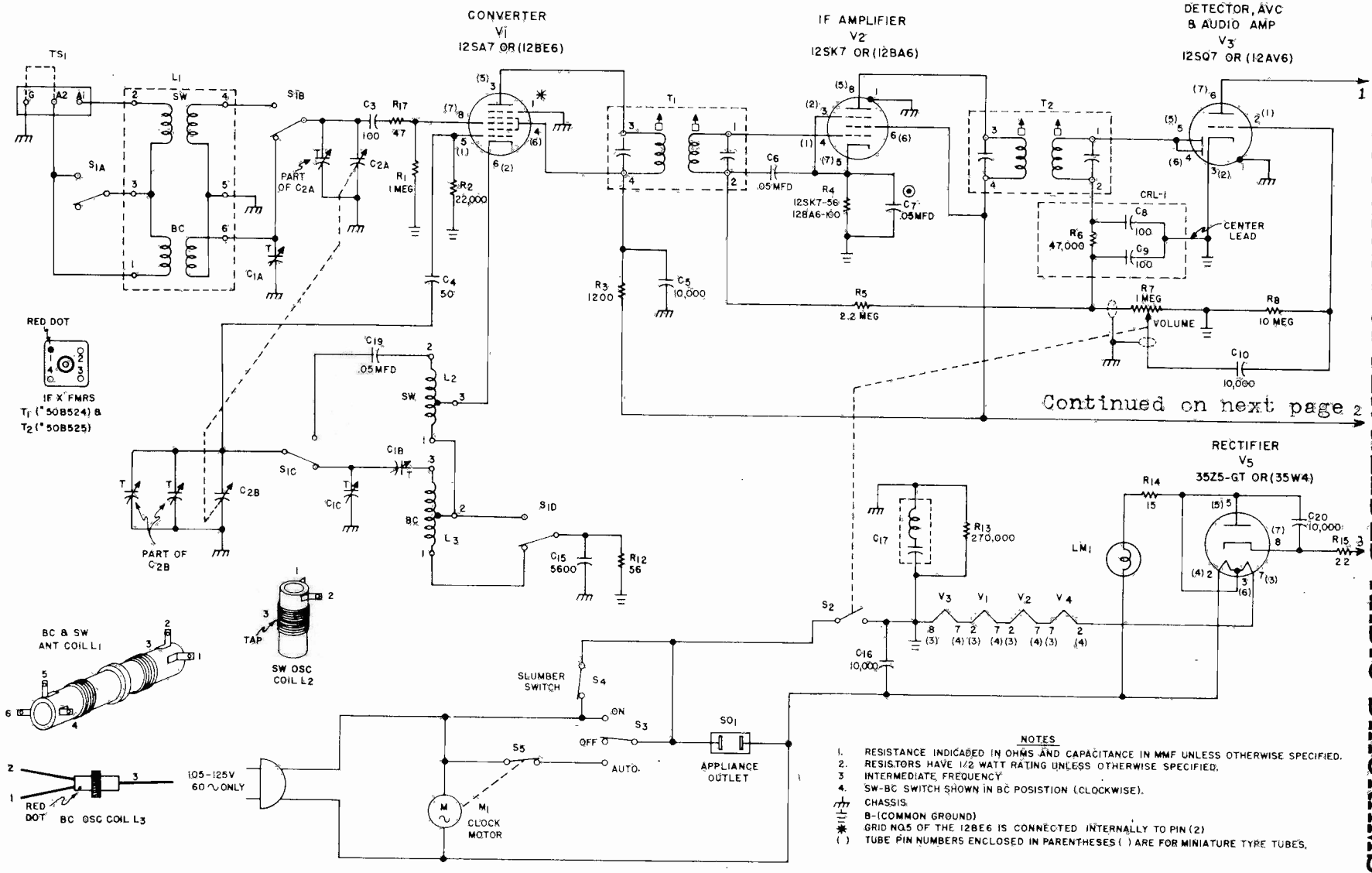

NOTES

1. RESISTANCE INDICATED IN OHMS AND CAPACITANCE IN MMF UNLESS OTHERWISE SPECIFIED.
2. RESISTORS HAVE 1/2 WATT RATING UNLESS OTHERWISE SPECIFIED.
3. INTERMEDIATE FREQUENCY
4. SW-BC SWITCH SHOWN IN BC POSISTION (CLOCKWISE).

⏚ CHASSIS.
⏚ B-(COMMON GROUND)
✱ GRID NO.5 OF THE 12BE6 IS CONNECTED INTERNALLY TO PIN (2)
( ) TUBE PIN NUMBERS ENCLOSED IN PARENTHESES ( ) ARE FOR MINIATURE TYPE TUBES.

hallicrafters

5R50
5R51 & 5R52

Continued from proceding page, adjacent at left.

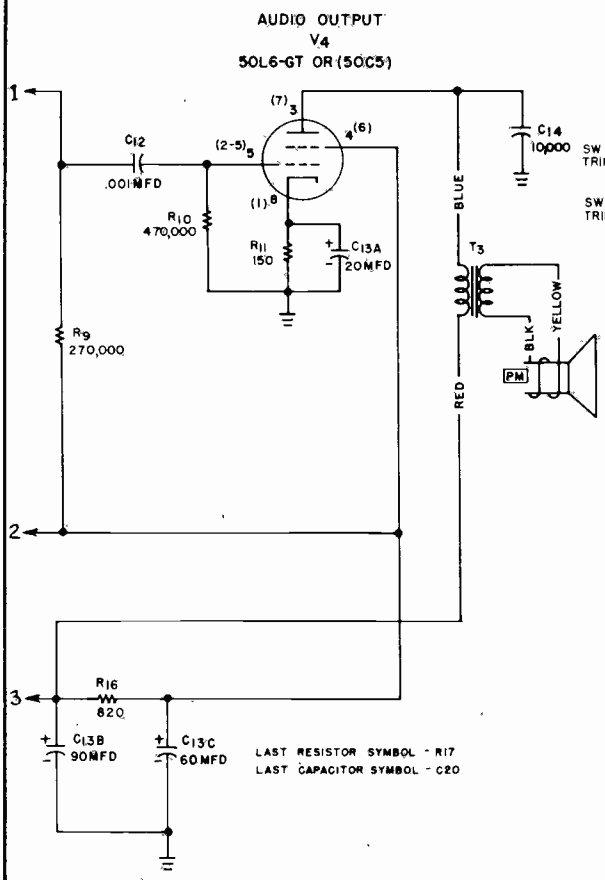

Main circuit at left.

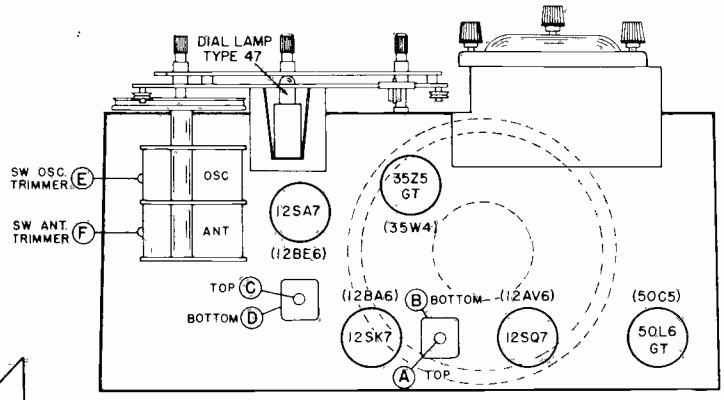

Fig. 5. Top View of Chassis Showing Location of Tubes and Alignment Adjustments

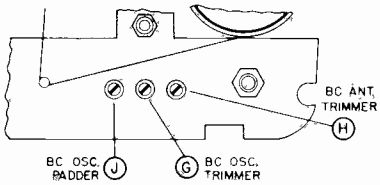

Fig. 6. Front View of Chassis Showing Location of Alignment Adjustments

Intermediate Frequency . . . . . 455 KC
Antenna . . . . . .Single wire or doublet
Power Supply . . . . . 105-125 volts
60 cycles AC only
Frequency Coverage. . . . .540-1620 KC
and 6-18 MC

ALIGNMENT PROCEDURE

- Connect output meter across speaker voice coil.
- Set volume control at maximum.
- Use a non-metallic alignment tool.
- Signal generator must have a modulated output and cover 455 KC, 600 KC, 1300 KC and 14 MC.
- Keep the generator output as low as possible to avoid AVC action.
- Refer to Figs. 5 and 6 for location of alignment adjustments.

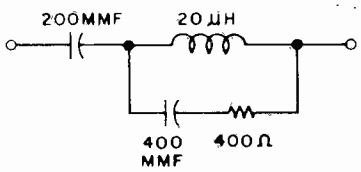

Fig. 7. RTMA Dummy Antenna

STEP	SIGNAL GENERATOR CONNECTIONS	SIGNAL GENERATOR FREQUENCY	BAND SWITCH SETTING	RECEIVER DIAL SETTING	ADJUST FOR MAXIMUM OUTPUT
1	High side to stator plates of rear section of tuning capacitor through a .01 mfd. capacitor. Low side to chassis.	455 KC	BROADCAST	1000 KC	A,B, C,D
2	High side to A1 on antenna terminal strip on rear of chassis through a standard RTMA dummy antenna (Fig.7). Low side to chassis. Connect the jumper between A2 and G.	14 MC	SHORTWAVE	14 MC	E,F
3	Same as STEP 2.	1300 KC	BROADCAST	1300 KC	G,H
4	Same as STEP 2.	600 KC	BROADCAST	600 KC	J

MANUAL OF 1952 MOST-OFTEN-NEEDED RADIO DIAGRAMS

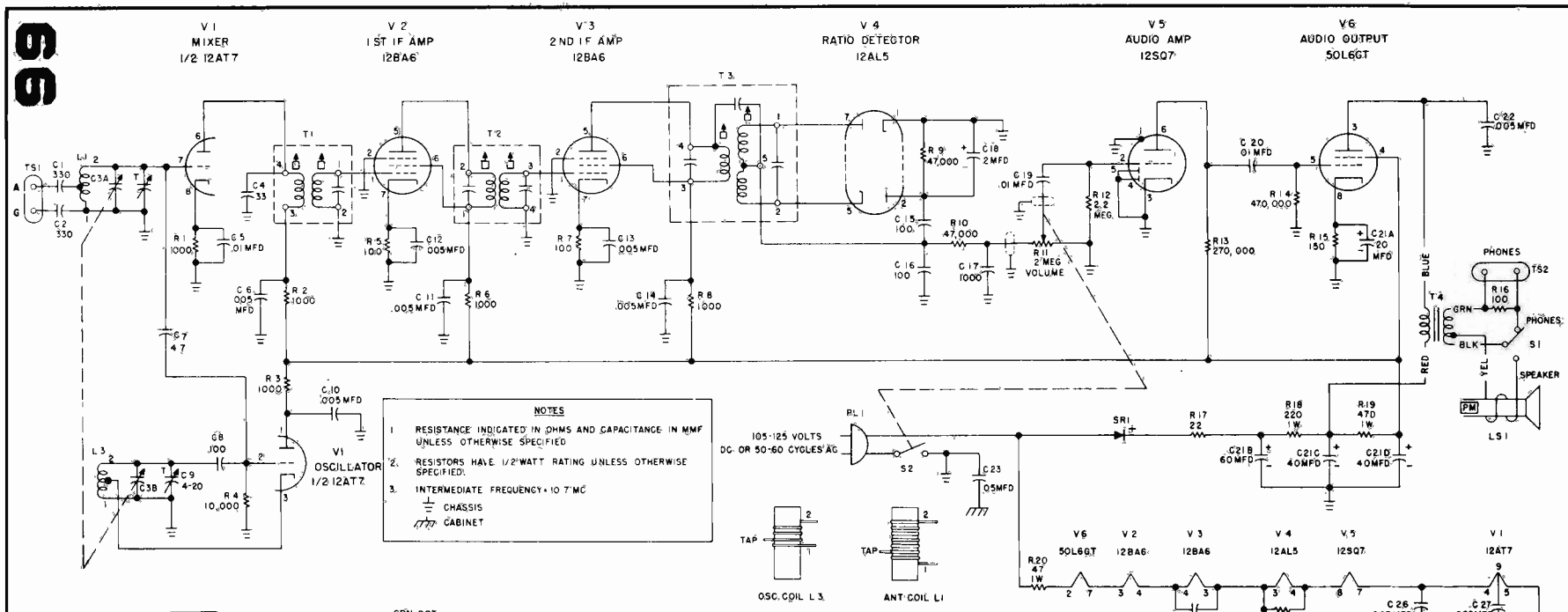

NOTES

1. RESISTANCE INDICATED IN OHMS AND CAPACITANCE IN MMF UNLESS OTHERWISE SPECIFIED
2. RESISTORS HAVE 1/2 WATT RATING UNLESS OTHERWISE SPECIFIED.
3. INTERMEDIATE FREQUENCY = 10.7 MC

⏚ CHASSIS
CABINET

Intermediate Frequency . . . . . .10.7 MC
Power Supply. . . . 105-125 volts DC or 50-60 cycle AC
Frequency Coverage . . . . . 30 to 50 MC

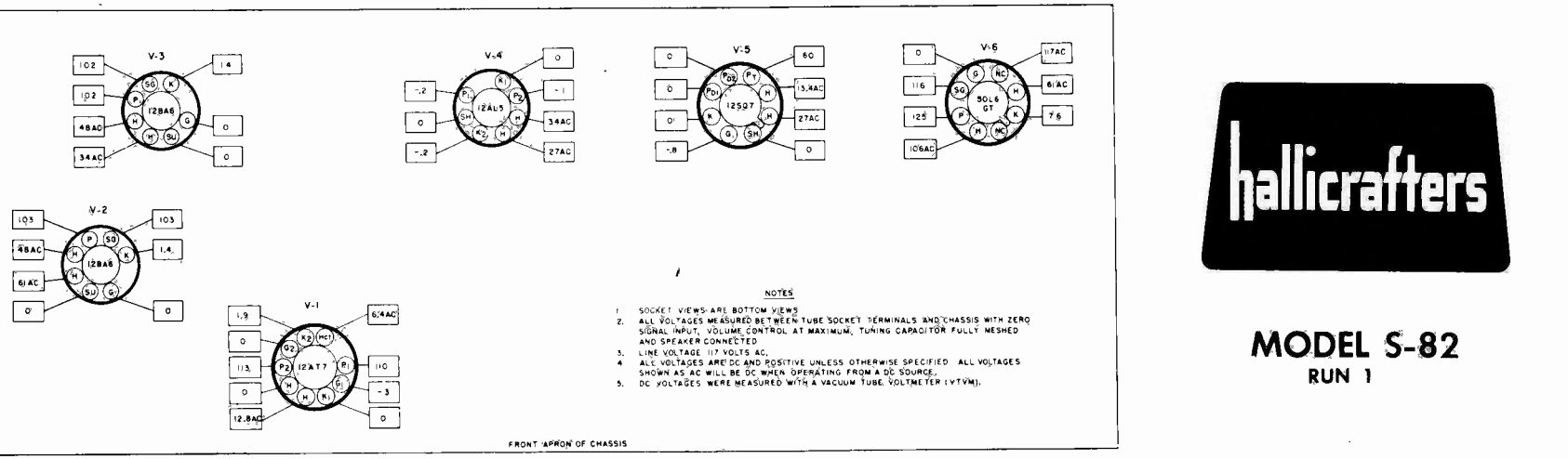

NOTES

1. SOCKET VIEWS ARE BOTTOM VIEWS
2. ALL VOLTAGES MEASURED BETWEEN TUBE SOCKET TERMINALS AND CHASSIS WITH ZERO SIGNAL INPUT, VOLUME CONTROL AT MAXIMUM, TUNING CAPACITOR FULLY MESHED AND SPEAKER CONNECTED
3. LINE VOLTAGE 117 VOLTS AC.
4. ALL VOLTAGES ARE DC AND POSITIVE UNLESS OTHERWISE SPECIFIED. ALL VOLTAGES SHOWN AS AC WILL BE DC WHEN OPERATING FROM A DC SOURCE.
5. DC VOLTAGES WERE MEASURED WITH A VACUUM TUBE VOLTMETER (VTVM).

hallicrafters

MODEL S-82
RUN 1

MONTGOMERY WARD

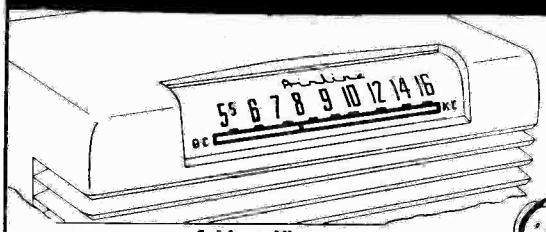

Cabinet View

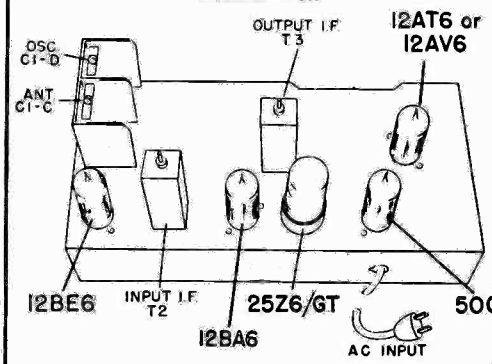

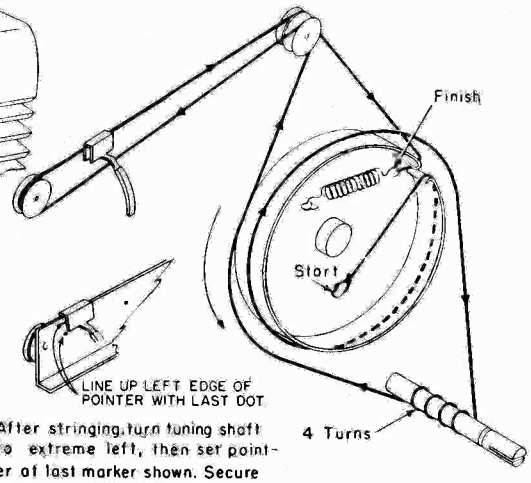

After stringing, turn tuning shaft to extreme left, then set pointer at last marker shown. Secure pointer to string with glue.

Dial Stringing Diagram

Airline RADIO

MODEL NO.

15BR-1525D
15BR-1526D
15BR-1531D
15BR-1532D

ALIGNMENT PROCEDURE

- Loop must be connected and volume set to maximum.

SIGNAL GENERATOR				TUNER SETTING	ADJUST FOR MAXIMUM OUTPUT
Frequency	Coupling Capacitor	Connection to Radio	Ground Connection		
455 kc.	.1 mf	12BE6, Pin 7	HEAVY BUSS LEAD ACROSS CENTER OF CHASSIS	Capacitor fully open (plates out of mesh)	Top and bottom Cores in output and input I.F. cans
1620 kc.	.1 mf	12BE6, Pin 7		Capacitor fully open (plates out of mesh)	Oscillator trimmer C1-D on gang
535 kc.	.1 mf.	12BE6, Pin 7		Capacitor fully closed	Check for adequate range
1400 kc.	_____	Lay generator lead near back of cabinet		Tune in 1400 kc. signal	Antenna trimmer C-1C on gang

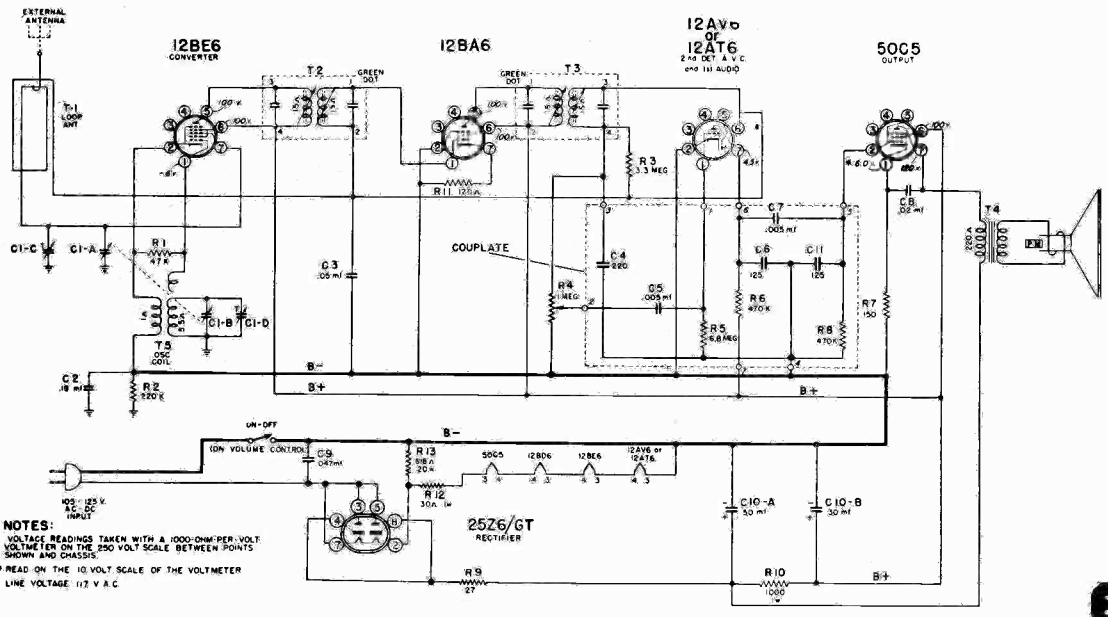

NOTES:
VOLTAGE READINGS TAKEN WITH A 1000-OHM-PER-VOLT VOLTMETER ON THE 250 VOLT SCALE BETWEEN POINTS SHOWN AND CHASSIS.
* READ ON THE 10 VOLT SCALE OF THE VOLTMETER
LINE VOLTAGE 117 V A.C.

MONTGOMERY WARD

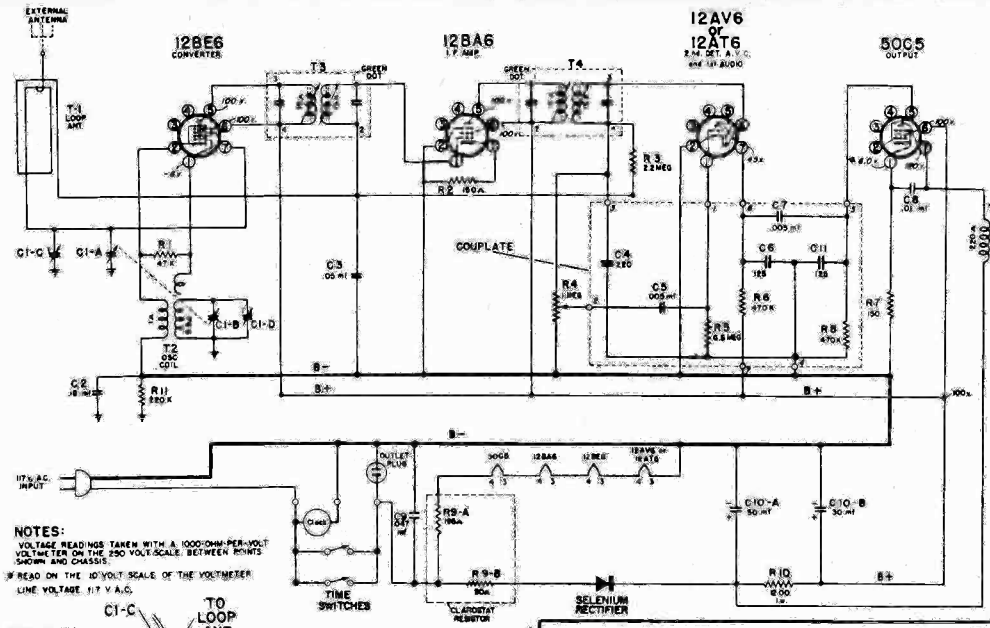

NOTES:
VOLTAGE READINGS TAKEN WITH A 1000-OHM-PER-VOLT VOLTMETER ON THE 250 VOLT SCALE BETWEEN POINTS SHOWN AND CHASSIS.
* READ ON THE 10 VOLT SCALE OF THE VOLTMETER
LINE VOLTAGE 117 V A.C.

CLOCK RADIO

MODEL NOS.

15BR-1548A
15BR-1549A
25BR-1548B
25BR-1549B

Also TRUETONE Western Auto Models D-2216A, -B, D-2217A, -B, are the same.

For alignment information see material under Model 15BR-1525 on the preceding page.

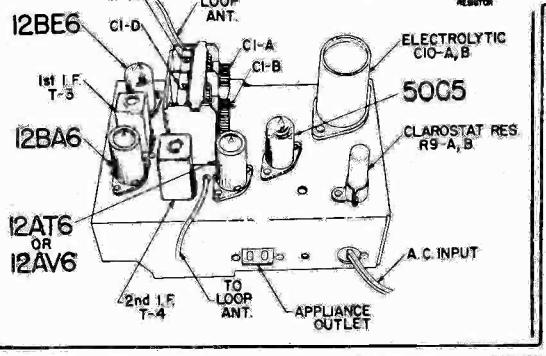

TABLE MODEL RADIO

Model Nos.

15GCB-1583
15GCB-1584

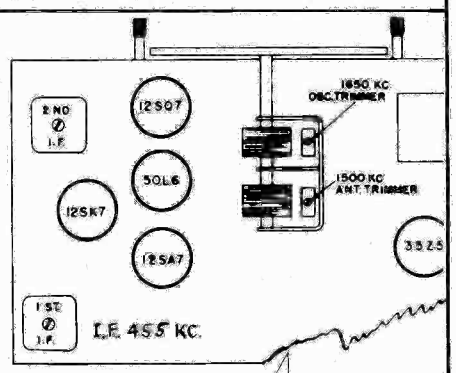

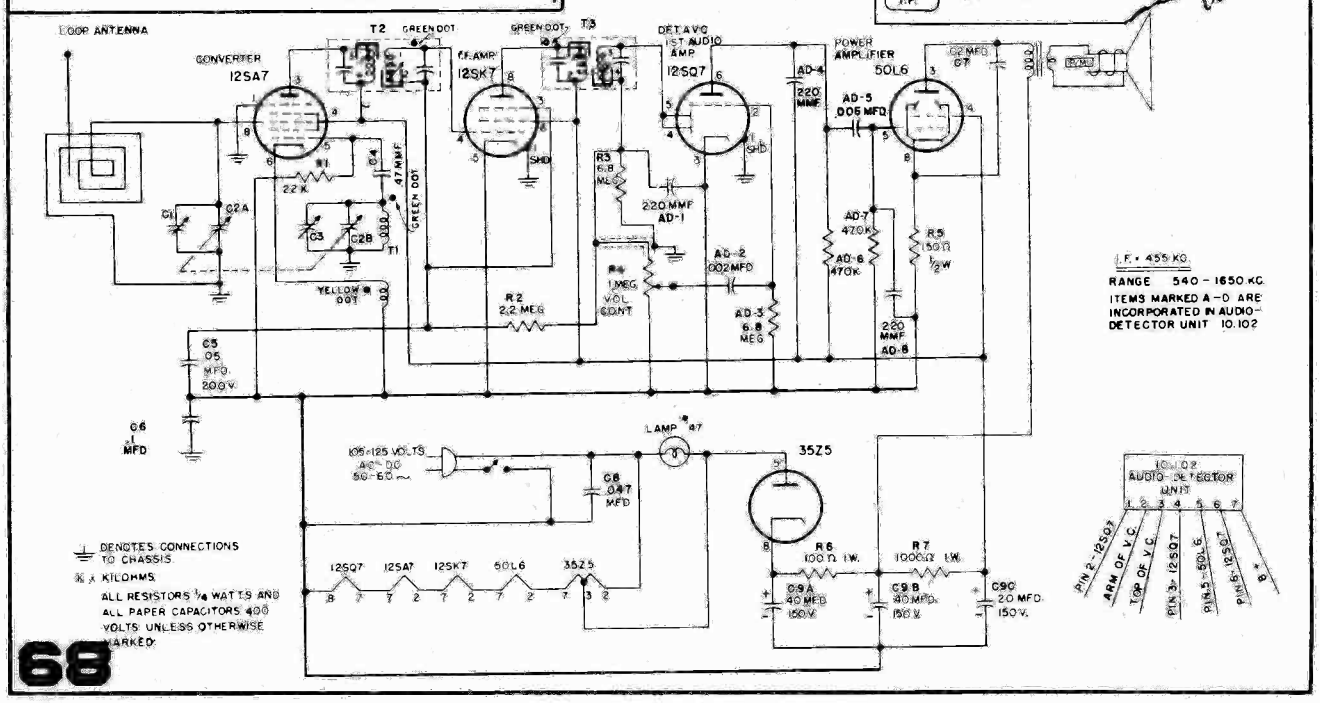

⏚ DENOTES CONNECTIONS TO CHASSIS
K = KILOHMS
ALL RESISTORS ¼ WATTS AND ALL PAPER CAPACITORS 400 VOLTS UNLESS OTHERWISE MARKED.

MANUAL OF 1952 MOST-OFTEN-NEEDED RADIO DIAGRAMS

MONTGOMERY WARD **MODEL 15-GHM-1067A**

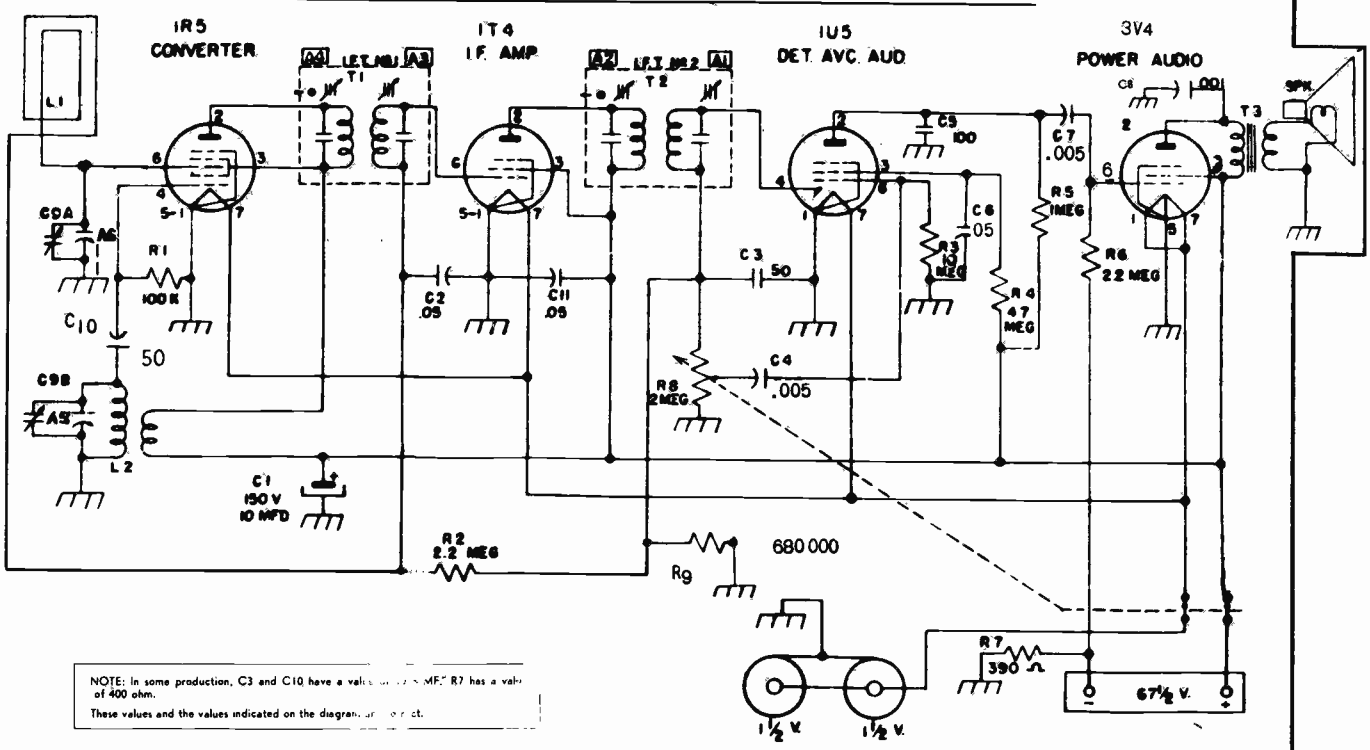

NOTE: In some production, C3 and C10 have a value of .05 MF. R7 has a value of 400 ohm.
These values and the values indicated on the diagram are correct.

ALIGNMENT PROCEDURE

Volume Control—Maximum All Adjustments.

The equipment in column at right is required for aligning:

Signal Generator which will provide an accurately calibrated signal at the test frequencies as listed.

Output Indicating Meter; Non-Metallic Screwdriver.

Dummy Antenna —.1 mf.

Frequency Setting	SIGNAL GENERATOR Coupling Capacitor	SIGNAL GENERATOR Connection to Radio	Ground Connection	Variable Condenser Setting	ADJUST TRIMMERS TO MAXIMUM See Trimmer Illustration
455 KC	.1	CONTROL GRID OF 1R5	TO CHASSIS	CLOSED	1st AND 2nd I.F. A1 - A2 - A3 - A4
540 KC	.1	CONTROL GRID OF 1R5	TO CHASSIS	CLOSED	OSCILLATOR COIL SCREW
1640 KC	.1	CONTROL GRID OF 1R5	TO CHASSIS	WIDE OPEN	OSCILLATOR TRIMMER A5
1400 KC	.1	CONTROL GRID OF 1R5	TO CHASSIS	TO 1400 KC SIGNAL	ANTENNA TRIMMER A6

REPEAT PROCEDURE

TUBE AND TRIMMER CONDENSER LAYOUT

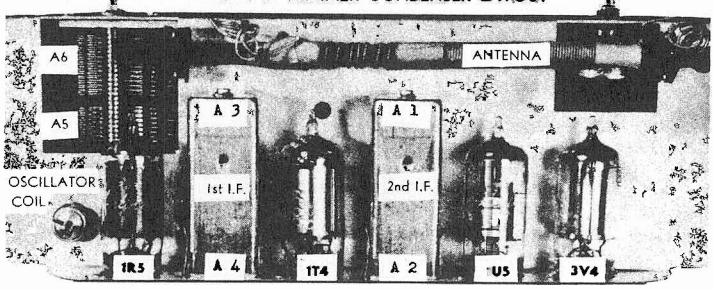

2 1½ Volt "A" Airline #62-23 Eveready size "D", Burgess # 2, Ray-O-Vac size "D"

1 67½ Volt "B" Airline #62-43 Eveready #467, Burgess type XXD, Ray-O-Vac type #4367 or equivalent.

MONTGOMERY WARD

PORTABLE RADIO

MODEL 15-GHM-1070A

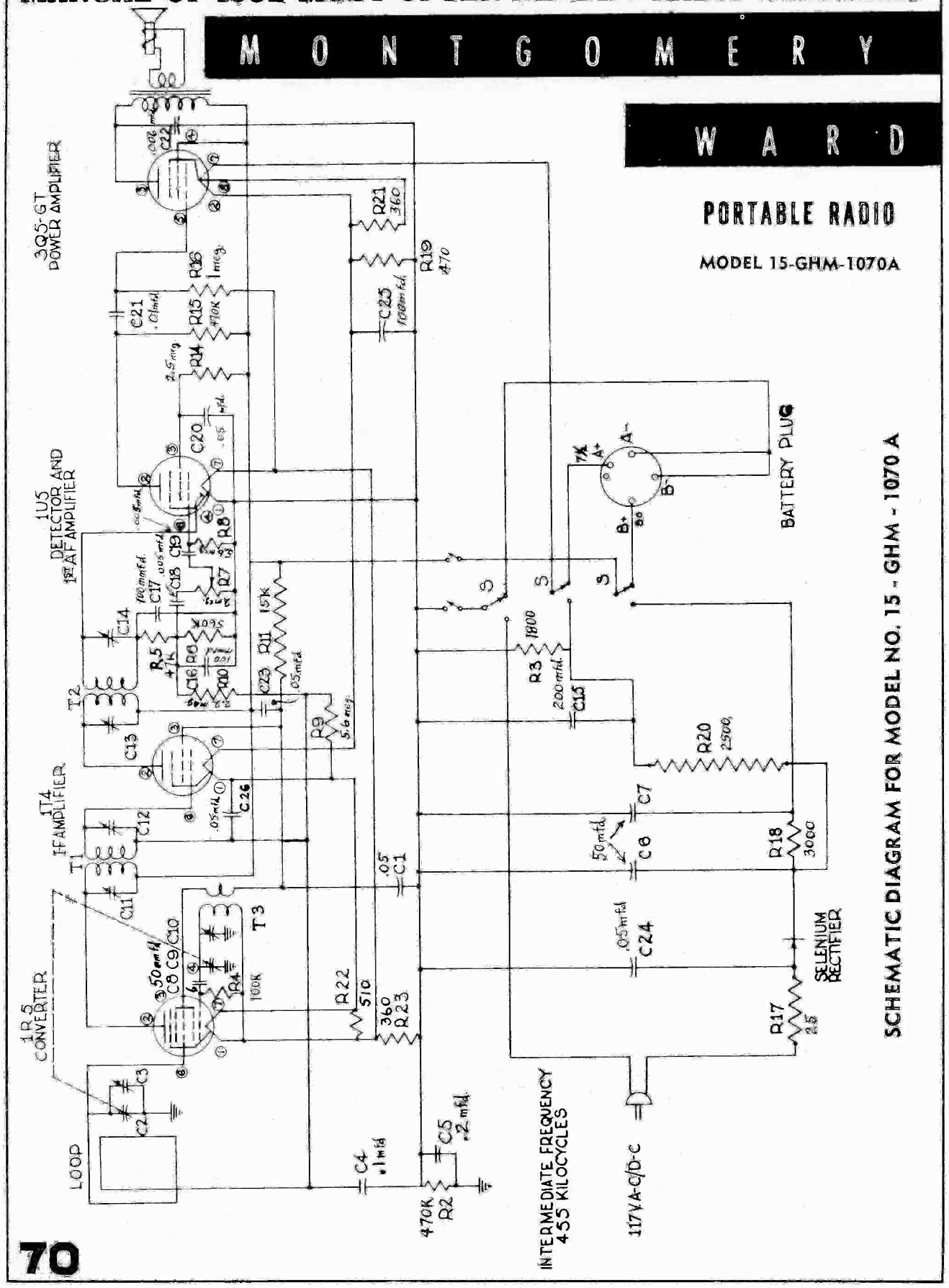

SCHEMATIC DIAGRAM FOR MODEL NO. 15 - GHM - 1070 A

MONTGOMERY WARD

Airline TABLE RADIO MODEL 15 GHM-1552A

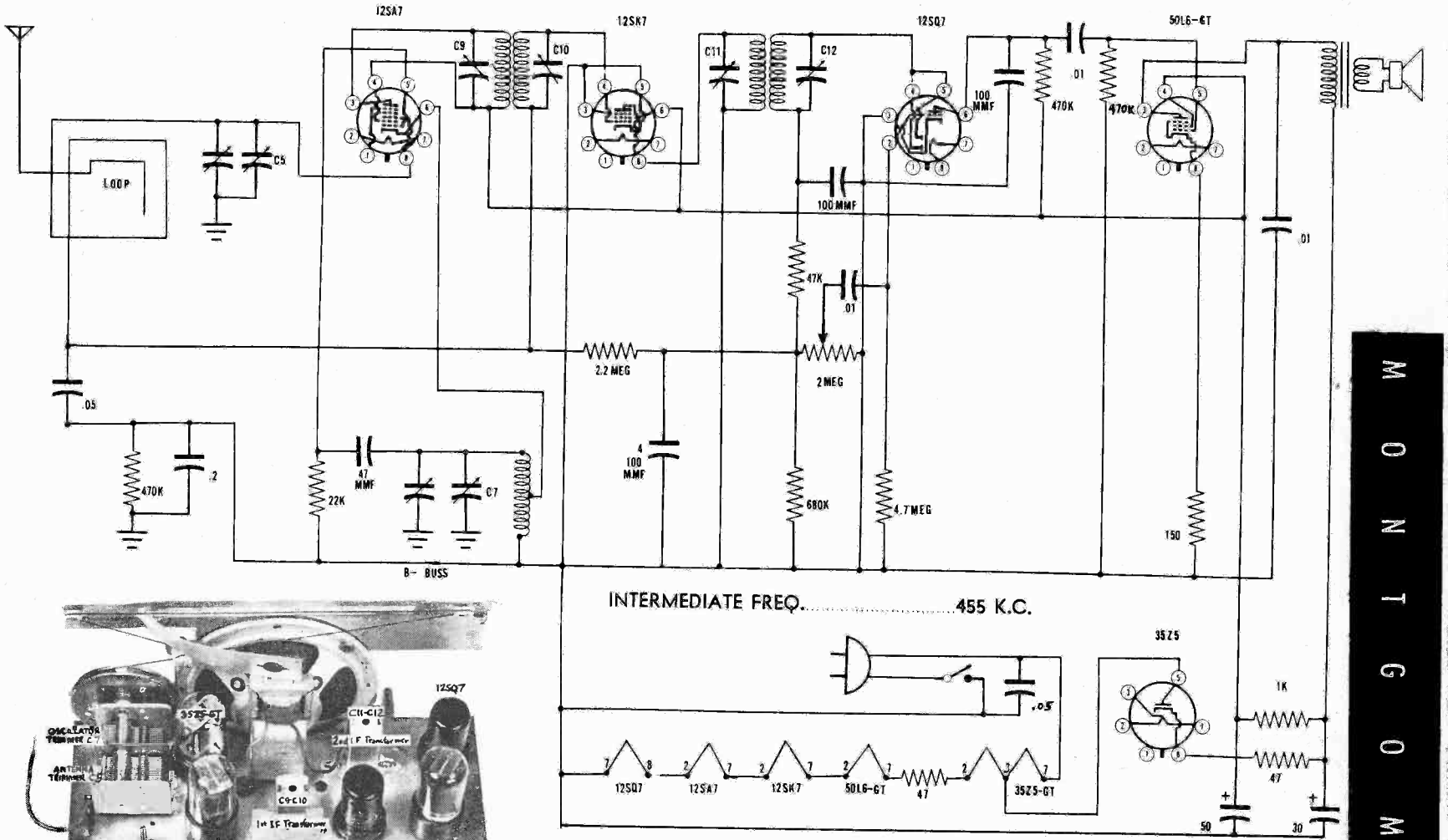

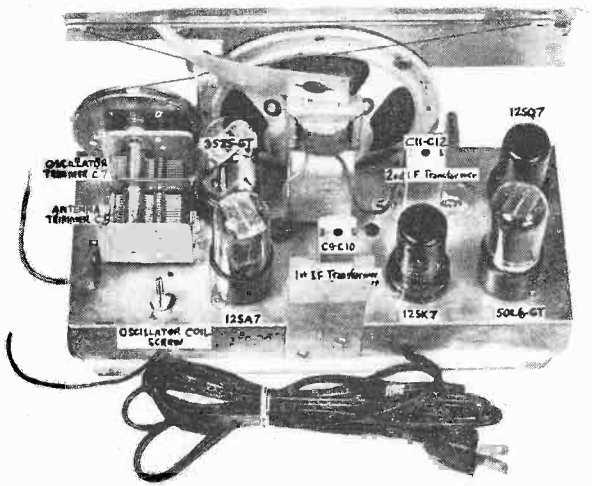

C10 is located on bottom of 1st I.F. Transformer.
C12 is located on bottom of 2nd I.F. Transformer.

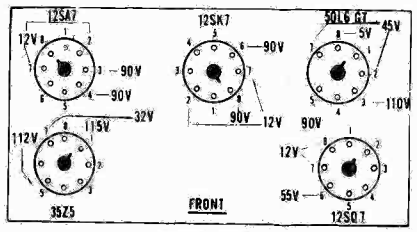

ALL VOLTAGES MEASURED BETWEEN B- BUSS AND POINTS INDICATED

MONTGOMERY WARD

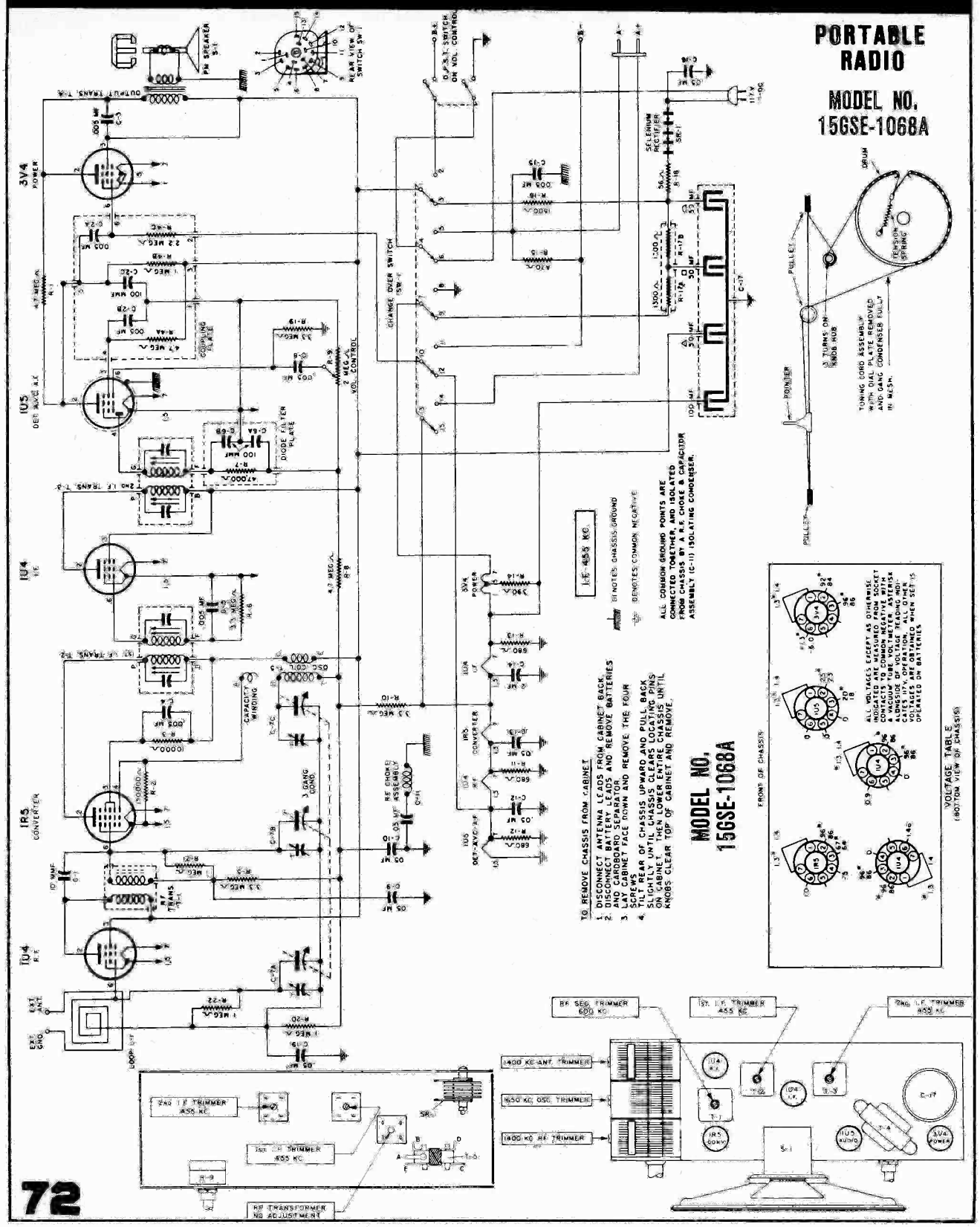

MANUAL OF 1952 MOST-OFTEN-NEEDED RADIO DIAGRAMS

MONTGOMERY WARD Model 15GSE-1595A. Models 25GSE-1555A and 25GSE-1556A use the same circuit, but differ in chassis layout and cabinet.

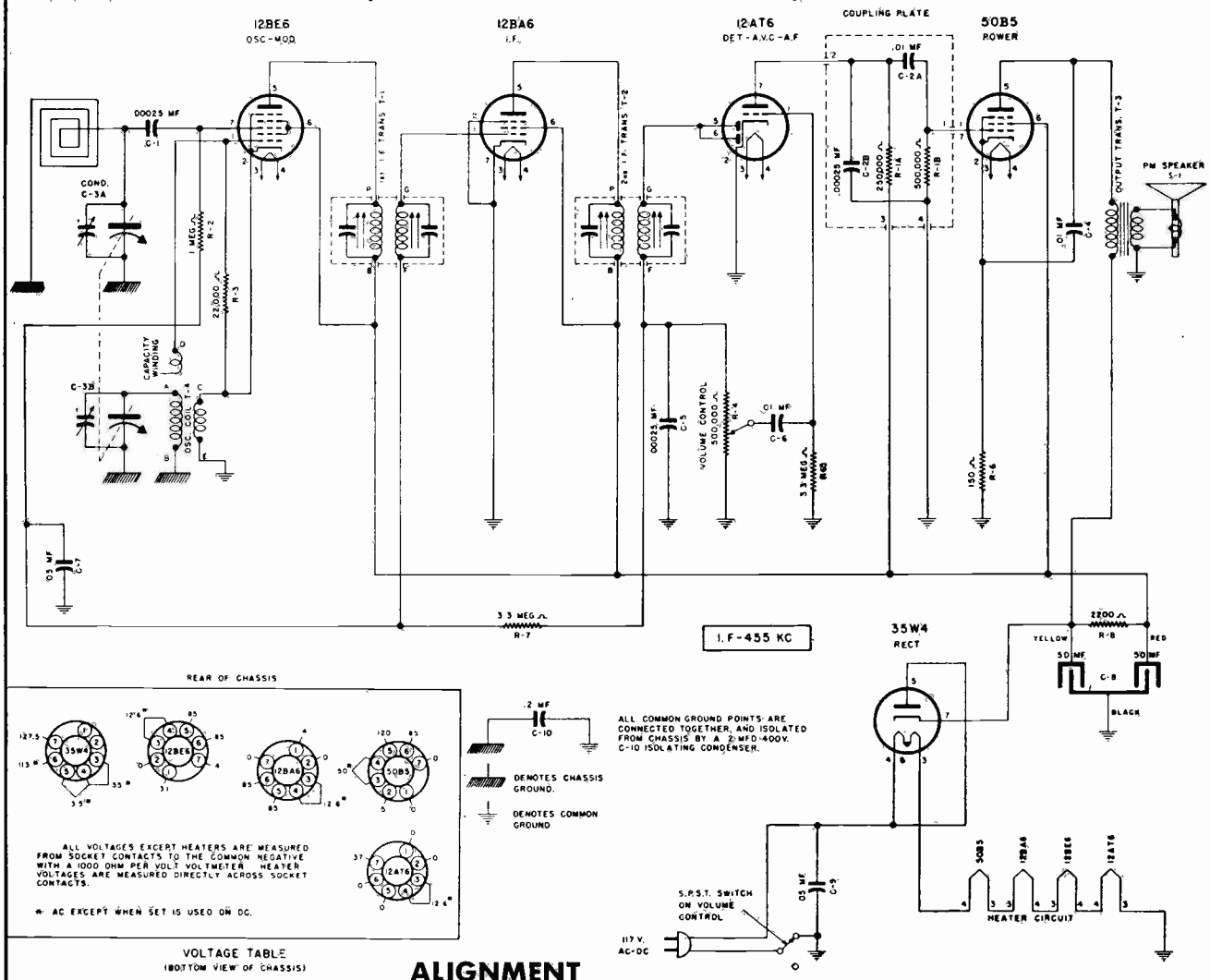

ALIGNMENT

WHEN ADJUSTING THE 1650 KC OSCILLATOR TRIMMER, remove chassis from cabinet and disconnect the loop connection wires from the loop. Attach a 1 megohm resistor across these connections and feed output of test oscillator across the 1 megohm resistor.

THE 1400 KC LOOP ANTENNA TRIMMER should be adjusted only after all other adjustments have been made. PLACE LOOP ANTENNA IN THE SAME POSITION IT WILL BE IN WHEN THE SET IS IN THE CABINET—APPROXIMATELY 5/8" SPACE BETWEEN LOOP AND CHASSIS.

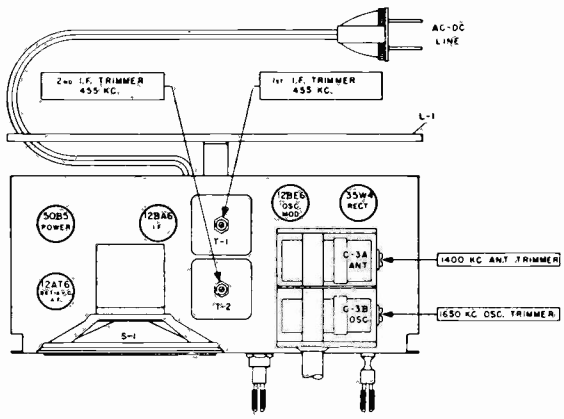

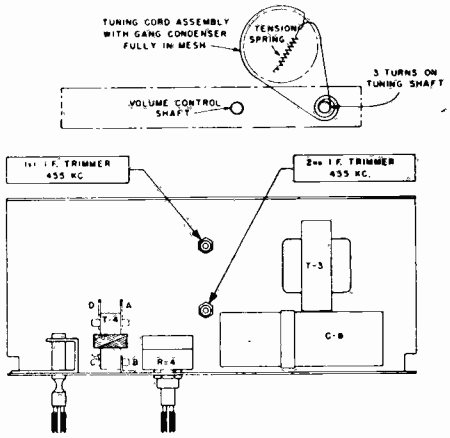

MONTGOMERY WARD Radio-Phonograph Model 15GSE-2764A

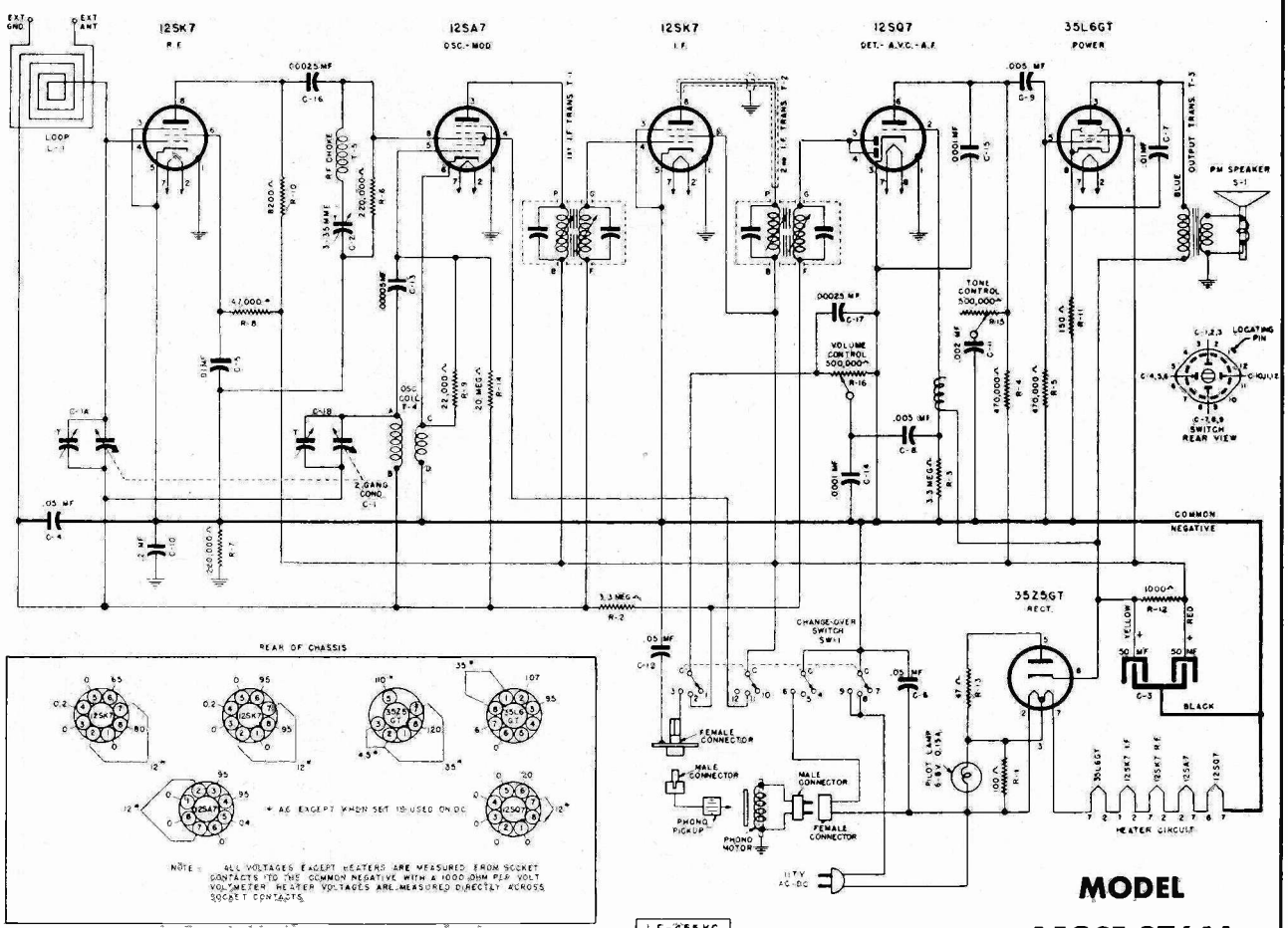

I.F.-455 KC

MODEL

15GSE-2764A

ALIGNMENT PROCEDURE

Check tuning dial adjustment by tuning gang condenser until plates touch maximum capacity stop (completely in mesh) at which point the dial needle must be exactly even with the last line at the low frequency end of the dial calibration.

Use an accurately calibrated test oscillator with some type of output measuring device.

THE LOOP MAY BE LEFT IN THE CABINET and the chassis pulled out of the cabinet just far enough for adjustment of the trimmers, or the loop and chassis may be removed from the cabinet and the loop placed in the same position and plane it will be in when both are mounted in cabinet.

Couple test oscillator to receiver loop by: (1) make loop consisting of 5 to 10 turns of No. 20 to No. 30 size wire, wound on a 2" or 3" form; (2) connect this loop across ouput of test oscillator; (3) place test oscillator loop near radio loop. **BE SURE THAT NEITHER LOOP MOVES WHILE ALIGNING.**

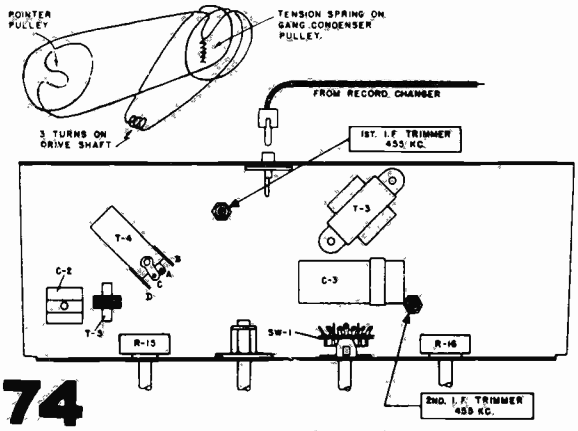

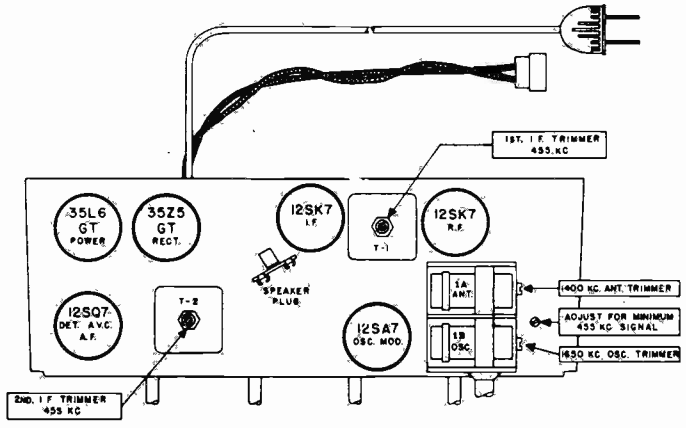

M O N T G O M E R Y W A R D

Radio Models 15GSL-1564B, 15GSL-1565B, 15GSL-1566B, and 15GSL-1567B

These models with a suffix "A" in place of "B", use the identical circuit.

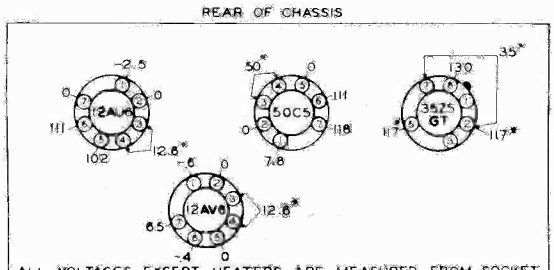

ALL VOLTAGES EXCEPT HEATERS ARE MEASURED FROM SOCKET CONTACTS TO THE COMMON NEGATIVE WITH A 20,000 OHM PER VOLT VOLTMETER. HEATER VOLTAGES ARE MEASURED DIRECTLY ACROSS SOCKET CONTACTS.

* A.C. EXCEPT WHEN SET IS USED ON D.C.

VOLTAGE TABLE
(BOTTOM VIEW OF CHASSIS)

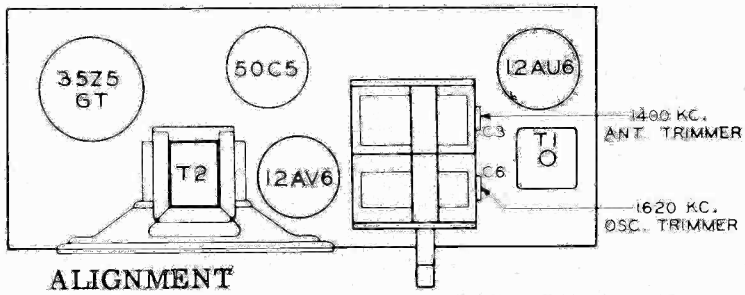

ALIGNMENT

SIGNAL GENERATOR				TUNER SETTING	ADJUST FOR MAXIMUM OUTPUT
FREQUENCY	COUPLING CAPACITOR	CONNECTION TO RADIO	GROUND CONNECTION		
455 Kc	.05 Mfd.	Rear stator plates of tuning condenser.	Buss Lead	Any point near center where no interfering signal is received.	Slugs at top and bottom of I.F. Coil T-1
1620 Kc	.05 Mfd.	Rear stator plates of tuning condenser.	Buss Lead	Exactly 1620 Kc.	Oscillator trimmer of Gang. (C6)
1400 Kc	--	Lay Generator lead near back of cabinet	Buss Lead	Exactly 1400 Kc.	Antenna trimmer of Gang. (C3)

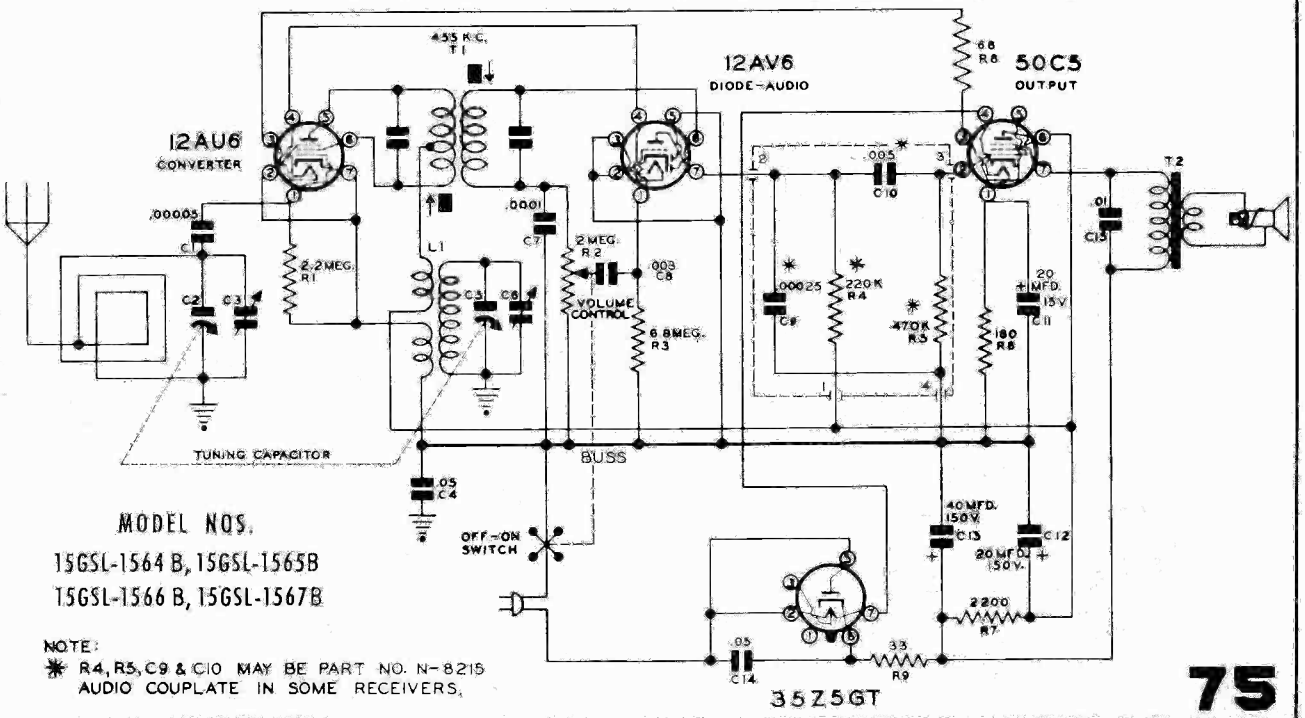

MODEL NOS.
15GSL-1564 B, 15GSL-1565B
15GSL-1566 B, 15GSL-1567B

NOTE:
* R4, R5, C9 & C10 MAY BE PART NO. N-8215 AUDIO COUPLATE IN SOME RECEIVERS.

RADIO-PHONO

MODEL NO.
25GAA-934 B

ALIGNMENT PROCEDURE

THE FOLLOWING EQUIPMENT IS REQUIRED FOR ALIGNING: A signal generator which will provide an accurately calibrated signal at the indicated test frequencies; an output indicating meter; a non-metallic screwdriver.

Radiation Loop: 2-turn loop, 6 inches in diameter.

CONDITIONS FOR ALIGNMENT:

Tone-Treble

Volume - Maximum

Selector Switch - "Radio" position

Test loop coupled loosely to receiver by spacing - receiver loop in same position as it will be with chassis in cabinet.

SIGNAL GENERATOR COUPLING	SIGNAL GENERATOR FREQUENCY	RADIO DIAL SETTING	OUTPUT METER	ADJUST MAXIMUM OUTPUT
LOOP	455 KC	Low End of Band	Across Voice Coil	C-8, C-7, C-6, C-5
LOOP	1620 KC	High End of Band		C-4
LOOP	1400 KC	1400 KC		C-3

LOCATION OF TUBES

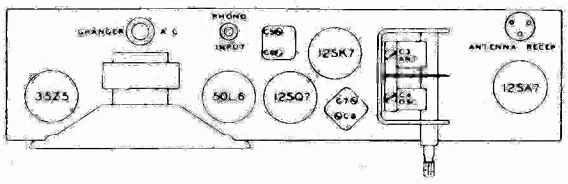

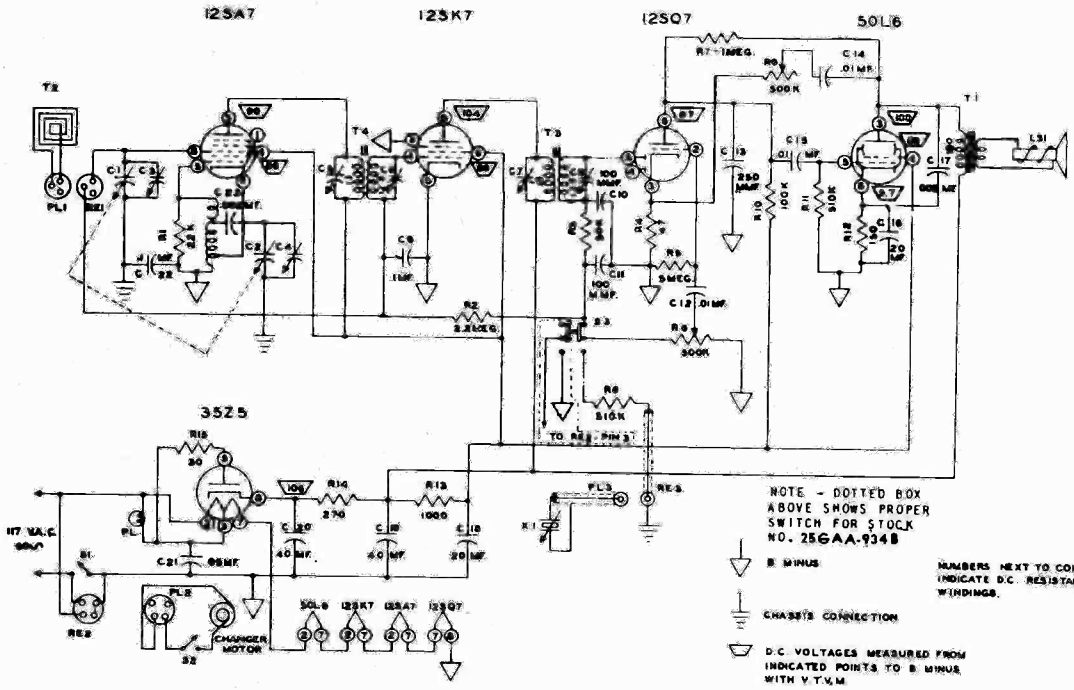

MONTGOMERY WARD

MODELS
25WG-1570B&C
25WG-1571B
25WG-1572B

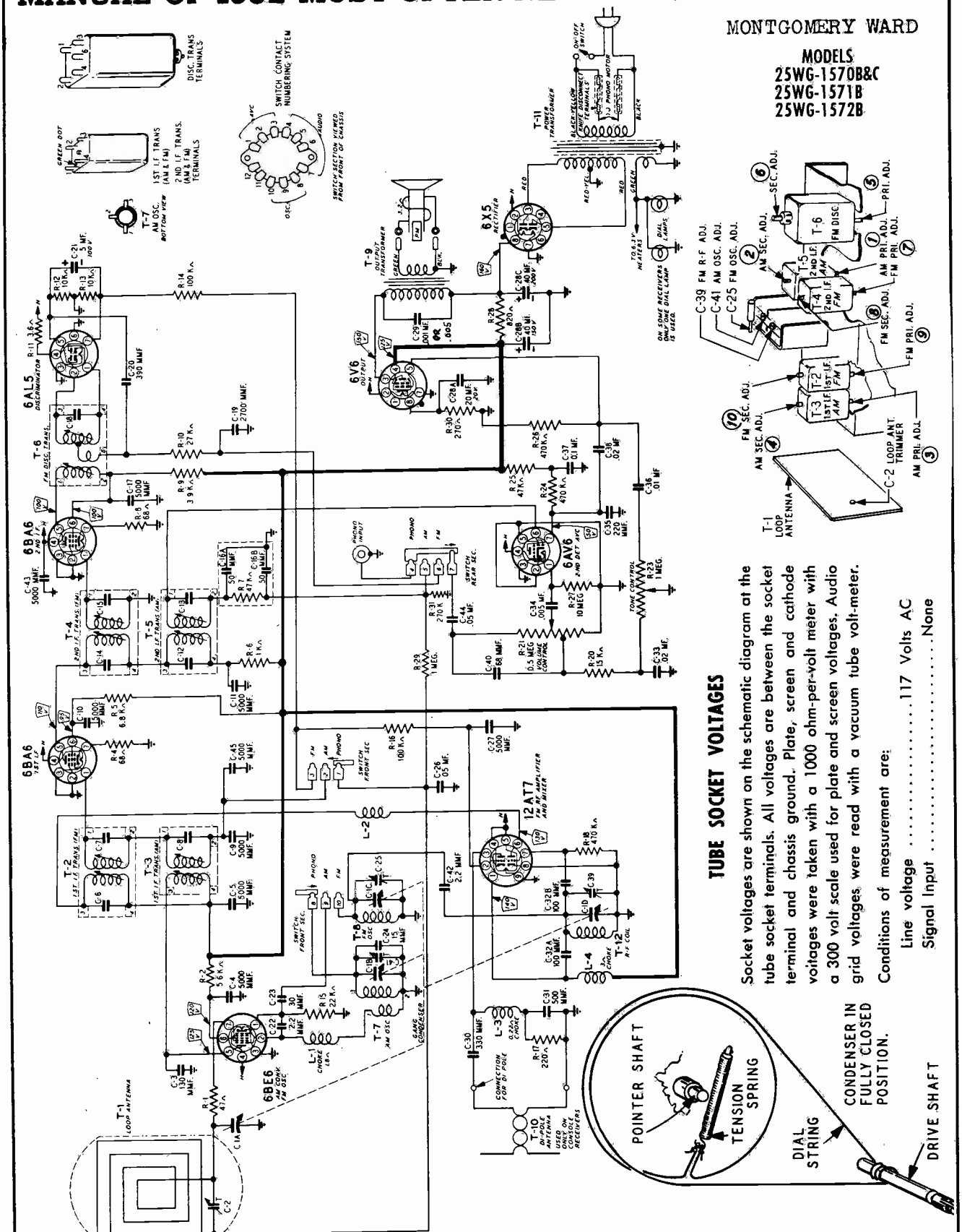

TUBE SOCKET VOLTAGES

Socket voltages are shown on the schematic diagram at the tube socket terminals. All voltages are between the socket terminal and chassis ground. Plate, screen and cathode voltages were taken with a 1000 ohm-per-volt meter with a 300 volt scale used for plate and screen voltages. Audio grid voltages were read with a vacuum tube volt-meter.

Conditions of measurement are:

Line voltage .....117 Volts AC
Signal Input .....None

See next page, over, for alignment facts.

MONTGOMERY WARD Models 25WG-1570B & C, 25WG-1571B, 25WG-1572B, continued

ALIGNMENT PROCEDURES

AM STAGES

The following is required for aligning:
An All Wave Signal Generator Which Will Provide an Accurately Calibrated Signal at the Test Frequencies as Listed.
Output Indicating Meter, Non-Metallic Screwdriver, Dummy Antennas — .1 mf, and 50 mmf.

Volume Control Maximum all Adjustments.
Connect Radio Chassis to Ground Post of Signal Generator with a Short Heavy Lead.
Allow Chassis and Signal Generator to "Heat Up" for Several Minutes.

SIGNAL GENERATOR						
FREQUENCY SETTING	CONNECT GENERATOR OUTPUT TO	THROUGH DUMMY ANTENNA	CONNECT GROUND TO	GANG CONDENSER SETTING	ADJUST	ADJUST FOR
455 KC	Control Grid 1st 6BA6 Pin No. 1	.1 mf	Chassis Base	Rotor Fully Open	2nd I.F. Pri. (1) and Sec. (2)	Maximum Output
455 KC	Control Grid 6BE6 Pin No. 7 1st Det.	.1 mf	Chassis Base	Rotor Fully Open	1st I.F. Pri. (3) and Sec. (4)	Maximum Output
455 KC	Control Grid 6BE6 Pin No. 7	.1 mf	Chassis Base	Rotor Fully Open	2nd I-F Pri. (1) and Sec. (2)	Maximum Output
1620 KC	Control Grid 6BE6 Pin No. 7	.1 mf	Chassis Base	Rotor Fully Open	Oscillator C-41	Maximum Output
1400 KC	External Antenna Terminal	50 mmf	Chassis Base	Turn Rotor to Max. Output. Set Pointer to 1400 KC See Note A	Antenna C-2	Maximum Output

NOTE A—If the pointer is not at 1400 KC on the dial, reset pointer to the 1400 KC mark on the dial scale.

FM STAGES

The following is required for aligning:
An accurately calibrated signal generator providing unmodulated signals at the test frequencies listed below.
Non-metallic screwdriver.
Dummy Antennas and I-F Loading Resistor—2500 mmf, 300 ohms

Zero center scale DC vacuum tube voltmeter having a range of approximately 3 volts.
(If a zero center scale meter is not available, a standard scale vacuum tube voltmeter may be used by reversing the meter connections for negative readings).
Allow chassis and signal generator to "Heat Up" for several minutes.

SIGNAL GENERATOR							
	FREQUENCY SETTING	CONNECT GENERATOR OUTPUT TO	THROUGH DUMMY ANTENNA	BAND SWITCH SETTING	GANG CONDENSER SETTING	ADJUST	ADJUST FOR
Discriminator	10.7 MC	6BA6 2nd I-F Pin 1 and Chassis	2500 mmf	FM	Rotor Fully Open	Disc. Pri. (5) Note A	Maximum Deflection
	10.7 MC	6BA6 2nd I-F Pin 1 and Chassis	2500 mmf	FM	Rotor Fully Open	Disc. Sec. (6) Note B	
I-F	10.7 MC Note C	6BA6 1st I-F Pin 1 and Chassis	2500 mmf	FM	Rotor Fully Open	2nd I-F Pri. (7) Sec. (8) Note D	Maximum Deflection
Discriminator	10.7 MC	6BA6 1st I-F Pin 1 and Chassis	2500 mmf	FM	Rotor Fully Open	Disc. Pri. (5) Note D	Maximum Deflection
I-F	10.7 MC	Junction C-32A & B (Dual 100 mmf cond.) And chassis	2500 mmf	FM	Rotor Fully Open	1st I-F Pri. (9) & Sec. (10) 2nd I-F Pri. (7) & Sec. (8) Disc. Pri. (5) In Order Shown Note D	Maximum Deflection
	10.7 MC	Same as above	2500 mmf	FM	Rotor Fully Open	Disc. Sec. (6) Note B	
RECHECK I-F ADJUSTMENTS IN ORDER GIVEN							
Oscillator	108.5	Disconnect the hank antenna and connect generator to dipole terminals with resistor in series.	300 ohms	FM	Rotor Fully Open	Osc. C-25	Deflection Maximum
Antenna	104.5	Same as above	300 ohms	FM	Tune rotor for max. AVC voltage	Ant. C-39	Maximum Deflection
RECHECK ANTENNA & OSC. ADJUSTMENTS IN ORDER GIVEN							

FM ALIGNMENT NOTES

NOTE A—The zero center scale DC vacuum tube voltmeter is to be connected between chassis ground and the AVC line. A signal of .1 volt must be fed into the receiver for this adjustment.
Note output voltage on the zero center DC vacuum tube voltmeter.

B—Disconnect zero center DC vacuum tube voltmeter from AVC and connect it at the audio takeoff point at the 27 K ohm resistor (R-10) and its junction with the terminal strip. Adjust for zero voltage indication.

NOTE C—AM I-F coils must be aligned before attempting to align the FM I-F coils.

NOTE D—Connect zero center DC vacuum tube voltmeter as in Note A. Adjust input to give same output on the zero center DC vacuum tube voltmeter as in Note A.

Motorola

CHASSIS **HS-303**

MODEL **72XM21**

Chassis HS-218, used in Models 7XM21 and 7XM22, is similar to Chassis HS-303 covered by information below and on the next page.

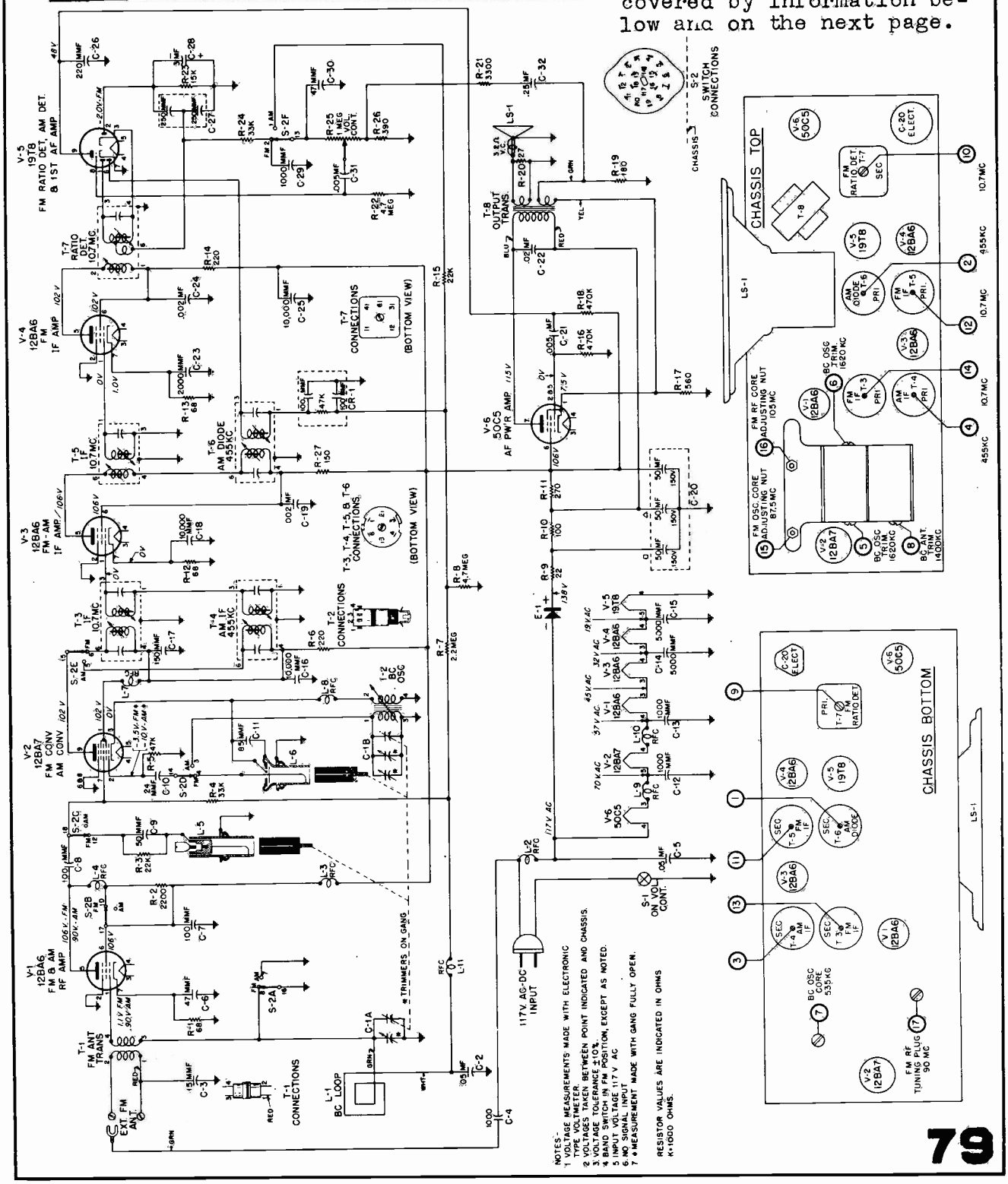

MOTOROLA Chassis HS-303, Model 72XM21, continued from preceding page.

BROADCAST BAND - IF & RF ALIGNMENT

Connect the AM signal generator as in chart below, with 400 cycle, 30% modulation.

Connect the output meter across the speaker voice coil. Throughout alignment reduce the generator output to a level which produces less than .40 volts across the voice coil, to avoid overloading the receiver.

Set the bandswitch to the AM position.

Turn the receiver volume control to maximum.

STEP	DUMMY ANTENNA	GENERATOR CONNECTION	GENERATOR FREQUENCY	GANG SETTING	ADJUST	REMARKS
IF ALIGNMENT						
1.	.1 mf	Grid of conv. V-2 (pin 7, 12BA7)	455 Kc	Fully opened	1, 2, 3 & 4 (IF cores)	Adjust for maximum.
RF ALIGNMENT						
2.	.1 mf	Grid of conv. V-2 (pin 7, 12BA7)	1620 Kc	Fully opened	5 (BC osc)	Adjust for maximum.*
3.		Across radiation loop**	1400 Kc	Tune in signal	8 (BC ant)	Adjust for maximum.

4. If, after the receiver has been aligned as above, it is found to be badly off calibration, it will be necessary to adjust oscillator core (7) as follows: connect the generator to the grid of the converter tube and, with the gang fully closed, adjust core (7) at 535 Kc. It is advisable to repeat the oscillator adjustments at 1620 Kc and 535 Kc several times until the tuning range is correct. Core (7) has been pre-set at the factory and normally should require no retuning.

* If difficulty is encountered in tuning trimmer (5), adjust trimmer (6) to ½ turn from tight.

**Connect generator output across 5" diameter, 5 turn loop and couple inductively to receiver loop. Keep loops at least 12" apart.

FM BAND - IF & RF ALIGNMENT

Connect the signal generator as in chart below, with no modulation.

Set the bandswitch to the FM position.

Except in step 2 below, connect the electronic voltmeter across resistor R-23 (15K) in the ratio detector stage.

Throughout alignment reduce the signal generator output to a value which produces no more than a 5 volt rise above no signal voltage, to avoid overloading the receiver.

In step 2 below, connect two 100K ohm resistors in series across R-23. Connect the electronic voltmeter between the volume control side of resistor R-24 (33K) and the junction of the two 100K resistors, with the low side of the meter at the 100K resistors.

STEP	DUMMY ANTENNA	GENERATOR CONNECTION	GENERATOR FREQUENCY	TUNER SETTING	ADJUST	REMARKS
IF ALIGNMENT						
1.	1000 mmf	Grid of conv. V-2 (pin 7, 12BA7)	10.7 Mc	Fully opened	9, 11, 12, 13 & 14 (IF cores)	Adjust for maximum.
2.	1000 mmf	Grid of conv. V-2 (pin 7, 12BA7)	10.7 Mc	Fully opened	10 (ratio det sec)	Adjust for zero. (Connect meter as in step 6 above).
RF ALIGNMENT						
3.	270 ohms	FM terminals on loop	87.5 Mc	Fully closed	15 (osc adj nut)	Adjust for maximum.
4.	-	-	-	Fully closed	16 (RF adj nut)	Turn counterclockwise until core is at bottom of pipe, then turn four turns clockwise.
5.	270 ohms	FM terminals on loop	90 Mc	Tune in signal	17 (RF tuning plug)	Adjust for maximum.
6.	270 ohms	FM terminals on loop	105 Mc	Tune in signal	16 (RF adj nut)	Adjust for maximum.
7.	-	-	-	-	-	Repeat steps 5 & 6 until no further adjustment is necessary.

See previous page for trimmer location charts.

MOTOROLA, INC.

MODEL 42B1

CHASSIS HS-306

POWER SUPPLY - Operates from the following batteries:
Two 1-1/2V size "D" flashlight cells
Use: Eveready 950
or Burgess 2
or equivalent

One 67-1/2V "B" Battery
Use: Eveready 457
or Burgess K45
or equivalent

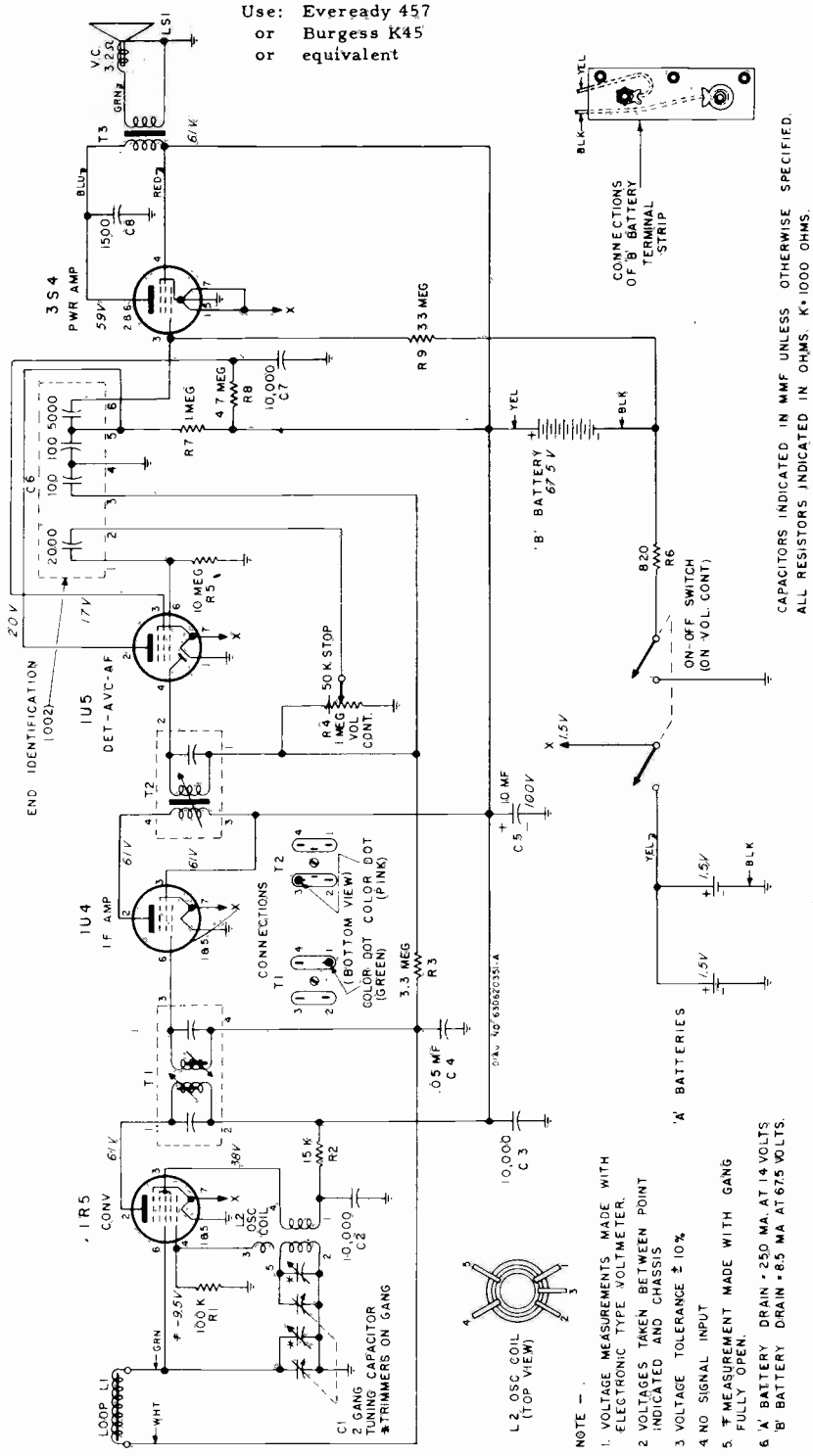

NOTE -

1. VOLTAGE MEASUREMENTS MADE WITH ELECTRONIC TYPE VOLTMETER.
2. VOLTAGES TAKEN BETWEEN POINT INDICATED AND CHASSIS
3. VOLTAGE TOLERANCE ± 10%
4. NO SIGNAL INPUT
5. ∓ MEASUREMENT MADE WITH GANG FULLY OPEN.
6. 'A' BATTERY DRAIN = 250 MA. AT 1.4 VOLTS
   'B' BATTERY DRAIN = 8.5 MA AT 67.5 VOLTS.

ALIGNMENT CHART

STEP	DUMMY ANTENNA	GENERATOR CONNECTION	GENERATOR FREQUENCY	GANG SETTING	ADJUST	REMARKS
IF ALIGNMENT						
1.	.1 mf	Grid of conv. (pin 6, 1R5)	455 Kc	Fully open	1, 2 & 3 (IF cores)	Adjust for maximum
RF ALIGNMENT						
2.	.1 mf	Grid of conv. (pin 6, 1R5)	1620 Kc	Fully open	4 (Osc)	Adjust for maximum
3.	-	Radiation loop*	1400 Kc	Tune for max	5 (Ant)	Adjust for maximum

*Connect generator output across 5" diameter, 5-turn loop and couple inductively to receiver loop. Keep loops at 12" apart.

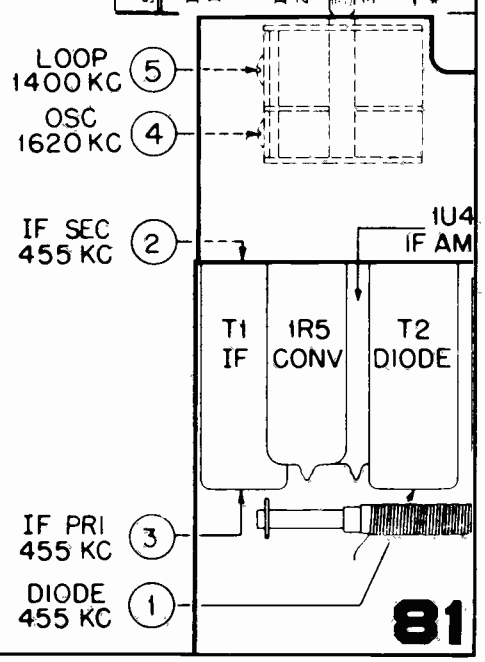

MANUAL OF 1952 DIAGRAMS

MOTOROLA, INC.

MODEL 52B1U

CHASSIS HS-305

ALIGNMENT CHART

STEP	DUMMY ANTENNA	GENERATOR CONNECTION	GENERATOR FREQUENCY	GANG SETTING	ADJUST	REMARKS
IF ALIGNMENT						
1.	.1 mf	Grid of conv (pin 6, 1R5)	455 Kc	Fully open	1, 2 & 3 (IF cores)	Adjust for maximum.
RF ALIGNMENT						
2.	.1 mf	Grid of conv (pin 6, 1R5)	1620 Kc	Fully open	4 (Osc)	Adjust for maximum.
3.	-	-	-			Install batteries in chassis, leaving output meter connected to speaker.
4.		Radiation loop*	1400 Kc	Tune for max.	5 (Ant)	Adjust for maximum.

*Connect generator output across 5" diameter, 5 turn loop and couple inductively to receiver loop. Keep loops at least 12" apart.

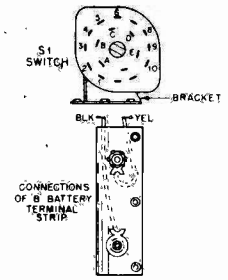

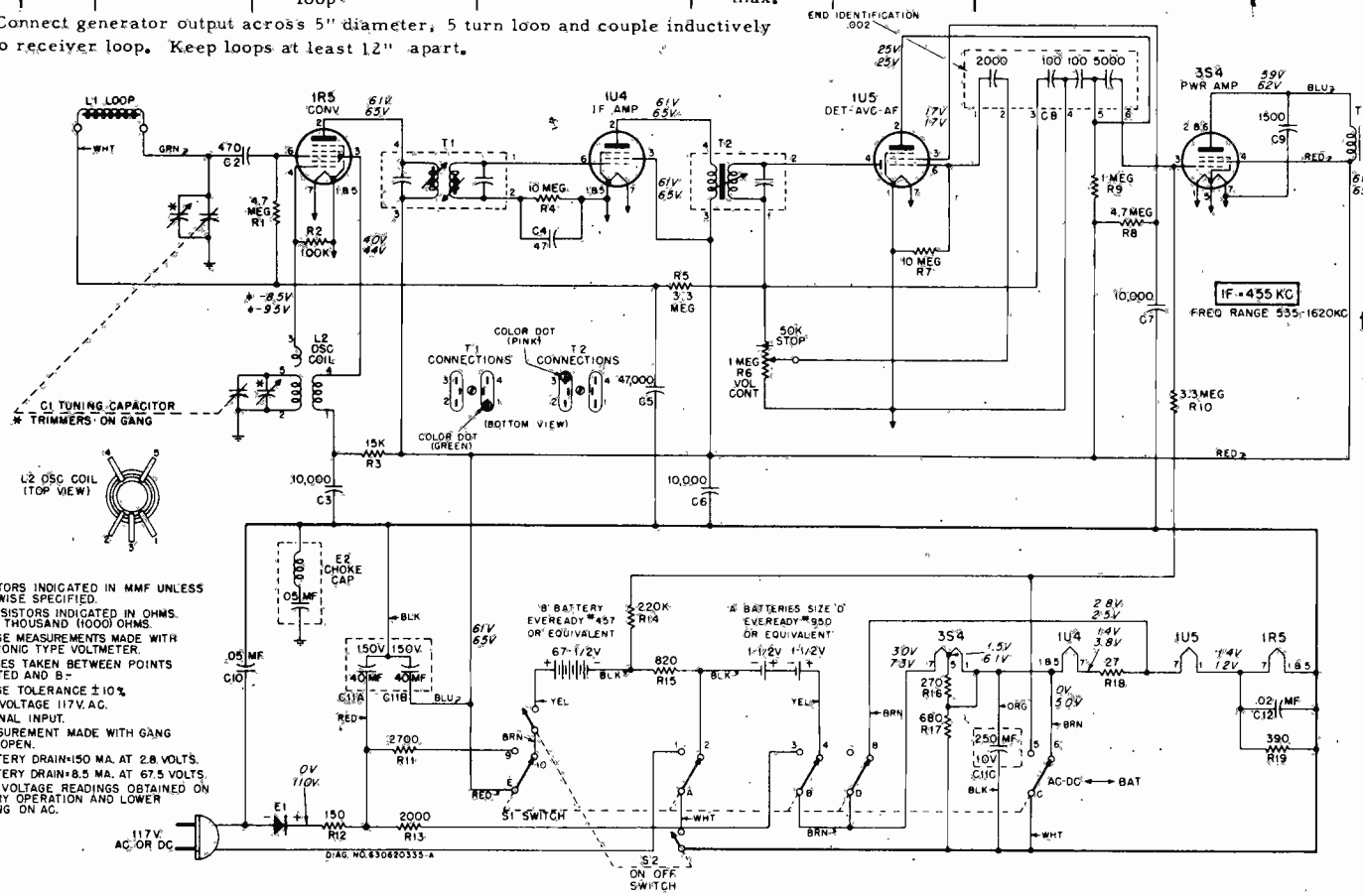

NOTE:-
CAPACITORS INDICATED IN MMF UNLESS OTHERWISE SPECIFIED.
ALL RESISTORS INDICATED IN OHMS. K= ONE THOUSAND (1000) OHMS.
VOLTAGE MEASUREMENTS MADE WITH ELECTRONIC TYPE VOLTMETER.
VOLTAGES TAKEN BETWEEN POINTS INDICATED AND B:-
VOLTAGE TOLERANCE ±10%
INPUT VOLTAGE 117V. A.C.
NO SIGNAL INPUT.
* MEASUREMENT MADE WITH GANG FULLY OPEN.
'A' BATTERY DRAIN=150 MA. AT 2.8 VOLTS.
B BATTERY DRAIN=8.5 MA. AT 67.5 VOLTS.
UPPER VOLTAGE READINGS OBTAINED ON BATTERY OPERATION AND LOWER READING ON AC.

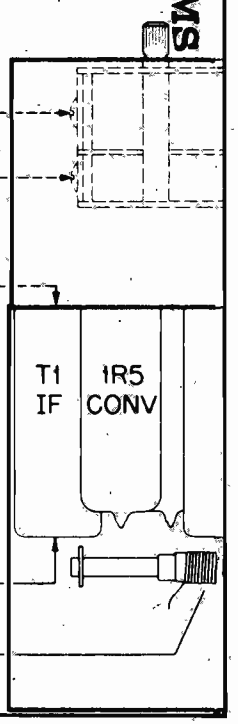

MOTOROLA, INC.

MODELS 62L1U 62L2U 62L3U

CHASSIS HS-308

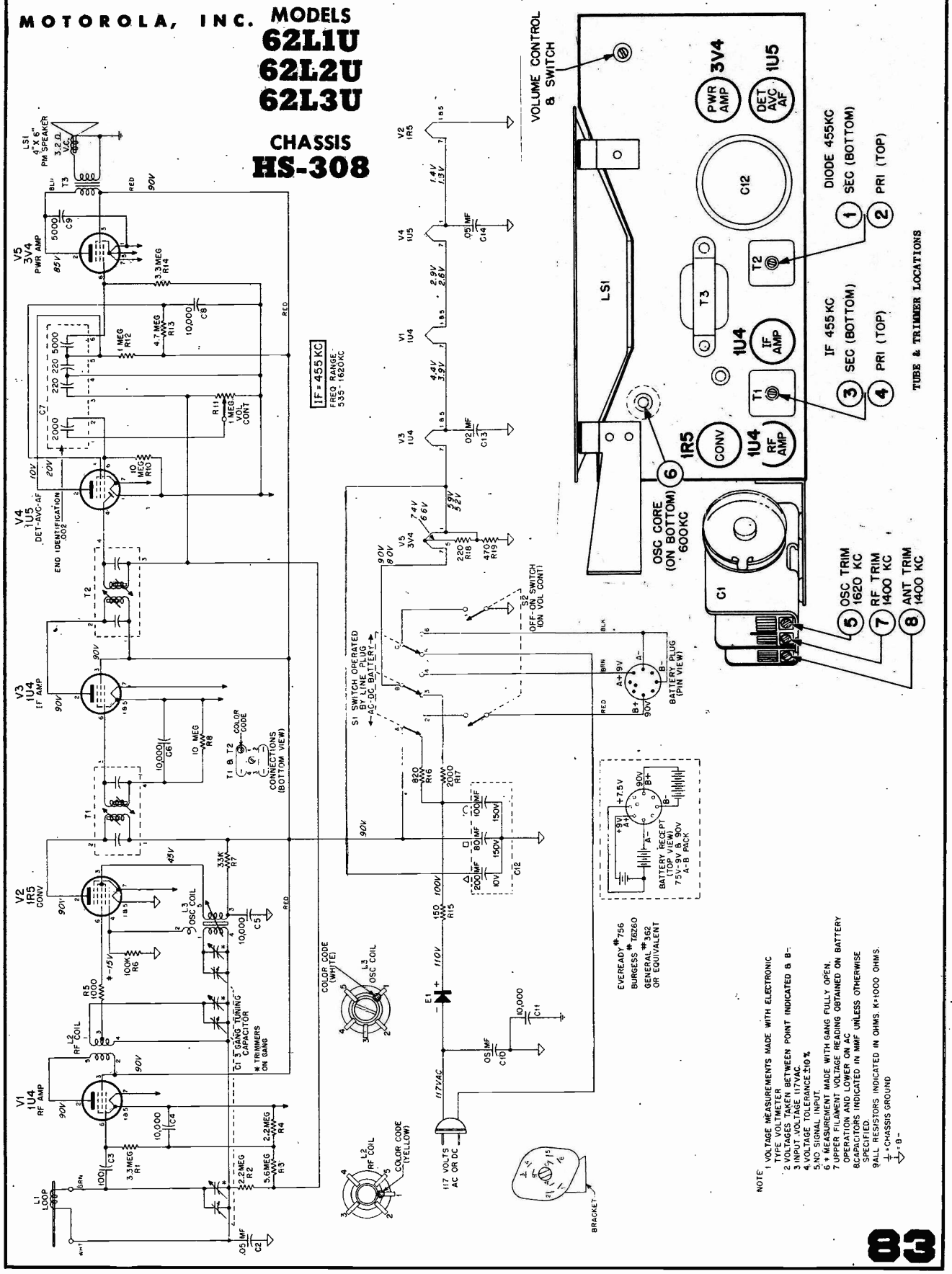

MOTOROLA, INC.

MODELS
52C6
52C7
52C8
CHASSIS
HS-310

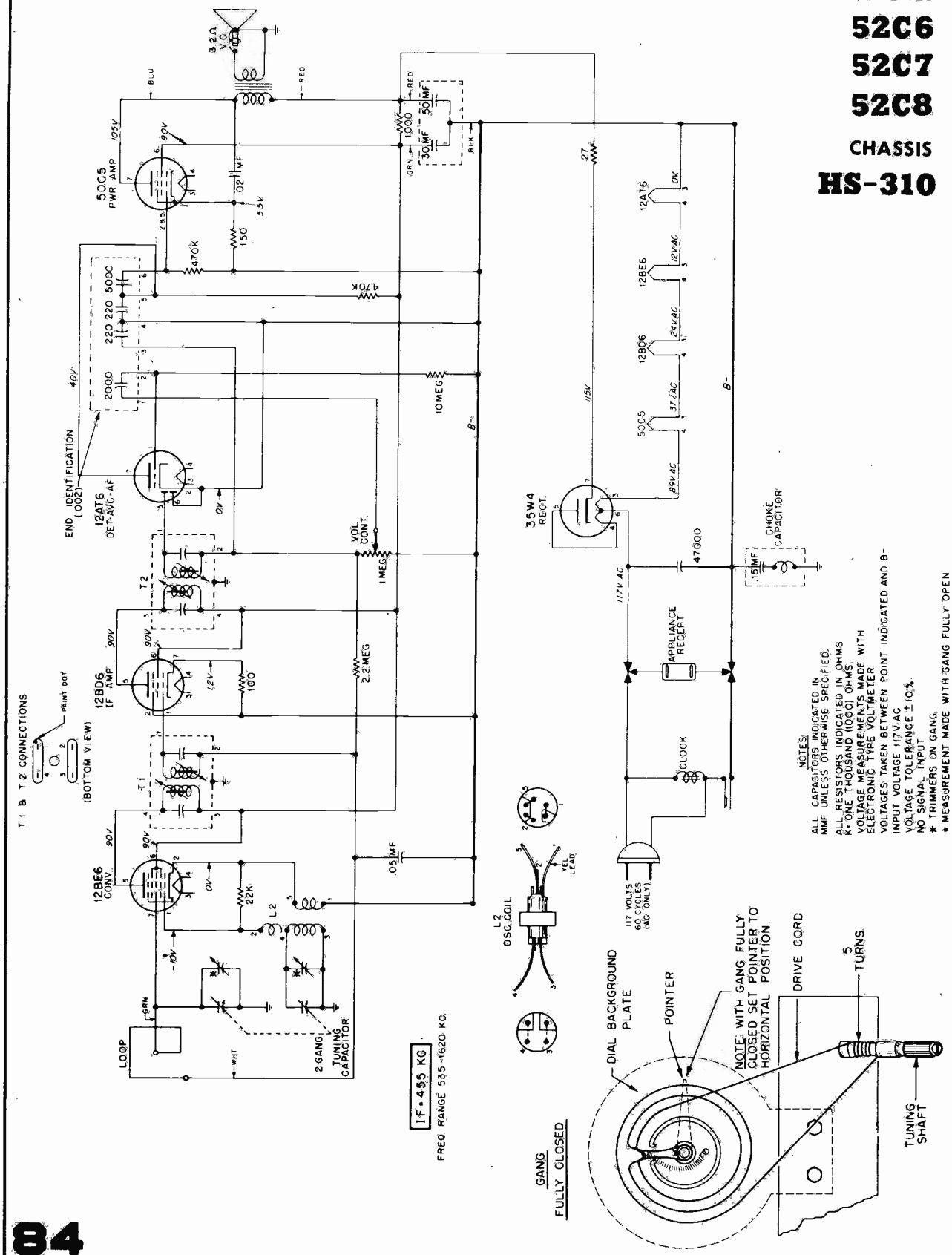

MOTOROLA, INC.

MODELS

52X11U
52X12U
52X13U

CHASSIS

HS-312

You will find that Motorola Models 52H11U, 52H12U, 52H13U, & 52H14U, using Chassis HS-313, have a similar circuit, but slightly different chassis layout. CR1 is omitted, C3 is .047 mfd.

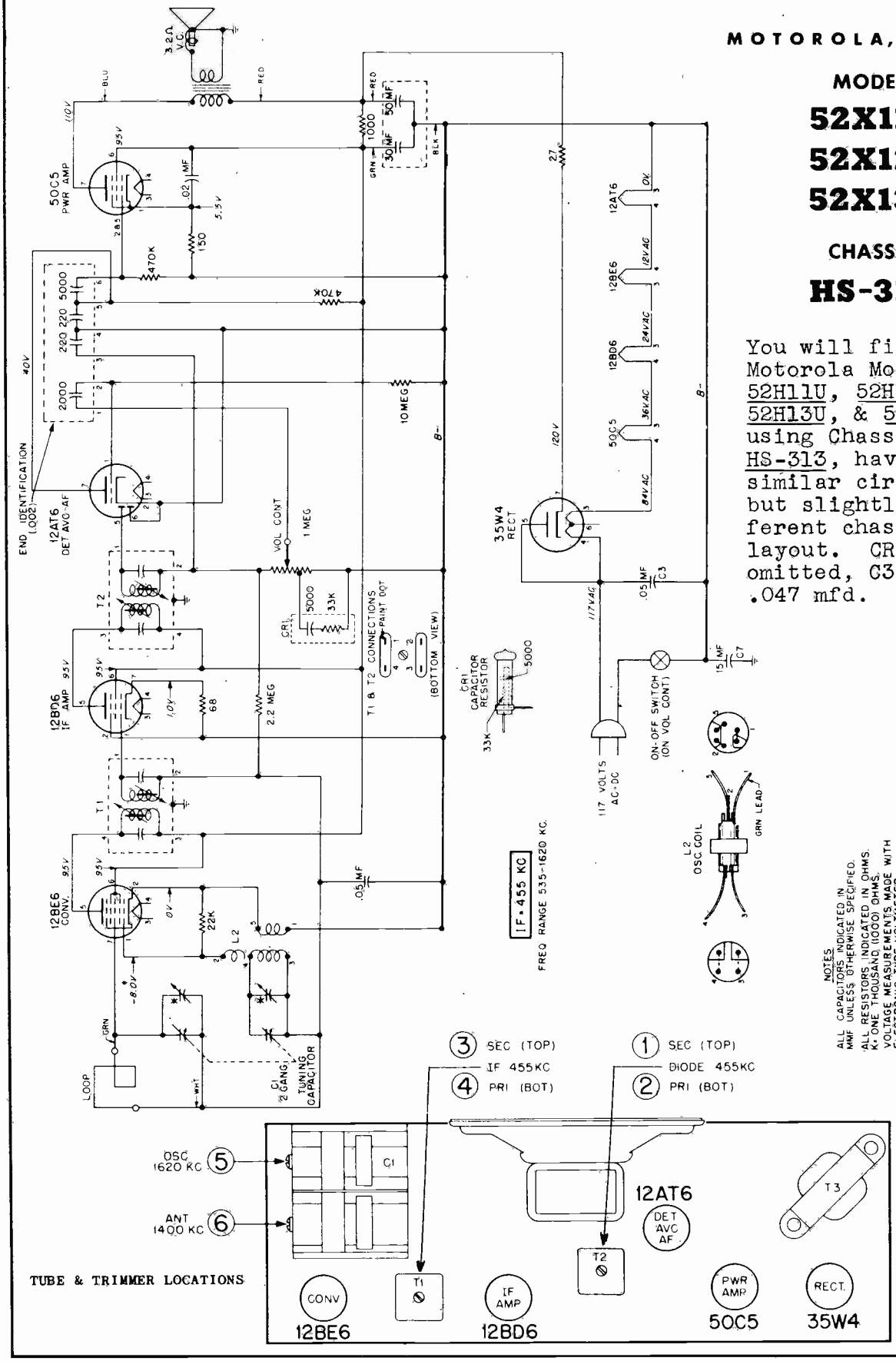

TUBE & TRIMMER LOCATIONS

MOTOROLA, INC.

CHASSIS **HS-314**

MODELS **62X11U 62X12U 62X13U**

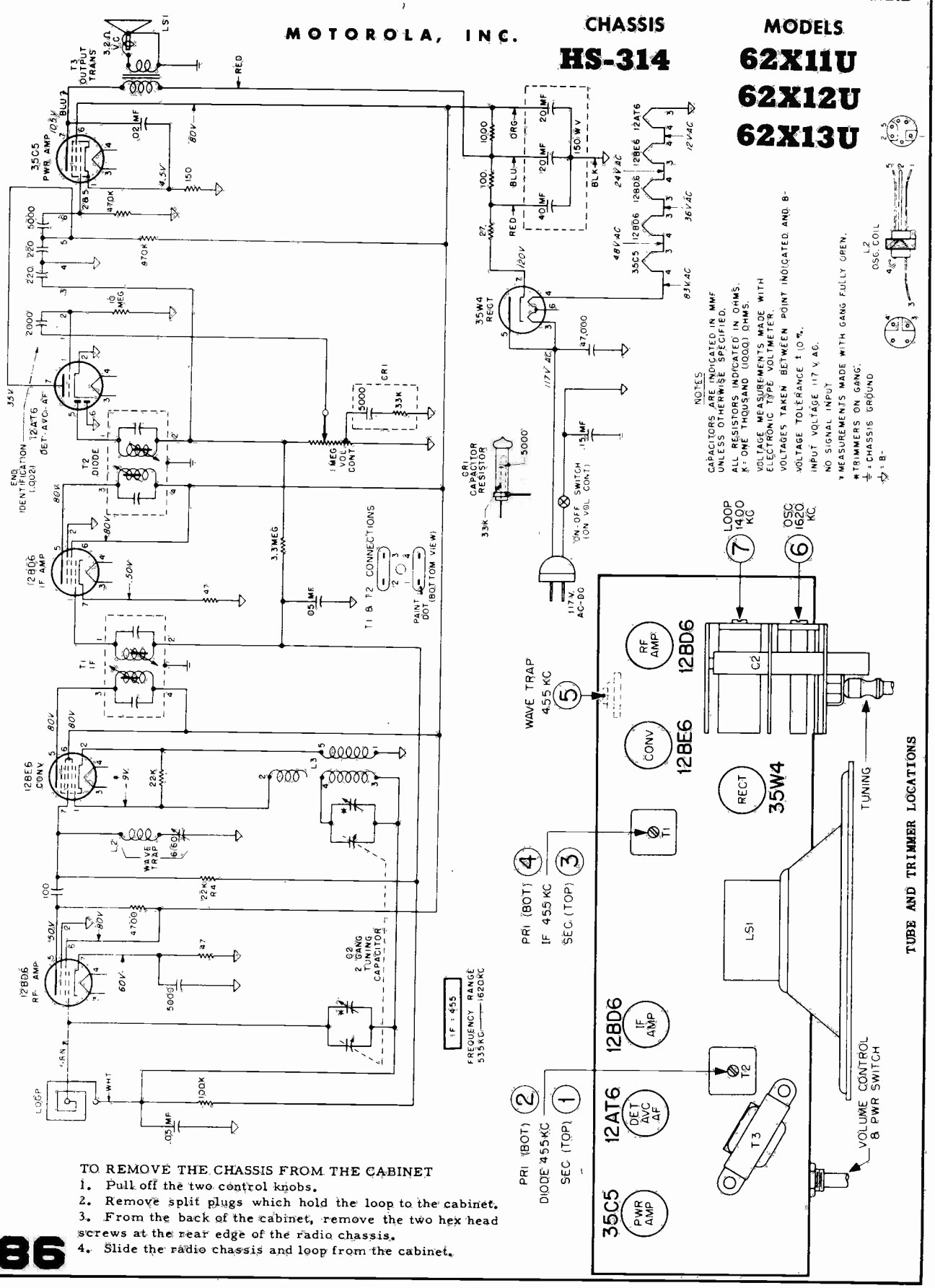

TO REMOVE THE CHASSIS FROM THE CABINET

1. Pull off the two control knobs.
2. Remove split plugs which hold the loop to the cabinet.
3. From the back of the cabinet, remove the two hex head screws at the rear edge of the radio chassis.
4. Slide the radio chassis and loop from the cabinet.

MOTOROLA, INC.

(See bottom of page for list of additional similar models)

MODELS

52R11U
52R12U
52R13U
52R14U
52R15U
52R16U

CHASSIS

HS-315

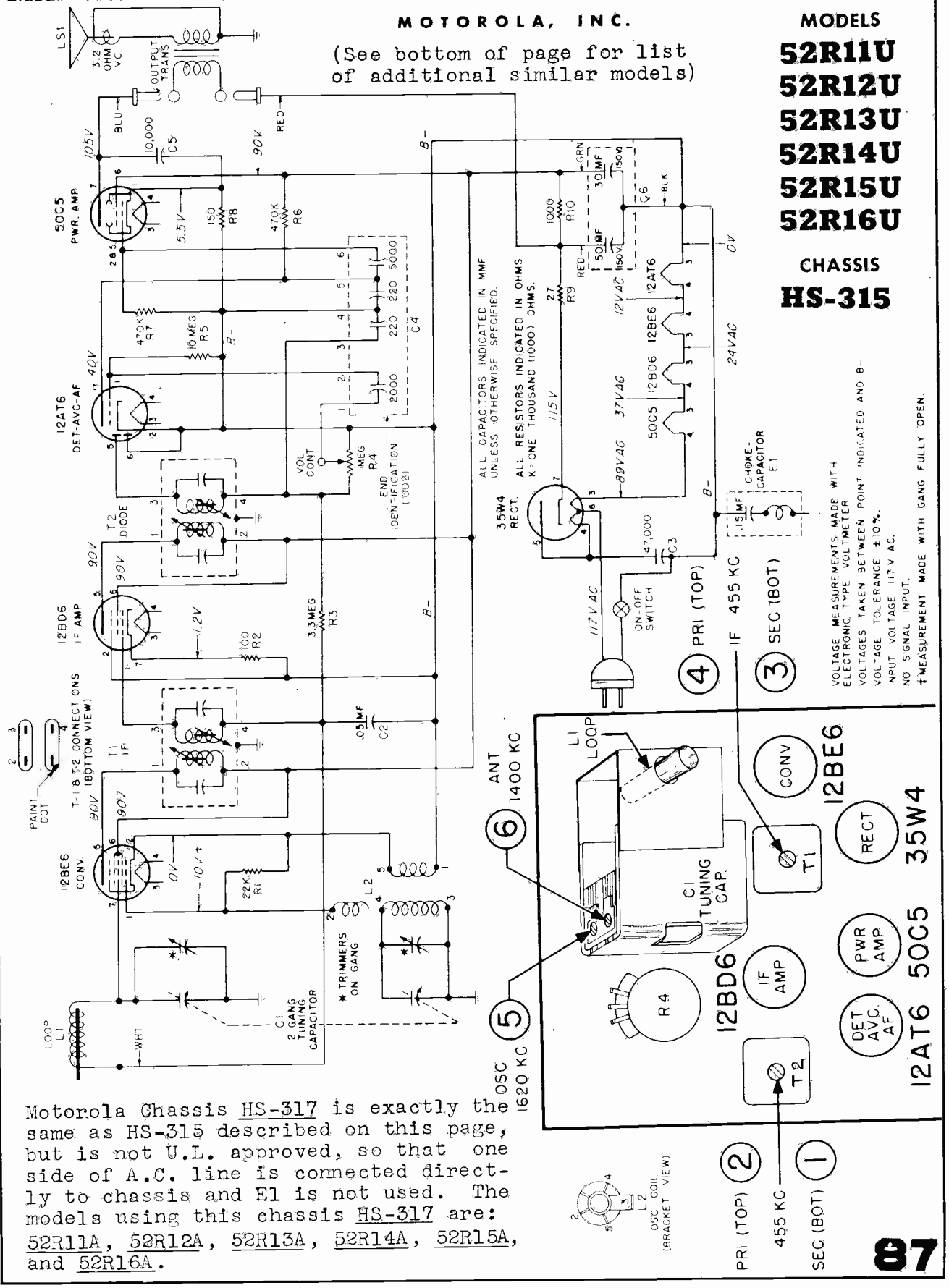

Motorola Chassis HS-317 is exactly the same as HS-315 described on this page, but is not U.L. approved, so that one side of A.C. line is connected directly to chassis and El is not used. The models using this chassis HS-317 are: 52R11A, 52R12A, 52R13A, 52R14A, 52R15A, and 52R16A.

Motorola, Inc.

MODEL WILLYS WS2C

Model WS1C is very similar to WS2C, but uses a PM type speaker.

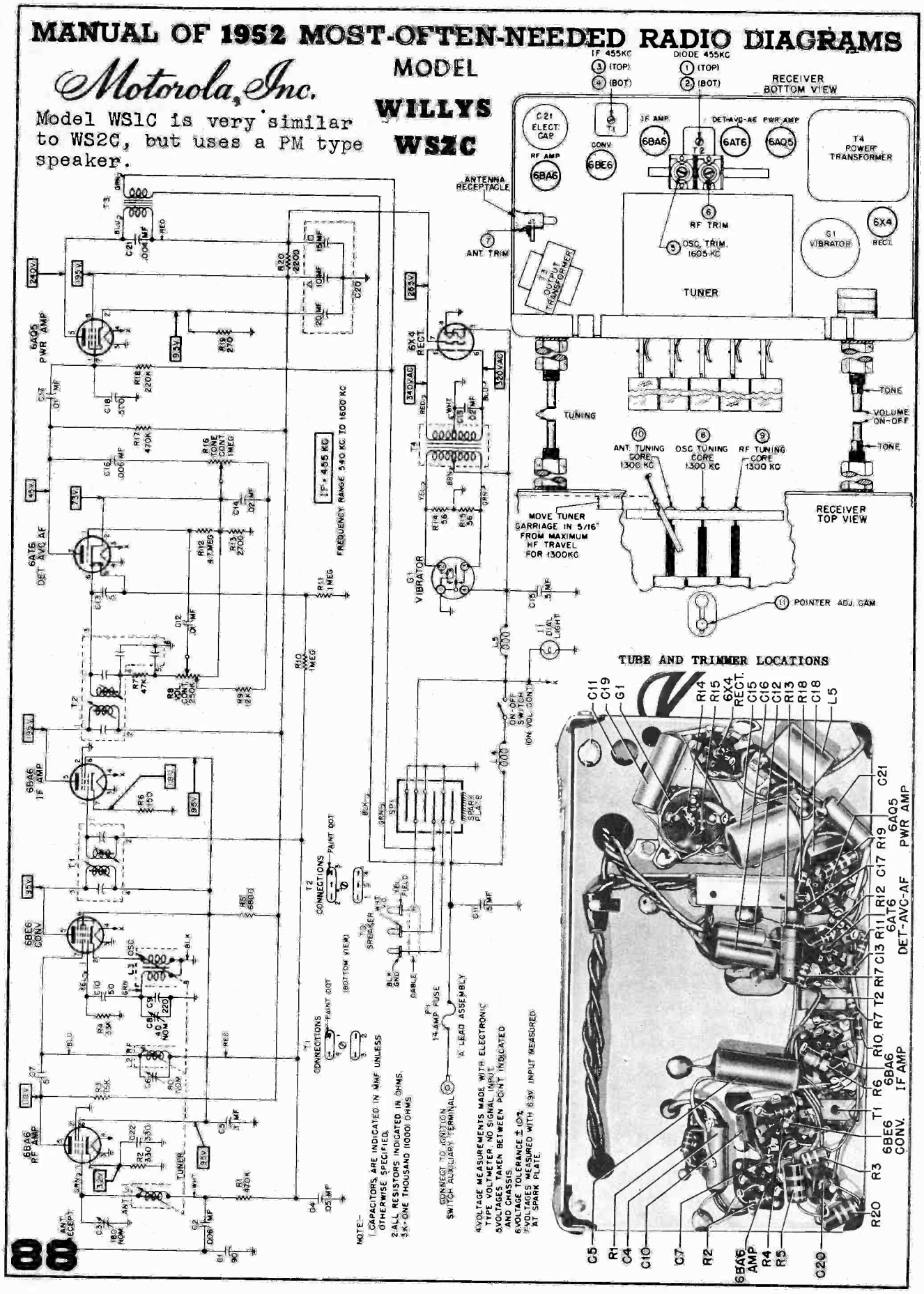

MODEL
MOTOROLA NH2AC
NASH AC-152

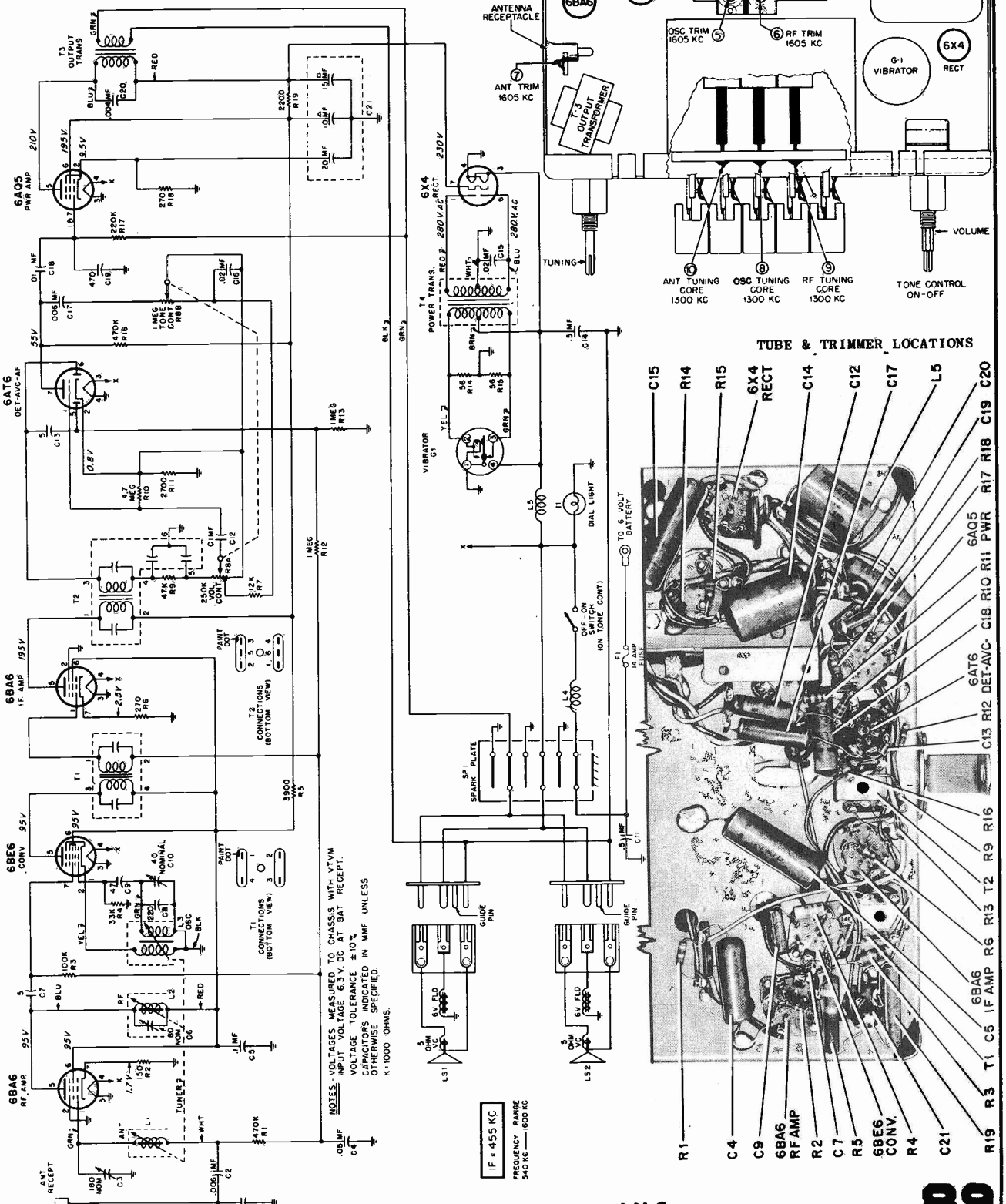

Motorola

MODEL

MOTOROLA 2MF

FORD

FAC-18805-A

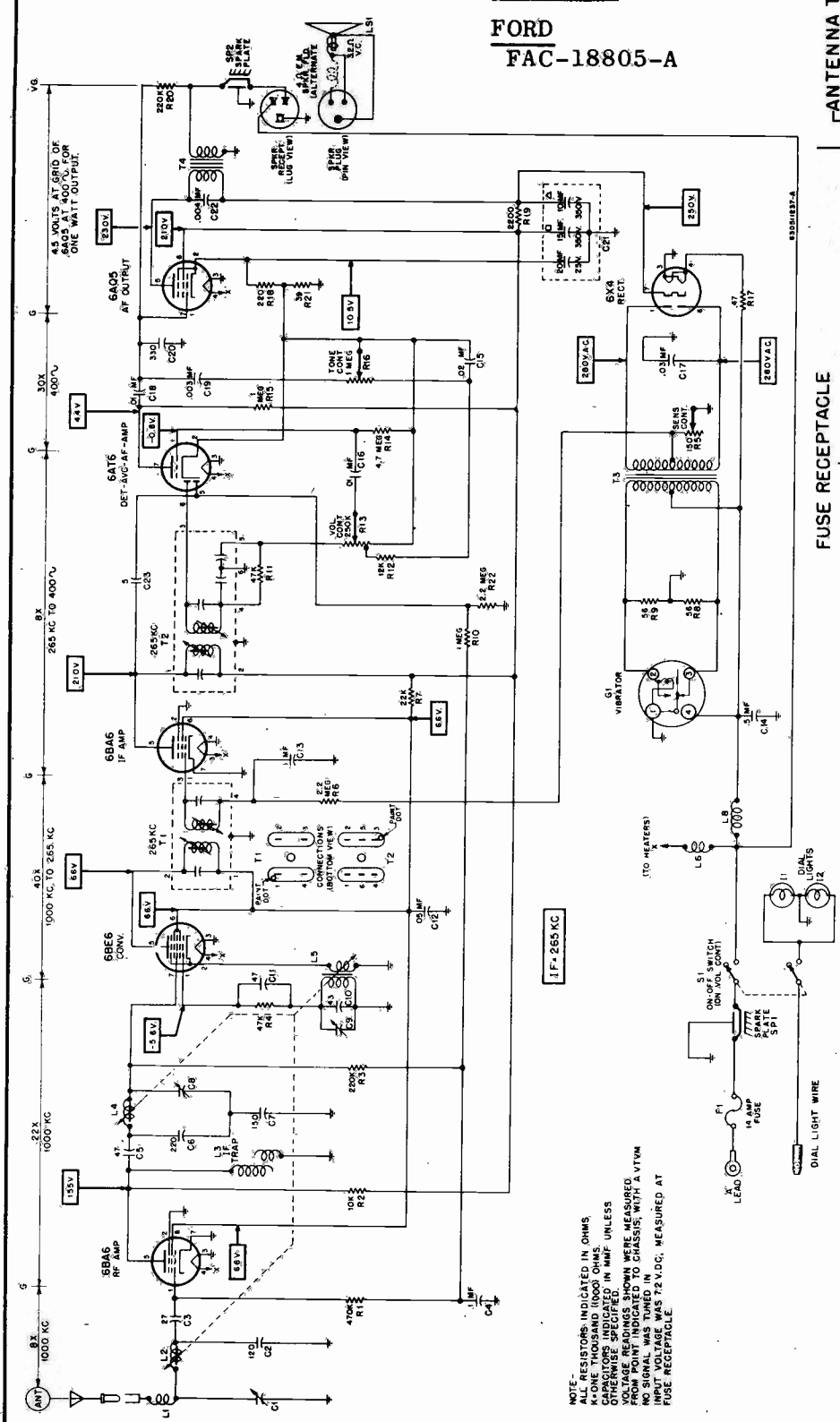

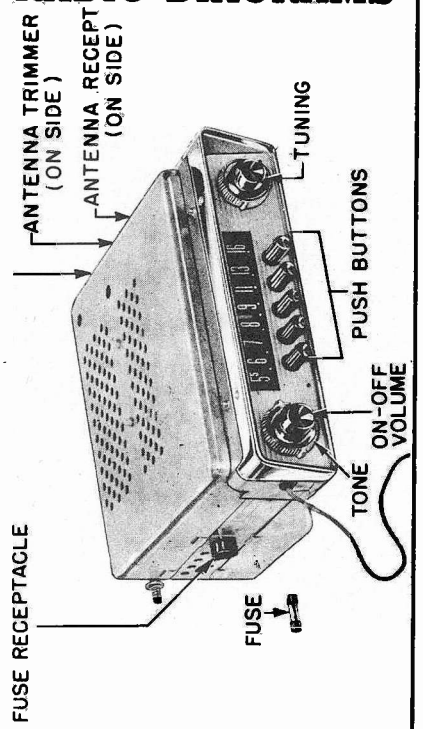

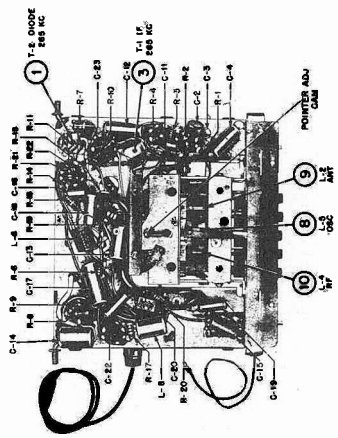

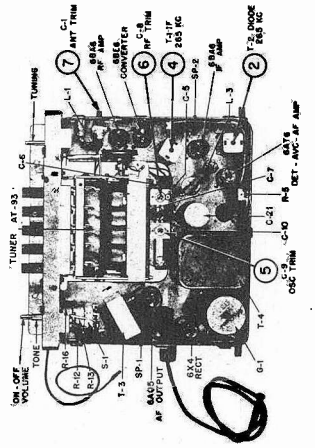

MANUAL OF 1952 MOST-OFTEN-NEEDED RADIO DIAGRAMS

MOTOROLA, INC. CHASSIS 2A

MODELS BK2A, CT2A, GMT2A, HJ2A, HN2A, KR2A, OE2A, PC2A, PD2A, & SR2A

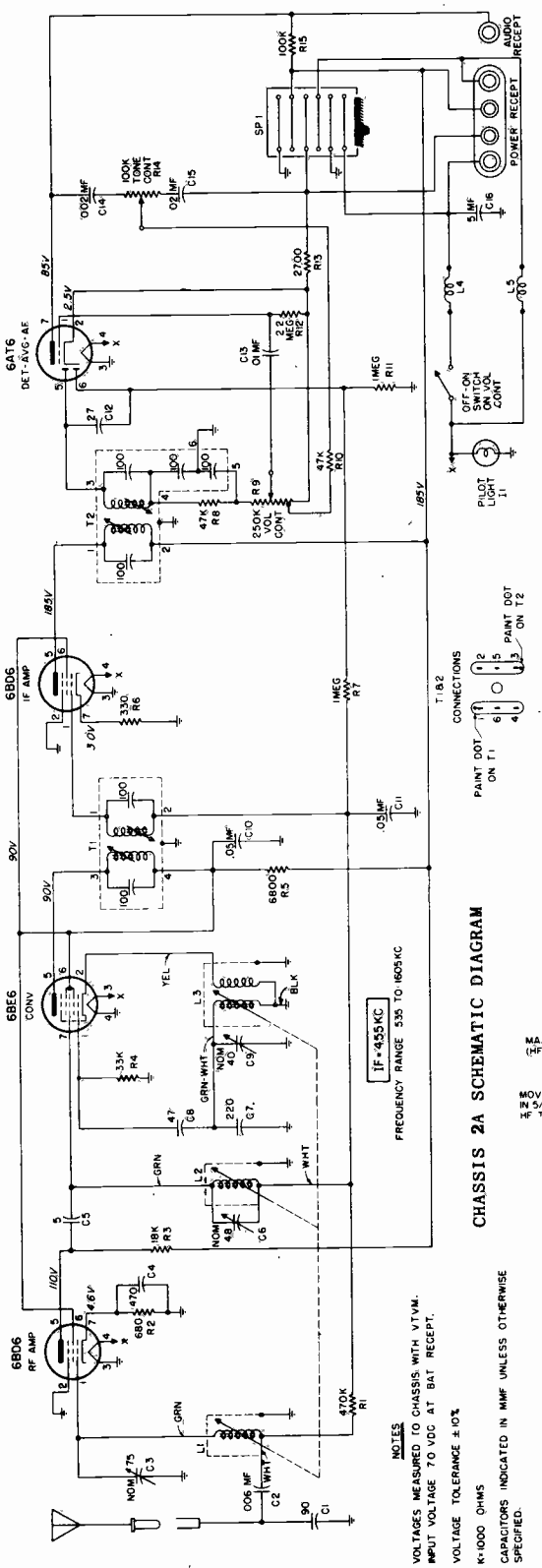

CHASSIS 2A SCHEMATIC DIAGRAM

TYPE - Chassis 2A is a four-tube automotive type tuner chassis with mechanical pushbuttons. It contains the RF Amp, Converter, IF Amp, Detector, and 1st AF Amplifier stages. Appropriate matched front plate assemblies (attached to the 2A chassis at the factory) make it into complete custom Tuner Units for the following cars:

Model BK2A For 1952, 1951, 1950, 1949, 1948, 1947, 1946 & 1942 Buick (except special prior to 1949)
Model CT2A For 1952 & 1951 Chevrolet
Model GMT2A For 1952, 1951, 1950, 1949 & 1948 General Motors & Chevrolet Truck
Model HJ2A For 1952 & 1951 Henry J
Model HN2A For 1952 & 1951 Hudson
Model KR2A For 1952 & 1951 Kaiser
Model OE2A For 1952 & 1951 Oldsmobile 88 Super
Model PC2A For 1952, 1951, 1950, 1949, 1948, 1947, 1946 Pontiac
Model PD2A For 1952 & 1951 Packard
Model SR2A For 1952, 1951 & 1950 Studebaker

The above Tuner Units must be used with a separate Audio & Power Unit (Motorola Models P6-2 or P8-2) to form a complete radio receiver.

PUSHBUTTON TUNER - Automatic Tuner AT-94

TUNING RANGE - 535 to 1610 Kc IF - 455 Kc

POWER INPUT - 6.8 amps at 7 vdc with P6-2 Audio & Power Unit, or
8.5 amps at 7 vdc with P8-2 Audio & Power Unit

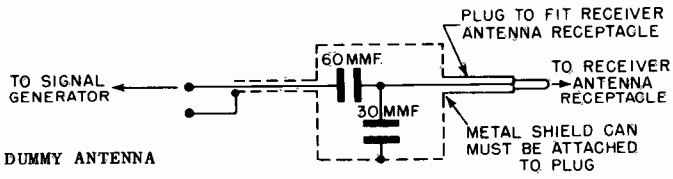

DUMMY ANTENNA

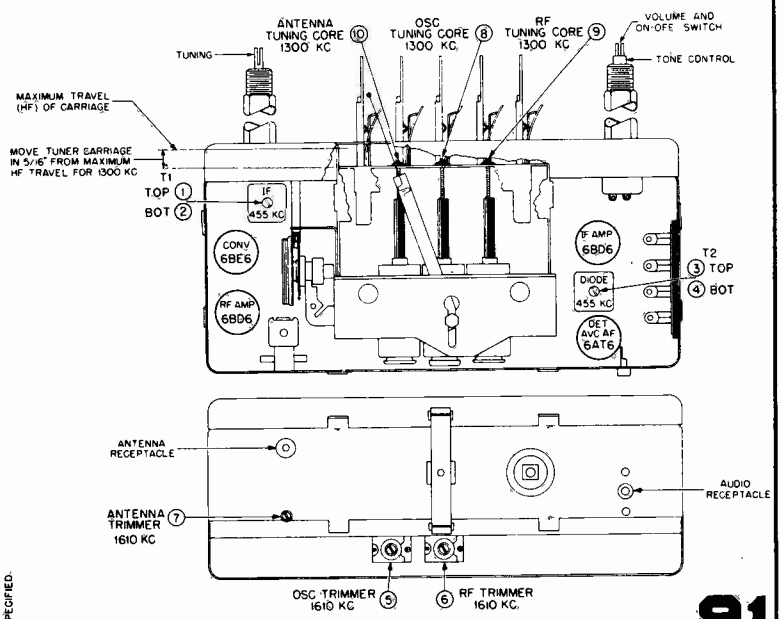

CHASSIS 2A TUBE AND TRIMMER LOCATIONS

MANUAL OF 1952 MOST-OFTEN-NEEDED RADIO DIAGRAMS

MOTOROLA, INC. CHASSIS 2M

MODELS BK2M, CT2M, GMT2M, HJ2M, HN2M, KR2M, OE2M, PC2M, PD2M, & SR2M

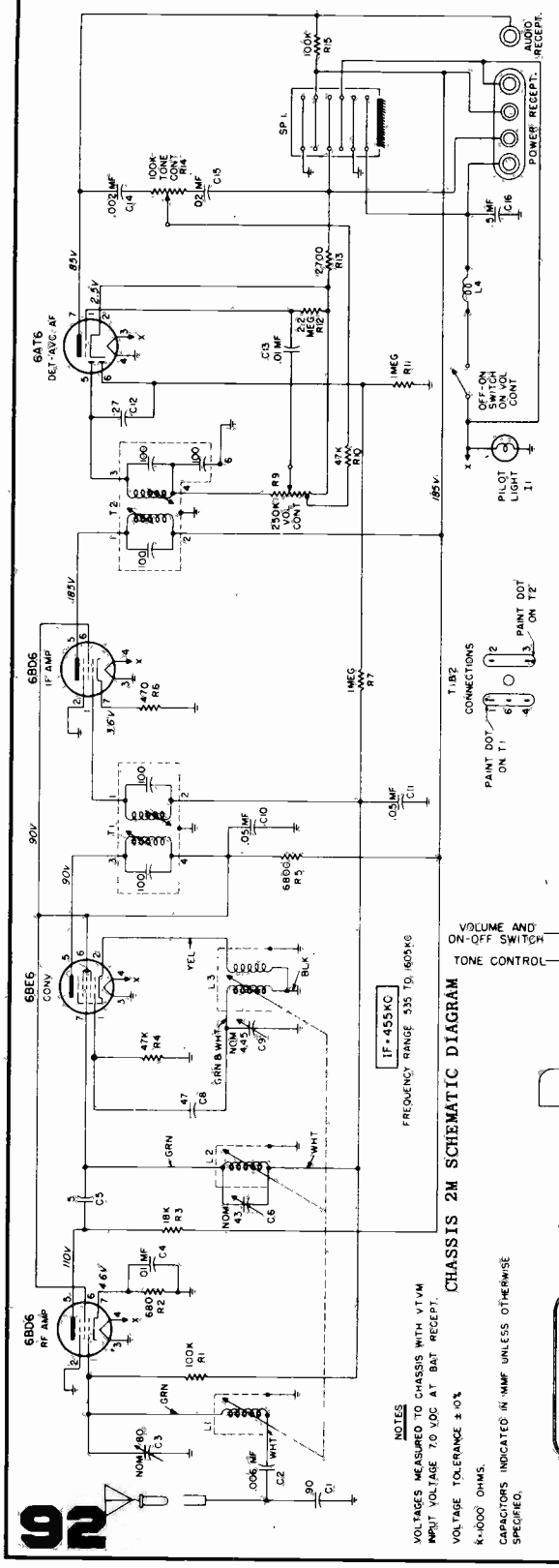

TYPE - Chassis 2M is a four-tube automotive type tuner chassis. It contains the RF Amp, Converter, IF Amp, Detector and 1st AF Amplifier stages. Appropriate matched front plate assemblies (attached to the 2M chassis at the factory) make it into complete custom Tuner Units for the following cars:

Model BK2M	For 1952, 1951, 1950, 1949, 1948, 1947, 1946 & 1942 Buick (except Special prior to 1949)
Model CT2M	For 1952 & 1951 Chevrolet
Model GMT2M	For 1952, 1951, 1950, 1949 & 1948 General Motors & Chevrolet Truck
Model HJ2M	For 1952 & 1951 Henry J
Model HN2M	For 1952 & 1951 Hudson
Model KR2M	For 1952 & 1951 Kaiser
Model OE2M	For 1952 & 1951 Oldsmobile 88 Super
Model PC2M	For 1952, 1951, 1950, 1949, 1948, 1947, 1946 Pontiac
Model PD2M	For 1952 & 1951 Packard
Model SR2M	For 1952, 1951 & 1950 Studebaker

The above Tuner Units must be used with a separate Audio & Power Unit (Motorola Models P6-2 or P8-2) to form a complete radio receiver.

ALIGNMENT

1. Remove receiver housing to expose all alignment adjustments.
2. Connect speaker leads (from Audio & Power Unit) to speaker.
3. Connect an output meter across the speaker voice coil.
4. Connect a 6 volt storage battery to the "A" lead on the Audio & Power Unit.
5. Turn the receiver "on" and allow it to warm up for a few minutes. Set volume control at maximum and tone control to "high" position.
6. For greatest accuracy, keep output of receiver at approximately 1 watt (1 watt = 1.79 volts on output meter) throughout alignment by reducing signal generator output (not receiver volume control) as stages are brought into alignment.

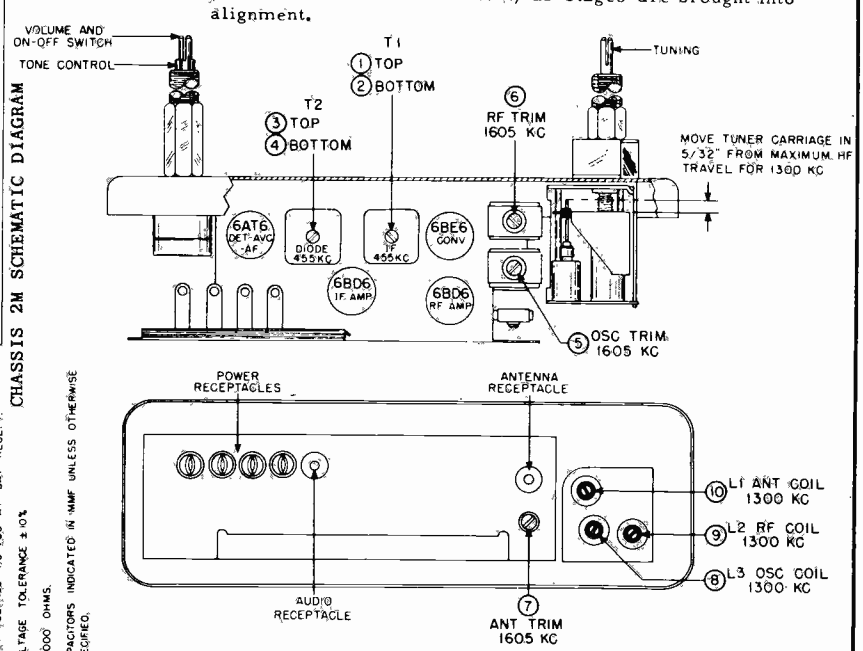

CHASSIS 2M TUBE AND TRIMMER LOCATIONS

MOTOROLA, INC. MODEL BT-2

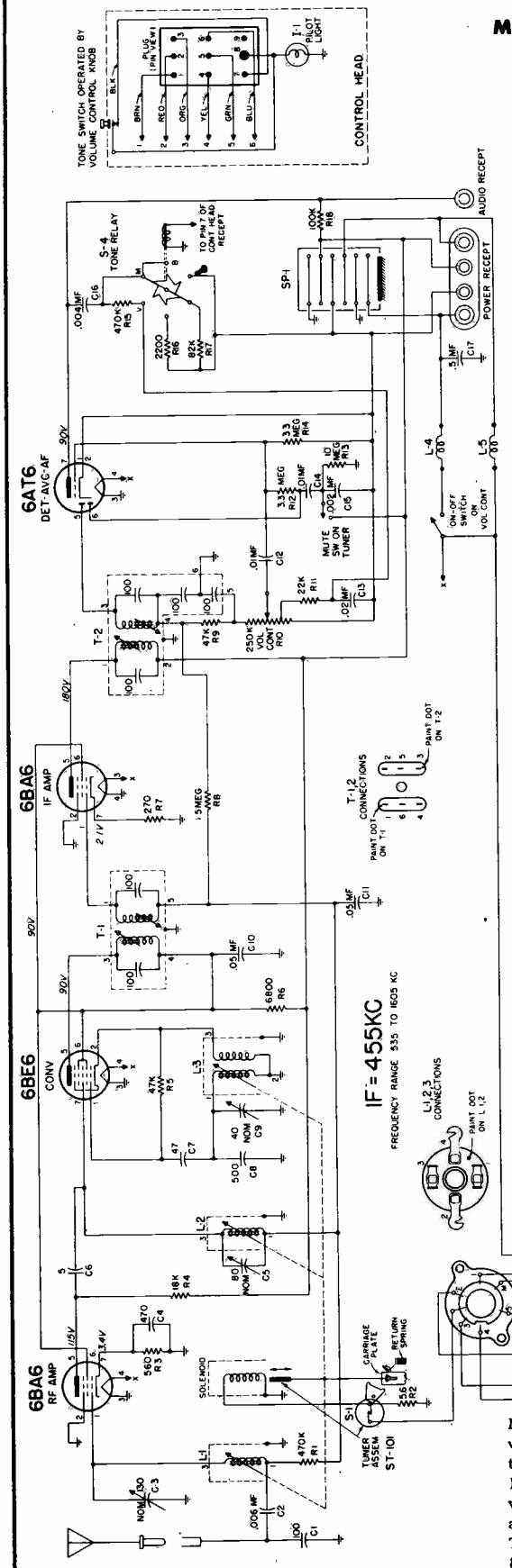

MODEL BT-2 SCHEMATIC DIAGRAM

VOLTAGE READINGS SHOWN WERE MEASURED FROM POINT INDICATED TO CHASSIS, USING A VACUUM TUBE VOLTMETER VOLTAGE TOLERANCE ±10%. INPUT VOLTAGE WAS 7.0 VDC. @ BATTERY RECEPTACLE.
ALL RESISTORS INDICATED IN OHMS K=ONE THOUSAND (1000) OHMS.
CAPACITORS INDICATED IN MICROMICROFARADS UNLESS OTHERWISE SPECIFIED.

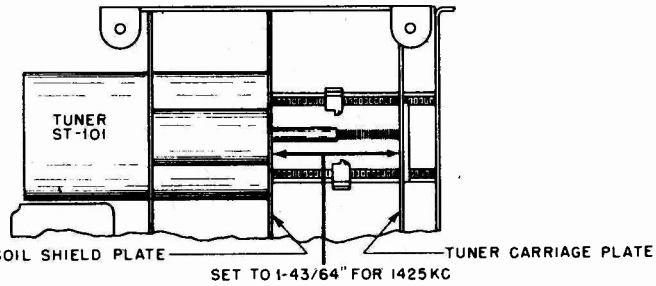

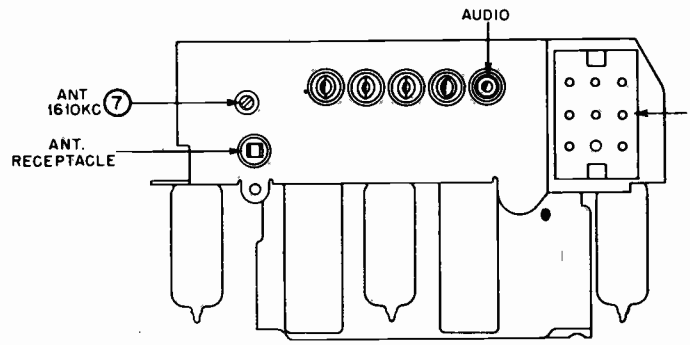

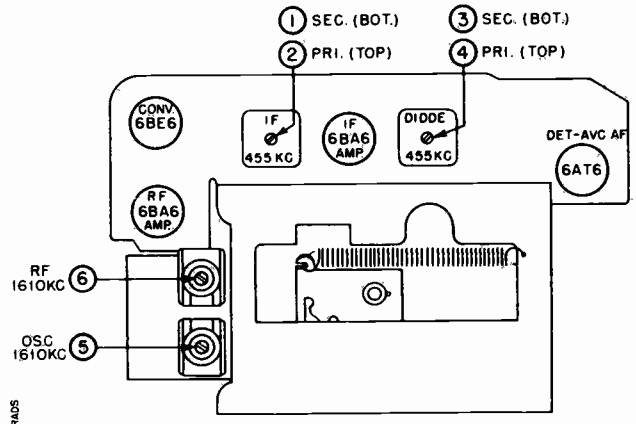

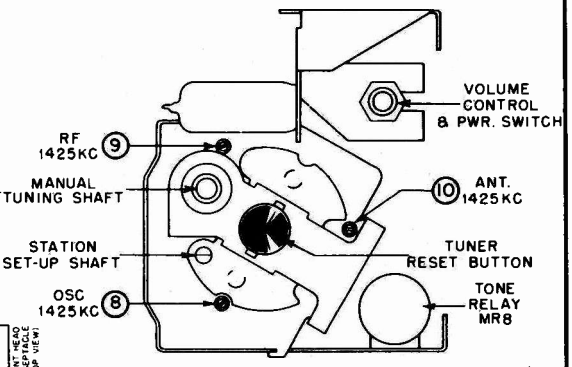

MODEL BT-2 TUBE & TRIMMER LOCATIONS

Model BT-2 is a four-tube automotive type tuner with electrically operated pushbuttons. It contains the RF Amp, Converter, IF Amp, Detector, and 1st AF Amplifier stages. This Tuner Unit is universal and can be installed in any car by using the appropriate Motorola control head and speaker kit. The Tuner Unit must be used with a separate Audio & Power Unit (Motorola Models P6-2 or P8-2).

MANUAL OF 1952 MOST-OFTEN-NEEDED RADIO DIAGRAMS

MOTOROLA, INC. MODEL P6-2, P8-2, 702, & 802

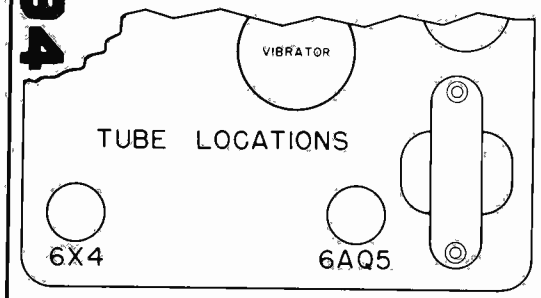

Model P6-2 is a two-tube Audio & Power Unit designed to be used with Tuner Units described in this manual.

Model 702 is a compact two-piece automotive superheterodyne receiver designed for installation in any car by using with appropriate Motorola control head and speaker kit. It consists of a Model BT-2 Tuner Unit and a Model P6-2 Audio & Power Unit.

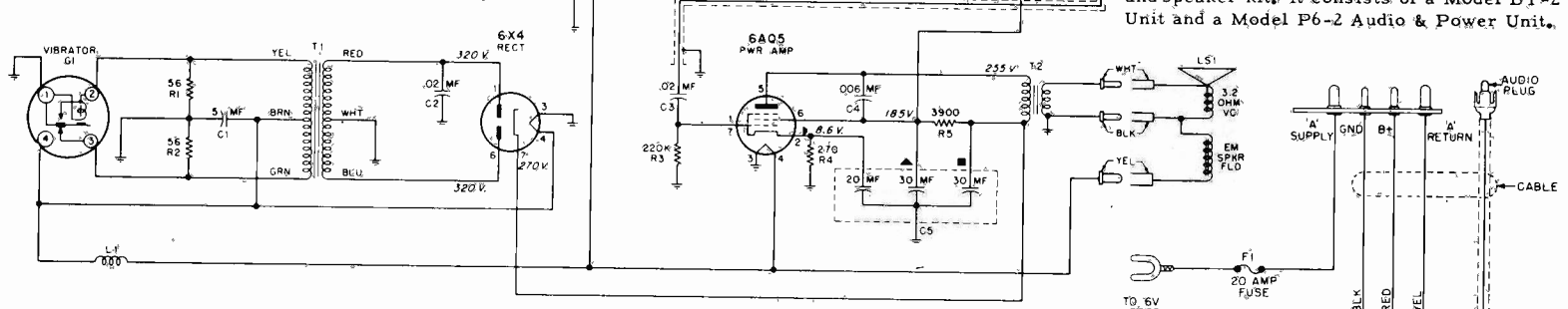

MODEL P6-2 SCHEMATIC DIAGRAM

Model 802 is a compact two-piece automotive superheterodyne receiver designed for installation in any car by using with appropriate Motorola control head and speaker kit. It consists of a Model BT-2 Tuner Unit and a Model P8-2 Audio & Power Unit.

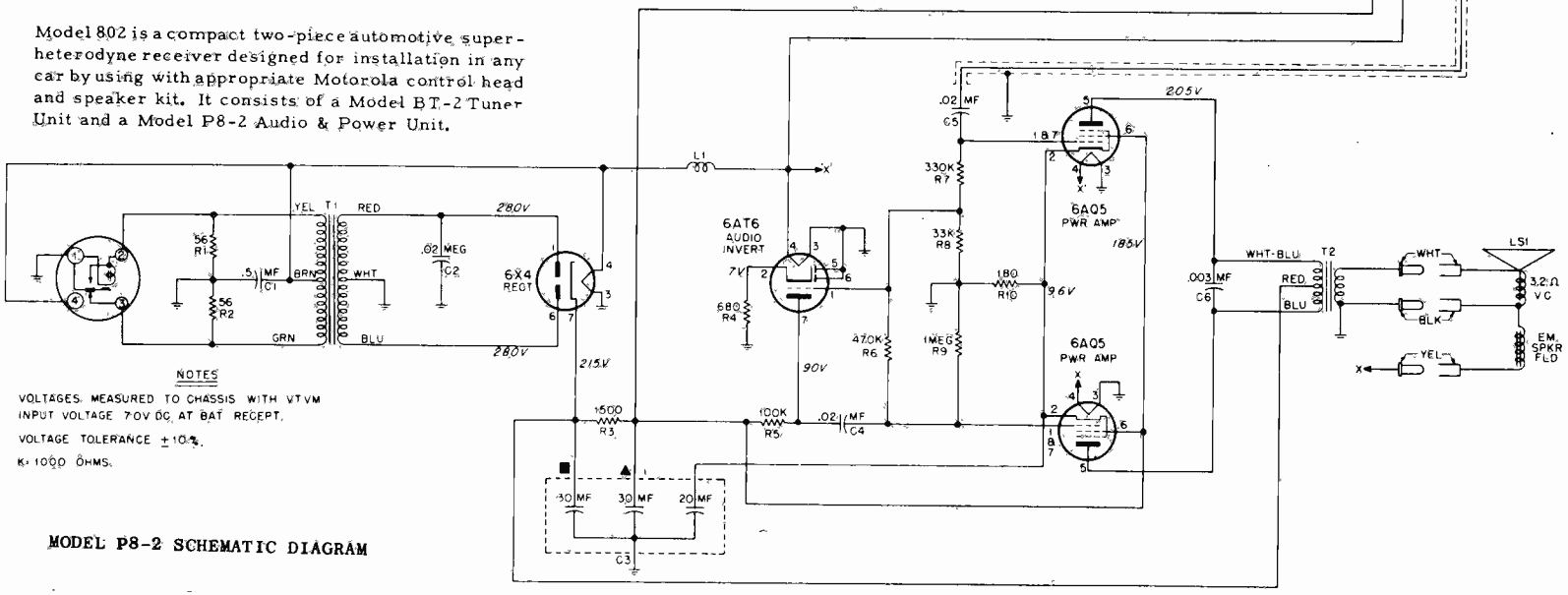

MODEL P8-2 SCHEMATIC DIAGRAM

MANUAL OF 1952 MOST-OFTEN-NEEDED RADIO DIAGRAMS

PHILCO RADIO MODELS 52-540, 52-540-I, 52-541, 52-541-I, AND 52-542-I

See next page, over, for alignment and further service data.

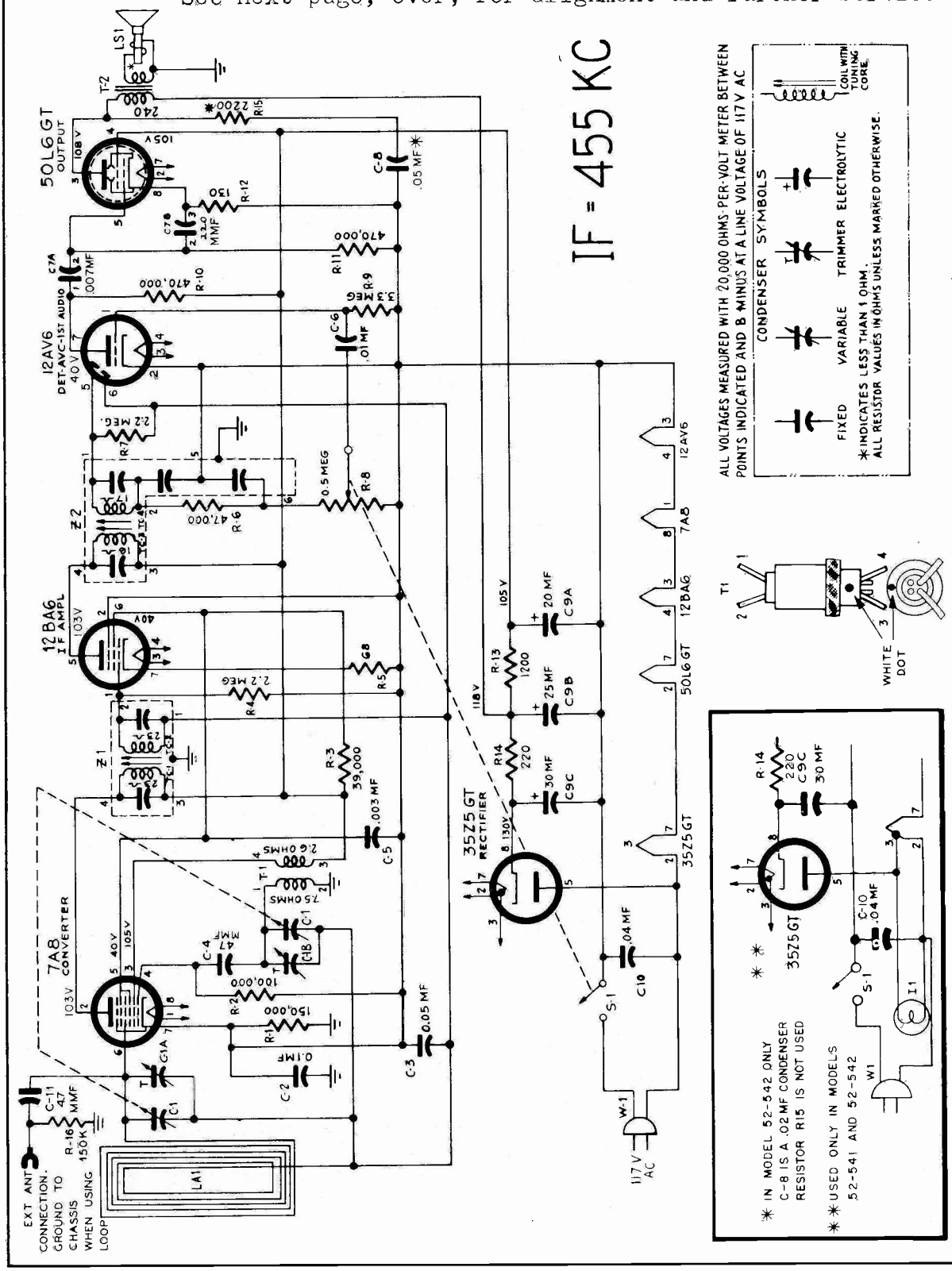

The material on Philco sets in this manual is reprinted through the courtesy of Philco Corp.

Philco Models 52-540, 52-540-I, 52-541, 52-541-I and 52-542-I (Continued)

ALIGNMENT PROCEDURE

CONTROLS: Turn on radio and set volume control to maximum.

DIAL POINTER: Turn tuning condenser to full-mesh position. Set dial pointer to index mark, located to left of "55."

OUTPUT METER: Connect across voice-coil terminals.

SIGNAL GENERATOR: Connect as indicated in chart. Use modulated output.

OUTPUT LEVEL: During alignment, attenuate signal-generator output to maintain output-meter indication below 1.25 volts.

STEP	SIGNAL GENERATOR		RADIO		ADJUST
	CONNECTION TO RADIO	DIAL SETTING	DIAL SETTING	SPECIAL INSTRUCTIONS	
1	Ground lead to B—; output lead through .1-uf. condenser to pin 6 of 7A8 converter.	455 kc.	540 kc. (gang fully meshed)	Adjust tuning cores, in order given, for maximum output.	TC4—2nd i-f sec. TC3—2nd i-f pri. TC2—1st i-f sec. TC1—1st i-f pri.
2	Radiating loop; see note below.	1600 kc.	1600 kc.	Adjust trimmer for maximum output.	C1B—osc.
3	Same as step 2.	1500 kc.	1500 kc.	Adjust trimmer for maximum output.	C1A—aerial

RADIATING LOOP: Make up a 6—8 turn, 6-inch-diameter loop from insulated wire; connect to signal-generator leads and place near radio loop antenna.

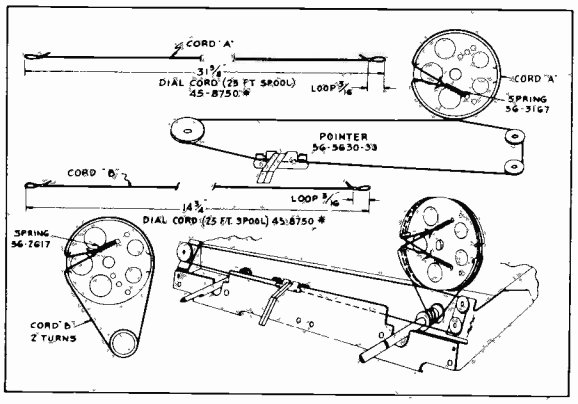

Drive-Cord Installation Details, Model 52-542-I

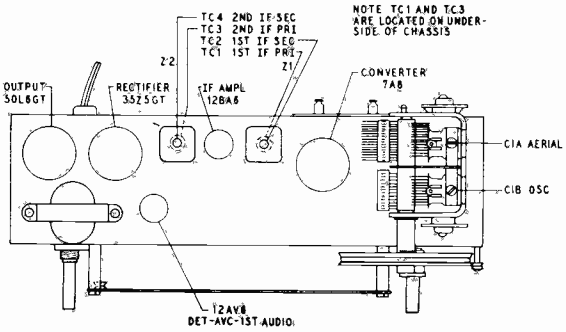

Top View, Showing Trimmer Locations

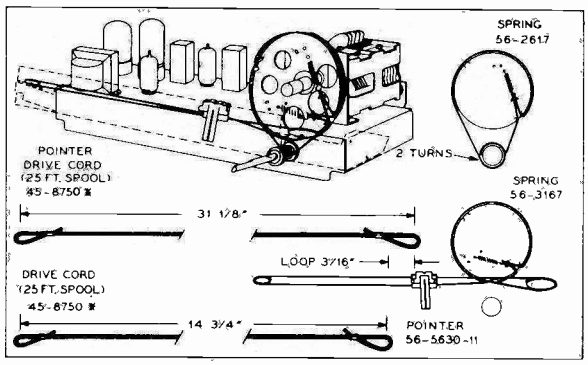

Drive-Cord Installation Details, 52-541 and 52-541-I

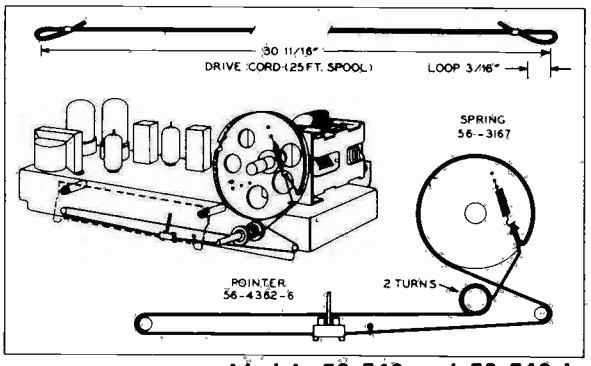

Models 52-540 and 52-540-I

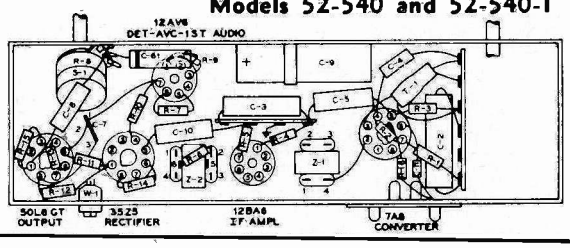

Circuit on previous page.

MANUAL OF 1952 MOST-OFTEN-NEEDED RADIO DIAGRAMS

PHILCO RADIO-CLOCK MODELS 52-544, 52-544-I AND 52-544-W

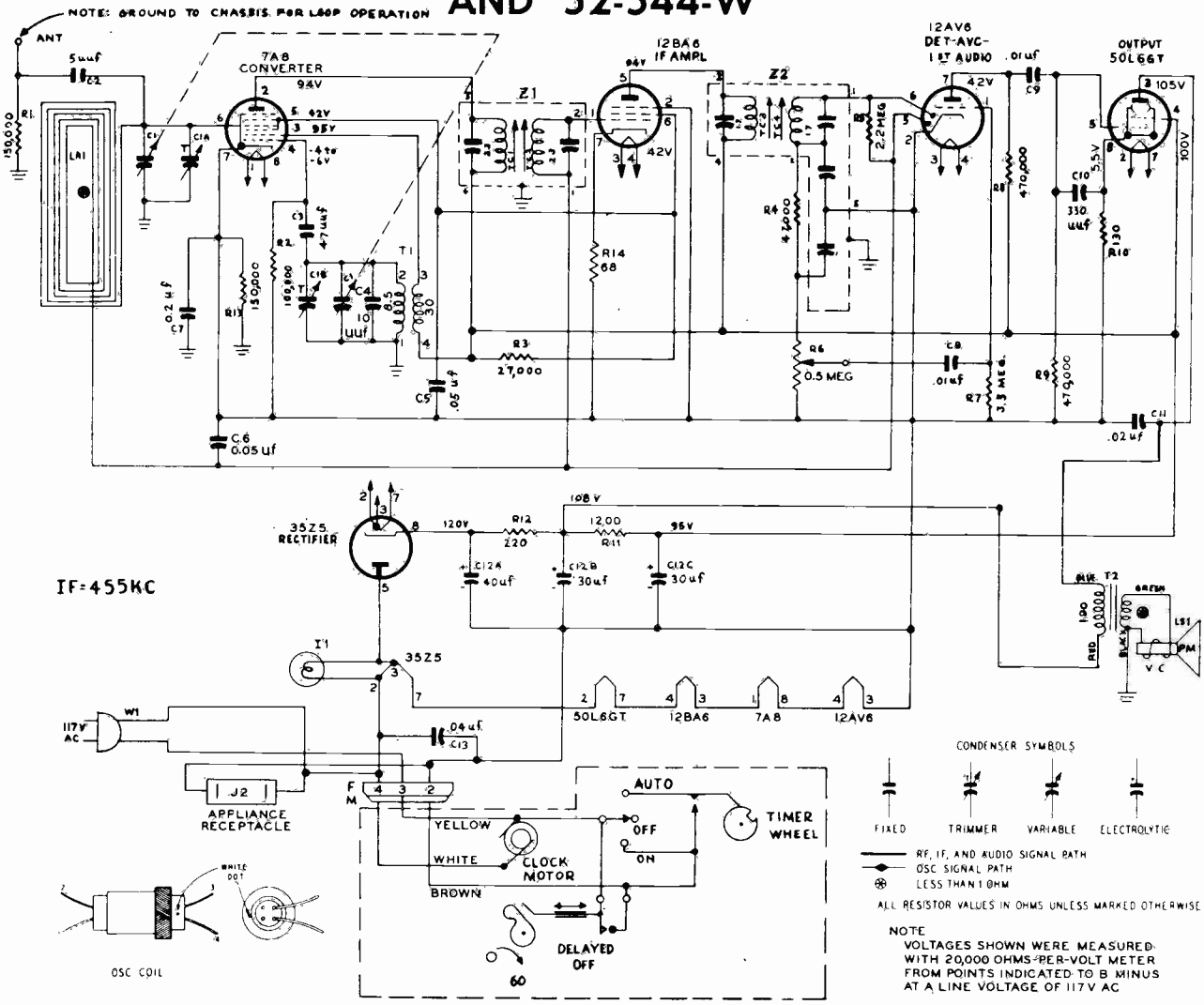

ALIGNMENT

STEP	SIGNAL GENERATOR		RADIO		ADJUST
	CONNECTION TO RADIO	DIAL SETTING	DIAL SETTING	SPECIAL INSTRUCTIONS	
1	Connect ground lead to B—; output lead through .1-µf. condenser to grid (pin 6) of 7A8.	455 kc.	Tuning condenser fully meshed.	Adjust tuning cores, in order given, for maximum output.	TC4—2nd i-f sec. TC3—2nd i-f pri. TC2—1st i-f sec.
2	Radiating loop (see note below).	1600 kc.	1600 kc.	Adjust trimmer for maximum output.	C1B—Osc.
3	Same as step 2.	1500 kc.	1500 kc.	Adjust trimmer for maximum output.	C1A—Aerial

RADIATING LOOP: Make up a 6—8 turn, 6-inch-diameter loop, from insulated wire; connect to signal-generator leads and place near radio loop aerial.

MANUAL OF 1952 MOST-OFTEN-NEEDED RADIO DIAGRAMS

PHILCO RADIO-CLOCK MODELS 52-543, 52-545, 52-547, AND 52-550

Models 52-543, 52-545, 52-547, and 52-550 are electrically similar to Model 52-544, but they are housed in different style cabinets, and incorporate certain circuit refinements over Model 52-544.

The following diagrams and the Service Information are for Models 52-543, 52-545, 52-547, and 52-550 only.

See page 97 for material on Philco Model 52-544.

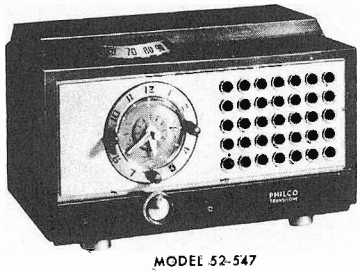

MODEL 52-547

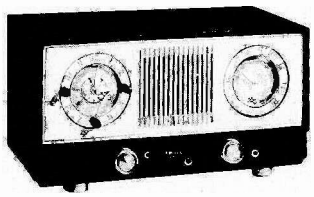

MODEL 52-550

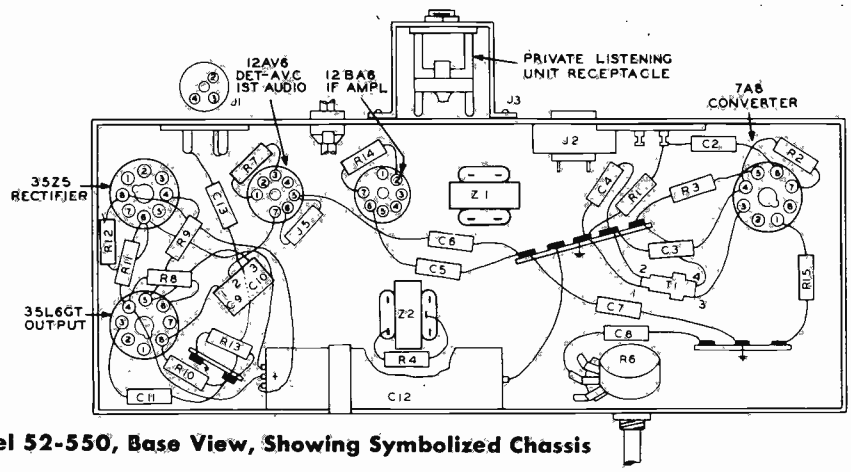

Model 52-550, Base View, Showing Symbolized Chassis

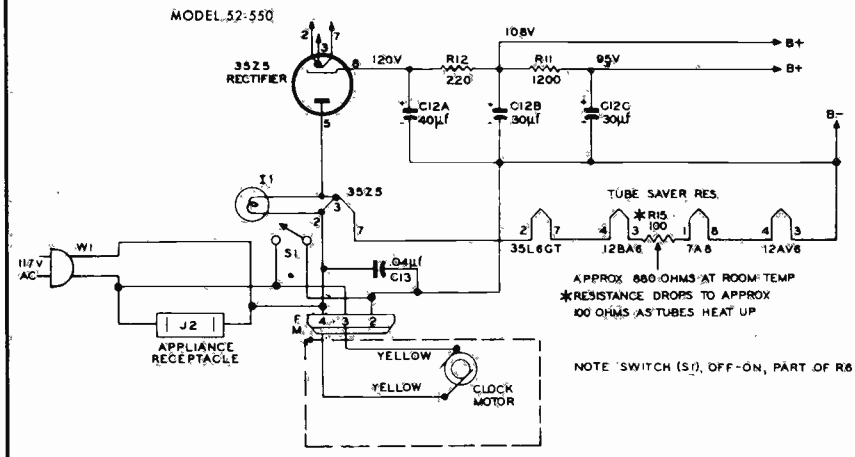

Model 52-543, Power and Clock Circuits

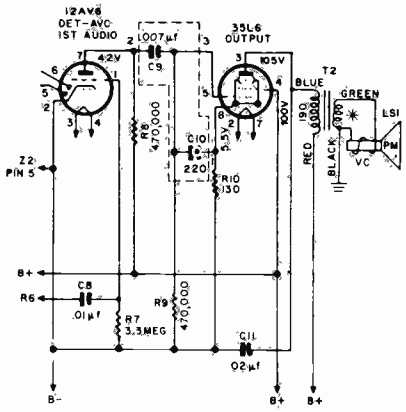

Models 52-543, 52-545,-and 52-547, Output Circuit

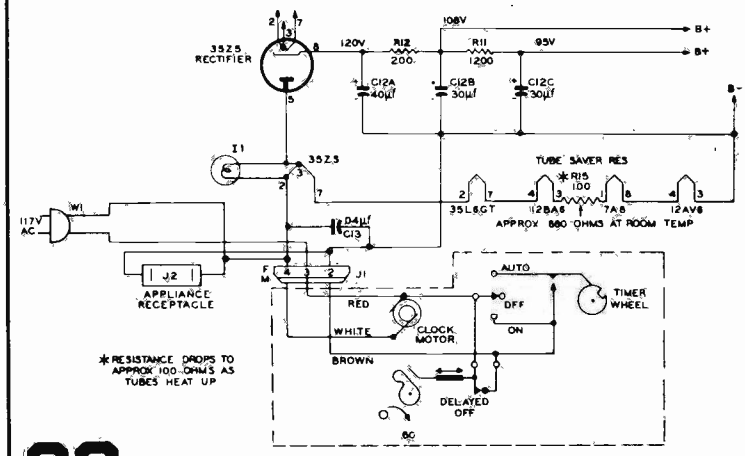

52-545, 52-547, and 52-550, Power and Clock Circuits

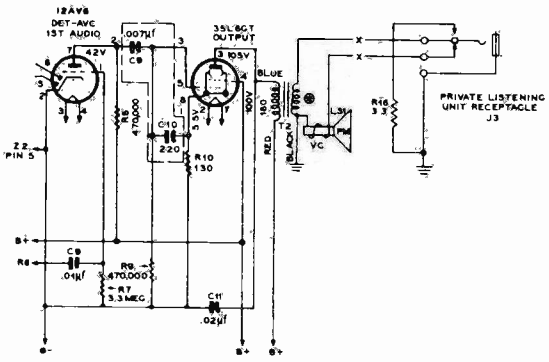

Model 52-550, Output Circuit

MANUAL OF 1952 MOST-OFTEN-NEEDED RADIO DIAGRAMS

PHILCO RADIO MODEL 52-548

FREQUENCY RANGE ..... 540—1620 kc.

AUDIO OUTPUT ..... 1 watt

OPERATING VOLTAGE ..... 105—120 volts, a.c. or d.c.

POWER CONSUMPTION ..... 30 watts

INTERMEDIATE FREQUENCY . 455 kc.

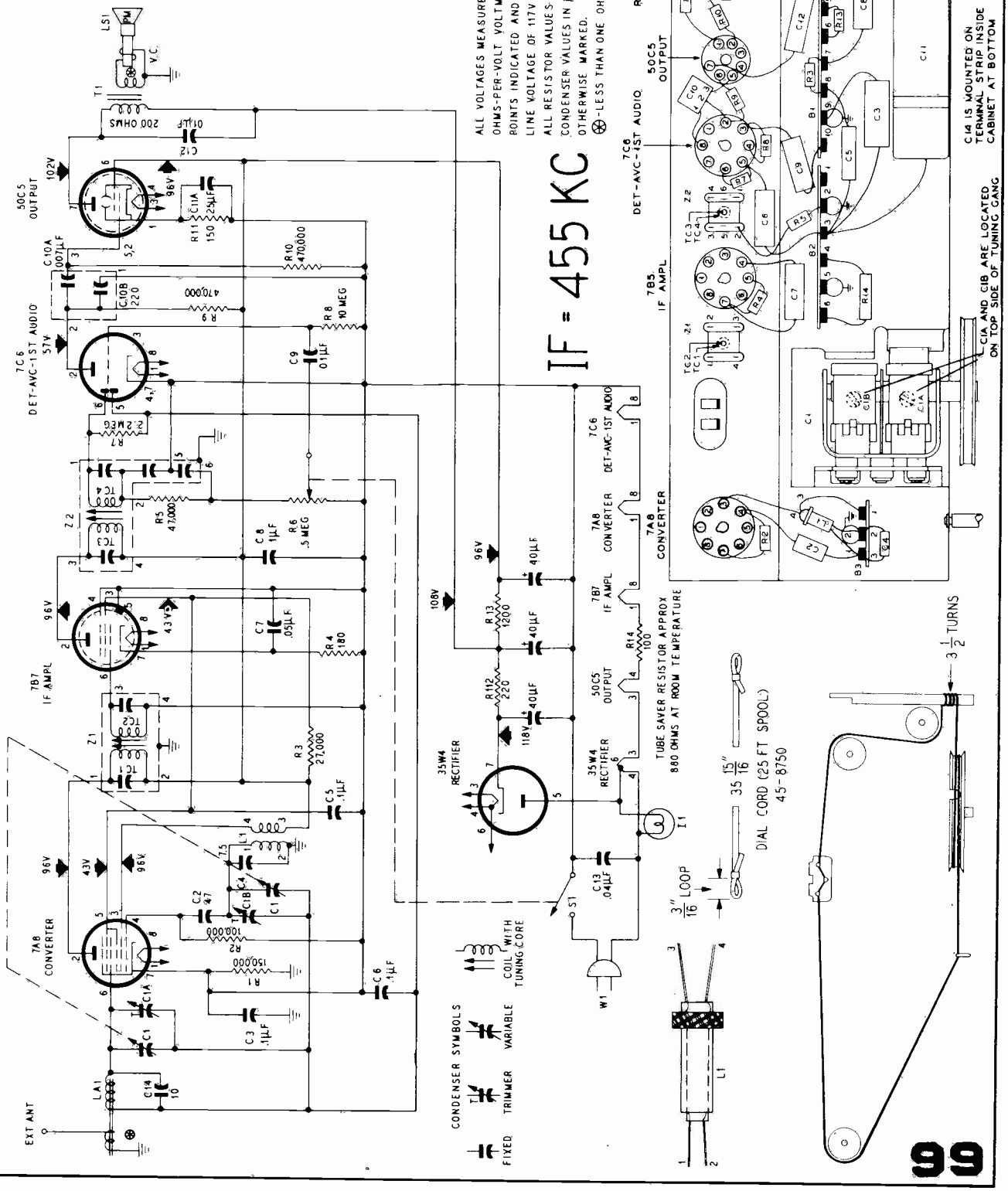

MANUAL OF 1952 MOST-OFTEN-NEEDED RADIO DIAGRAMS

PHILCO RADIO MODELS 52-640 AND 52-641

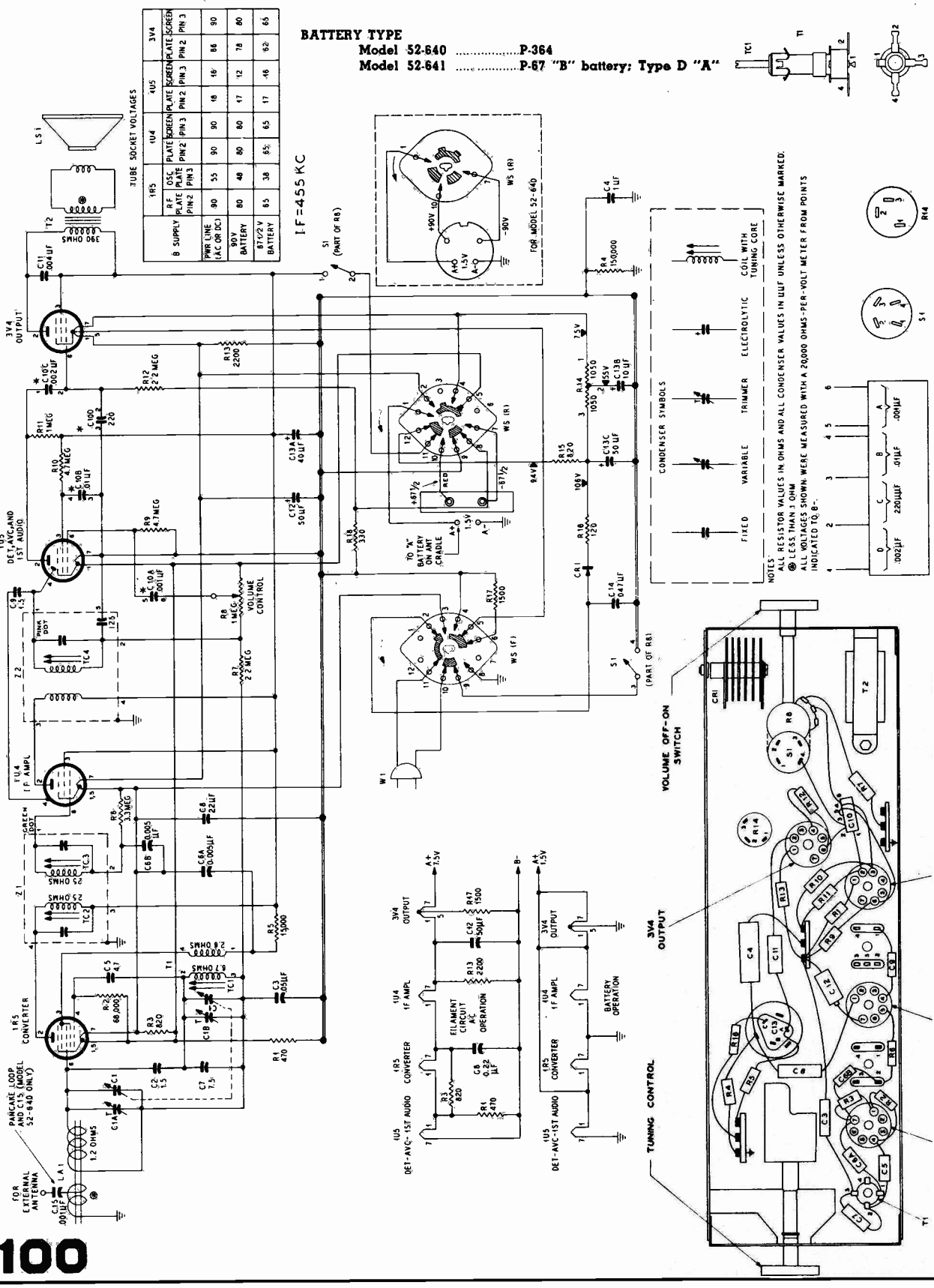

MANUAL OF 1952 MOST-OFTEN-NEEDED RADIO DIAGRAMS

PHILCO RADIO MODEL 52-643

FREQUENCY RANGE ..... 540—1620 kc.

AUDIO OUTPUT ..... 160 milliwatts

OPERATING VOLTAGES ..... 117 volts, a.c. or d.c.; or 9-volt "A" battery and 90-volt "B" battery

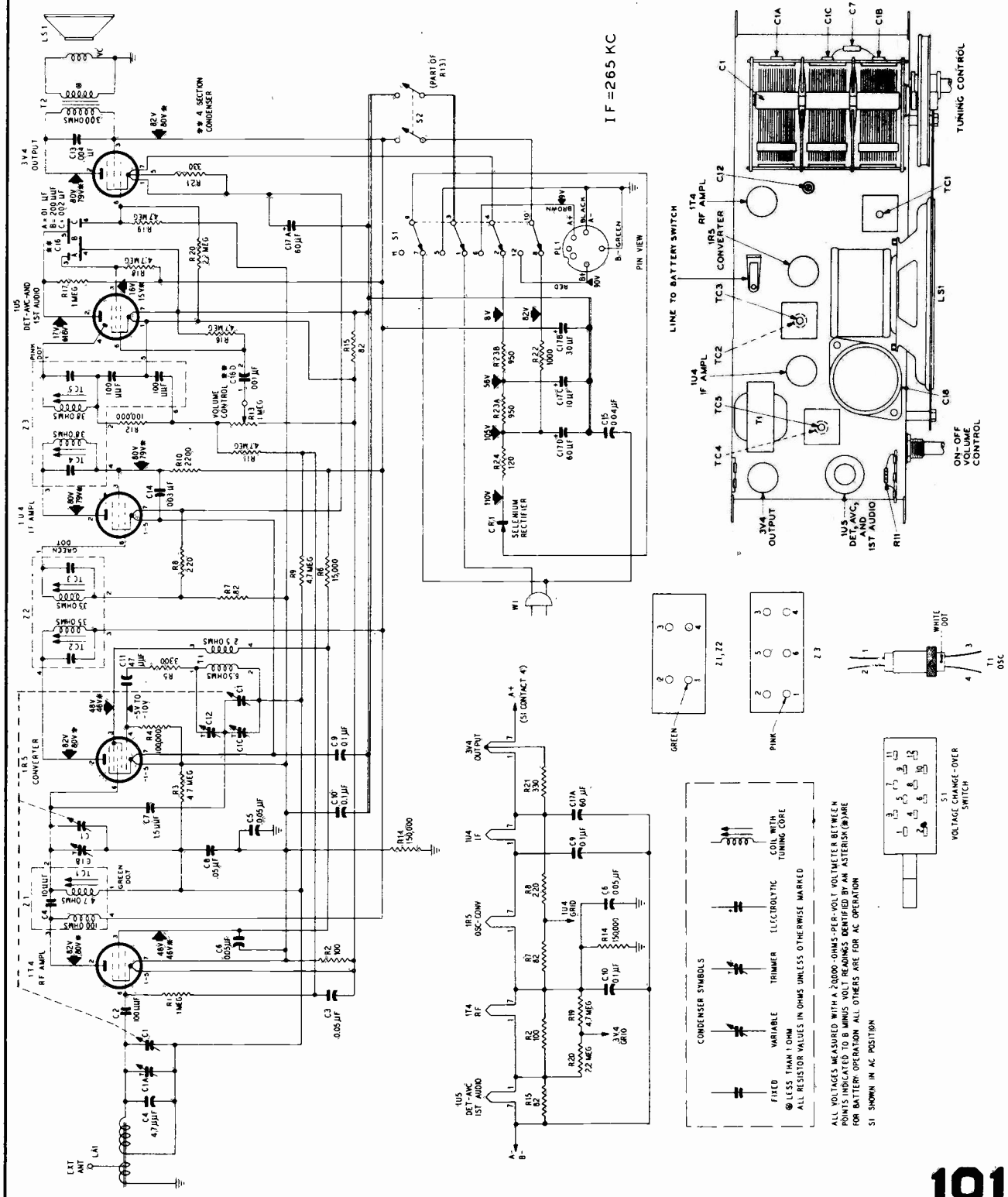

MANUAL OF 1952 MOST-OFTEN-NEEDED RADIO DIAGRAMS

PHILCO RADIO MODELS 52-940, 52-941 AND 52-942

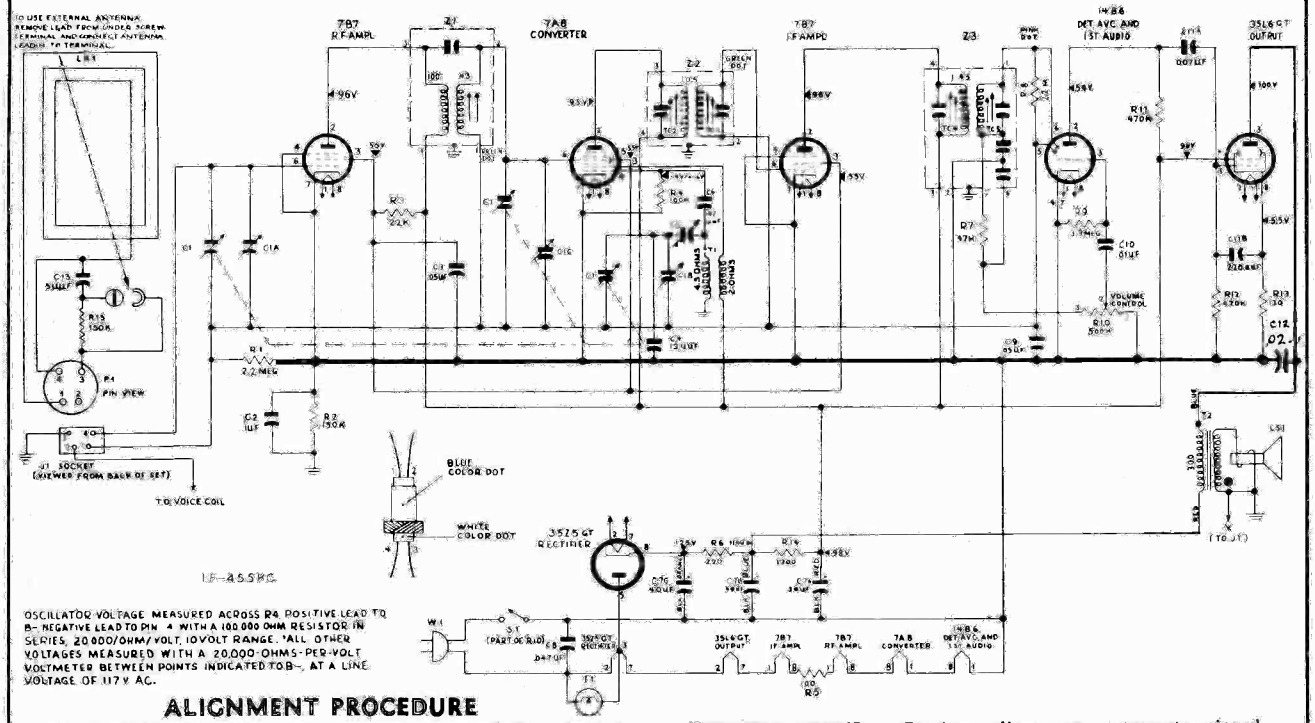

ALIGNMENT PROCEDURE

DIAL POINTER: Turn tuning condenser to full-mesh position. Adjust pointer so that center of pointer carriage coincides with the first scribe line from the left.

OUTPUT METER: Connect across speaker voice coil.

SIGNAL GENERATOR: Connect as indicated in chart. Use modulated output.

OUTPUT LEVEL: During alignment, attenuate signal-generator output to maintain an output-meter indication of 1.25 volts.

VOLUME CONTROL: Set to maximum.

CRITICAL DRESS: The green lead from the osc. section of C1 to C5 must be dressed away from the chassis, with all excess under the chassis.

STEP	SIGNAL GENERATOR		RADIO		ADJUST
	CONNECTION TO RADIO	DIAL SETTING	DIAL SETTING	SPECIAL INSTRUCTIONS	
1	Through a .1-µf. condenser to stator of r-f section of gang. Ground lead to B-	455 kc.	Gang fully meshed	Adjust, in order given, for maximum output.	TC5—2nd i-f sec. TC4—2nd i-f pri. TC3—1st i-f sec. TC2—1st i-f pri.
2	Radiating loop.			Preset ½ turn from right.	C5—osc. series
3	Same as step 2.	1620 kc.	1620 kc.	Adjust for maximum.	C1B—osc. shunt
4	Same as step 2.	1500 kc.	1500 kc.	Adjust for maximum.	C1C—r-f C1A—aerial
5	Same as step 2.	580 kc.	580 kc.	Adjust for maximum while rocking tuning control.	C5—osc. series TC1—r-f core
6	Repeat steps 3 and 4.				

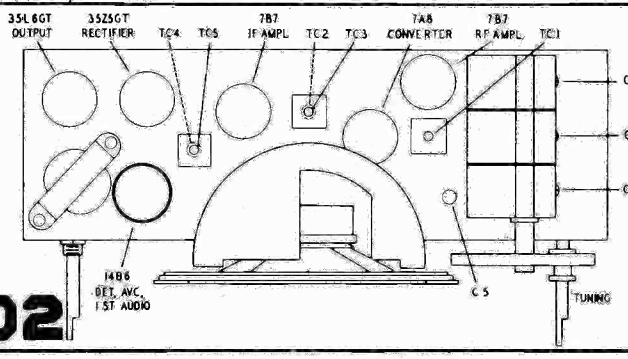

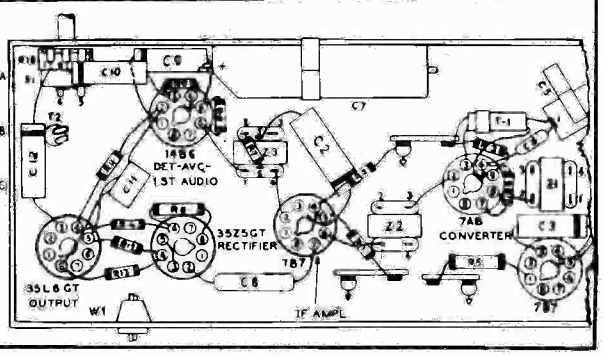

MANUAL OF 1952 MOST-OFTEN-NEEDED RADIO DIAGRAMS

PHILCO RADIO MODEL 52-944

FREQUENCY RANGES

Broadcast .....540-1620 kc.

FM .....88—108 mc.

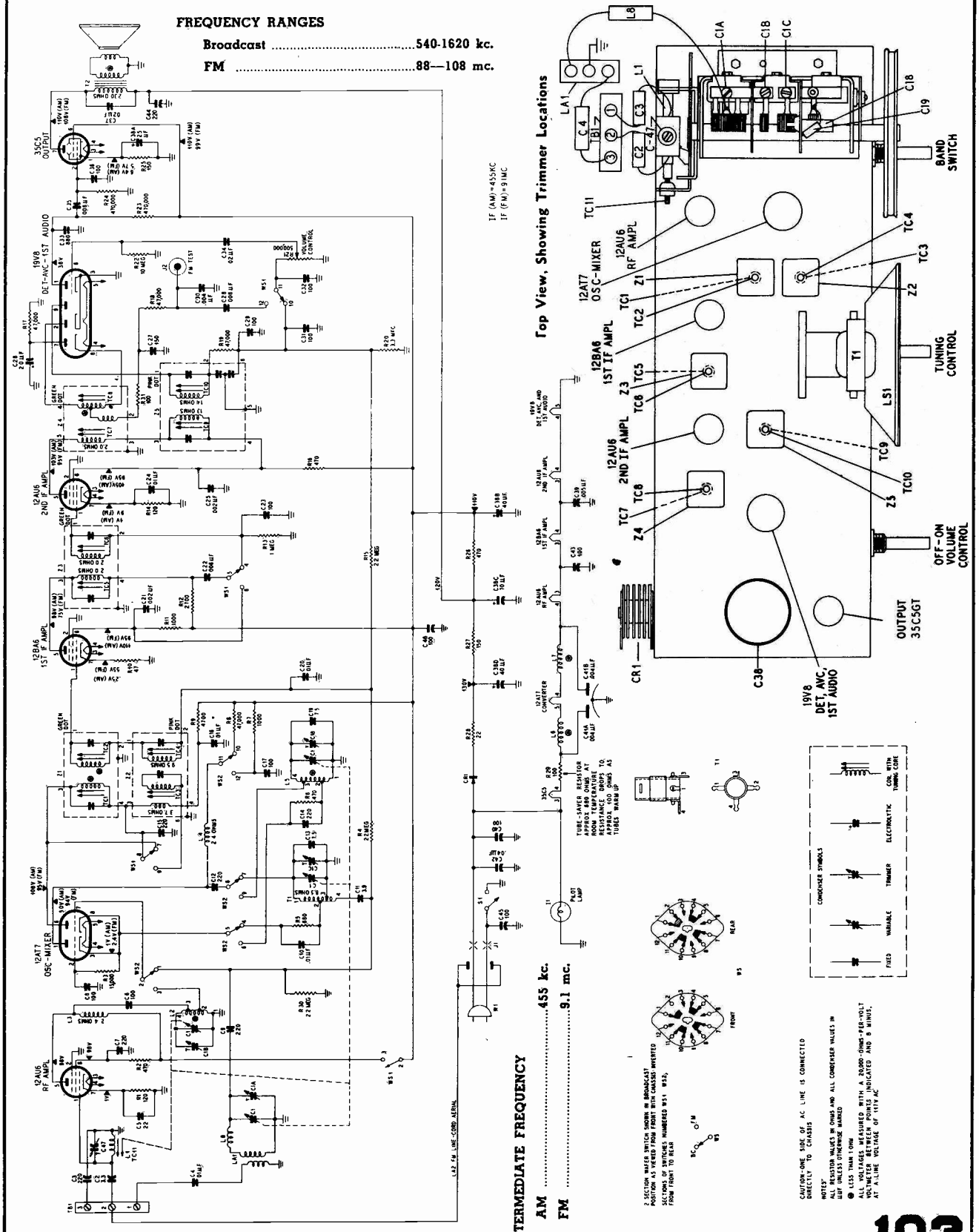

MANUAL OF 1952 MOST-OFTEN-NEEDED RADIO DIAGRAMS

PHILCO MODEL 52-1340, CODES 121 AND 122

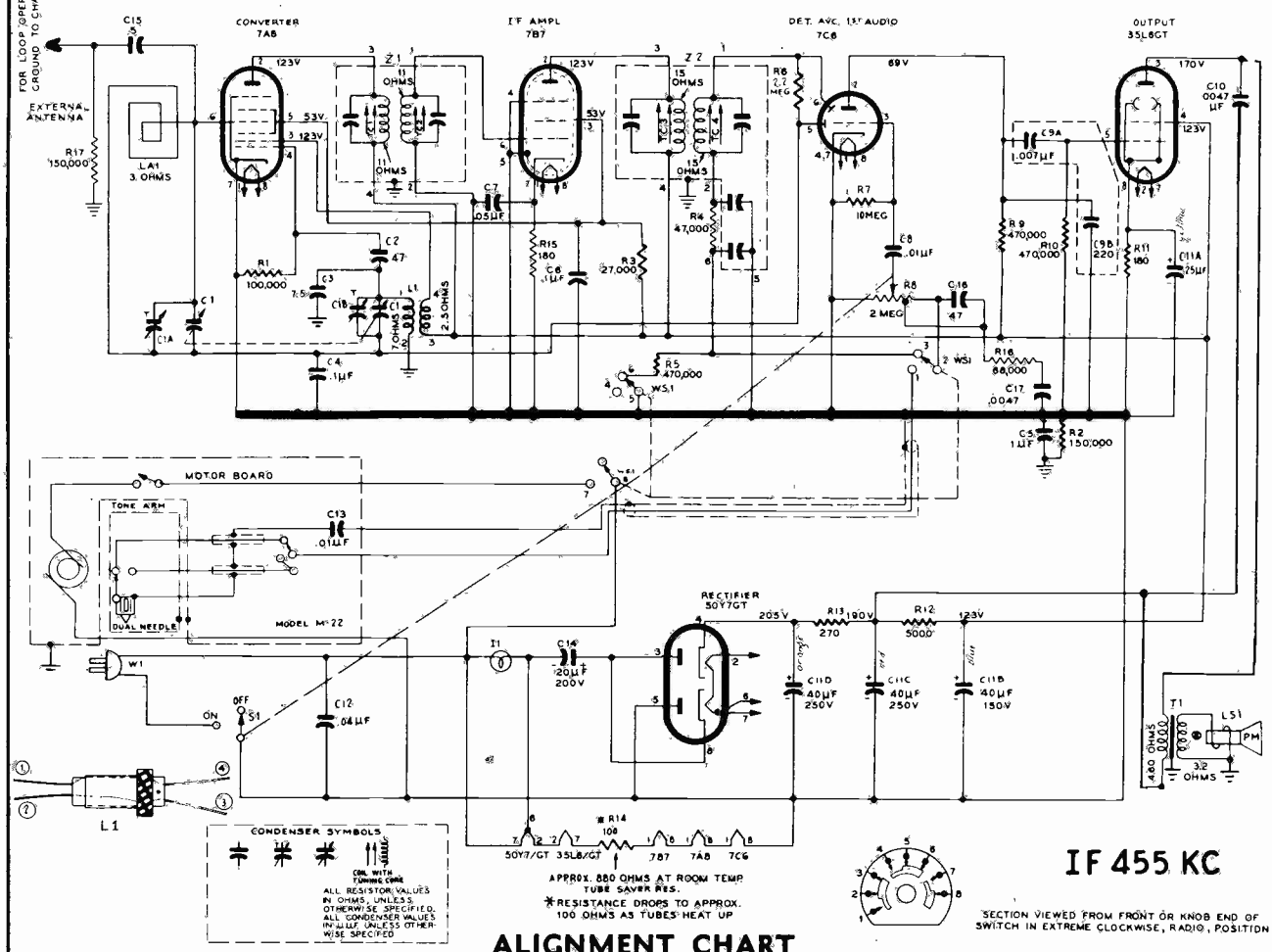

ALIGNMENT CHART

STEP	SIGNAL GENERATOR		RADIO		ADJUST TRIMMER
	CONNECTION TO RADIO	DIAL SETTING	DIAL SETTING	SPECIAL INSTRUCTIONS	
1	Through a .01-µf. condenser to pin 6 of 7A8 converter tube.	455 kc.	Gang fully open.	Adjust, in order given, for maximum output. TC2 and TC4 are located at top of transformers.	TC4—2nd i-f sec. TC3—2nd i-f pri. TC2—1st i-f sec. TC1—1st i-f pri.
2	Radiating loop (see note below).	1600 kc.	1600 kc.	Adjust for maximum.	C1B—osc. trimmer
3	Same as step 2.	1500 kc.	1500 kc.	Adjust for maximum.	C1A—ant. trimmer

RADIATING LOOP: Make up a 6 to 8 turn, 8-inch-diameter loop from insulated wire, connect to signal generator output leads, and place near radio loop.

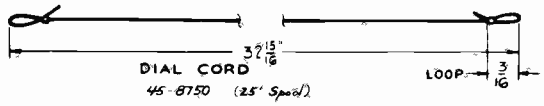

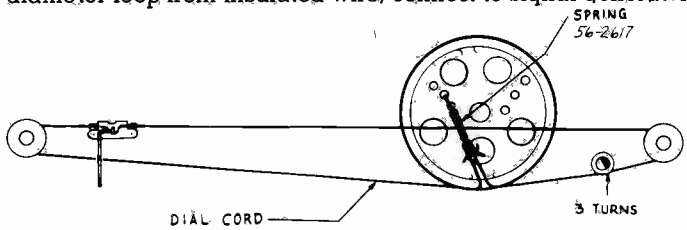

MASCO

MASCO Tape Recorders Models 52, 52C, 52CR, 52L, 52LR, and 52R.

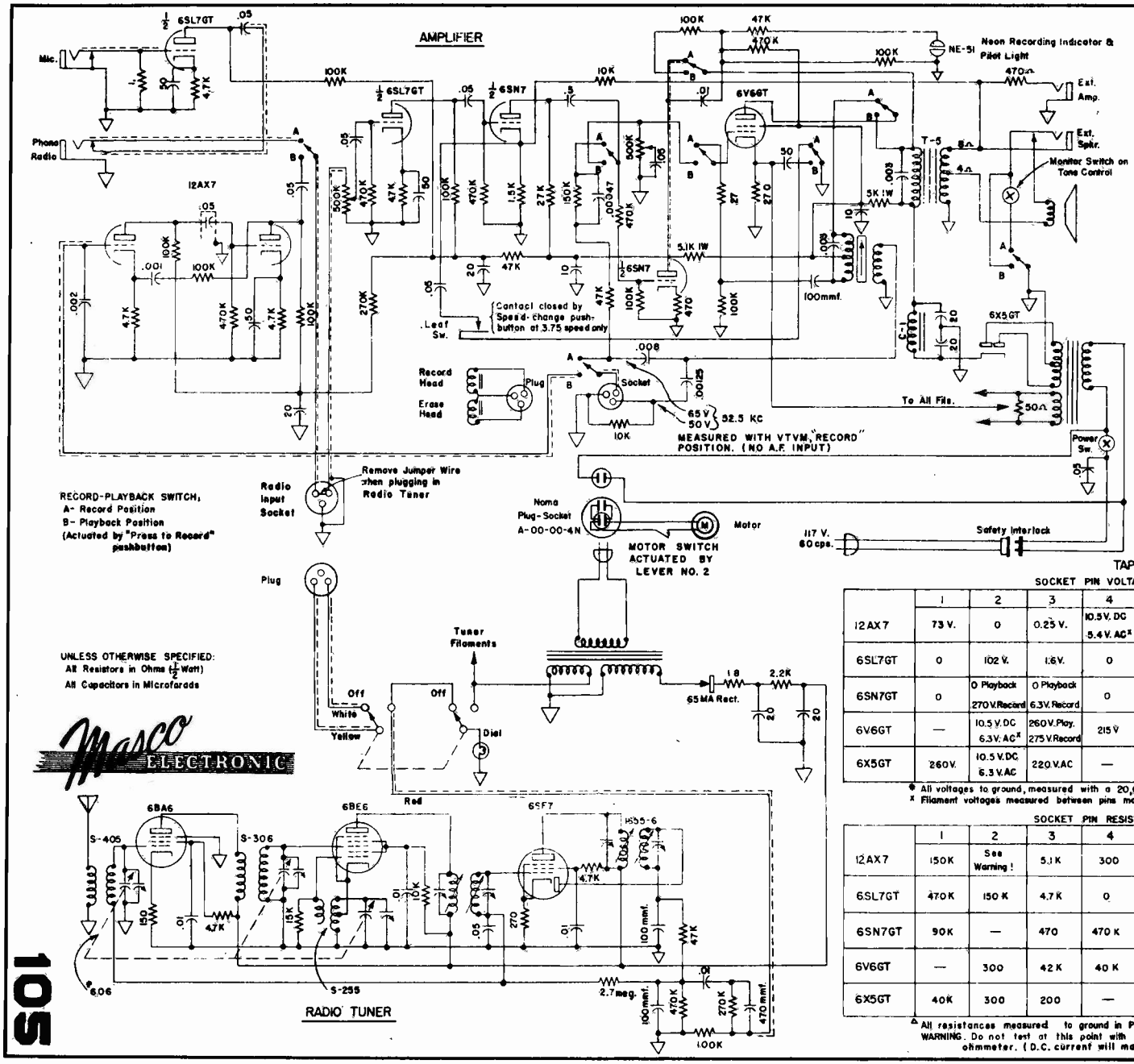

TAPE RECORDER RADIO TUNER

Voltage Measurements			
TUBE	6BA6	6BE6	6SF7
PIN # 1	-0.85V.DC	-2 V.DC	—
2	0	0	-0.85V.DC
3	0	0	0.6V.DC
4	6.3 V.AC	6.3 V.AC	107 V.DC
5	94 V.DC	94 V.DC	-0.85 V.DC
6	102 V.DC	60 V.DC	90 V.DC
7	0.3 V.DC	0	6.3 V.AC
8	—	—	0

All voltages to ground, measured with 20,000 ohm/volt meter

TAPE RECORDER AMPLIFIER

SOCKET PIN VOLTAGES*

	1	2	3	4	5	6	7	8	9
12AX7	73 V.	0	0.25 V.	10.5 V. DC 5.4 V. AC[x]	10.5 V. DC 5.4 V. AC[x]	73 V.	0	0.35 V.	10.5 V. DC
6SL7GT	0	102 V.	1.6 V.	0	110 V.	1.7 V.	10.5 V. DC 6.3 V. AC[x]	10.5 V. DC 6.3 V. AC[x]	—
6SN7GT	0	0 Playback 270 V. Record	0 Playback 6.3 V. Record	0	105 V.	4 V.	10.5 V. DC 6.3 V. AC[x]	10.5 V. DC 6.3 V. AC[x]	—
6V6GT	—	10.5 V. DC 6.3 V. AC[x]	260 V. Play. 275 V. Record	215 V	0 Playback -38 V Record	—	10.5 V. DC 6.3 V. AC[x]	10.5 V. Play. 10.0 V. Record	—
6X5GT	260 V.	10.5 V. DC 6.3 V. AC	220 V. AC	—	220 V. AC	—	10.5 V. DC 6.3 V. AC	295 V.	—

* All voltages to ground, measured with a 20,000 ohm per volt meter
x Filament voltages measured between pins marked "X"

SOCKET PIN RESISTANCES△

	1	2	3	4	5	6	7	8	9
12AX7	150K	See Warning!	5.1 K	300	300	150 K	470K	4.7 K	300
6SL7GT	470K	150 K	4.7 K	0	140 K	4.7 K	300	300	—
6SN7GT	90K	—	470	470 K	75 K	1.5K	300	300	—
6V6GT	—	300	42 K	40 K	270K	—	300	270	—
6X5GT	40K	300	200	—	200	—	300	40 K	—

△ All resistances measured to ground in Playback position.
WARNING. Do not test at this point with ohmmeter. Do not test head with ohmmeter. (D.C. current will magnetize core.)

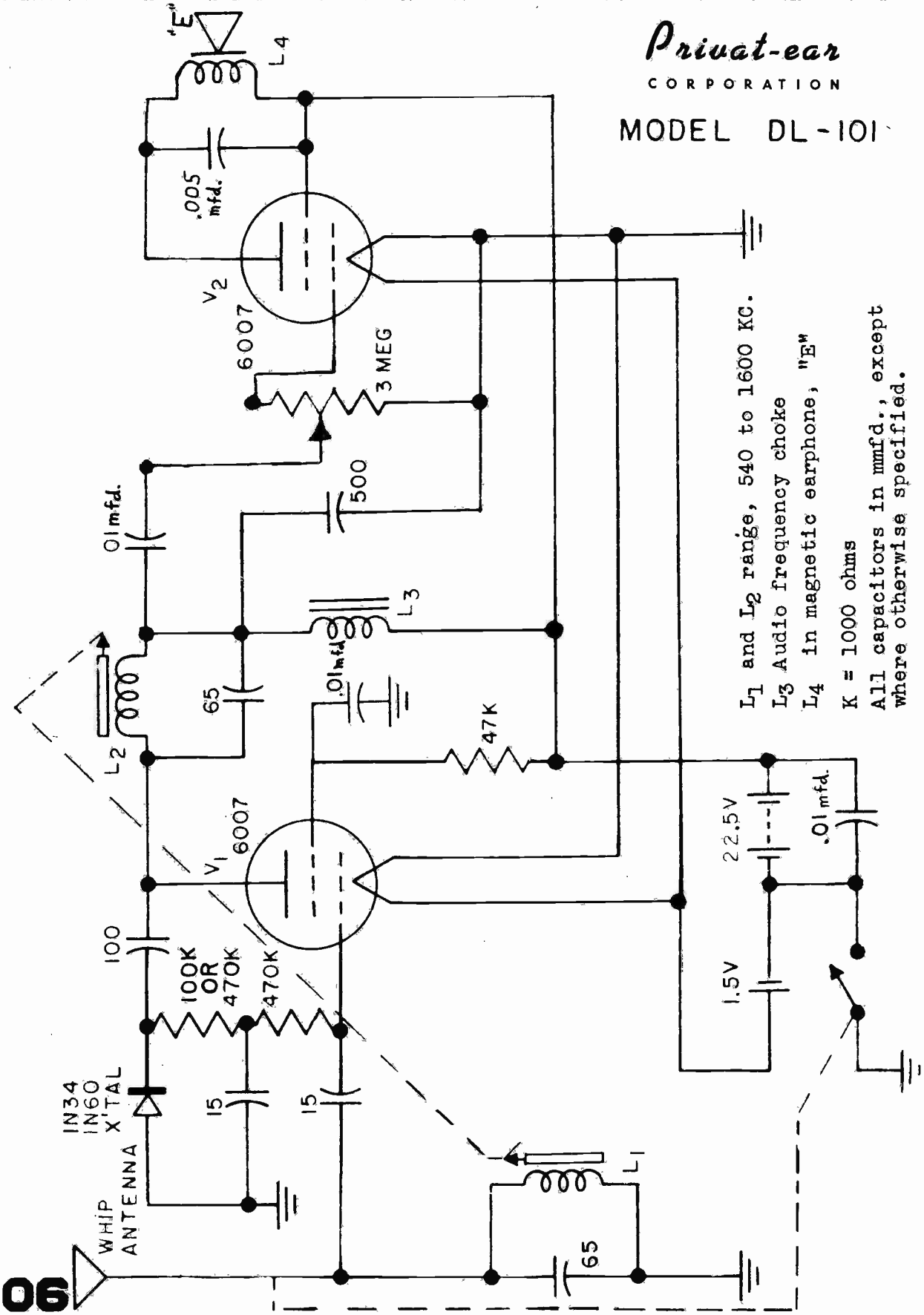
Privat-ear
CORPORATION
MODEL DL-101
"E"
L4
.005 mfd.
V2
6007
3 MEG
500
.01 mfd.
L3
.01 mfd.
65
L2
47K
V1
6007
100
100K OR 470K
470K
15
15
IN34
IN60
X'TAL
WHIP ANTENNA
L1
65
22.5V
1.5V
.01 mfd.
L1 and L2 range, 540 to 1600 KC.
L3 Audio frequency choke
L4 in magnetic earphone, "E"
K = 1000 ohms
All capacitors in mmfd., except where otherwise specified.

RCA VICTOR

MODEL 1R81

Chassis Nos. RC-1102, RC-1102A, RC-1102B, RC-1102C

Continued on the next three pages.

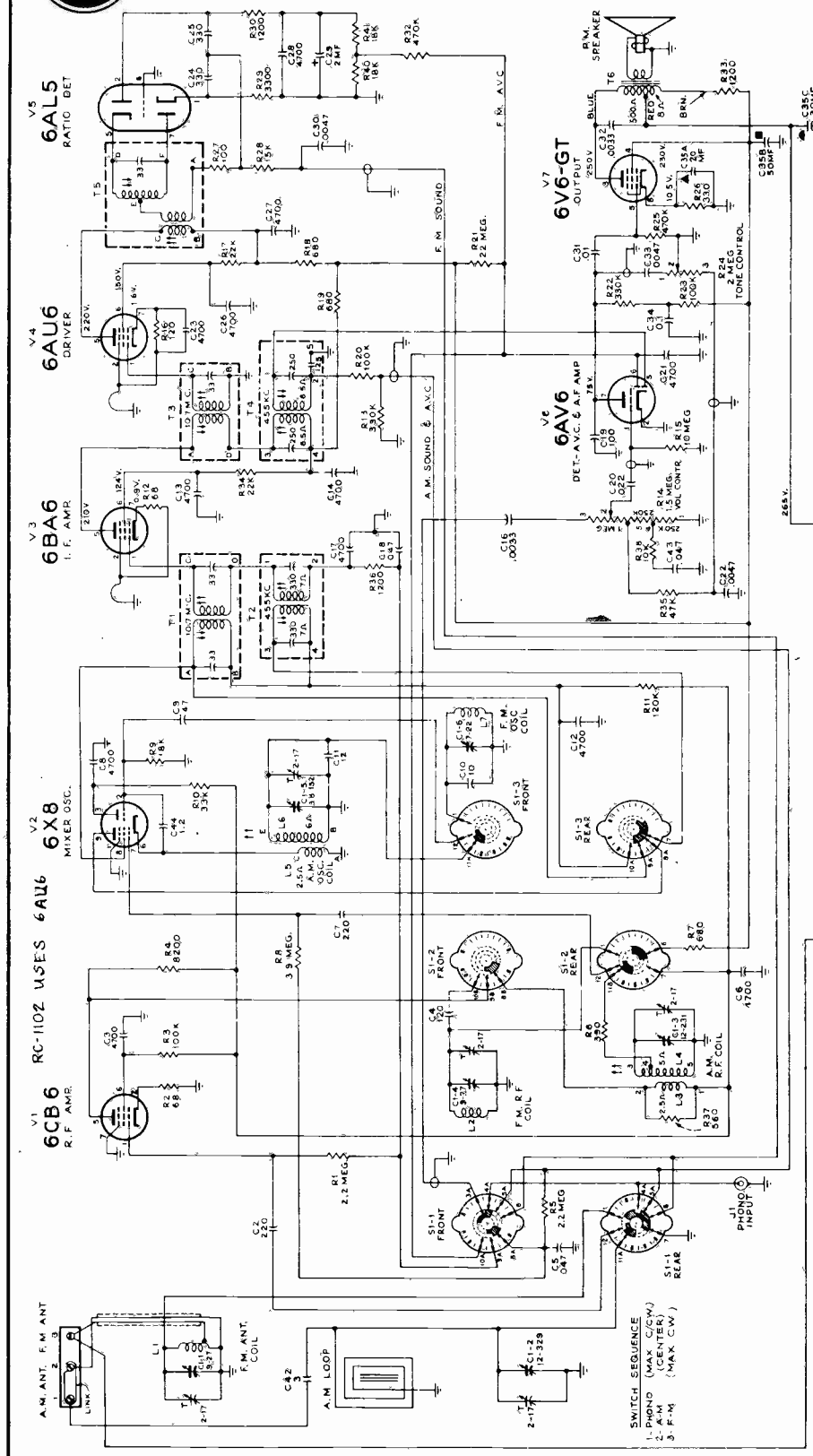

(Chassis RC-1102 and RC-1102A are similar to this circuit).

Complete Schematic Diagram—Chassis Nos. RC-1102B, RC-1102C

Simplified schematics and alignment facts are presented on the next three pages.

Note:
In PHONO operation, the I.F. amplifier (6BA6) grid is "free floating" (not returned to ground) although plate and screen voltages are applied. However the grid cannot go positive due to its being tied to the R.F. amplifier grid thru R36 (1200 ohms) and R1 (2.2 meg.). This would cause the R.F. amplifier grid to conduct as a diode in the event of a positive voltage on it. It is desired to have the I.F. amplifier to draw current under all operating conditions to provide best voltage regulation.

RCA Victor Model 1R81, Chassis RC-1102, etc., continued.

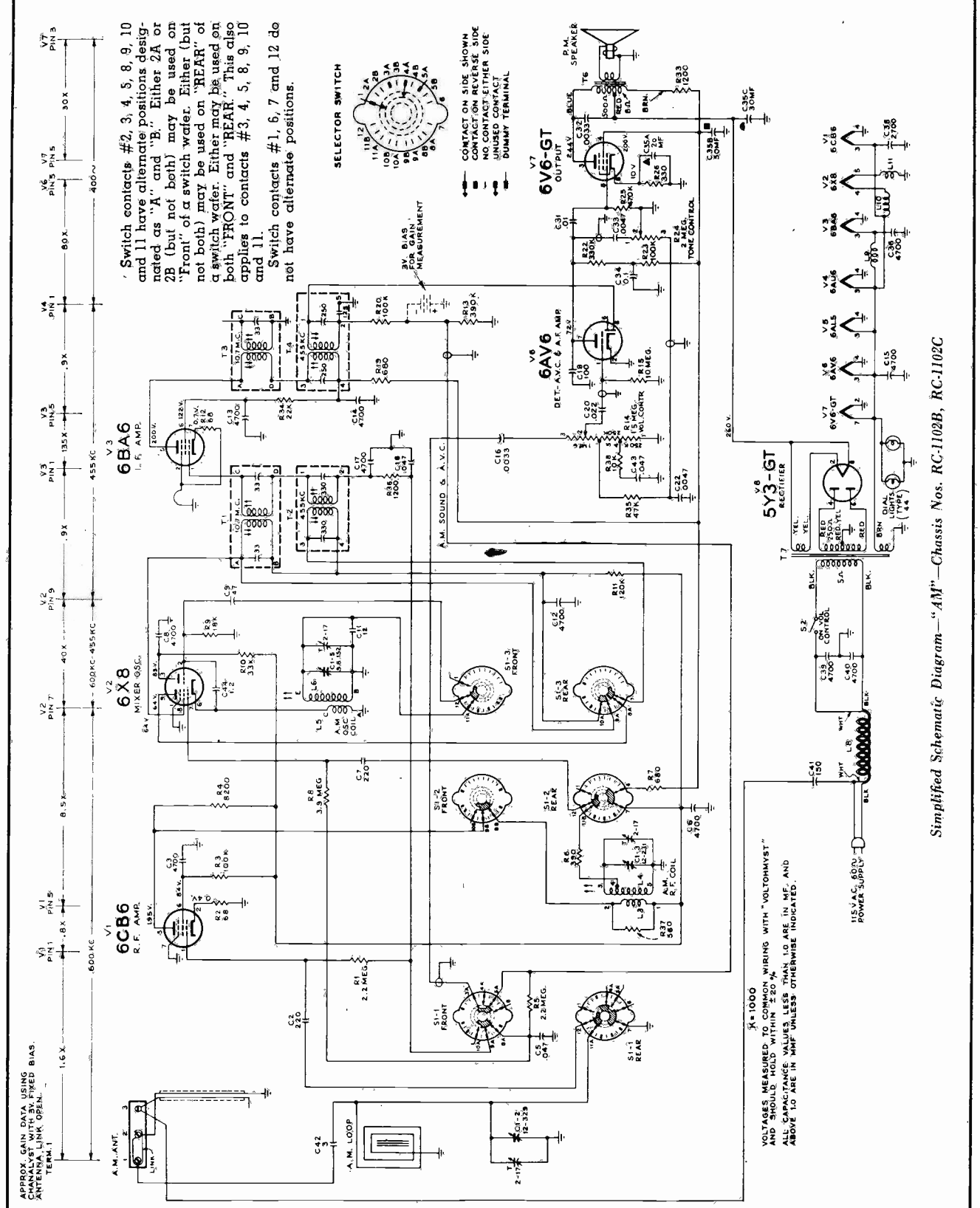

Simplified Schematic Diagram—"AM"—Chassis Nos. RC-1102B, RC-1102C

RCA Victor Model 1R81
(Continued)

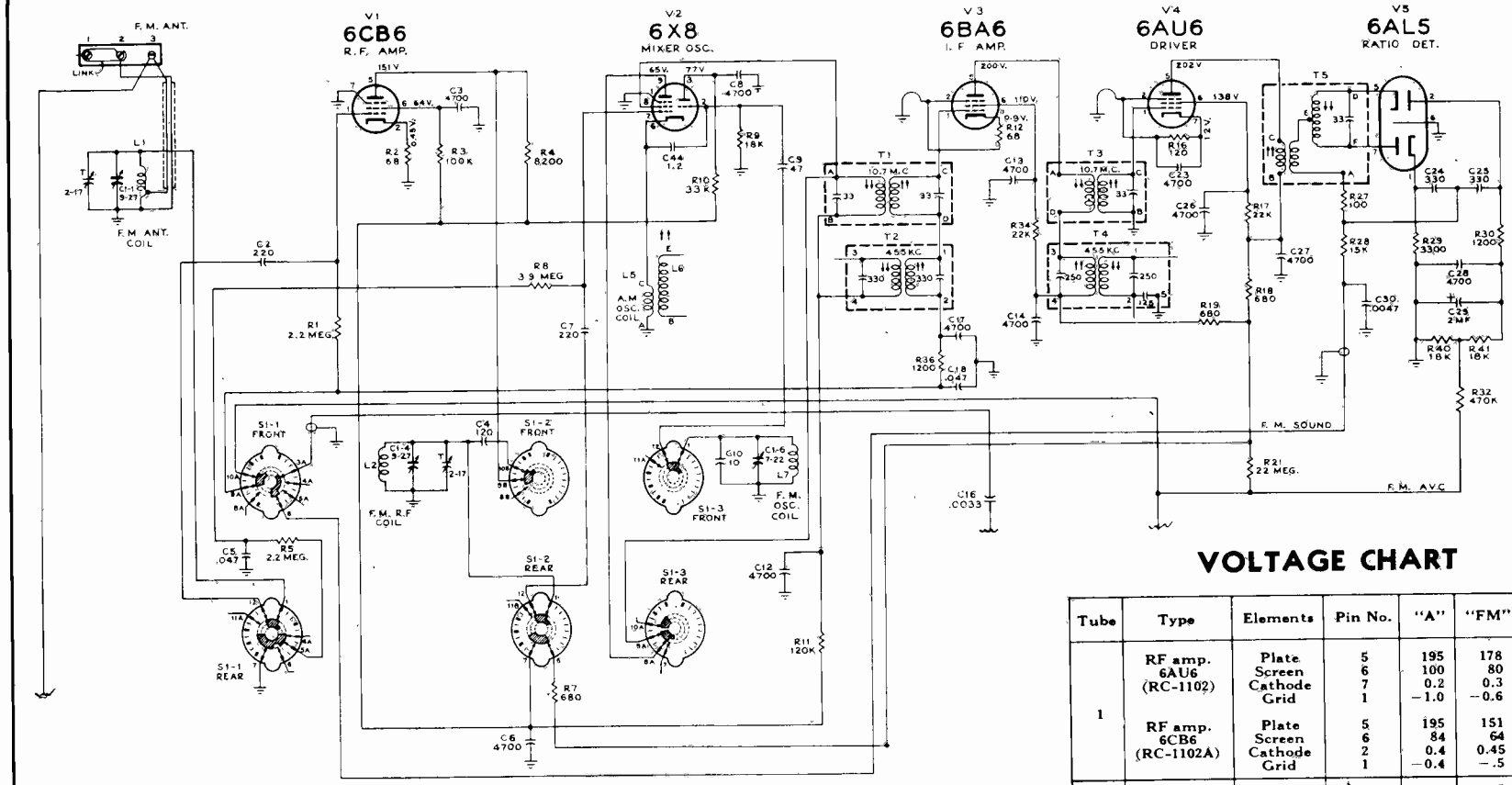

Simplified Schematic Diagram—"FM"—Chassis Nos. RC-1102B, RC-1102C

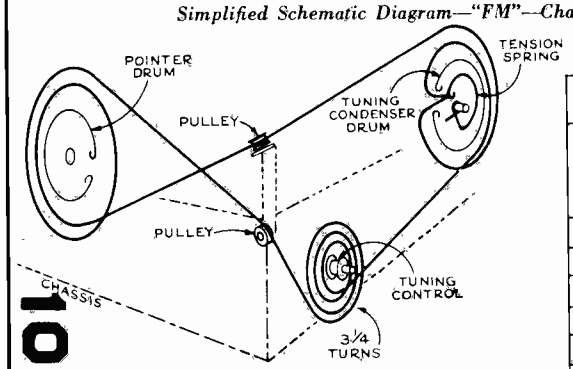

Dial Cord and Drive Assembly

CATHODE CURRENTS (MA)

Tube		Terminal	A.M.	F.M.	Phono
1	6AU6 (RC-1102)	7	2.9	4.0	—
	6CB6 (RC-1102A)	2	5.1	5.9	—
2	6X8	6	4.6	4.6	—
3	6BA6	7	11.6	13.2	13.6
4	6AU6	7	10.4	10.2	11.2
5	6AL5	—	—	—	—
6	6AV6	2	0.3	0.3	0.36
7	6V6GT	8	34	33.4	37
8	5Y3GT	8	65	66	63

VOLTAGE CHART

Tube	Type	Elements	Pin No.	"A"	"FM"	Phono.
1	RF amp. 6AU6 (RC-1102)	Plate	5	195	178	—
		Screen	6	100	80	—
		Cathode	7	0.2	0.3	—
		Grid	1	−1.0	−0.6	—
	RF amp. 6CB6 (RC-1102A)	Plate	5	195	151	—
		Screen	6	84	64	—
		Cathode	2	0.4	0.45	—
		Grid	1	−0.4	−.5	—
2	Mixer 6X8	Plate	9	64	65	—
		Screen	8	64	65	—
		Grid	7	−3.1	−2.2	—
	Osc. 6X8	Plate	3	83	77	—
		Grid	2	−5.3	−1.1	—
3	IF amp. 6BA6	Plate	5	200	200	210
		Screen	6	122	110	124
		Cathode	7	0.7	0.9	0.9
		Grid	1	−1.4	−0.4	−0.7
4	Driver 6AU6	Plate	5	199	202	220
		Screen	6	130	138	150
		Cathode	7	1.2	1.2	1.6
5	Ratio Det. 6AL5	—	—	—	—	—
6	AF amp. 6AV6	Plate	7	72	72	75
		Grid	1	−0.8	−0.7	−0.7
7	Output 6V6GT	Plate	3	244	248	248
		Screen	4	200	210	230
		Cathode	8	10	10.5	12
8	Rectifier 5Y3GT	Fil.	8	260	262	265

RCA Victor Model 1R81
(Continued)

Alignment Procedure

Alignment Indicators:

For measuring the developed d-c voltage across C29 during FM alignment an RCA VoltOhmyst or an equivalent meter should be used. An output meter connected across the voice coil is also needed to indicate minimum audio output during FM Ratio Detector alignment.

Oscilloscope Alignment:

It is preferable to use a sweep generator and oscilloscope for aligning I.F. and R.F. circuits to obtain a visual observation of curve shape during alignment.

With FM sweep generator connected between FM ant. (#3) terminal and chassis and oscilloscope connected between the junction of R28-C30 and chassis the overall FM response may be observed. There should be a peak to peak separation of not less than 180 kc. with 50,000 mv. input.

AM Alignment

RANGE SWITCH IN AM POSITION

Steps	Connect high side of sig. gen. to—	Sig. gen. output	Turn radio dial to—	Adjust for peak output
1	Pin 1 of V3 6BA6 in series with .01 mfd.	455 kc.	Quiet point at low freq. end.	T4 bottom core (pri.). T4 top core (sec.).
2	Pin 7 of V2 6X8 in series with .01 mfd.			T2 top core (sec.). T2 bottom core (pri.).
3	No. 1 terminal on ant. input strip	1620 kc.	High freq. end of dial (min. cap.)	C1-5T
4		1400 kc.	1400 kc. signal	C1-2T ant. C1-3T r.f.
5		Shunt a 10,000 ohm resistor across the r.f. section of the gang.		
6		600 kc.	600 kc. signal	L6 osc.* (Rock gang.)
7		Remove the 10,000 ohm resistor and peak L4 r.f.*		
8	Repeat 3, 4, 5, 6 and 7			

* The correct adjustment of the OSC. (L6) core is that peak obtained with core farthest away from the coil mounting clips. R.F. (L4) core should be set to the peak obtained (2 peaks are seldom obtainable) with core closest to the mounting clips.

FM Alignment

RANGE SWITCH IN FM POSITION — VOLUME CONTROL MAXIMUM

Steps	Connect high side of sig. gen. to—	Sig. gen. output	Turn radio dial to—	Adjust for peak output
1	Connect the d-c. probe of a VoltOhmyst to the negative lead of the 2 mfd. capacitor C29 and the common lead to chassis.			
2	Pin 1 of V4 6AU6 in series with .01 mfd.	10.7 mc. modulated 30% 400 cycles AM	Quiet point at low freq. end.	T5 top core for max. d-c voltage across C29. T5 bottom core for min. audio output.*
3	Pin 1 of V3 6BA6 in series with .01 mfd.	Adjust to provide 3 to 4 volts indication on VoltOhmyst during alignment.		†† T1 top core (sec.). T1 bottom core (pri.).
4	Pin 7 of V2 6X8 in series with .01 mfd.			†† T2 top core (sec.). T2 bottom core (pri.).
5	#3 ant. term. in series with a 300 ohm resistor. (Remove ant. lead from #3 term.)	90 mc.	90 mc.	L7 osc.**
6		106 mc.	106 mc. signal	C1-1T ant. C1-4T r.f.
7		90 mc.	90 mc. signal	L1 ant.** L2 r.f.**
8	Repeat Steps 5, 6 and 7 until further adjustment does not improve calibration.			

* Two or more points may be found which lower the audio output. At the correct point the minimum audio output is approached rapidly and is much lower than at any incorrect point.

†† Alternate loading may be necessary to provide accurate observation of peaks.

Alternate loading involves the use of a 680 ohm resistor to load the plate winding while the grid winding of the SAME TRANSFORMER is being peaked. Then the grid winding is loaded with the resistor while the plate winding is peaked. Only one winding is loaded at any one time. Remove the 680 ohm resistor after T3 and T1 have been aligned.

Oscillator frequency is above signal frequency on both AM and FM.

Extreme care should be used to avoid running the I.F. cores all the way through the winding and out the other end. Double peaks or serious overcoupling will result. The correct adjustment may be determined by starting the core all the way out (threads extended). The first peak obtained when tuning should be the correct peak.

** **Note:** FM antenna, mixer and oscillator coils are adjustable by increasing or decreasing the spacing between turns. The location of the tap on the antenna coil is ⅝ turn ± ⅛ turn from the ground end.

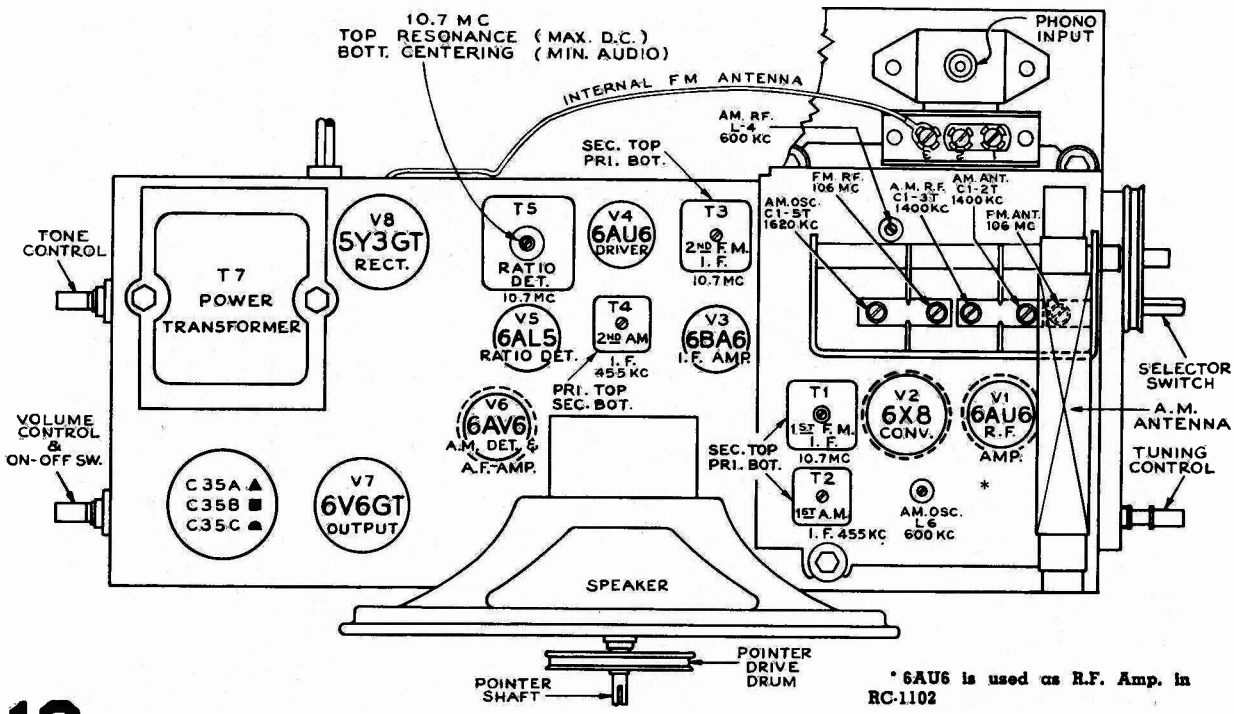

Tube and Trimmer Locations

* 6AU6 is used as R.F. Amp. in RC-1102

6CB6 is used as R.F. Amp. in RC-1102A, RC-1102B and RC-1102C

RCA VICTOR

AC-DC Radio Receiver

MODELS 1X591, 1X592

Chassis No. RC 1079K, RC 1079L

Lead Dress

1. Dress all heater leads down to chassis and away from all audio grid and plate wiring.
2. Dress power cord against chassis base.
3. Dress capacitor C18 against back apron.
4. Dress capacitor C13 down to base alongside of shielded lead.
5. Dress output transformer leads down to chassis.
6. Dress capacitors C9 and C15 as direct as possible.
7. Dress dial lamp leads on top of chassis between 12SQ7 and 50L6GT tubes; below chassis, as short as possible to rectifier socket.
8. Dress excess loop leads away from tubes and clear of tuning condenser.

Test-Oscillator.—For all alignment operations, connect the low side of the test-oscillator to the receiver chassis, and keep the oscillator output as low as possible to avoid a-v-c action.

On AC operation an isolation transformer (115 v./115 v.) may be necessary for the receiver if the test oscillator is also AC operated.

Dial Calibration

With the tuning condenser fully meshed, the dial pointer should be set to the first score mark at the left-hand end of the dial back plate. The four score marks represent:

Max cap. 600 kc 1400 kc min. cap.

Alignment Procedure

Steps	Connect the high side of test-oscillator to—	Tune test-osc. to—	Turn radio dial to—	Adjust the following for max. output
1	12SK7 I-F grid through 0.1 mfd. capacitor	455 kc	Quiet-point 1600 kc end of dial	T2 (top and bottom) 2nd I-F trans.
2	Stator of C1 through 0.1 mfd.			*T1 (top and bottom) 1st I-F trans.
3	Short wire placed near loop to radiate signal	1620 kc	Min. cap.	C4 (osc.)
4		1400 kc	1400 kc signal	†C2 (ant.)
5		600 kc	600 kc signal	L3 (osc.) Rock gang
6		Repeat steps 3, 4 and 5.		

* Do not readjust T2 when test oscillator is connected to C1.

† When adjusting C2 (ant. trimmer) it is necessary to have the speaker and loop in the same position and spacing as they will have when assembled in the cabinet.

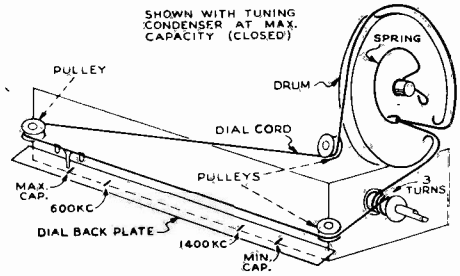

Dial Indicator and Drive Cord

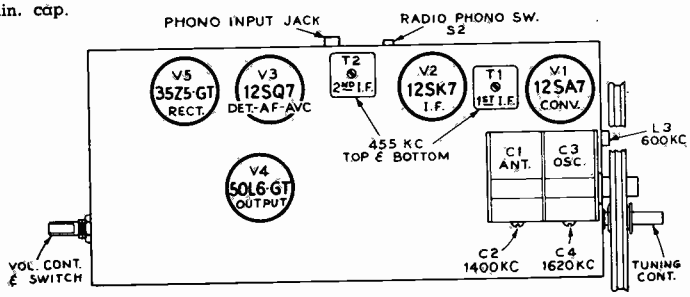

Tube and Trimmer Locations

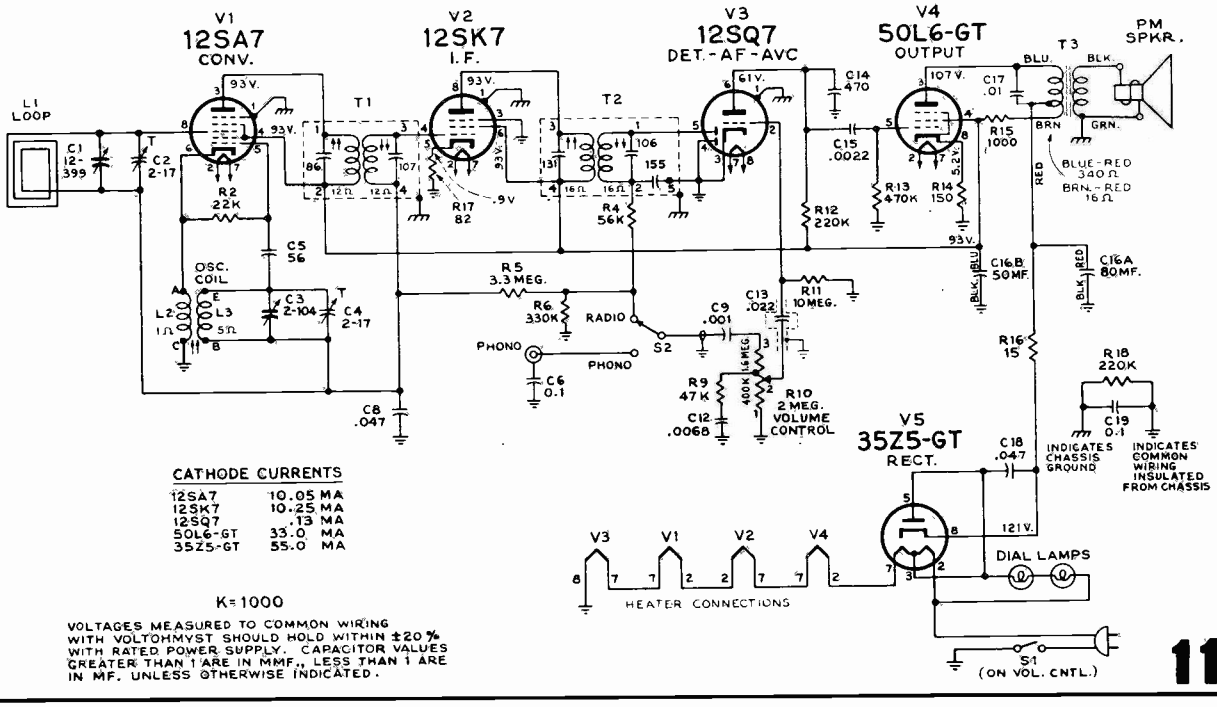

CATHODE CURRENTS

12SA7	10.05 MA
12SK7	10.25 MA
12SQ7	.13 MA
50L6-GT	33.0 MA
35Z5-GT	55.0 MA

K=1000

VOLTAGES MEASURED TO COMMON WIRING WITH VOLTOHMYST SHOULD HOLD WITHIN ±20% WITH RATED POWER SUPPLY. CAPACITOR VALUES GREATER THAN 1 ARE IN MMF., LESS THAN 1 ARE IN MF. UNLESS OTHERWISE INDICATED.

RCA VICTOR

1X51 Series

Chassis No. RC 1104, RC 1104A, RC 1104B

1X51 SERIES:

1X51 (Maroon)	*1X52 (Ivory)*	*1X53 (Green)*
1X54 (Tan)	*1X55 (Blue)*	*1X56 (Red)*
	1X57 (White)	

Chassis using different tubes:

CHASSIS NO. RC 1104-1, RC 1104A-1, RC 1104B-1

Same as above except rectifier is RCA 35W4 instead of RCA 35Z5GT.

CHASSIS NO. RC 1104C, RC 1104D, RC 1104E

(1) RCA 12BE6 ..... Converter
(2) RCA 12BA6 ..... I.F. Amplifier
(3) RCA 12AV6 ..... Det.—A.V.C.—A.F. Amp.
(4) RCA 50C5 ..... Output
(5) RCA 35W4 ..... Rectifier

Test-Oscillator

For all alignment operations, connect the low side of the test-oscillator to the receiver chassis, and keep the oscillator output as low as possible to avoid a-v-c action.

On AC operation an isolation transformer (115 v./115 v.) may be necessary for the receiver if the test oscillator is also AC operated.

Dial Centering

If the mounting of the tuning condenser has been disturbed, it may be necessary to adjust its position after replacing the chassis in the cabinet. This may be done in the following manner:

1. Replace tuning knob.
2. Install chassis and tighten the mounting screws.
3. Loosen the two screws which hold the tuning condenser mounting bracket to the chassis.
4. Adjust the position of the tuning condenser mounting bracket so that the tuning knob may be rotated without binding on the cabinet.
5. The two screws should then be tightened to maintain this position.

Alignment Procedure

Steps	Connect the high side of test-oscillator to—	Tune test-osc. to—	Turn radio dial to—	Adjust the following for max. output
1	12BA6 I-F grid through .01 mfd. capacitor	455 kc	Quiet-point 1600 kc end of dial	*T2 (top and bottom) 2nd I-F trans.
2	Stator of C1-2 through .01 mfd.			T1 (top and bottom) 1st I-F trans.
3	Short wire placed near loop to radiate signal	1620 kc	Min. cap.	osc. trimmer
4		1400 kc	1400 kc signal	†ant. trimmer
5		600 kc	600 kc signal	L2 (osc.) Rock gang
6		Repeat steps 3, 4 and 5.		

* Do not readjust T2 when test oscillator is connected to C1-2.

† When adjusting ant. trimmer it is necessary to have the loop in the same position and spacing as it will have when assembled in the cabinet. This spacing is 5½" from dial back plate to loop.

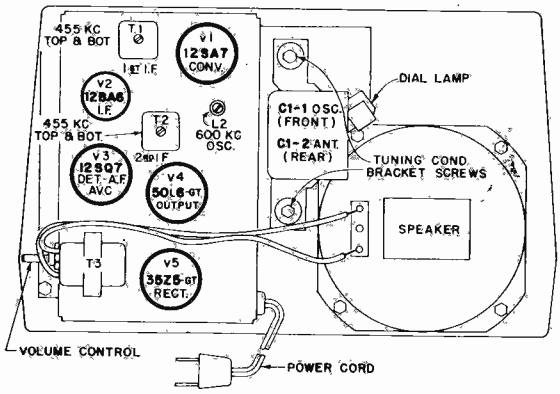

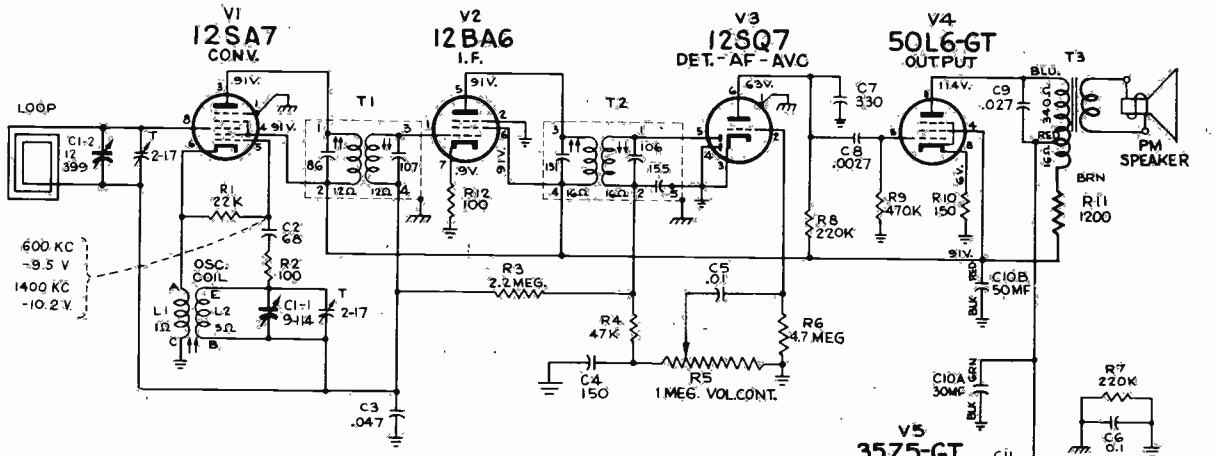

CATHODE CURRENTS

12SA7	9.45MA
12BA6	9.6 MA
12SQ7	.15 MA
50L6-GT	40. MA
35Z5-GT	60. MA

K= 1000

VOLTAGES MEASURED TO COMMON WIRING WITH VOLTOHMYST SHOULD HOLD WITHIN ±20% WITH RATED POWER SUPPLY. CAPACITOR VALUES GREATER THAN 1 ARE IN MMF., LESS THAN 1 ARE IN MF. UNLESS OTHERWISE INDICATED.

CHASSIS NO. RC 1104, RC 1104A, RC 1104B

Schematic Circuit Diagram

RCA VICTOR 2B400 Series

Chassis No. RC-1114

2 B 400 Grey	*2 B 401 Black*	*2 B 402 Ivory*
2 B 403 Green	*2 B 404 Tan*	*2 B 405 Red*

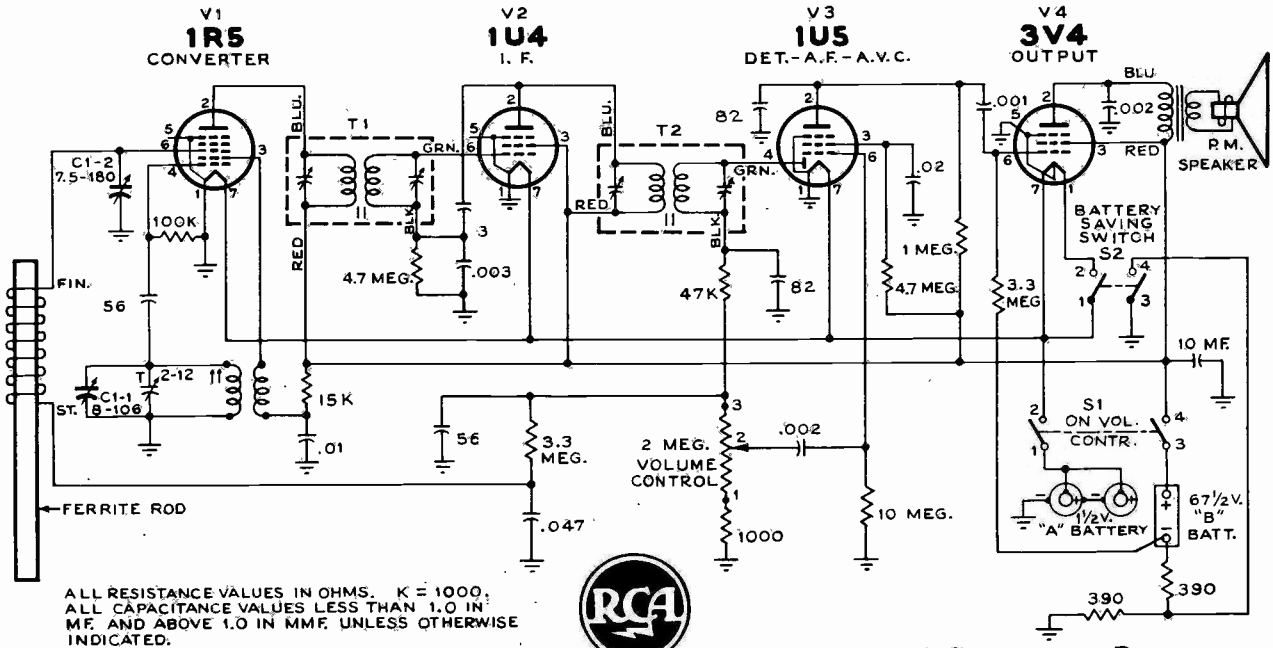

ALL RESISTANCE VALUES IN OHMS. K = 1000. ALL CAPACITANCE VALUES LESS THAN 1.0 IN MF. AND ABOVE 1.0 IN MMF. UNLESS OTHERWISE INDICATED.

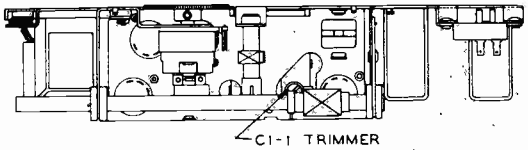

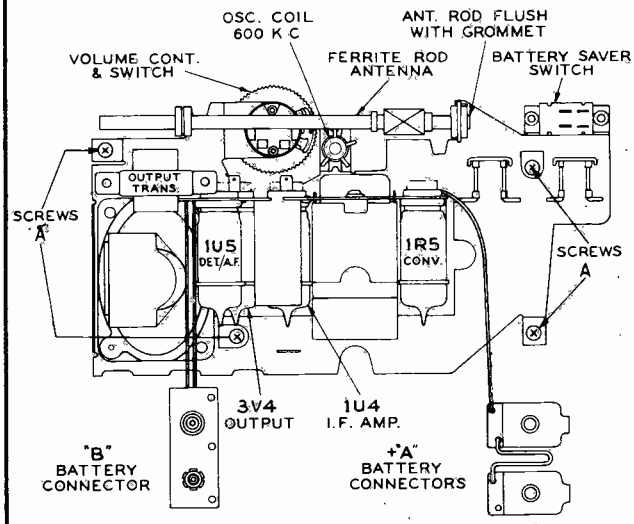

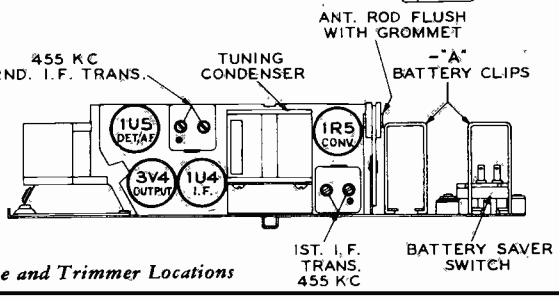

Tube and Trimmer Locations

Replacement of Component Parts

I. To Remove Back Cover

a. Depress top of case midway between the handle supports, until the top end of the back separates from the main case.

b. Pull the back cover back and up, thereby unhooking the retaining lugs in the bottom of the main case.

II. To Replace Batteries

a. Remove back cover.

b. Remove both "A" and "B" batteries. The "B" battery snap fasteners can best be removed by inserting a screwdriver under the snap fastener strip and prying upward.

c. The "A" batteries can easily be removed by pulling up on the spring wire clips.

Note: The "A" and "B" batteries have approximately equal life and therefore it is advisable to replace all batteries at one time.

III. To Remove Chassis

a. Remove dial knob by grasping with finger tips at two sides and pulling.

b. Remove back cover.

c. Remove batteries.

d. Remove "A+" contacts by squeezing against case and sliding out of slots in case.

e. Remove the four screws "A."

f. Grasp the assembly by the speaker and pull the bottom end down and outward to clear the volume control knob.

IV. To Replace Chassis

a. Observe the position of the battery save button extension in relation to the "battery-save" switch. This extension must engage with the center of the battery save switch.

b. Replace in reverse order to that given for chassis removal.

RCA VICTOR

MODEL 2US7

Chassis No. RC-1017A

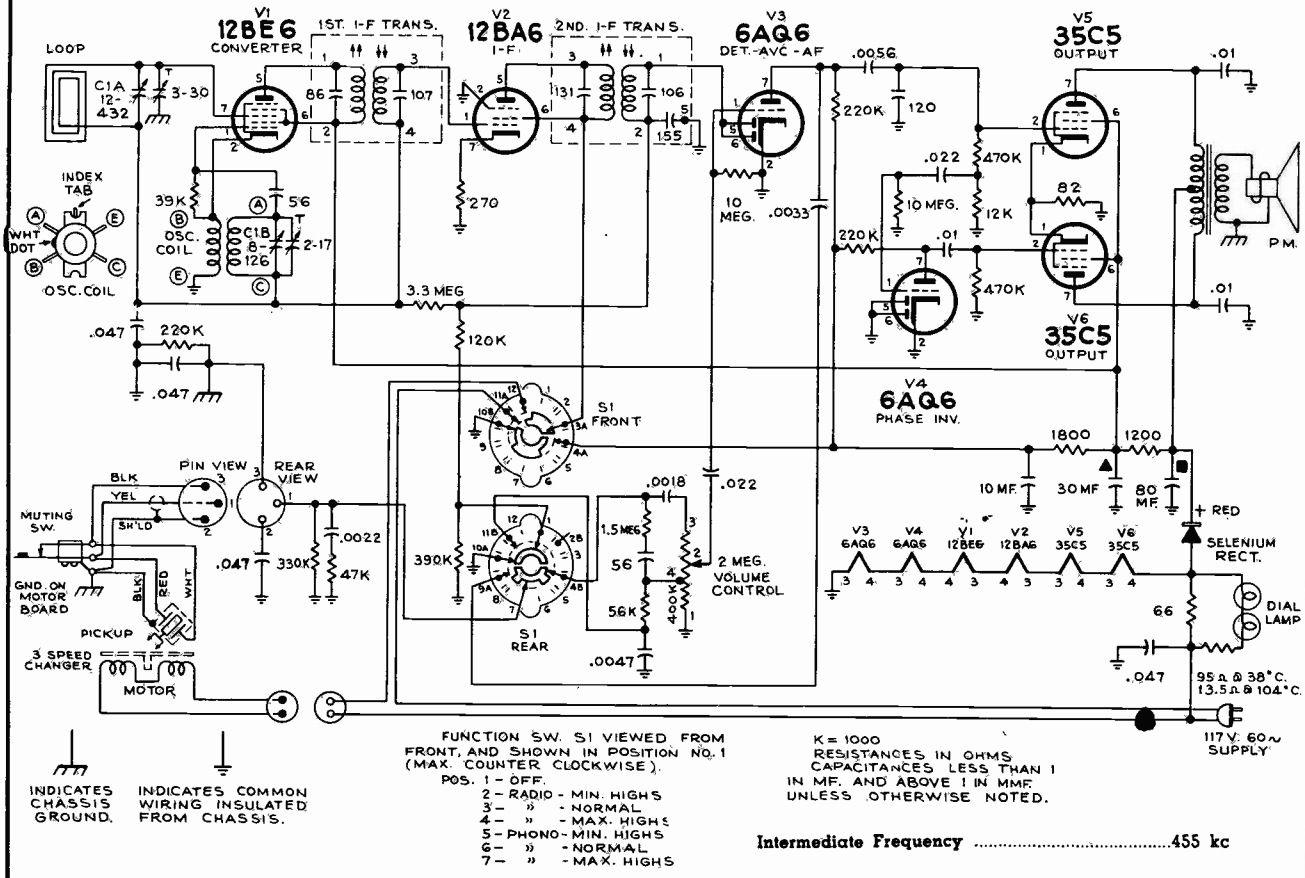

INDICATES CHASSIS GROUND.

INDICATES COMMON WIRING INSULATED FROM CHASSIS.

FUNCTION SW. S1 VIEWED FROM FRONT, AND SHOWN IN POSITION NO. 1 (MAX. COUNTER CLOCKWISE).
POS. 1 - OFF.
2 - RADIO - MIN. HIGHS
3 - » - NORMAL
4 - » - MAX. HIGHS
5 - PHONO - MIN. HIGHS
6 - » - NORMAL
7 - » - MAX. HIGHS

K = 1000
RESISTANCES IN OHMS
CAPACITANCES LESS THAN 1 IN MF. AND ABOVE 1 IN MMF. UNLESS OTHERWISE NOTED.

Intermediate Frequency .....455 kc

RCA VICTOR

Models 2ES3, 2ES38

Chassis No. RS-142

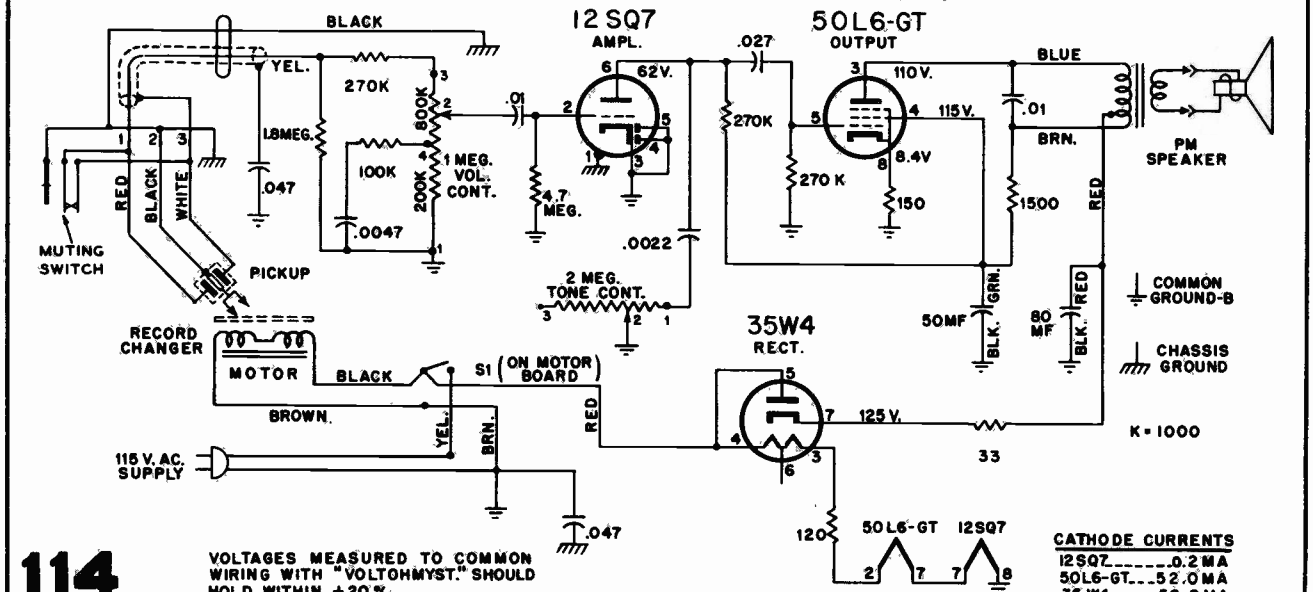

CATHODE CURRENTS

12SQ7	0.2 MA
50L6-GT	52.0 MA
35W4	52.2 MA

VOLTAGES MEASURED TO COMMON WIRING WITH "VOLTOHMYST." SHOULD HOLD WITHIN ±20%.

RCA VICTOR MODEL 45-EY-26

Chassis No. RS-138L

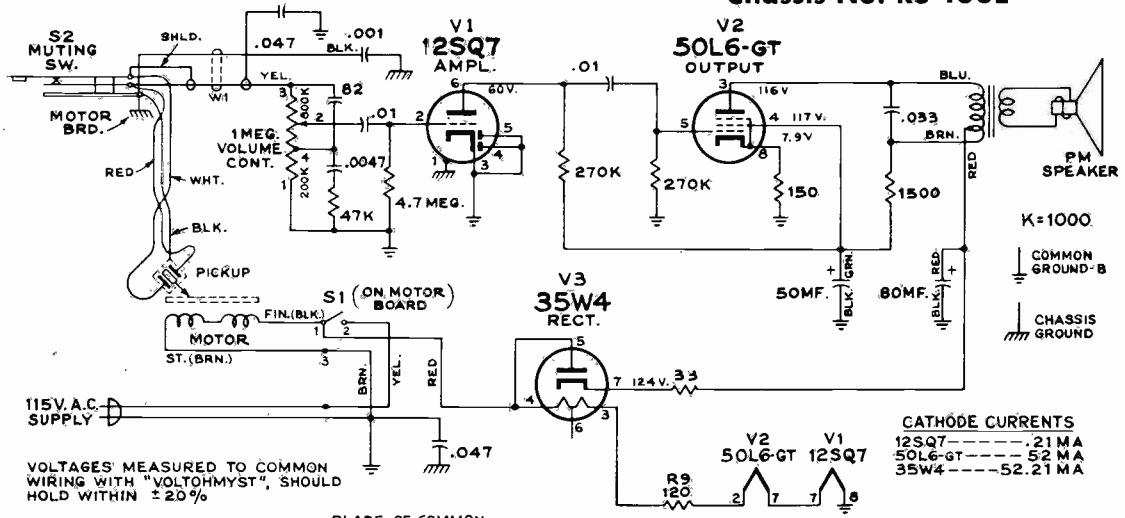

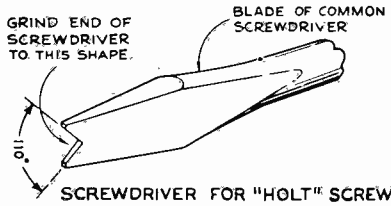

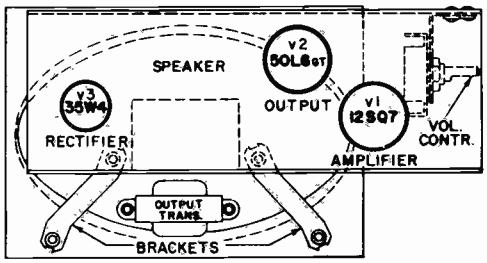

MODEL 45-EY-4

Chassis No. RS 140

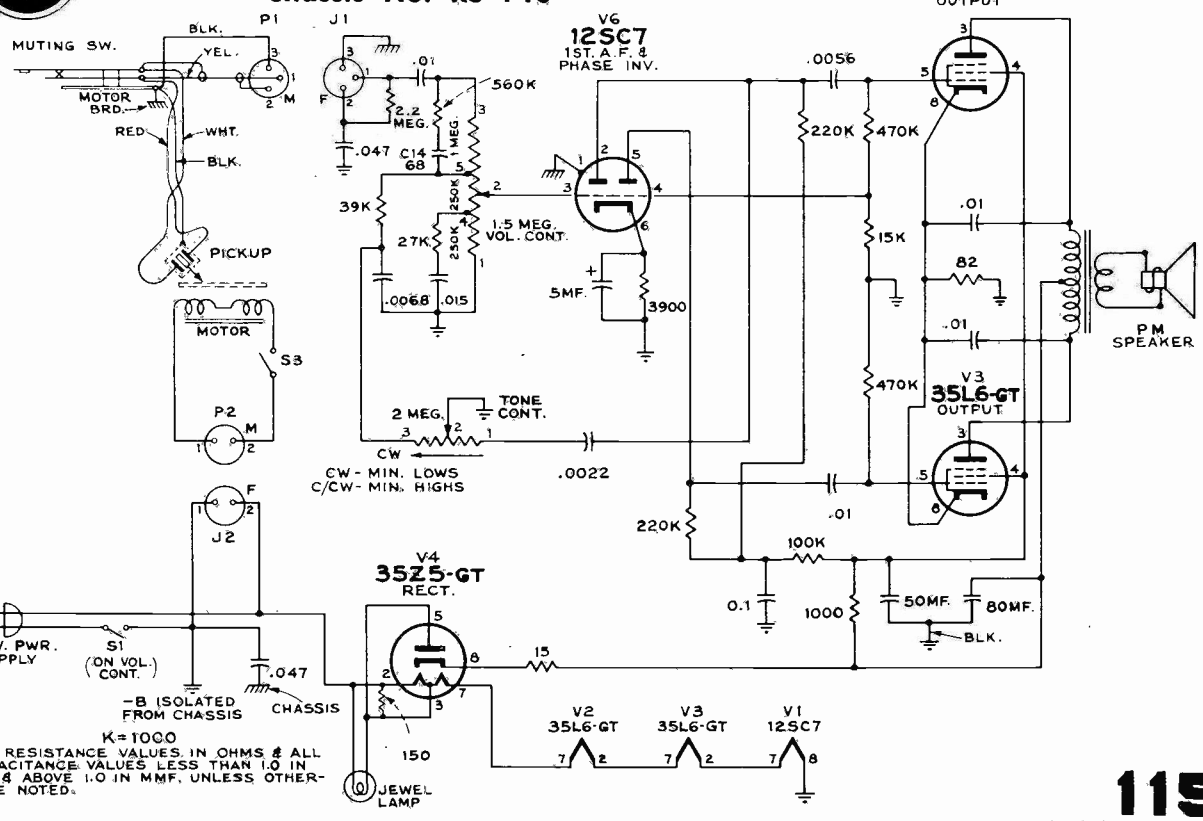

K=1000

ALL RESISTANCE VALUES IN OHMS & ALL CAPACITANCE VALUES LESS THAN 1.0 IN MF. & ABOVE 1.0 IN MMF. UNLESS OTHERWISE NOTED.

RCA VICTOR MODEL PX 600

Chassis No. RC-1110

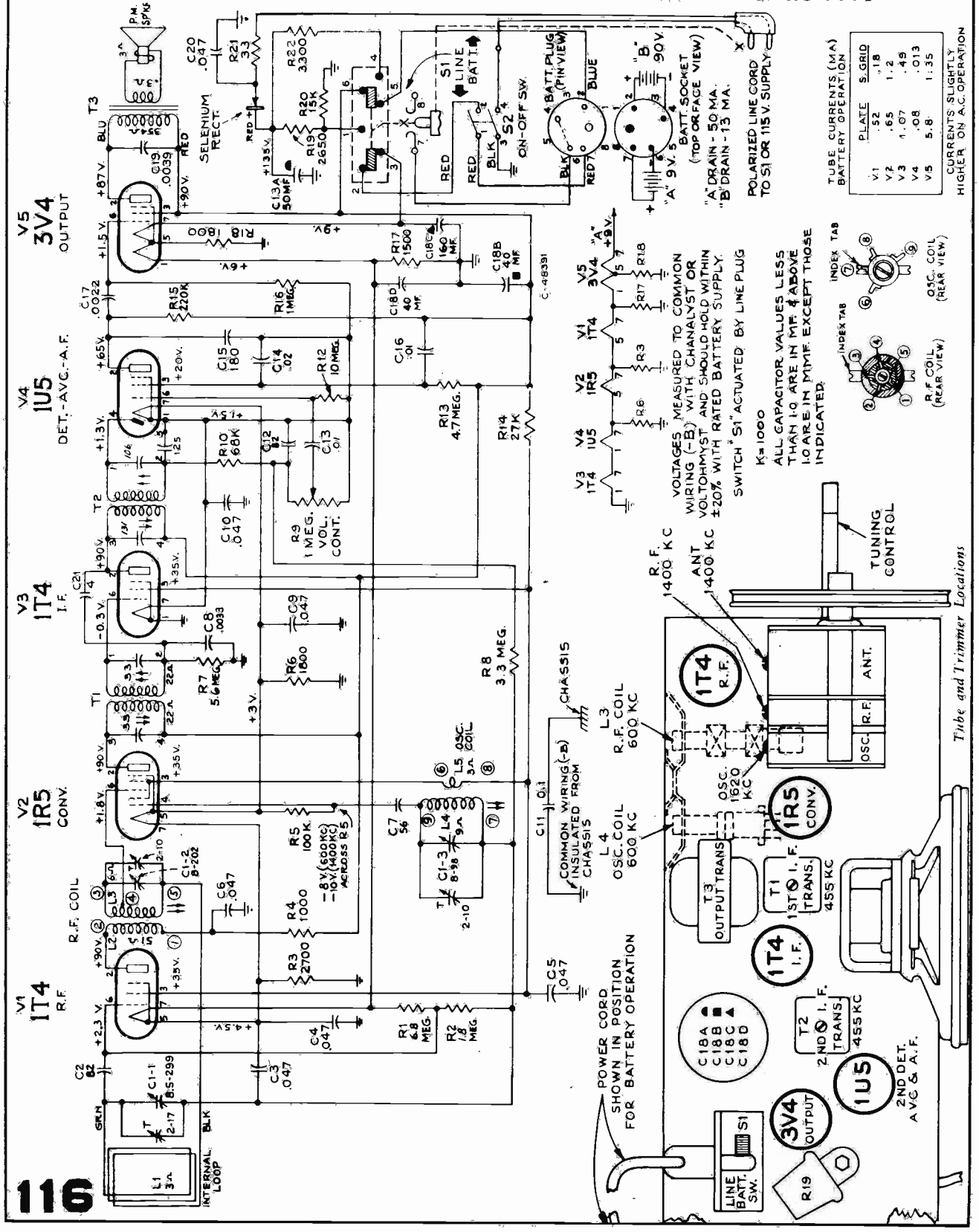

Silvertone

Sears, Roebuck & Co.
Clock Receiver Nos. 10 & 11
Chassis 132.896

ALIGNMENT DATA

Tuning range 540 Kc. to 1600 Kc. Intermediate frequency—455 Kc. I-f and r-f measurements made at .5 watt output—approximately 1.26 volts on a rectifier type voltmeter connected across the voice coil.

Approximate inputs for .5 watt output: I-f 300 uv. R-f with standard loop: at 600 Kc 2500 uv/m; at 1000 Kc 2000 uv/m; at 1400 Kc 1500 uv/m. R-f at external antenna connection: at 600 Kc 1000 uv; at 1000 Kc 800 uv; at 1400 Kc 500 uv.

Position of Variable	Generator Frequency	Dummy Ant.	Generator Connection (high)	Generator Connection (low)	Adjust Trimmers (in order shown)	Trimmer Function
Open	455 Kc	.05 mfd.	Mixer Grid	Float. Gnd.	A1, A2,	I.F.
1400 Kc	1400 Kc	50 mmfd.	Ext. Ant. Conn.	Float. Gnd.	A3, A4	Osc. Mixer
600 Kc	600 Kc	50 mmfd.	Ext. Ant. Conn.	Float. Gnd.	Check Point	

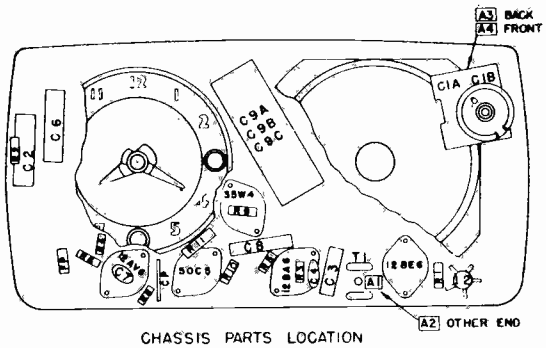

CHASSIS PARTS LOCATION

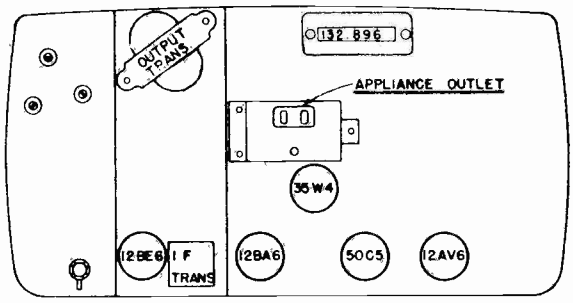

TUBE LAYOUT OUTLINE

SCHEMATIC LOCATION	PART NO.	DESCRIPTION
L1	N24019	Antenna Loop Assembly
	N23994-1	Cabinet, Brown (Cat.No. 10)
	N23994-2	Cabinet, Ivory (Cat.No. 11)
	N23999	Dial Scale
	N24001	Metal Grille
L2	N24020	Coil, Oscillator
C1A,C1B	N24024	Condenser, Variable, 2-gang
C2,C6		Condenser, P.T., .05 uf, 400 V.
C3		Condenser, P.T., .05 uf, 200 V.
C4		Condenser, Ceramic, 1.5 K uuf, 500 V.
C5		Condenser, Ceramic, 47 uuf, 500 V.
C7		Condenser, Disc, 5 K uuf, 500 V.
C8		Condenser, P.T., .02 uf, 400 V.
C9A,C9B,C9C	N24025	Condenser, Electrolytic, 80-30 uf, 150 V. 20 uf, 25 V.

SCHEMATIC LOCATION	PART NO.	DESCRIPTION
	N19132	Cord Dial Drive
CP	N24084	Couplate, Centralab YA 401-002A
FP	N24103	Filpec, Centralab YA 105-048
R1		Resistor, 22K ohms, $\frac{3}{4}$ W
R2		Resistor, 330K ohms, $\frac{1}{2}$ W
R3		Resistor, 47 ohms, $\frac{1}{4}$ W
R4		Resistor, 2.2 megohms, $\frac{1}{4}$ W
R5		Resistor, 6.8 K ohms, $\frac{1}{4}$ W
R6		Resistor, 100 K ohms, $\frac{1}{4}$ W
R7	N24026	Resistor, 1 megohm, Volume Control
R8		Resistor, 6.8 megohm, $\frac{1}{4}$ W
R9		Resistor, 15 ohm, $\frac{1}{4}$ W
R10		Resistor, 120 ohm, $\frac{1}{4}$ W
R11		Resistor, 1200 ohm, 1 W
SPK	N24022	Speaker, 4" P.M.
	N20381	Spring, Dial Cord
T1	N21797-8	Transformer, I.F.
T2	N24021-1	Transformer, Output

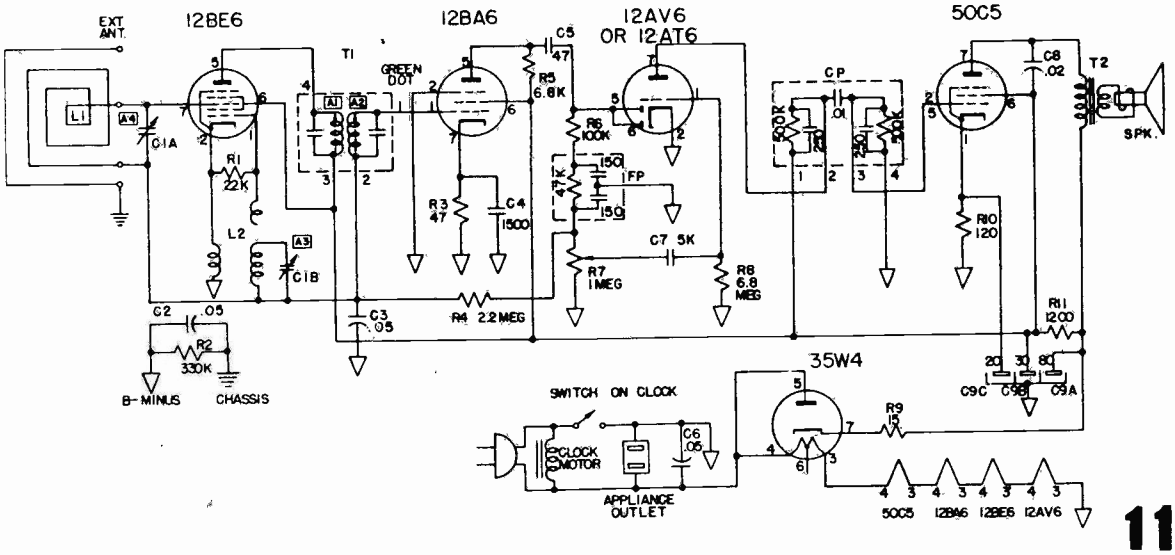

Sears, Roebuck & Co. Sets Nos. 5 and 6, Chassis 132.881.

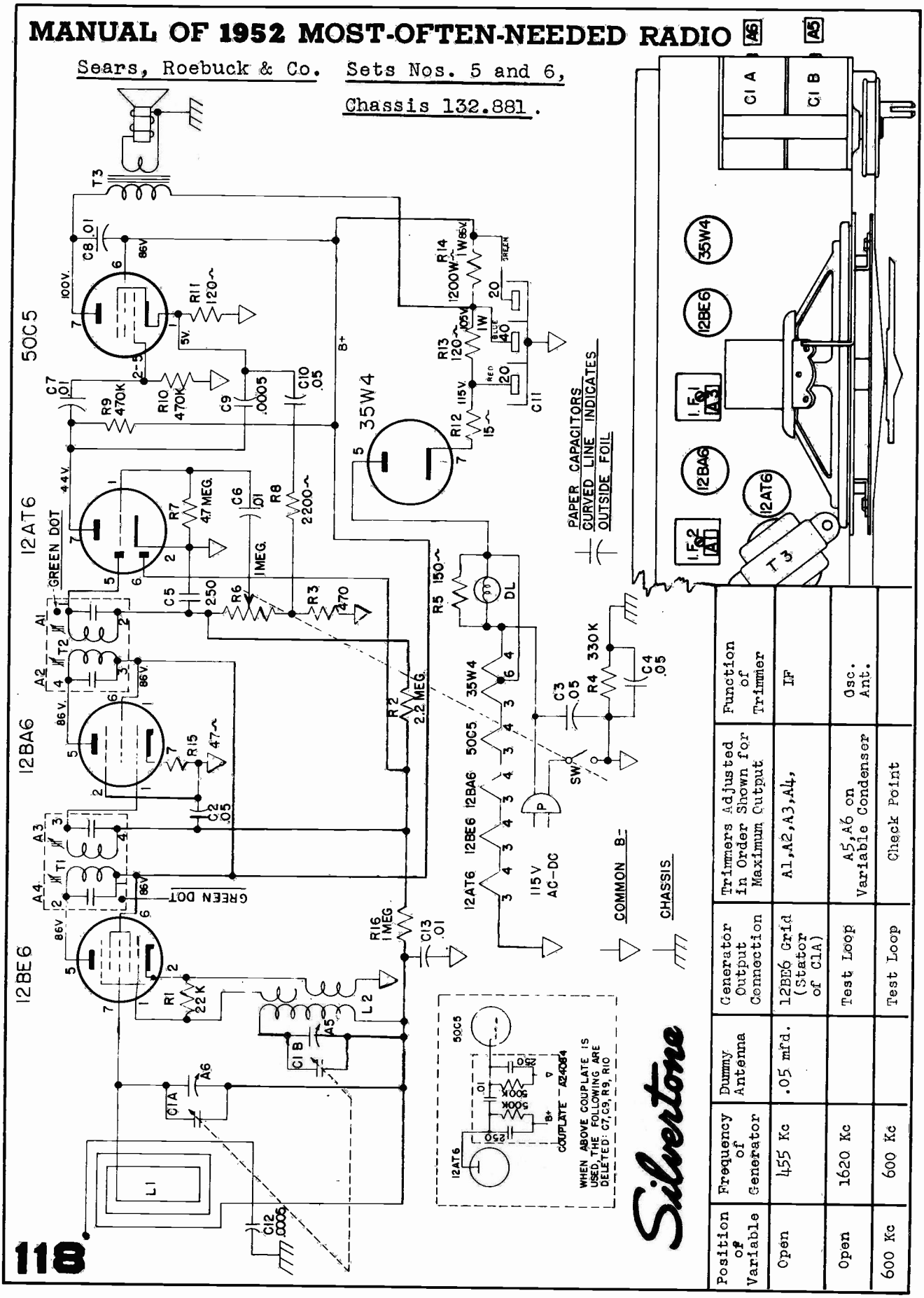

Position of Variable	Frequency of Generator	Dummy Antenna	Generator Output Connection	Trimmers Adjusted in Order Shown for Maximum Output	Function of Trimmer
Open	455 Kc	.05 mfd.	12BE6 Grid (Stator of C1A)	A1, A2, A3, A4,	IF
Open	1620 Kc		Test Loop	A5, A6 on Variable Condenser	Osc. Ant.
600 Kc	600 Kc		Test Loop	Check Point	

Silvertone

Sears, Roebuck & Co.
Set No. 1017
Chassis 528.210

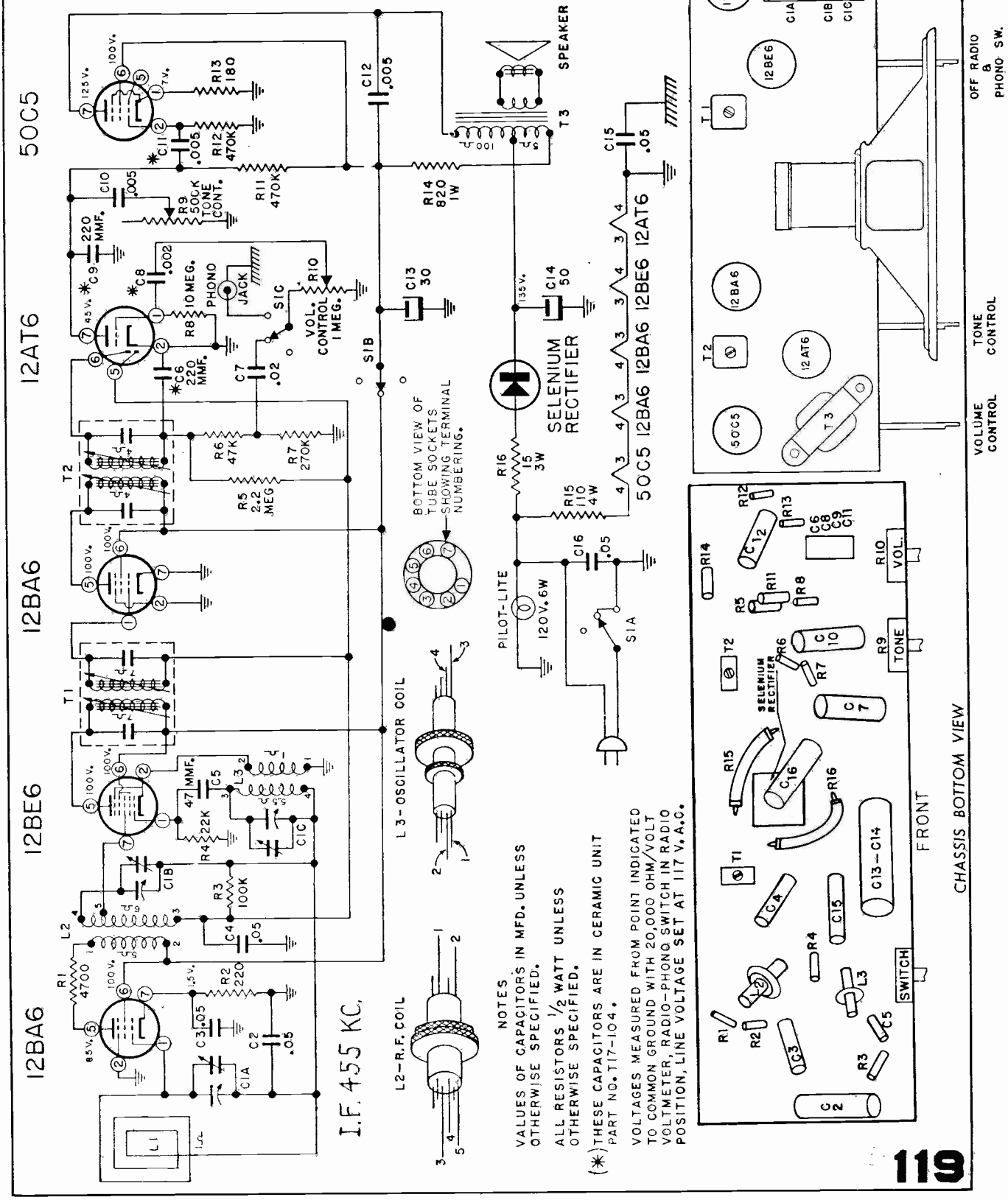

MANUAL OF 1952 MOST-OFTEN-NEEDED RADIO DIAGRAMS

Sears, Roebuck & Co. Sets Nos. 25 and 27

Chassis 478.238

7 TUBE AC-DC, AM-FM, SUPERHETERODYNE

Power Supply
105-125 V. D.C.
or 105-125 V., 50-60 cycles A.C.

Frequency Range
AM—530 Kc. to 1630 Kc.
FM— 87 Mc. to 109 Mc.

Intermediate Frequency
AM—455 Kc.
FM—10.7 Mc.

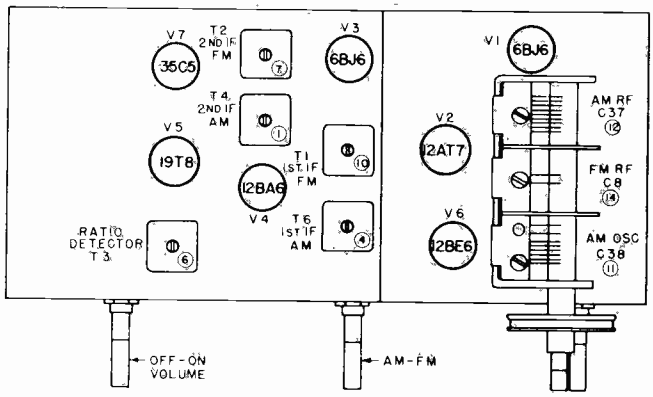

TOP VIEW OF CHASSIS

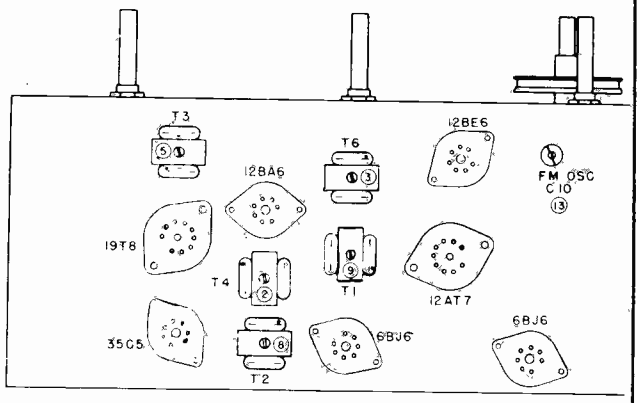

BOTTOM VIEW OF CHASSIS

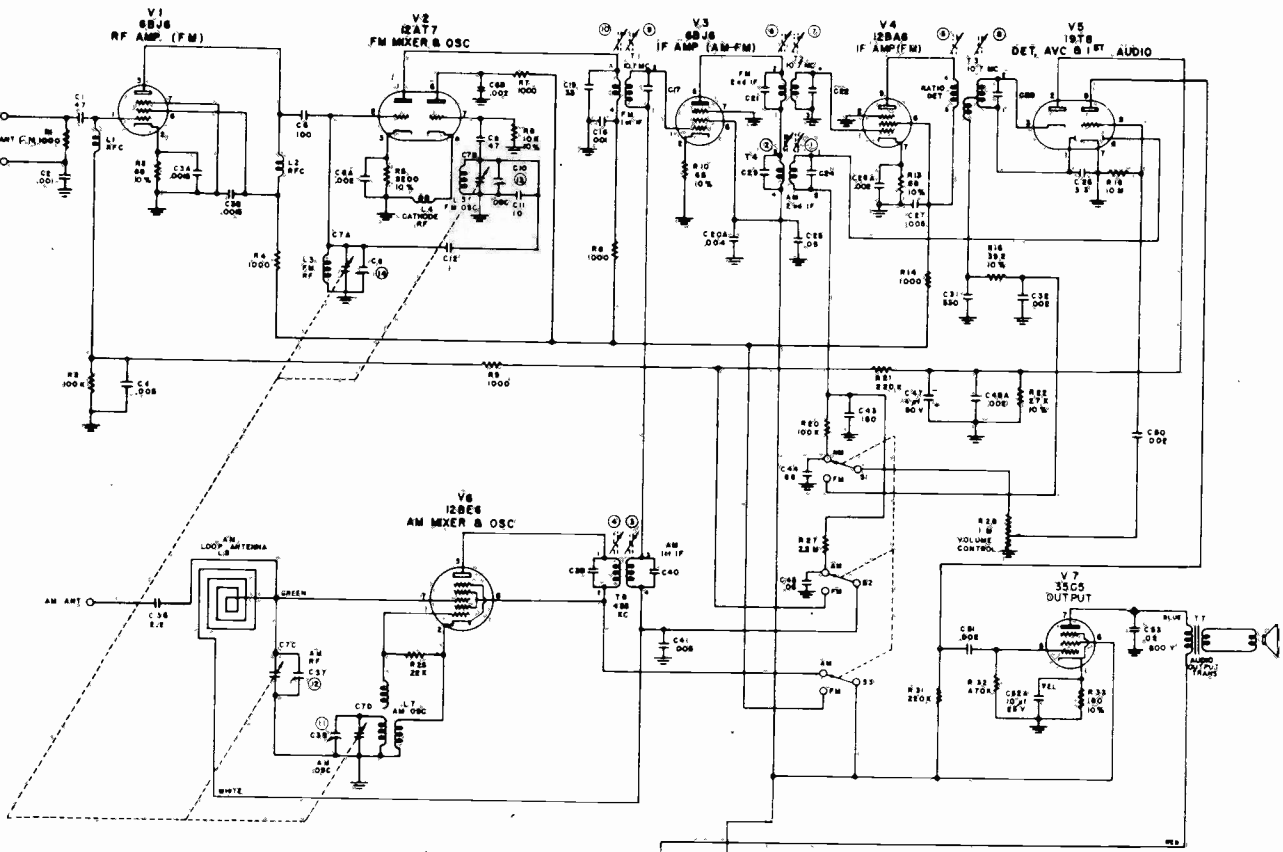

UNLESS OTHERWISE NOTED RESISTORS ARE CARBON, 1/2-WATT, 20% CONDENSER DECIMAL VALUES ARE IN μf, 500 VOLTS, WHOLE NUMBERS IN μμf 400 VOLTS

(M) = MOLDED PAPER, K = 1000 M = 1,000,000

(*) = ALIGNMENT ADJUSTMENTS

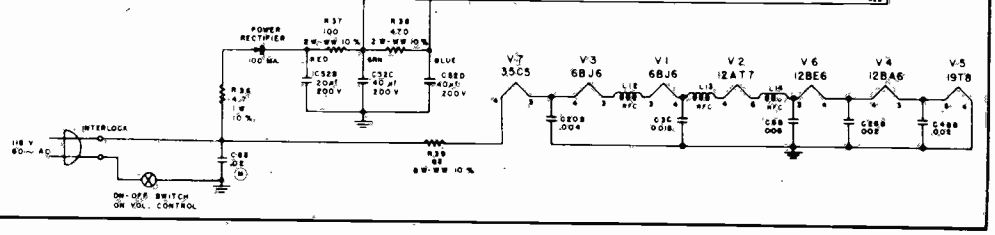

MANUAL OF 1952 MOST-OFTEN-NEEDED RADIO DIAGRAMS

Sears, Roebuck Sets 1032, 1035, and 1035-A, Chassis 528.195, -1, 528.196. Sets 1040 and 1045, Chassis 528.194 uses the same circuit + pilot light, but has a different chassis layout.

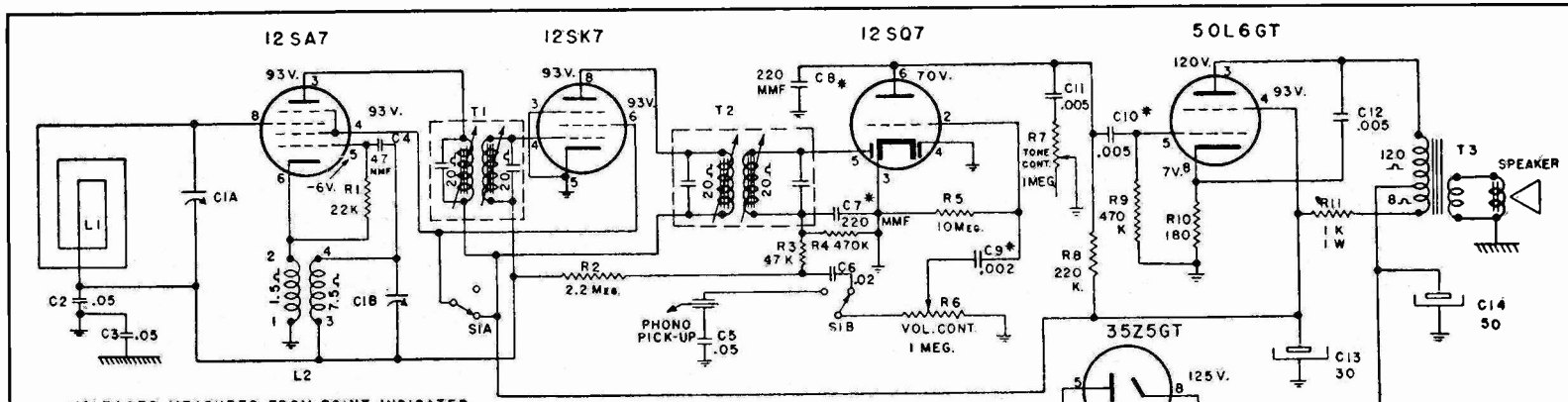

VOLTAGES MEASURED FROM POINT INDICATED TO COMMON GROUND WITH 20,000 OHM/VOLT VOLTMETER, RADIO-PHONO SWITCH IN RADIO POSITION, LINE VOLTAGE SET AT 117 V. AC.

* THESE CAPACITORS ARE IN CERAMIC UNIT PART NO. T17-104.

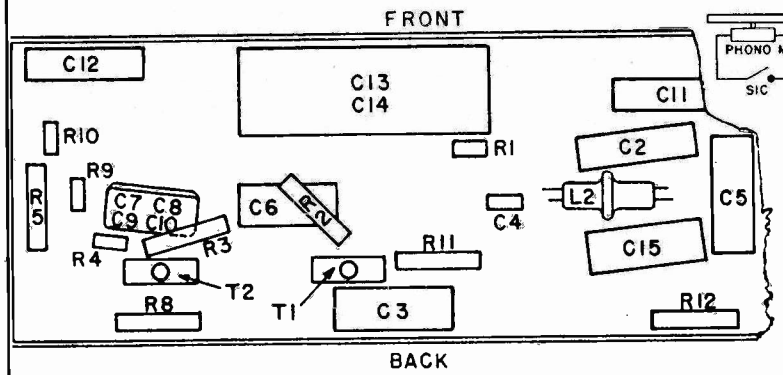

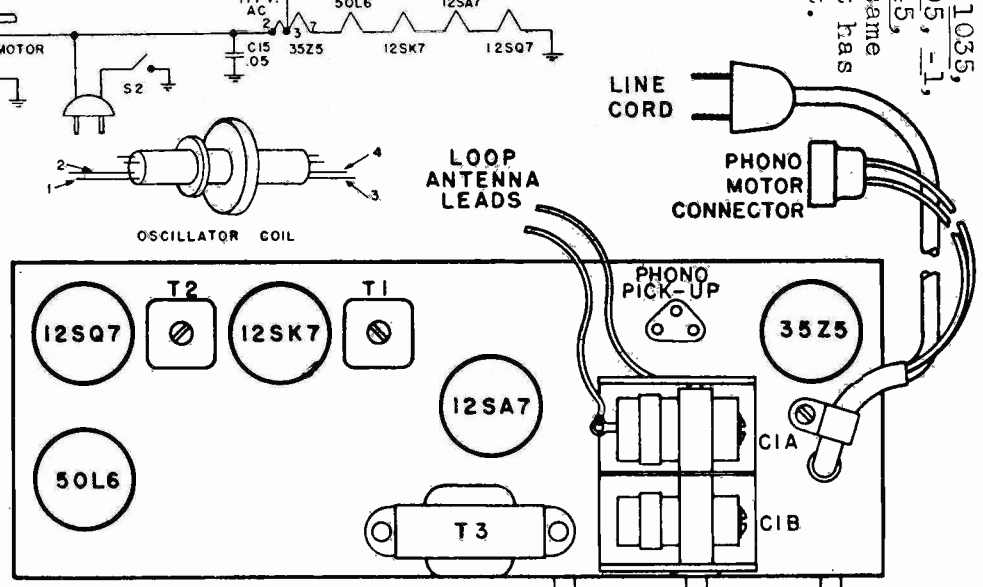

ALIGNMENT PROCEDURE

Output meter reading to indicate 0.05 watt across voice coil . . . 0.4 volt

Generator ground lead connection . . . . . common ground

Generator modulation . . . . . 30%, 400 cycles

Position of Volume Control . . . . . Fully on

POSITION OF TUNER	GENERATOR FREQUENCY	DUMMY ANTENNA	GENERATOR CONNECTION	TRIMMER ADJUSTMENT	TRIMMER FUNCTION
Open	455 KC	.1 mfd.	Pin 8 12SA7	T1 and T2 top & bottom	I.F.
Open	1630 KC	.1 mfd.	Pin 8 12SA7	C1B	Oscillator
1400 KC	1400 KC	HAZELTINE LOOP		C1A	Antenna

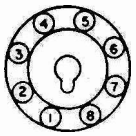

BOTTOM VIEW OF TUBE SOCKETS SHOWING TERMINAL NUMBERING.

VALUES OF CAPACITORS IN MFD. UNLESS OTHERWISE SPECIFIED.

ALL RESISTORS 1/2 WATT UNLESS OTHERWISE SPECIFIED.

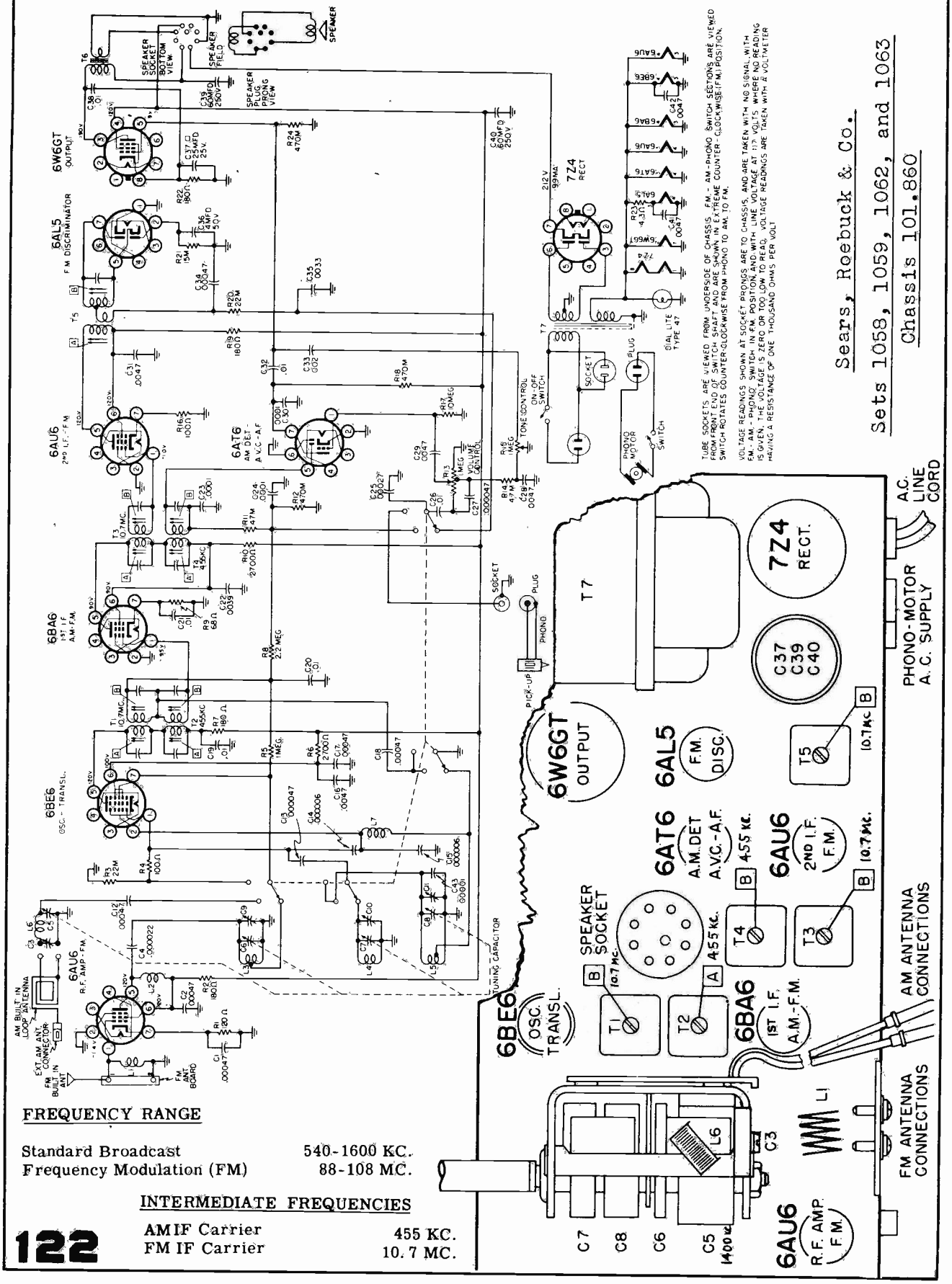

FREQUENCY RANGE

Standard Broadcast	540-1600 KC.
Frequency Modulation (FM)	88-108 MC.

INTERMEDIATE FREQUENCIES

AM IF Carrier	455 KC.
FM IF Carrier	10.7 MC.

Sentinel Radio

MODELS 338-W, 338-I, 338-R, 1U338-W, 1U338-I, 1U338-R,

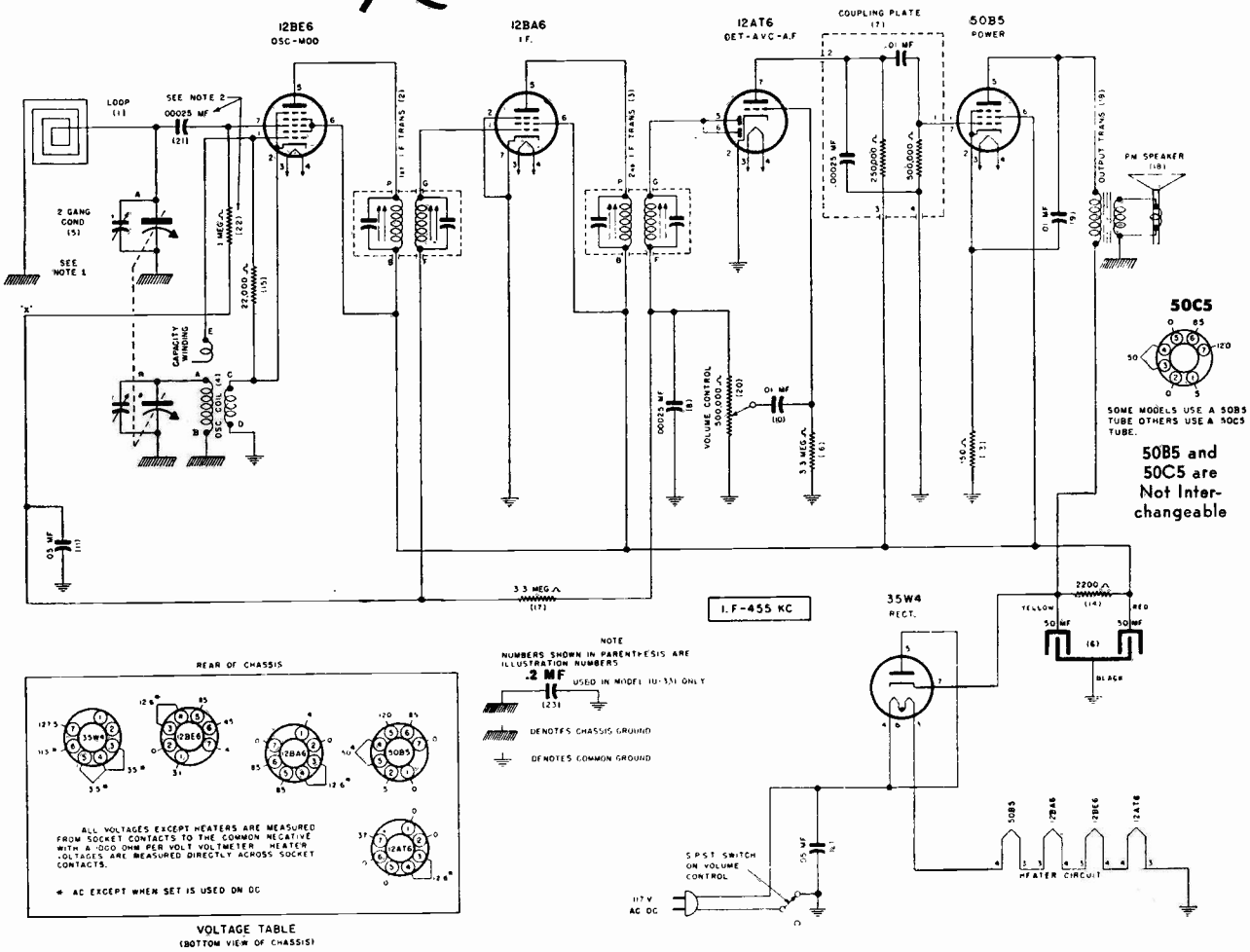

NOTE 1: Connected as shown in Model 1U338 only. Loop return connected to A.V.C. at point X in Model 338.

NOTE 2: Items with illustration numbers (21) and (22) used in 1U338 only. Loop and gang connected directly to pin #7 on 12BE6 in Model 338.

TO SERVICE TUBES, it is necessary to remove the cabinet back by gently pulling out the two trimount studs, used to hold the back to the cabinet, and detaching the two leads from the loop.

Before remounting the back on the cabinet, be sure to properly reconnect these leads. The green-white wire must be attached to the terminal which has the word "GREEN" printed close to it.

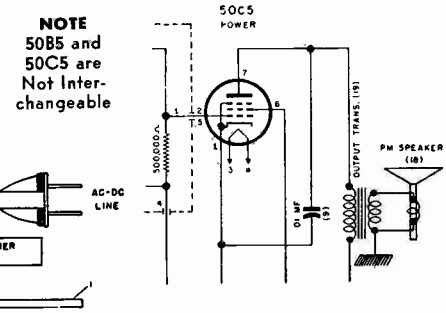

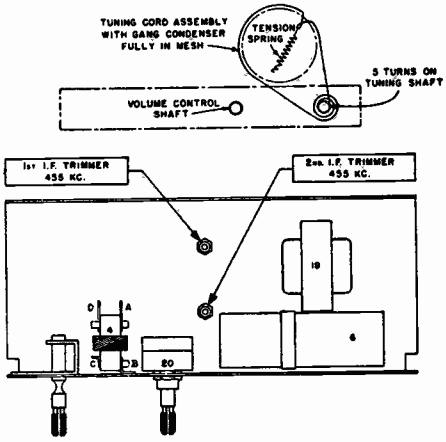

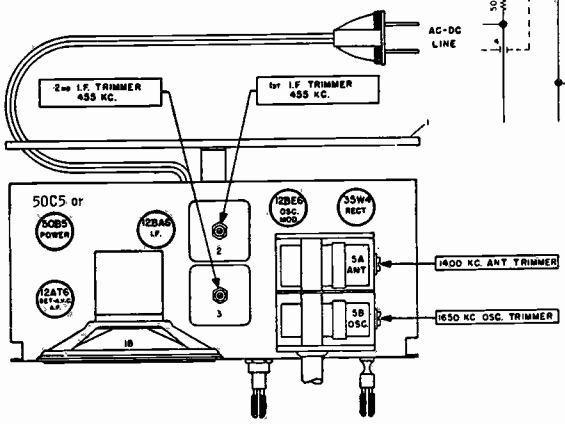

STEWART-WARNER

CLOCK - RADIO MODELS 9162-A & 9162-B & 9164-A & 9164-B

The circuit shown is exact for 9162 sets, while 9164 sets are identical except for appliance receptacle which is not used.

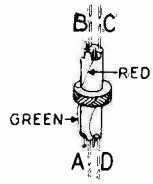

OSC. COIL 509832

Lettered terminals in illustration correspond to similarly lettered terminals on the circuit diagram.

Stringing of drive cord can be greatly facilitated if removal of the clock is undertaken. To string drive cord, turn the gang condenser drum to maximum counter-clockwise position and use the following parts:

505161 Tension spring
117057 Cord (2½ ft.)
119087 Ring
114955 Clip

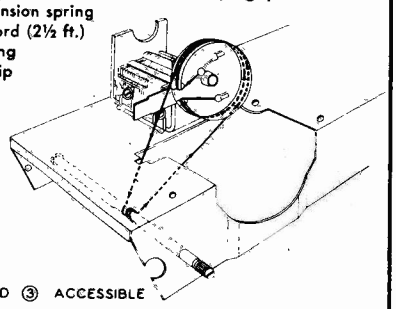

SLUGS ② AND ③ ACCESSIBLE FROM BOTTOM OF TRANSFORMERS.

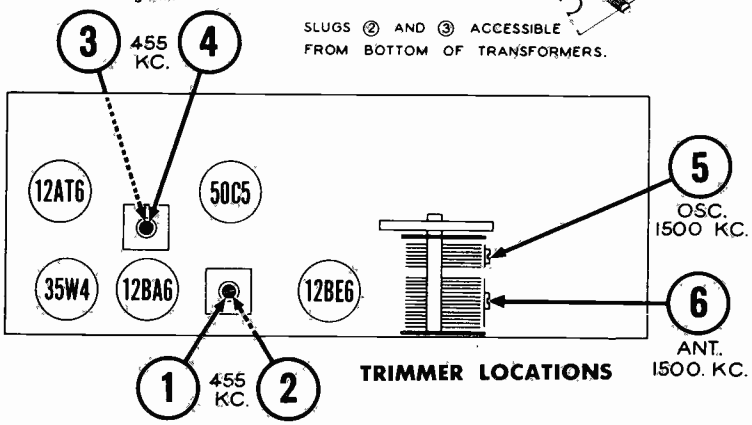

TRIMMER LOCATIONS

SOCKET VOLTAGES

1. All measurements made with a voltmeter having a sensitivity of 20,000 ohms per volt except where indicated by (*). The (*) symbol designates a vacuum tube voltmeter measurement.
2. Dial tuned to maximum counter-clockwise position.

BOTTOM VIEW OF CHASSIS

117 VOLT 60 CYCLE A.C. POWER SUPPLY USED FOR THESE MEASUREMENTS.

ALL VOLTAGES MEASURED BETWEEN SOCKET TERMINALS AND B- LUG UNLESS OTHERWISE INDICATED.

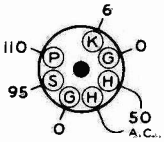

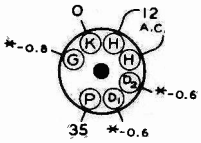

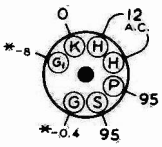

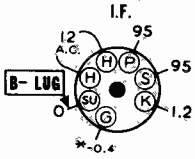

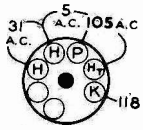

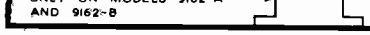

REAR OF CHASSIS

MANUAL OF 1952 MOST-OFTEN-NEEDED RADIO DIAGRAMS

STEWART-WARNER MODELS 9160-A, 9160-B, 9160-C, 9160-D & 9160-E

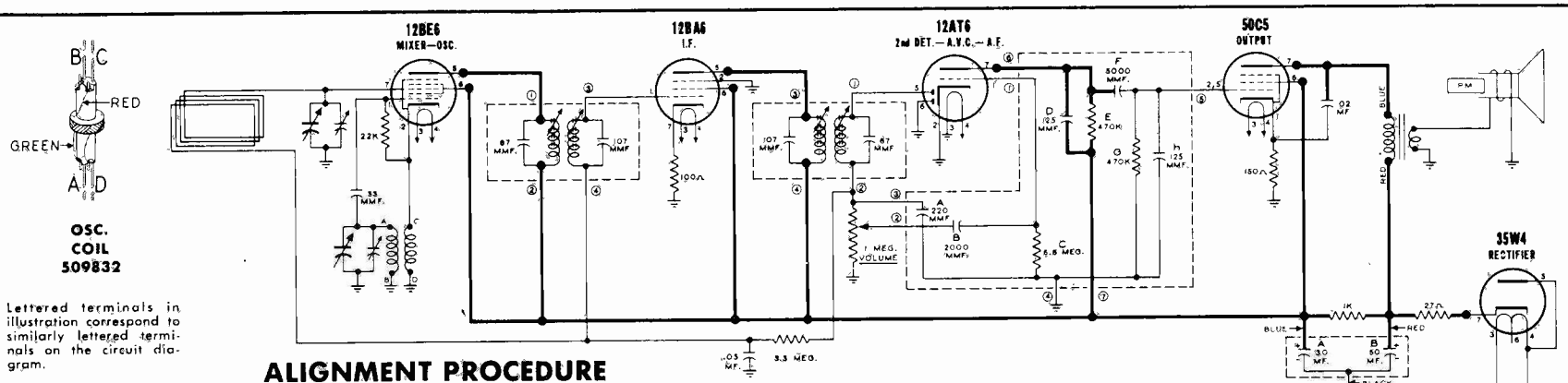

Lettered terminals in illustration correspond to similarly lettered terminals on the circuit diagram.

ALIGNMENT PROCEDURE

I.F. 455 KC.

SIGNAL GENERATOR CONNECTION	SIGNAL GENERATOR FREQUENCY	RECEIVER DIAL SETTING	TRIMMER AND SLUG NUMBER	TRIMMER AND SLUG DESCRIPTION	TYPE OF ADJUSTMENT
Connect directly to coupling turn as described in step 2 above.	455 KC 400 cycle Modulation	Any point where it does not affect the signal.	1-2	2nd I.F.	Adjust for maximum output. Then repeat adjustment.
			3-4	1st I.F.	
Connect directly to coupling turn as described in step 2 above.	1500 KC 400 cycle Modulation	1500 KC	5	Broadcast Oscillator	Adjust for maximum output.
Connect directly to coupling turn as described in step 2 above.	1500 KC 400 cycle Modulation	Tune to 1500 KC generator signal	6	Broadcast Antenna	Adjust for maximum output.

SLUGS ② AND ③ ACCESSIBLE FROM BOTTOM OF TRANSFORMERS.

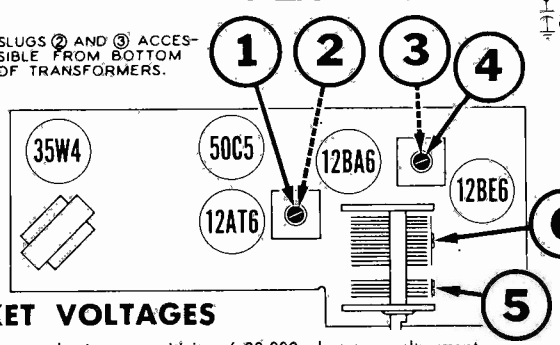

1. During the alignment of this receiver, the Tuning and Pointer knob will have to be set to a specific frequency. Since the dial scale is an integral part of the cabinet, the receiver chassis must be in the cabinet for correct positioning of the gang condenser and pointer. Before removing chassis from cabinet it will first be necessary to take off Volume Control knob, to pry off the two retaining clips at top of cabinet back and to remove the two chassis mounting screws which are accessible through slot openings at each side of cabinet back. (NOTE: Do not disturb the two externally mounted screws at bottom of cabinet back; these screws serve to mount loop and back to chassis frame.) Then turn the Tuning and Pointer knob to the desired position for alignment and, taking care not to change this setting, pull Tuning and Pointer knob from gang condenser shaft. Now chassis can be withdrawn from cabinet without disturbing position of condenser.
2. Couple the signal generator to the receiver by connecting its output to several turns of wire formed in a circular shape so that it may be placed adjacent and parallel to the receiver loop antenna.
3. Connect an output meter across the speaker voice coil or from the plate of the 50C5 tube to chassis through a 0.1 Mfd. condenser.
4. Set volume control at maximum volume position and use a weak signal from the signal generator.

SOCKET VOLTAGES

1. All measurements made with a voltmeter having a sensitivity of 20,000 ohms per volt except where indicated by (*). The (*) symbol designates a vacuum tube voltmeter measurement.
2. Dial tuned to maximum counter-clockwise position.

ALL VOLTAGES MEASURED BETWEEN SOCKET TERMINALS AND CHASSIS UNLESS OTHERWISE INDICATED. 117 VOLT 60 CYCLE A.C. POWER SUPPLY USED FOR THESE MEASUREMENTS.

BOTTOM VIEW OF CHASSIS

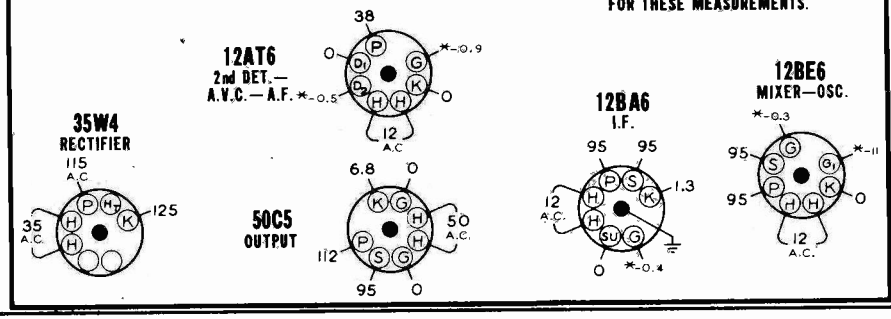

MANUAL OF 1952 MOST-OFTEN-NEEDED RADIO DIAGRAMS

STEWART-WARNER MODELS 9161-A, 9161-B, 9161-C

126

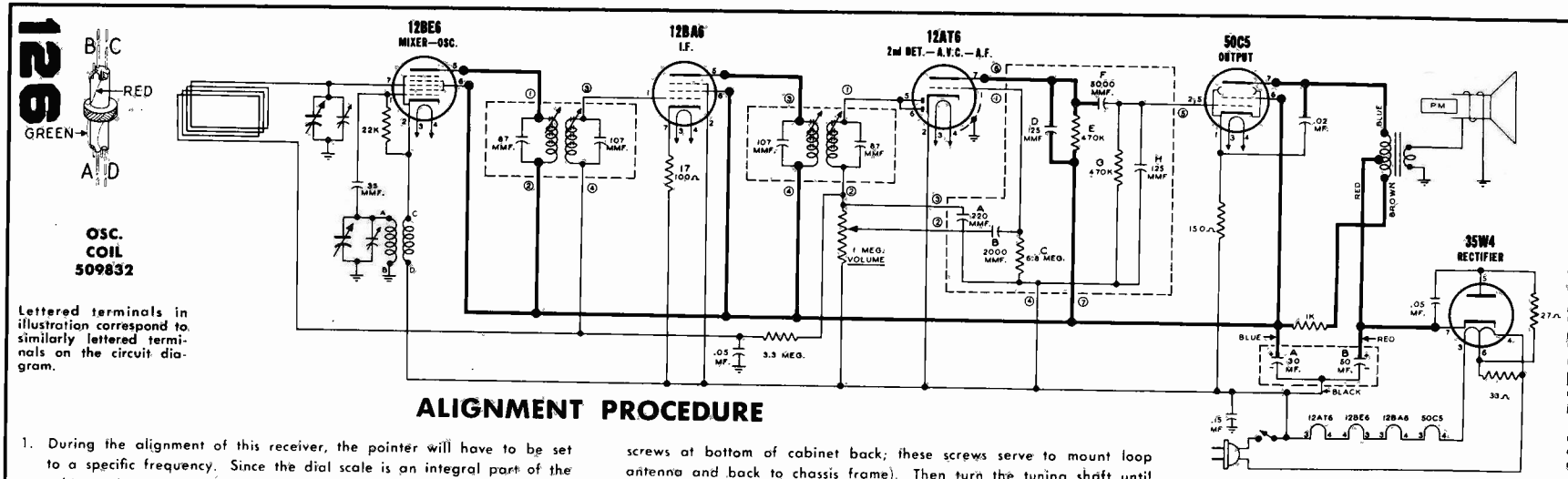

Lettered terminals in illustration correspond to similarly lettered terminals on the circuit diagram.

ALIGNMENT PROCEDURE

1. During the alignment of this receiver, the pointer will have to be set to a specific frequency. Since the dial scale is an integral part of the cabinet, the receiver chassis must be in the cabinet for correct positioning of the gang condenser and pointer.

   Before setting the pointer to the desired frequency, it will be necessary to check the position of pointer with respect to the gang condenser. To accomplish this, rotate tuning knob fully counter-clockwise until gang condenser is fully meshed. With gang in this position, pointer should be directly over the third dot or depression located on the first left hand vertical bar of the speaker grill.

   If the pointer is not properly positioned, hold the Tuning Knob steady and move the pointer manually to the proper place.

2. Before removing chassis from cabinet, it will be necessary to take off the Volume Control knob and Tuning knob, to pry off the two retaining clips at top of cabinet back and to remove the two chassis mounting screws which are accessible through openings at bottom corners of cabinet back. (NOTE: Do not disturb the two externally mounted screws at bottom of cabinet back; these screws serve to mount loop antenna and back to chassis frame). Then turn the tuning shaft until pointer is set to desired frequency for alignment and taking care not to change this setting, withdraw chassis from cabinet. The cabinet grill will hold the pointer, allowing it to be pulled from its shaft as chassis is withdrawn.

3. Couple the signal generator to the receiver by connecting its output to several turns of wire formed in a circular shape so that it may be placed adjacent and parallel to the receiver loop antenna.

4. Connect an output meter across the speaker voice coil or from the plate of the 50C5 tube to B− through a 0.1 Mfd. condenser.

5. Set volume control at maximum volume position and use a weak signal from the signal generator.

6. After alignment has been completed and chassis reassembled in cabinet and pointer properly positioned, check calibration over entire dial and should the calibration error be objectionable, repeat procedure, exercising greater precaution in the initial setting of the pointer.

DUMMY ANT. IN SERIES WITH SIGNAL GENERATOR	SIGNAL GENERATOR CONNECTION	SIGNAL GENERATOR FREQUENCY	RECEIVER DIAL SETTING	TRIMMER AND SLUG NUMBER	TRIMMER AND SLUG DESCRIPTION	TYPE OF ADJUSTMENT
NONE	Connect directly to coupling turn as described in step 2 above.	**455 KC** 400 cycle Modulation	Any point where it does not affect the signal.	**1-2**	2nd I.F.	Adjust for maximum output. Then repeat adjustment.
				3-4	1st I.F.	
NONE	Connect directly to coupling turn as described in step 2 above.	**1500 KC** 400 cycle Modulation	1500 KC	**5**	Broadcast Oscillator	Adjust for maximum output.
NONE	Connect directly to coupling turn as described in step 2 above.	**1500 KC** 400 cycle Modulation	Tune to 1500 KC generator signal	**6**	Broadcast Antenna	Adjust for maximum output.

POINTER REPLACEMENT

In order to replace the pointer, it will first be necessary to remove the chassis from the cabinet as outlined in step 2 in the Alignment Procedure.

A new pointer may now be installed by inserting it, from the rear of the cabinet, into the recess at the front base of cabinet.

POINTER AND DRIVE CORD ARRANGEMENT

To string dial cord, turn the gang condenser drum to maximum counter-clockwise position and position pointer drum as shown in illustration and use the following parts:

505161 Tension spring
117057 Cord (2½ ft.)
114955 Clip

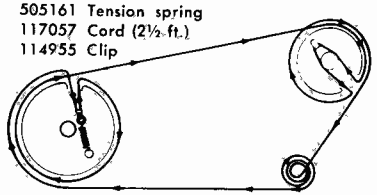

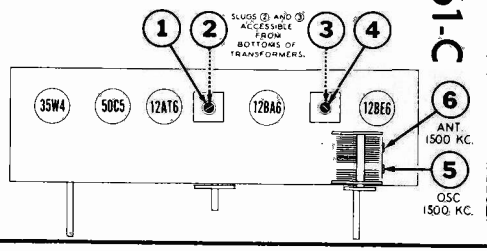

STROMBERG-CARLSON RADIO NO. C-1

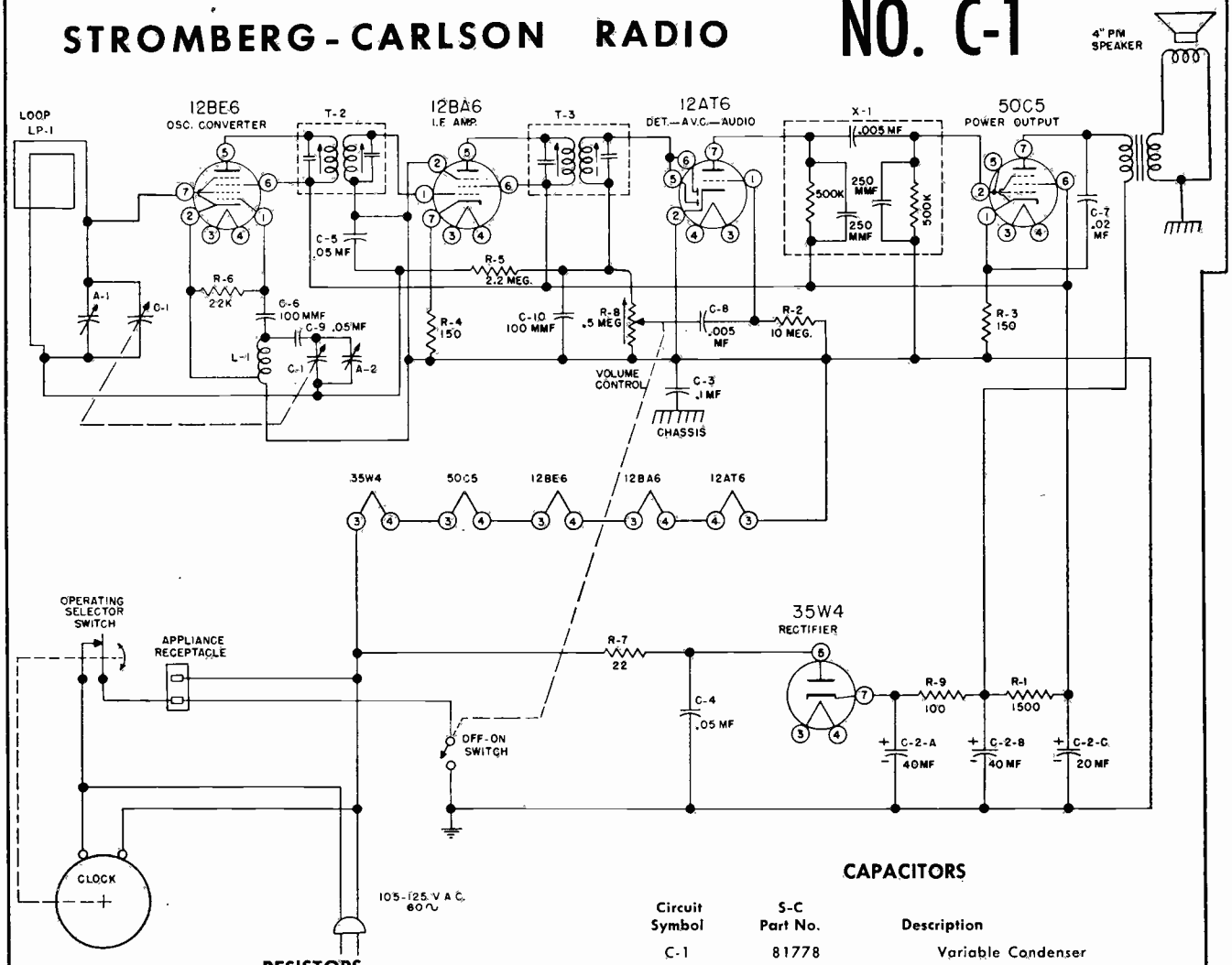

RESISTORS

Circuit Symbol	S-C Part No.	Description
R-1	149134	1500 ohms — 1 W — 20%
R-2	149125	10 megohms—½ W—20%
R-3	149096	150 ohms—½ W—20%
R-4	149096	150 ohms—½ W—20%
R-5	149121	2.2 megohms—½ W—20%
R-6	149109	22K ohms—½ W—20%
R-7	149091	22 ohms—½ W—20%
R-8	81780	.5 megohms—Potentiometer
R-9	149095	100 ohms—½ W—20%

CAPACITORS

Circuit Symbol	S-C Part No.	Description
C-1	81778	Variable Condenser
C-2	81779	40-40-20 MF—150 V Electro.
C-3	110724	.1 MF — 400 V
C-4	110801	.05 MF — 400 V
C-5	110801	.05 MF — 400 V
C-6	110291	100 MMF — 500 V
C-7	110542	.02 MF — 400 V
C-8	110805	.005 MF — 200 V
C-9	110801	.05 MF — 400 V
C-10	110291	100 MMF — 500 V

ALIGNMENT PROCEDURE

- Output meter across voice coil (3.2 ohm).
- Volume control at maximum for all adjustments.
- Align for maximum output. Reduce input as needed to keep output near 1.28 volts (0.5 watt).

SIGNAL GENERATOR				TUNER SETTING	ADJUST TRIMMERS TO MAXIMUM OUTPUT (in order shown)
Frequency	Coupling Capacitor	Connections to Receiver	Ground Connection		
455 kc	0.1 mfd.	12BE6 grid	B —	Rotor full open (Plates out of mesh)	Input and output slugs of IF cans
1650 kc	0.1 mfd.	12BE6 grid	B —	Rotor full mesh (Plates in mesh)	Oscillator trimmer A2
1500 kc		Radiating Loop		1500 kc	Antenna trimmer A1

VOCALINE COMPANY OF AMERICA

Standard Models CC-1 and CC-2

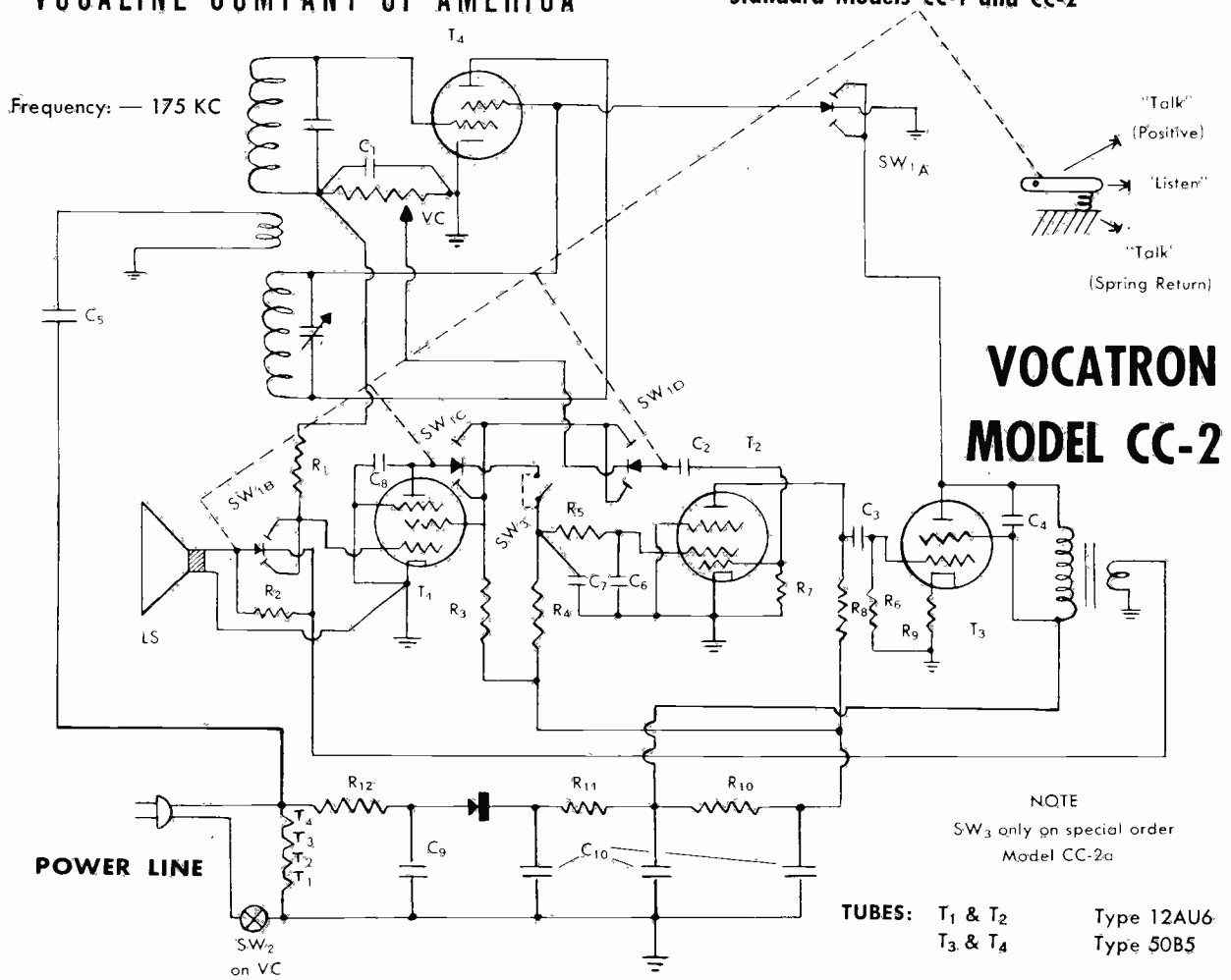

TUBES: T_1 & T_2 Type 12AU6
T_3 & T_4 Type 50B5

RESISTORS: (All ½ watt unless otherwise specified)

R_1	1 Megohm
R_2	3300 Ohms
R_3	22000 Ohms
R_4 R_5 R_6	470,000 Ohms
R_7	10 Megohms
R_8	270,000 Ohms
R_9	150 Ohms
R_{10}	2200 Ohms
R_{11}	470 Ohms (2 Watts)
R_{12}	82 Ohms (1 Watt)
R_{13}	150 Ohms

CAPACITORS: (400-Volts Rating, Paper Unless Otherwise Specified)

C_1	.0001 MFD MICA
C_2	.002 MFD
C_3 C_4	.01 MFD
C_5 C_6	.05 MFD
C_7	.1 MFD
C_8	.002 MFD
C_9	.25 MFD (600-Volt Paper)
C_{10}	40–40–40 (150-Volt Electrolytic)
C_{11}	.05 MFD

VOLUME CONTROL:

VC	500,000 Ohms with Spst Switch (S_2)

Model CC-2 differs from CC-1 principally in that it includes an additional tube and a special silencing circuit (as described generally above) for discriminating against noise disturbances on the power line while standing by. With no signal, and hence no rectified voltage appearing across the volume control, the plate of T_1 draws a large current, and the screen of T_2 is maintained near zero potential, so that the audio amplifier is inoperative. With the appearance of a signal from another station, and the consequent development of a DC potential across the volume control greater than approximately 3 volts, tube T_1 is cut off, and the screen of T_2 allowed to rise to its normal operating level (about 25 volts). Then with the set conditioned for transmitting, T_1 operates as a triode pre-amplifier stage, the speaker being connected directly to its grid. (This stage takes the place of the input transformer found in model CC-1).

SYLVANIA

Chassis 1-602-1
Models 541B, 541H, 541M, 542BR, 542CH, 542GR, 542RE, 542YE

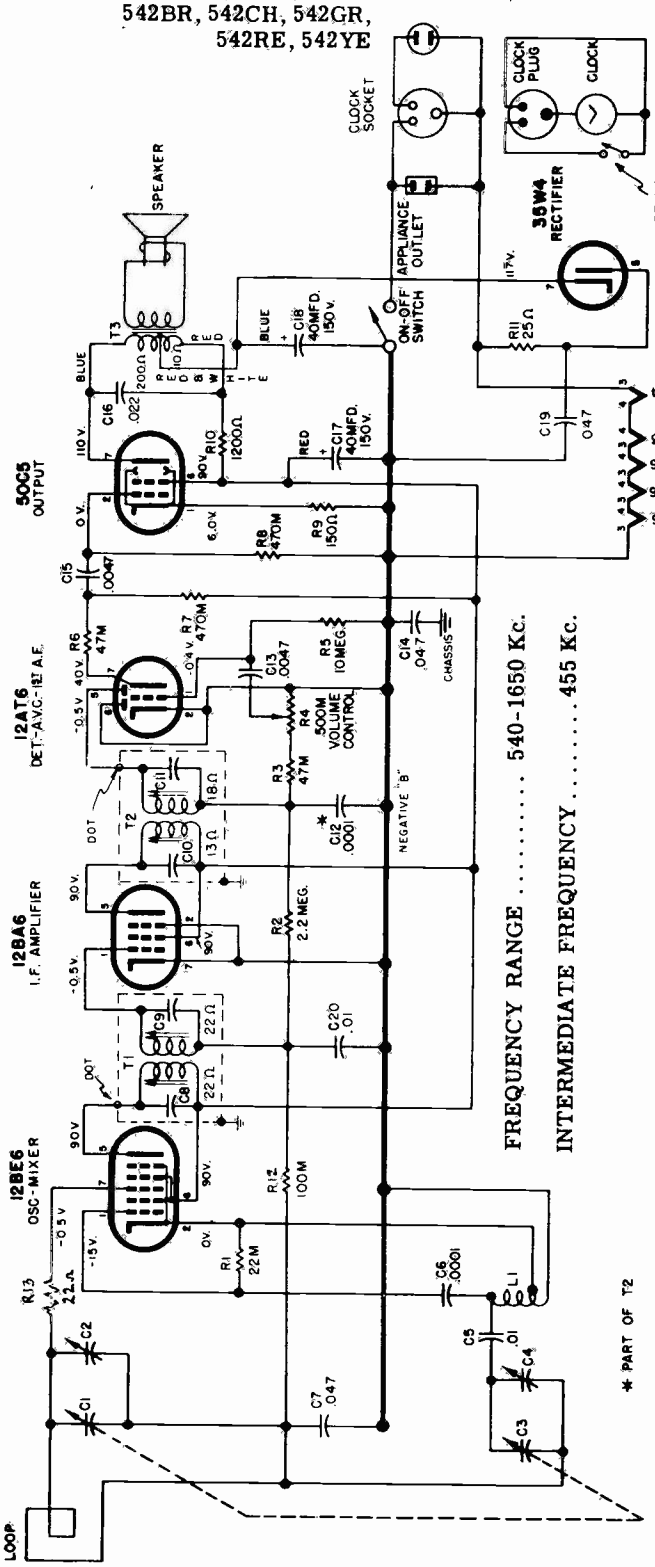

FREQUENCY RANGE ..... 540-1650 Kc.

INTERMEDIATE FREQUENCY ..... 455 Kc.

EARLIER SETS OMIT C20, AND HAVE C19 CONNECT TO OTHER SIDE OF R11.

* PART OF T2

VOLTAGES MEASURED WITH 20,000 OHM PER VOLT TYPE METER, TO NEGATIVE "B".
LINE POTENTIAL 117 VOLTS 60 CYCLE NO SIGNAL INPUT.
COIL RESISTANCES ARE AVERAGE VALUES.
INTERMEDIATE FREQUENCY 455 KC.

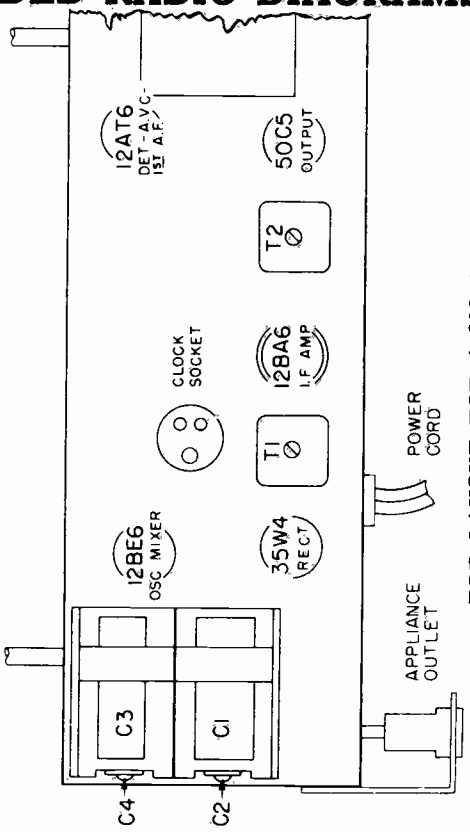

TOP LAYOUT FOR 1-602-1 CHASSIS

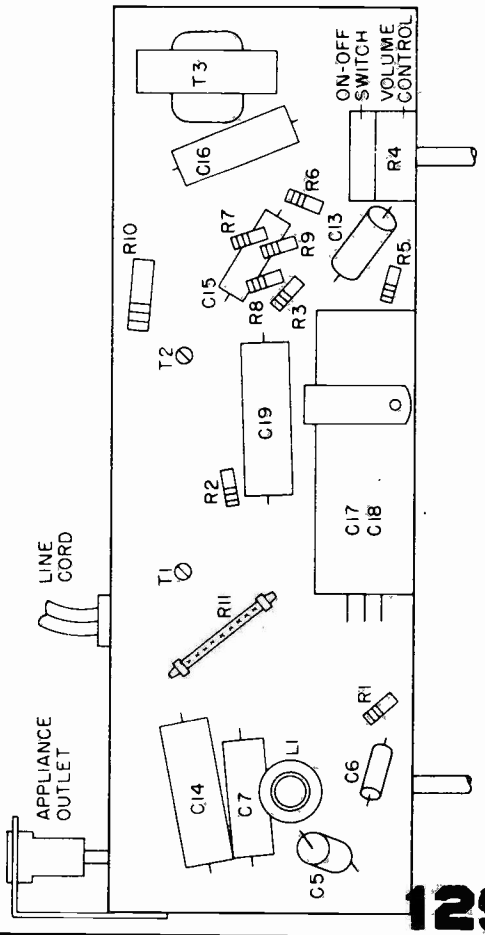

BOTTOM LAYOUT FOR 1-602-1 CHASSIS

SYLVANIA

Chassis 1-601-1
Models 511B, 511H, 511M, 512BR, 512CH, 512GR, 512RE, 512YE

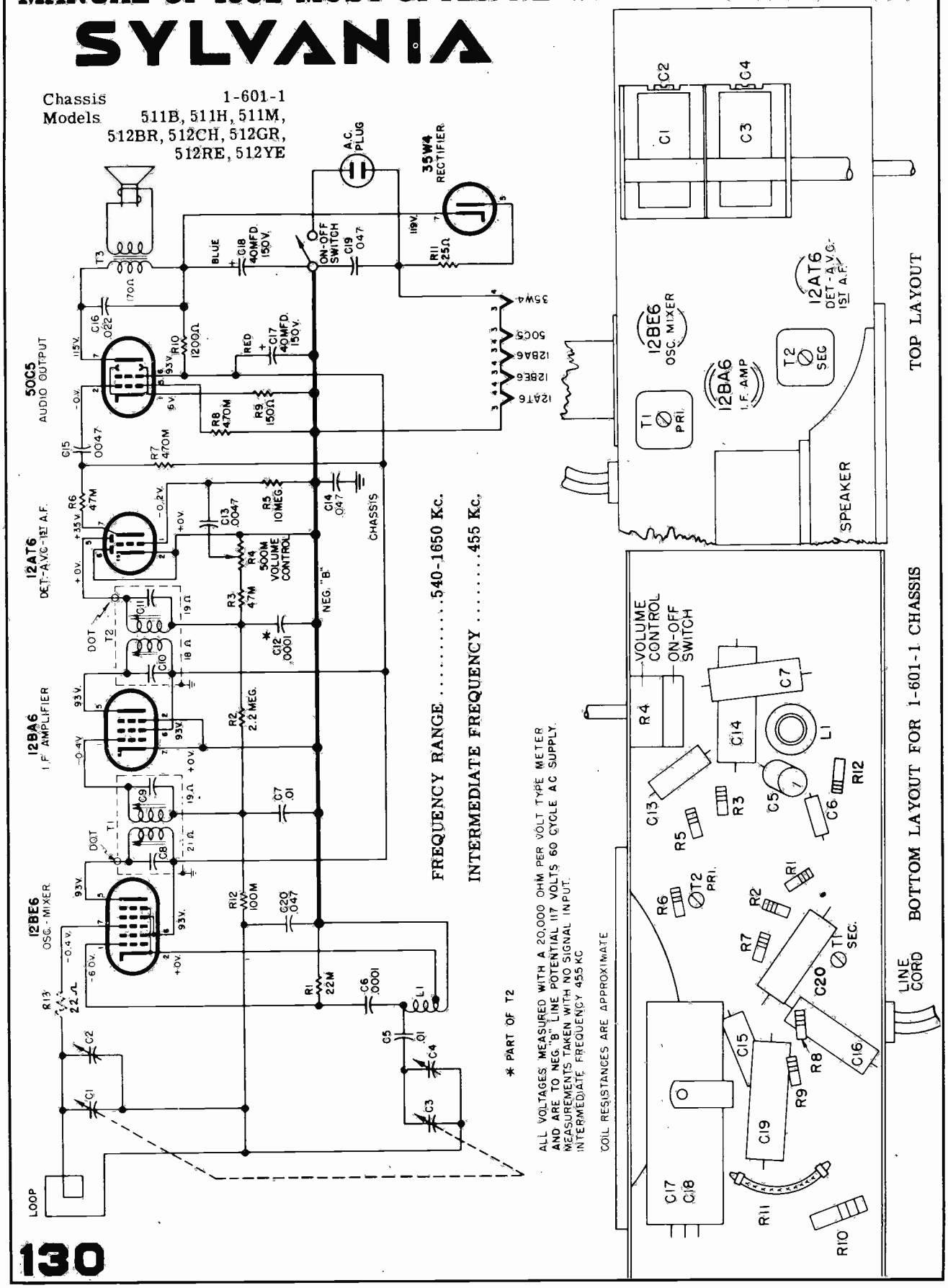

TELE-TONE RADIO CORPORATION

Chassis BL, used in Model 228

Except for mechanical differences, Chassis AH and AZ, used in Models 185, 190, 200, and 214, are similar to the chassis described on this page.

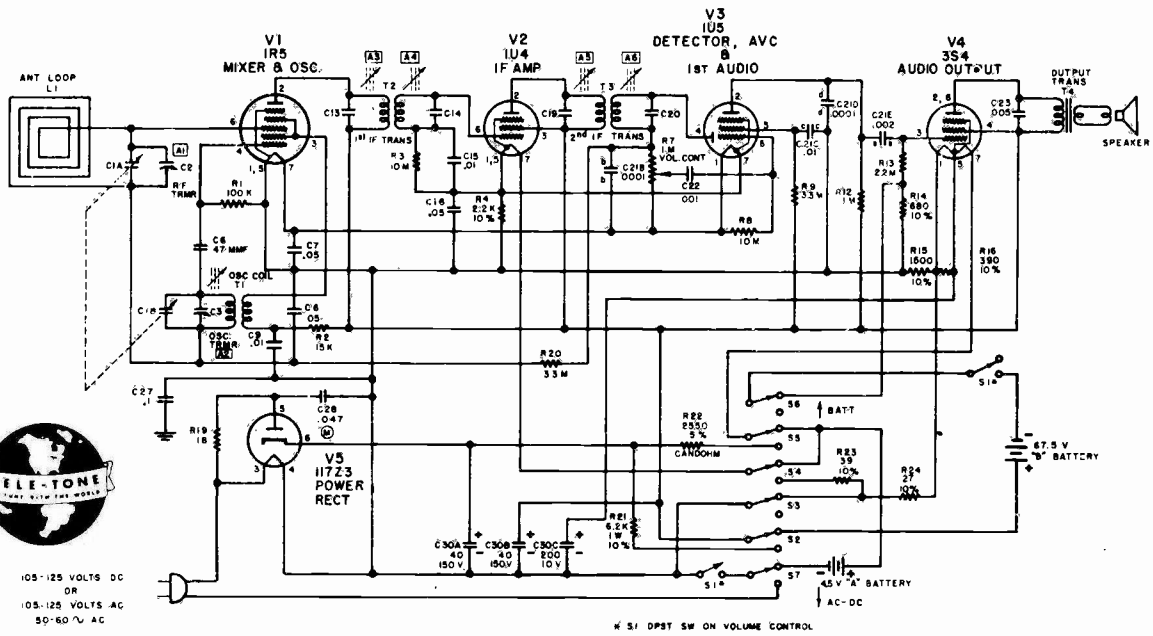

SCHEMATIC LOCATION	PART NO.	DESCRIPTION
		RESISTORS
R 1	RC 104-1	100,000 Ohms 1/2 Watt 20%
R 2	RC 153-1	15,000 Ohms 1/2 Watt 20%
R 3	RC 106-1	10 Megohms 1/2 Watt 20%
R 4	RC 222-2	2,200 Ohms 1/2 Watt 10%
R 7	VC 20	1 Megohm - Volume Control with DPST Switch
R 8	RC 106-1	10 Megohms 1/2 Watt 20%
R 9	RC 335-1	3.3 Megohms 1/2 Watt 20%
R 12	RC 105-1	1 Megohm 1/2 Watt 20%
R 13	RC 225-1	2.2 Megohms 1/2 Watt 20%
R 14	RC 681-2	680 Ohms 1/2 Watt 10%
R 15	RC 152-2	1,500 Ohms 1/2 Watt 10%
R 16	RC 391-2	390 Ohms 1/2 Watt 10%
R 19	RC 180-1	18 Ohms 1/2 Watt 20%
R 20	RC 335-1	3.3 Megohms 1/2 Watt 20%
R 21	RC 622-5	6,200 Ohms 1 Watt 10%
R 22	RP 5	2,550 Ohms 5% Candohm Resistor
R 23	RC 390-2	39 Ohms 1/2 Watt 10%
R 24	RC 270-2	27 Ohms 1/2 Watt 10%
		CONDENSERS
C 1A,1B	CV 15	Variable Condenser
C 2		RF Trimmer (Part of C 1A)
C 3		Oscillator Trimmer (Part of C 1B)
C 6	CM 470-1	47 Mmfd Mica
C 7	CP 503-2	.05 Mfd 150 Volts Paper
C 8	CP 503-2	.05 Mfd 150 Volts Paper
C 9	CP 103-2	.01 Mfd 150 Volts Paper
C 13,14		(Part of T 2)
C 15	CP 103-2	.01 Mfd 150 Volts Paper
C 16	CP 503-2	.05 Mfd 150 Volts Paper
C 19,20		(Part of T 3)
C 21B	CC 5-2	.0001 Mfd Ceramic Condenser Block
C 21C	CC 5-2	.01 Mfd Ceramic Condenser Block
C 21D	CC 5-2	.0001 Mfd Ceramic Condenser Block
C 21E	CC 5-2	.002 Mfd Ceramic Condenser Block
C 22	CP 102-3	.001 Mfd 200 Volts Paper
C 23	CP 502-2	.005 Mfd 400 Volts Paper
C 27	CP 104-1	.1 Mfd 200 Volts Paper
C 28	CPM 503-1	.047 Mfd 400 Volts Molded Paper
C 30A	CE 17	40 Mfd 150 Volts Electrolytic Condenser
C 30B	CE 17	40 Mfd 150 Volts Electrolytic Condenser
C 30C	CE 17	200 Mfd 10 Volts Electrolytic Condenser

NOTE:
ON SOME SETS, SECTIONS OF, OR THE ENTIRE CERAMIC BLOCK MAY BE REPLACED BY INDIVIDUAL CONDENSERS

UNLESS OTHERWISE NOTED, RESISTORS ARE CARBON, ½ WATT, ± 20%, ALL CAPACITANCE VALUES LESS THAN 1 ARE IN µf, ABOVE 1 IN µµf.

(M) = MOLDED PAPER
K = 1,000
M = 1,000,000
(A) = ALIGNMENT ADJUSTMENTS

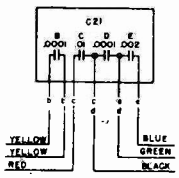

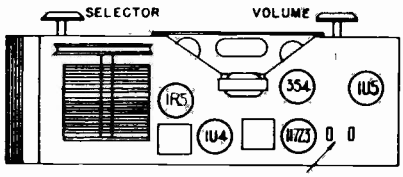

INSERT LINE CORD PLUG HERE FOR BATTERY-OPERATION

ALIGNMENT DATA
FREQ. RANGE 532.5 TO 1620 KC
ALIGN RF TRIMMER C2 AT 1400 KC
ALIGN OSC TRIMMER C3 AT 1620 KC
IF = 455 KC
TRACK AT 600 KC

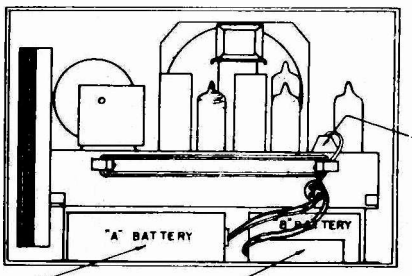

Line cord plug shown in position for battery operation, with line cord wrapped around line cord retainers

For A.C.-D.C. operation remove plug from chassis, unwrap cord and bring out of notch in side of cover

Insert two-prong plug into "A" BATTERY Make sure large pin engages large contact in battery. Excessive force is not required to push plug into battery.

Place "B" BATTERY so that contacts are toward bottom Snap fasteners onto battery.

MANUAL OF 1952 MOST-OFTEN-NEEDED RADIO DIAGRAMS

Tele-Tone

5 TUBE, AC-DC SUPERHETERODYNE RADIO RECEIVER

TELETONE MODEL NO. 230 — BO CHASSIS

Sears, Roebuck Sets Nos. 13 & 14, Chassis 478.259, are similar to this Tele-Tone model.

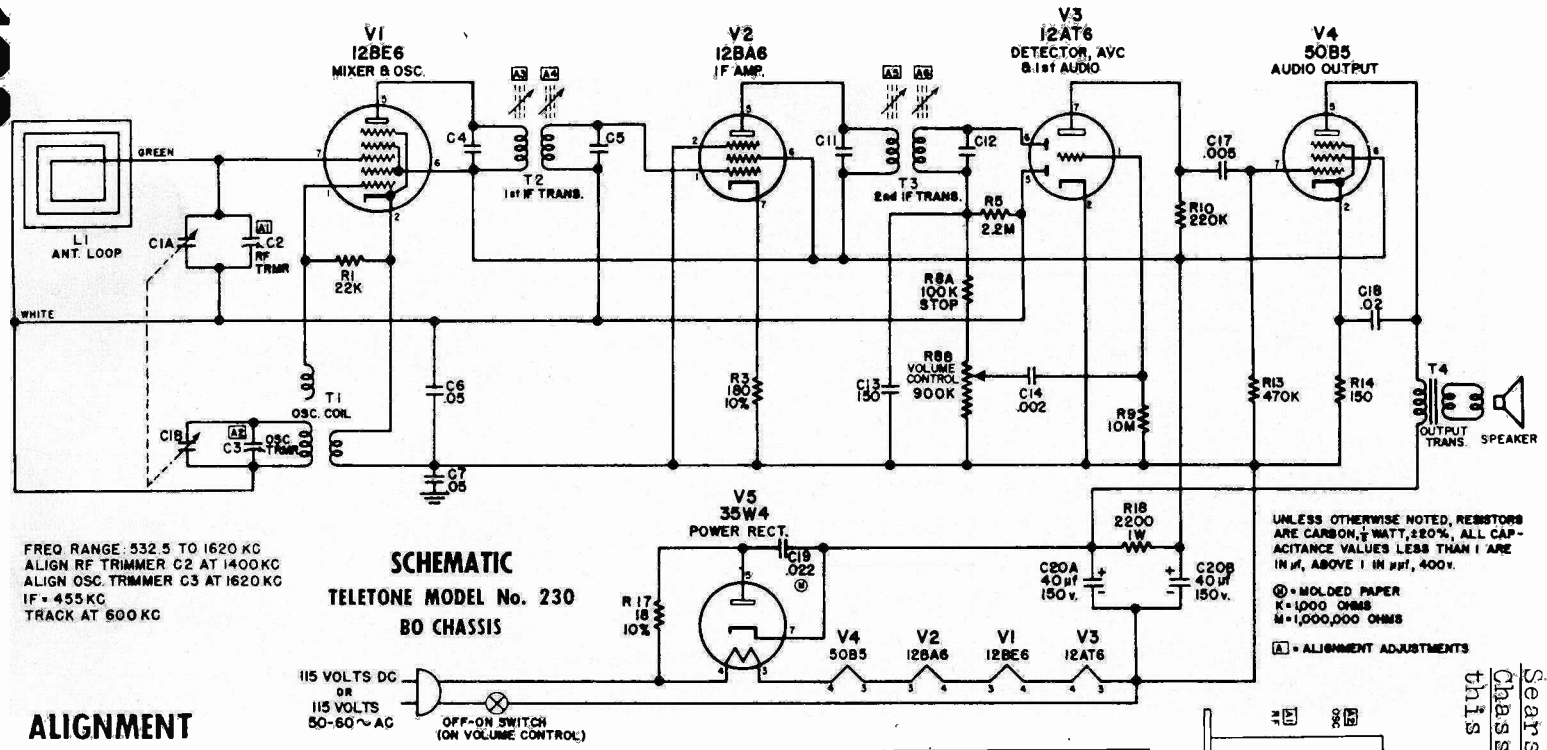

FREQ. RANGE: 532.5 TO 1620 KC
ALIGN RF TRIMMER C2 AT 1400 KC
ALIGN OSC. TRIMMER C3 AT 1620 KC
IF = 455 KC
TRACK AT 600 KC

SCHEMATIC

TELETONE MODEL No. 230

BO CHASSIS

UNLESS OTHERWISE NOTED, RESISTORS ARE CARBON, ½ WATT, ±20%, ALL CAPACITANCE VALUES LESS THAN 1 ARE IN µf, ABOVE 1 IN µµf, 400v.

Ⓜ = MOLDED PAPER
K = 1,000 OHMS
M = 1,000,000 OHMS

[A] = ALIGNMENT ADJUSTMENTS

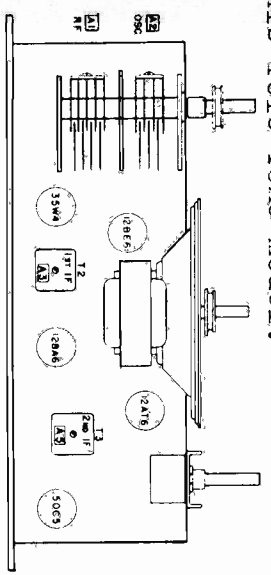

TOP VIEW OF CHASSIS

ALIGNMENT

	Position of Variable	SIGNAL GENERATOR				Trimmer Adjustments (in order shown) for maximum output
		Frequency	Dummy Antenna	Connection to Receiver	Ground Connection	
IF	Rotor full open (plates out of mesh)	455 Kc	.05 Mfd.	Grid of 12BE6 (pin 7)	Chassis	Input & output trimmers on IF cans [A3] [A4] [A5] [A6]
RF	Rotor full open (plates out of mesh)	1620 Kc		*Test Loop	*Test Loop	Oscillator Trimmer [A2]
	1400 Kc	1400 Kc		*Test Loop	*Test Loop	Antenna Trimmer [A1]
	600 Kc	600 Kc		*Test Loop	*Test Loop	(Check Point)**

*Connect generator lead to Hazeltine Test Loop, Model 1150, placed two feet from the set loop, or three turns of wire about six inches in diameter, placed about one foot from the set loop.

**With a generator signal of 600 Kc, turn the set to the point where maximum output is obtained, which should be approximately 600 Kc on the dial. Adjust antenna section plates of variable for maximum output.

The alignment procedure should be done in the order given for greatest accuracy. Align for maximum output. Reduce input to keep output near 0.4 volts.

MANUAL OF 1952 MOST-OFTEN-NEEDED RADIO DIAGRAMS

TRAVLER Model 5170

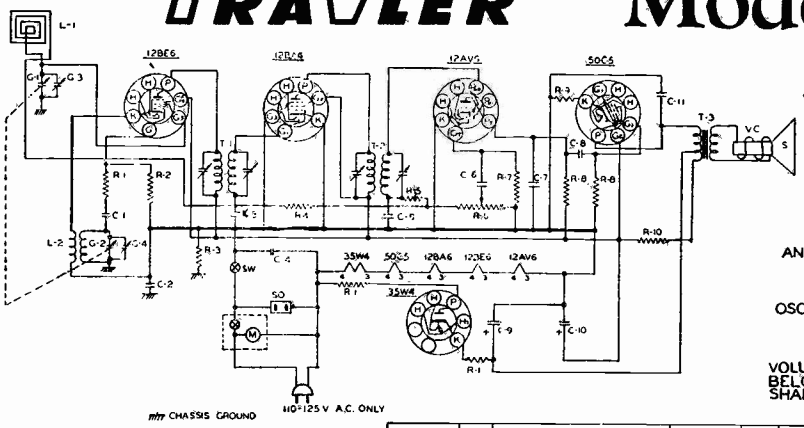

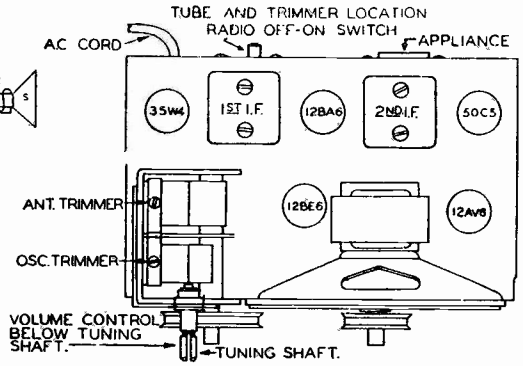

PART NO		DESCRIPTION	PART NO.		DESCRIPTION	PART NO		DESCRIPTION
IR-17	R-1	33 Ω RESISTOR 1/2W 20%	MC-4	C-1	50MMFD MICA CONDENSER.		S	4" PM SPEAKER
IR-9	R-2	22M Ω RESISTOR 1/2W 20%	PC-8	C-2	.1MFD. CONDENSER 400 V	SPK-19	V.C	VOICE COIL
IR-20	R-3	220M Ω RESISTOR 1/2W 20%	PC-2	C-3	.05MFD. CONDENSER 200 V.		T-3	OUTPUT TRANSFORMER
IR-23	R-4	3.3MEG. RESISTOR 1/2W 20%	PC-5	C-4	.05MFD. CONDENSER 400 V	LL-26	L-1	LOOP ANT
IR-10	R-5	47M Ω RESISTOR 1/2W 20%		C-5	220MMFD	LO-14	L-2	OSC. COIL
VC-37	R-6	1 MEG. VOLUME CONTROL.	MC-8	C-6	.002MFD.	CK-1	M	ELECTRIC CLOCK
IR-13	R-7	2.2MEG. RESISTOR 1/2W. 20%		C-7	220MMFD.	SO-37	SO	APPLIANCE SOCKET
IR-11	R-8	470M Ω RESISTOR 1/2W. 20%		C-8	.005MFD.	SW-9	SW	SPST RADIO ON-OFF SWITCH
IR-14	R-9	150 Ω RESISTOR 1/2W. 20%	EC-24	C-9	50 MFD. ELECTROLYTIC 150 V.D.C			
IR-42	R-10	1000 Ω RESISTOR 1 W. 10%		C-10	50 MFD.			
			PC-10	C-11	.005MFD CONDENSER 400 V.			
LI-6	T-1	INPUT I.F TRANSFORMER	GC-5B	G-1	TUNING CONDENSER			
LI-7	T-2	OUTPUT IF TRANSFORMER		G-2				

ALIGNMENT

FIRST STEP: Connect the hot lead from the generator to the ANT. section of the gang condenser, through a .1 MFD condenser. The ground lead from the generator must be connected to the metal frame of the gang condenser. Turn the gang condenser to complete minimum capacity. Adjust the generator to 455KC and adjust the trimmers of the 1st and 2nd I.F. transformers until a maximum reading is noted.

SECOND STEP: With the leads from the generator still connected in the same manner, adjust the Signal Generator to 1650 KC. The OSC. trimmer is located on the front of the chassis between the volume and tuning controls. Adjust this trimmer until the 1650 KC signal is tuned in.

THIRD STEP: Remove the hot lead of the generator from the ANT section of the gang condenser. Adjust the Signal Generator to 1400 KC. Rotate the tuning control until this signal is tuned in. The ANT trimmer is located on the back of the loop antenna. Adjust this trimmer until a maximum reading is noted on the output meter. No further adjustment should be necessary, unless the set has been damaged, as the coils and condenser in this receiver have been specially handled at the factory to insure proper alignment at the lower frequencies.

SCHEMATIC DIAGRAM — MODEL 5171

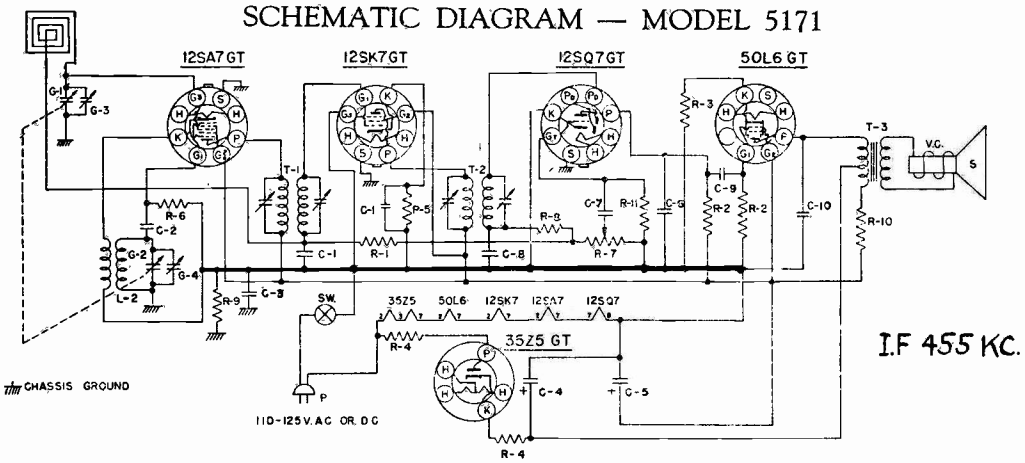

PART NO.		DESCRIPTION	PART NO.		DESCRIPTION	PART NO.		DESCRIPTION
IR-23	R-1	3.3MEG. RESISTOR 1/2W 20%		G-3	ANT TRIMMER CONDENSER	LL-28	L-1	LOOP ANT.
IR-11	R-2	470M Ω RESISTOR 1/2W 20%		G-4	OSC. TRIMMER CONDENSER	LO-13	L-2	OSC. COIL.
IR-14	R-3	150 Ω RESISTOR 1/2 W 20%	PC-2	C-1	.05 MFD. CONDENSER 200 V.	LI-6	T-1	INPUT I.F. TRANSFORMER
IR-17	R-4	33 Ω RESISTOR 1/2 W 20%	MC-4	C-2	50 MMFD. MICA CONDENSER.	LI-7	T-2	OUTPUT I.F. TRANSFORMER
IR-21	R-5	330 Ω RESISTOR 1/2W 20%	PC-9	C-3	.1 MFD. CONDENSER 400 V.		T-3	SPK. OUTPUT TRANSFORMER
IR-9	R-6	22M Ω RESISTOR 1/2W 20%	EC-24	C-4	50MFD. ELECTROLYTIC 150 V.	SPK-19	V.C.	VOICE COIL
VC-36	R-7	1 MEG. VOLUME CONTROL.		C-5	50MFD.		S	P.M. SPEAKER
IR-10	R-8	47M Ω RESISTOR 1/2 W 20%		C-6	220MMFD.	CO-1	P	LINE CORD.
IR-20	R-9	220M Ω RESISTOR 1/2 W 20%		C-7	.002MFD.	SW	SW	AC. SWITCH ON VOLUME CONTROL
IR-42	R-10	1000 Ω RESISTOR 1W 20%	MC-8	C-8	220MMFD. HERLEC			
IR-13	R-11	2.2MEG. RESISTOR 1/2 20%		C-9	.005 MFD.			
GC-5B	G-1, G-2	GANG CONDENSER.	PC-10	C-10	.005MFD. CONDENSER 400V.			

MANUAL OF 1952 MOST-OFTEN-NEEDED RADIO DIAGRAMS

TRAV-LER RADIO CORPORATION

Model 5172

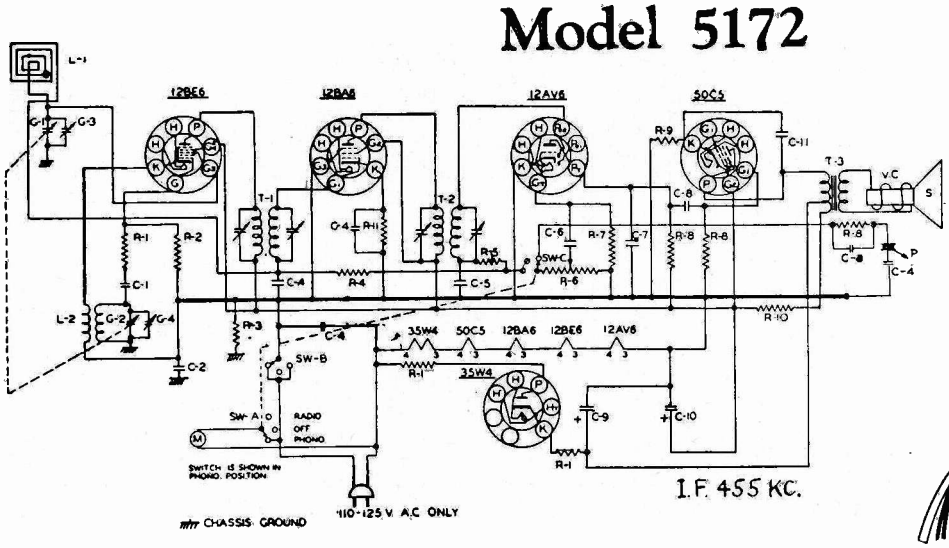

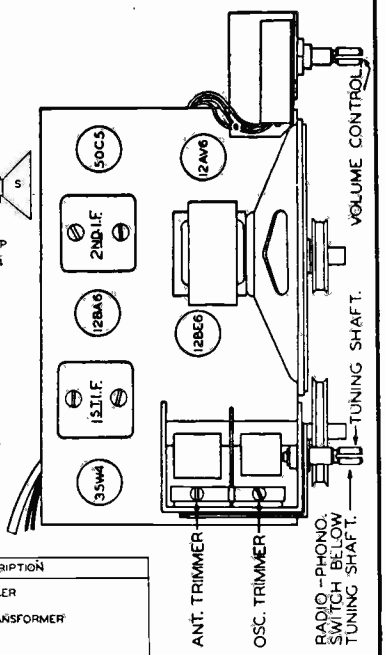

PART NO.		DESCRIPTION	PART NO.		DESCRIPTION	PART NO.		DESCRIPTION
IR-17	R-1	33 Ω RESISTOR 1/2W. 20%	MC-4	C-1	50MMFD MICA CONDENSER.		S	4" P.M. SPEAKER
IR-9	R-2	22M Ω RESISTOR 1/2W. 20%	PC-8	C-2	.1MFD. CONDENSER 400 V.	SPK-19	V.C.	VOICE COIL
IR-20	R-3	220M Ω RESISTOR 1/2W 20%	MC-17	C-8	.470MMFD. MICA CONDENSER.		T-3	OUTPUT TRANSFORMER
IR-23	R-4	3.3MEG. RESISTOR 1/2W. 20%	PC-5	C-4	.05MFD. CONDENSER 400 V.	LL-26	L-1	LOOP ANT.
IR-10	R-5	47M Ω RESISTOR 1/2W. 20%		C-5	220MMFD.	LO-14	L-2	OSC. COIL
VC-37	R-6	1 MEG. VOLUME CONTROL	MC-8	C-6	.002MFD.	M-9	M	PHONO. MOTOR
IR-13	R-7	2.2 MEG. RESISTOR 1/2W. 20%		C-7	220MMFD.		SW-A	
IR-11	R-8	470M Ω RESISTOR 1/2W. 20%		C-8	.005MFD.	SW-15	SW-B	3 POS. 3 POLE RADIO-OFF-PHONO SWITCH.
IR-14	R-9	150 Ω RESISTOR 1/2W. 20%	EC-24	C-9	50 MFD. ELECTROLYTIC 150 W.D.C		SW-C	
IR-42	R-10	1000 Ω RESISTOR 1 W. 10%		C-10	50 MFD.	PU-12	P	PICKUP ARM, ASTATIC TYPE "D-AG" CARTRIDGE.
IR-21	R-11	330 Ω RESISTOR 1/2W. 20%	CC-3	C-11	.005MFD.			
LI-6	T-1	INPUT I.F. TRANSFORMER						
LI-7	T-2	OUTPUT I.F. TRANSFORMER	GC-58	G-1 G-2	TUNING CONDENSER			

Model 5210

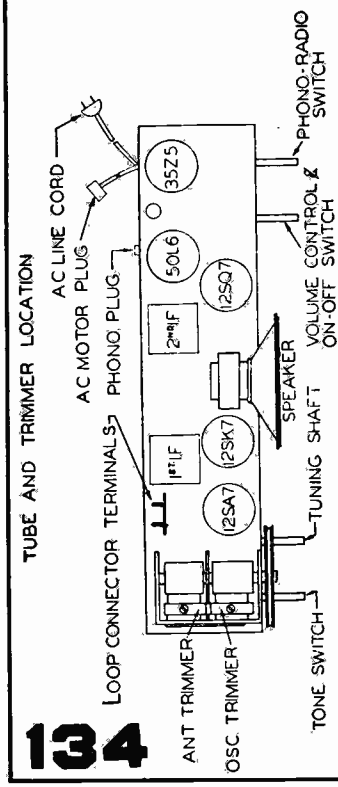

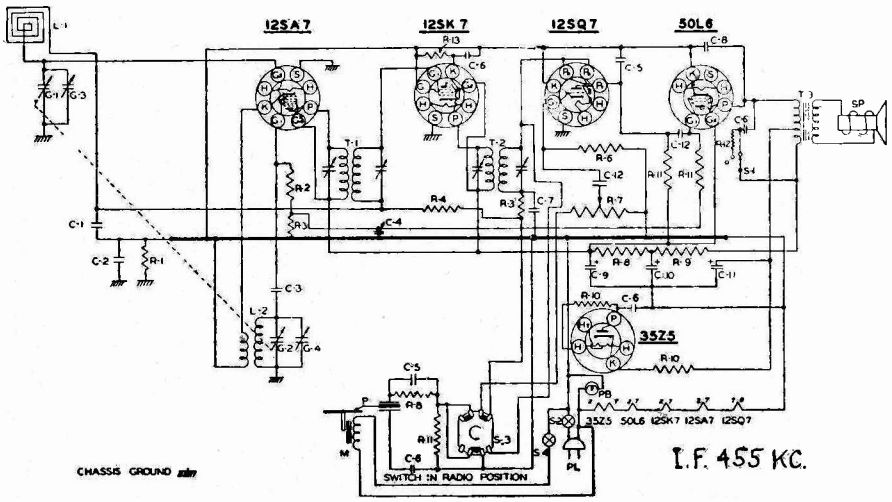

PART NO.		DESCRIPTION	PART NO.		DESCRIPTION	PART NO.		DESCRIPTION
PC-2	C-1	.05MFD CONDENSER 200 V	IR-1	R-8	470 Ω RESISTOR 1/2W. 20%	SW-2	S-1	TONE SWITCH
PC-8	C-2	.1MFD CONDENSER 400 V	IR-42	R-9	1000 Ω RESISTOR 1 W 10%		S-2	SWITCH ON VOLUME CONTROL
MC-4	C-3	.0005MFD MICA	IR-17	R-10	33 Ω RESISTOR 1/2W 20%	SW-1	S-3	PHONO-RADIO SWITCH
PC-4	C-4	.25MFD CONDENSER 200V	IR-11	R-11	470M Ω RESISTOR 1/2W 20%		S-4	SWITCH ON RECORD CHANGER
MC-5	C-5	.0005MFD MICA	IR-15	R-12	2200 Ω RESISTOR 1/2W 20%	AC-M-7	M	RECORD CHANGER MOTOR
PC-5	C-6	.05MFD CONDENSER 400V	IR-21	R-13	330 Ω RESISTOR 1/2W 20%	AC-PU-7	P	CRYSTAL PICKUP ARM CARTRIDGE S-1
MC-2	C-7	.0001MFD MICA	GC-5	G-1 G-2	GANG CONDENSER	PB-2	PB	110 V 7½W PILOT BULB
PC-7	C-8	.01MFD CONDENSER 400V		G-3	ANT TRIMMER	CO-2	PL	LINE CORD
	C-9	20MFD		G-4	OSC TRIMMER			
EC-14	C-10	40MFD 150WV ELECTROLYTIC						
PC-6	C-11	40MFD	LI-6	T-1	INPUT I.F. TRANSFORMER			
IR-20	C-12	.005MFD CONDENSER 600 W.	LI-7	T-2	OUTPUT I.F. TRANSFORMER			
IR-9	R-1	220M Ω RESISTOR 1/2W 20%		T-3	OUTPUT TRANSFORMER			
IR-10	R-2	22 M Ω RESISTOR 1/2W 20%						
IR-23	R-3	47 M Ω RESISTOR 1/2W 20%	LL-17	L-1	LOOP ANT			
IR-12	R-4	3.3MEG Ω RESISTOR 1/2W 20%	LO-14	L-2	OSC. COIL			
IR-13	R-5	1MEG Ω RESISTOR 1/2W 20%						
VC-4	R-6	22MEG Ω RESISTOR 1/2W 20%	SPK-12	SP	5" P.M. SPEAKER			
	R-7	1MEG. VOLUME CONTROL						

WEBSTER-CHICAGO

MODELS 100 AND 101 RECORD CHANGERS

NOTE: The mechanism of Models 100 and 101 are identical. The difference between them is one of styling and appearance.

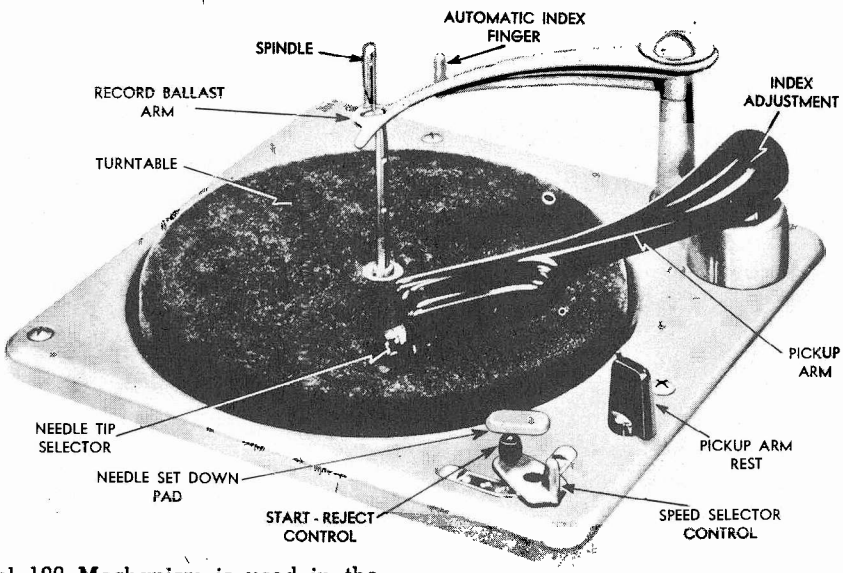

The basic Model 100 Mechanism is used in the following models:

Model 100-1 is the basic record changer chassis with a Crystal pickup cartridge and replaceable needle. The needle and cartridge have high compliance so they will play both standard groove and microgroove records at low needle pressure.

Model 100-27 is the same basic mechanism as above with special pickup arm and interchangeable plug-in heads designed for the G. E. Variable Reluctance Cartridges.

Model 100-55, Model 100-557 are models 100-1 and 100-27 respectively mounted on an attractive metal base to fully enclose and protect the mechanism.

Model 100-62 is a complete portable phonograph with the Model 100-1 record changer, an amplifier and speaker mounted in an attractive burgundy leatherette carrying case.

Model 100-64 is the basic Model 100 mechanism mounted in an attractive burgundy leatherette carrying case for portable use.

FOR "AUTOMATIC" RECORD CHANGE

1. Lift the Record Ballast Arm and swing it away from the spindle until it "latches" with a light snap. The Automatic Index Finger will follow
2. Place up to a 1-inch stack of any one size of records on the Spindle and swing the Record Ballast Arm back to the spindle allowing it to drop in position with the spindle in the hole. The Automatic Index Finger will remain away from the record until the change cycle starts. It will then move in to feel the diameter of the record and automatically index the pickup needle to the proper playing position.
3. Then turn Needle Tip Selector to correct position for records being played. Move the Speed Selector Lever to the correct speed for the records being played and push the START-REJECT control.
4. To reject any record while playing in the Automatic Position, push the Reject control.

After the last record has been played, the entire stack may be removed from the turntable at one time. The simplest procedure is as follows:

a. Lift and turn the Record Ballast Arm weight out of position until it latches. Be sure the pickup arm is on the pickup arm rest.
b. Place the fingers of both hands under opposite edges of the bottom record. Do not apply pressure to the top record but keep your thumbs free, and lift the stack of records straight up, following the contours of the spindle. This permits the stack of records to follow the curve of the spindle without binding.

FOR "MANUAL" RECORD CHANGE

1. Lift the Record Ballast Arm and swing it and the Automatic Index Finger away from the spindle. The changer is then automatically in "manual" until the Record Ballast Arm is mov-

ed in and placed over the spindle. The pickup arm can be moved in or out without tripping the Velocity Trip automatic mechanism so long as the Record Ballast Arm and Automatic Index Finger are left in this position.

2. Turn Needle Tip Selector to correct position for record being played. Place a record on the turntable. Move the Speed Control Lever to the correct speed for the record being played and then place the needle gently on the record. To stop the mechanism at any time turn the Speed Selector Lever to an "OFF" position.

SERVICE INFORMATION

The functions and most probable misadjustments of the main assemblies are as follows (reference numbers refer to the exploded views).

FAILS TO CHANGE RECORDS AUTOMATICALLY

The Main Cam Assembly (61) drives the mechanism associated with the action of the Pickup Arm (23) and the Record Selector assemblies. It, in turn is driven by the gear train (9) and the Turntable which is rim driven by the phonograph motor.

The Cam Drive Gear (56) is put in motion or "tripped" by means of the "Velocity Trip" (57) or by the manually operated "reject" trip (25). When the movement of the Pickup Arm toward the spindle is greater than 1/8" in 1/2 revolution of the turntable, the Velocity Trip Arm (76) trips the Velocity Trip (57). This releases the Actuating Pawl on the Main Cam Assembly (61), allowing it to engage the Cam Drive Gear (56) and driving it through the change cycle. The pressure from the Velocity Trip Arm required to actuate the trip mechanism is negligible.

The Velocity Trip Arm (76) follows the movement of the Pickup Arm through a weighted friction clutch (75). This clutch must be kept free of oil and grease. If the clutch does not cause the Velocity Trip Arm to trip the mechanism, clean the clutch parts with carbon tetrachloride. This clutch should operate the trip mechanism without placing undue drag on the movement of the pickup arm.

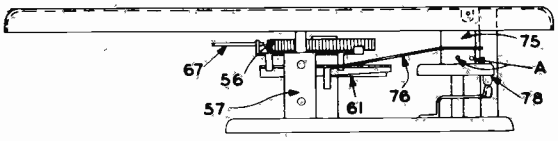

Fig. 1

Also check for:

1. Velocity Trip (57) binding on its mounting Pin (J of 69).
2. Slight burr on end of the Actuating Pawl or on the underside of the hook end of the Velocity Trip (57).
3. Actuating Pawl stuck (part of Main Cam Assembly (61) engaged by the hook end of the Velocity Trip (57)).
4. Velocity Trip Arm (76) bent and not hitting the Velocity Trip (57).
5. Velocity Trip Arm (76) fails to touch the Velocity Trip.
6. Velocity Trip (57) rubbing on the underside of the Cam Drive Gear (56).
7. No velocity lead-in groove or eccentric groove in the center of record.
8. Foreign matter in record groove.
9. Badly worn record.
10. Badly bent or worn needle.
11. Spindle out of adjustment. (See "Does not push off records.")
12. Rubber bumper on Velocity Trip (57) damaged by sharp edges of reset points of gear (56). Replace bumper, Part No. 24P023. The bumper can be slipped off its stud and a new one forced on.

CHANGES RECORDS PREMATURELY

At the completion of the change cycle, the Actuating Pawl (part of 61), is disengaged from the Cam Drive Gear (56) by the hook end of the Velocity Trip (57), which has been returned to its normal position by the reset points on the Cam Drive Gear (56).

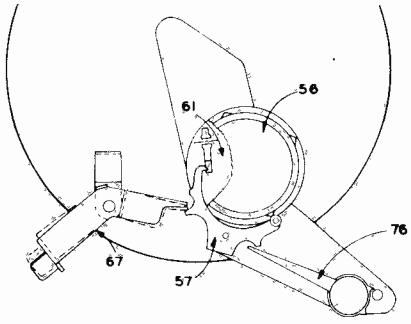

Fig. 2

If the vertical clearance between the lip on the Velocity Trip Lever and the edge of the Main Cam is too small, it will prevent the hooked end of the Velocity Trip Lever from engaging the trigger. Adjust the clearance between the lip on the Velocity Trip Lever and the Main Cam to be within 1/32" and 1/64" when the roller is contacting the point of one of the reset points on the Cam Drive.

Also check for:

1. Velocity Trip (57) rubbing on Cam Drive Gear (56).
2. Manual Trip Lever (67) binding.
3. "Disengage Roller" broken on the Velocity Trip (57).

PICKUP ARM DOES NOT CLEAR 1" RECORD STACK

The vertical movement of the pickup arm is controlled by the angle of the pickup arm raising lever (62 and Fig. 3). The needle should approach the top record of a full 1" stack of records on the turntable with approximately 1/16" clearance.

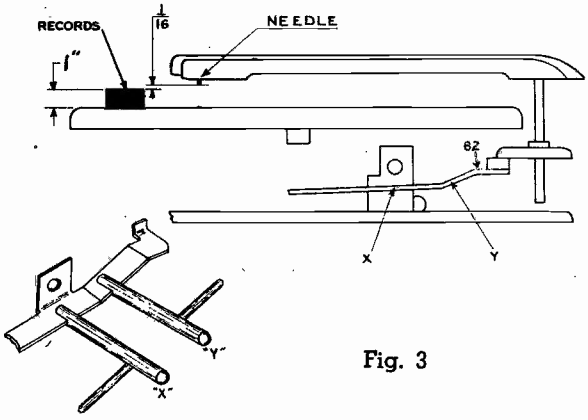

Fig. 3

To adjust:

1. Put a full 1" stack of records ON THE TURNTABLE.
2. Trip the "Reject" control and rotate the turntable clockwise until the pickup arm reaches its highest point.
3. Be sure the front or 10" notch in the pickup arm raising disc engages the pickup arm raising lever.
4. If the needle does not clear the top record or if it raises too high, adjust by holding the pickup arm raising lever (62) at point X and bending at Y as indicated in Fig. 3.

CAUTION: All adjusting bends should be made slowly, using slight but firm, easy pressure. Be careful to bend only up and down, not across the lever.

Be sure the set screws in the Pickup Arm Raising Disc (78A) are not loose and are properly positioned in the alignment holes.

NEEDLE SET DOWN POINT INCORRECT

The pickup arm should set the needle down at or just outside the "lead-in" groove of the record, regardless of the size of the record. It is advisable to follow a set routine when checking for the proper needle set down positioning. At the factory the following routine is followed:

7" ADJUSTMENT

1. Place a 7" Record on the spindle and permit the Automatic Index Finger to rest against the edge of the record. With the Speed Selector in the "OFF" position, press the Reject Button and revolve the turn table by hand thereby putting changer through its change cycle. Note action of the Raising Lever; when this lever reaches its highest point and its farthest outward excursion, the edge of the lever should seat in the 7" notch of the Raising Disk. In this position of the Disk its positioning ear should touch the sub plate post. If necessary bend the ear so that the above action occurs each time the changer is cycled with a 7" record on the spindle.

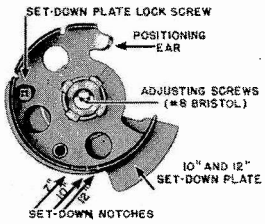

2. Continue the change cycle until the needle is just above the 7" record. Nearly exact indexing can now be attained by means of the adjusting screws in the hub of the Raising Disk. These screws have pointed ends which fit into "off-center" holes in the Tone Arm Shaft. By simultaneously loosening one screw and tightening the other the needle can be brought just over the lead-in groove of the record.

   This adjustment requires the use of two No. 8 Bristol wrenches. After the adjustment has been made both set-screws should be tight.

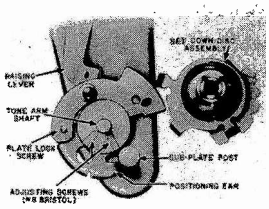

Trip Arm Stop Plate Not Shown

3. A vernier adjustment of the index is made by means of the slotted screw beneath the hole at the back end and on top of the tone arm.
4. Note that there is no mechanical connection between the Raising Disk and the Set Down Assembly. Also note that 7" indexing is determined by the Raising Disk independently of the Set Down Disk.

   WHEN THE 7" INDEX ADJUSTMENT IS COMPLETED *DO NOT* ALTER ANY OF PARAGRAPH 1 AND 2 ADJUSTMENTS WHEN ADJUSTING FOR 10" AND 12".

10" AND 12" INDEX ADJUSTMENTS

5. Make certain 7" indexing is correct. If not adjustment must be made as described above.

6. 10" indexing is determined by the engagement of the 10"-12" Set Down Plate with the Set Down Plate Stop Ear because the Ear restricts the movement of the Raising Disk causing the Raising Lever to come out of the 7" notch and slide into the 10" notch.

7. Place a 10" record on the spindle and permit the Index Arm to rest against the edge of the record. With the Speed Selector in the "OFF" position, press the reject button and revolve the turntable by hand until the record drops and the needle is just above the level of the record. At this point the Raising Lever should be in in the 10" notch and proper indexing will occur. If not, the Set Down Plate can be adjusted by loosening the Plate Lock Screw and moving the plate so that it permits the Raising Lever to "fall" into and stay in the 10" notch. Be sure to retighten the Lock Screw.

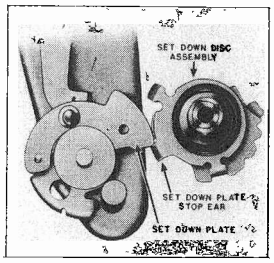

Trip Arm Stop Plate Not Shown

8. 12" indexing is the same as 10" except that the more inward position of the Set Down Plate Ear, restricting the movement of the Raising Disk causes the Raising Lever to come out of the 7" notch, pass through the 10" notch and "fall" into the 12" notch.

LOCK-OUT

9. When the last record of a stack is being played the Index Arm moves against the Over-Arm bringing the Lock-out Ear into a position shown below. At the end of the record the Raising Lever returns the Raising Disk to the position shown to the right. But when it attempts to carry the Disk inward again, the Disk movement is completely restricted by the Lock-Out Ear causing the Tone Arm assembly to come to rest on the rest button.

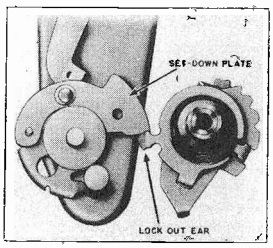

10. The Lock-Out Ear can be bent to properly adjust it for performing the above function.

11. IF A PERSON HOLDS OR MOVES THE INDEX ARM WHILE THE RECORD CHANGER IS GOING THROUGH ITS CHANGE CYCLE THE LOCK-OUT EAR MAY BECOME BENT OR THE SET DOWN PLATE MAY BE FORCED OUT OF POSITION THEREBY EFFECTING 10"-12" INDEXING.

If it is necessary to adjust the Lock-Out Ear make sure it is not positioned so low that it interferes with the free movement of the Set Down Plate during change cycle when records are on the spindle.

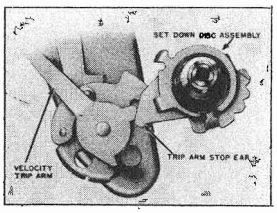

MANUAL PLAY

12. For manual playing of records the Index Arm is swung away from the spindle as far back as it will go. This causes the Trip Arm Stop Ear to engage the Velocity Trip Arm and prevent it from tripping and cycling the changer mechanism.

13. On early production of Model 100 some Pickup Arm Raising Disks (part No. 11X552) were produced with the 7" notch slightly out of location. If such a changer is adjusted for 7" indexing it is possible that reliable 10"-12" setdown cannot be attained. This condition requires that the Disk be replaced with one of later production in which the 7" notch has been corrected.

Record Changers bearing production tags (under the main plate) carrying the code number 375-023 or smaller may require replacement of the Disk. Those carrying the code number 375-024 or higher are equipped with the proper disk.

ERRATIC NEEDLE SETDOWN POSITIONING

If all adjustments to assure a correct needle set down seem all right and the needle still sets down at odd and wrong positions, check:

1. Lip (D of 73, Fig. 8) should engage G of 64A by only about 3/32". If it is difficult for G to clear D, the movement of the pickup arm will not be properly controlled and erratic "Indexing" will result. Bend D, if necessary, to permit, smooth, easy separation of these two parts.

CANNOT "REJECT" RECORDS

Pushing the Reject button (25) causes the Trip Lever Arm (67) to contact the Velocity Trip mechanism (57), putting the change mechanism in cycle.

If you cannot "Reject" records, check the perpendicular ear of the Velocity Trip mechanism. It may be bent so the Trip Lever Arm cannot touch it.

CANNOT PLAY RECORDS "MANUALLY" OR ONE AT A TIME

The changer is automatically in "manual" whenever the Record Ballast Arm (1A) and the Index Finger (1C) are turned out as far as they will go, as tho you were loading a stack of records. The finger D of (73) holds the finger G of (64A), causing finger A of (73) to hold the velocity trip arm away from the change mechanism as long as the Index Finger is "out" away from the spindle.

If the mechanism "trips" with the Index Finger in the Manual position check for:

1. No detent in end of finger D of (73).
2. Dirt in the detent.
3. Finger A of (73) bent

DOES NOT PUSH OFF RECORDS

The action of the vertical cam of (64) on the bent lever plate (71) forces the actuating rod (A) up into the spindle (3) to move the record push off finger forward, pushing off the bottom record of the unplayed stack.

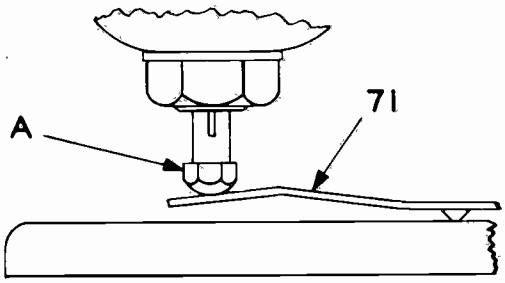

Fig. 6

If the push off finger fails to release the record:

1. Put a full 1" stack of 12" records on the spindle, turn on the A.C. power and trip the Reject button. If the bottom record is not pushed off:
2. Turn the Adjusting nut (A) ¼ turn counter-clockwise out of the spindle to make the actuating rod slightly longer.

   If the bottom record still does not drop, continue turning the adjusting nut counter-clockwise, ¼ turn at a time, until the record is pushed off.

   CAUTION: If the actuating rod is turned out too far, the cam of (64) will not be able to complete its motion and the changer will stall in cycle. When a change cycle has been completed there should be very slight play at both ends of the rocker lever (71).

MORE THAN ONE RECORD IS DROPPED DURING A CHANGE CYCLE

If more than one record is dropped at a time, it will be found to be due to:

1. Foreign matter in spindle recess causing the latch to stick.
2. Exceptionally thin records.
3. Bent spindle.

INCORRECT TURNTABLE SPEED

The three speed mechanism and the motor are one assembly. The Drive Wheels (31, 32 and 33) are mounted on a movable metal plate (35) in such a way that moving the Speed Selector Lever (27) moves the correct wheel into position between the motor shaft and the Turntable drive idler (79). The tongue of the detent spring (53) fits into an indentation in the edge of the metal plate to index the speed selector wheels and hold them firmly in the desired position.

"OFF" indentations between each speed position hold the drive wheels away from the motor shaft and the Turntable idler when the Speed Selector Lever is in an "off" position.

If the Turntable speed is incorrect, check for:

1. Turntable Idler (79) cocked at an angle. Bend the wheel and shaft to straighten wheel.
   CAUTION: Do not bend idler (79) toward the drive wheels (31, 32, 33). Bend only sideways or away from the wheels.
2. The drive wheel mounting assembly (part of motor assembly (44)) must not bind. There should be at least 1/64" play at point "A". Bend the raised metal stop if more clearance is needed.
3. The entire motor assembly (44 plus 35, etc.) should be free floating. There should be slight play of the Speed Control Lever (27) between the "78" and "33" positions and the stops at the end of the speed selector dial.
4. Defective drive wheels (31, 32, 33).

CHANGE CYCLE STARTS BEFORE END OF RECORD

If the Trip Assembly chatters while the changer is running or if the changer cycles before the entire record is played, there is probably insufficient clearance between the hook end of the Velocity Trip (57) and the actuating gear (56). This clearance should be adjusted to be within 1/32" to 1/64" by bending the lever.

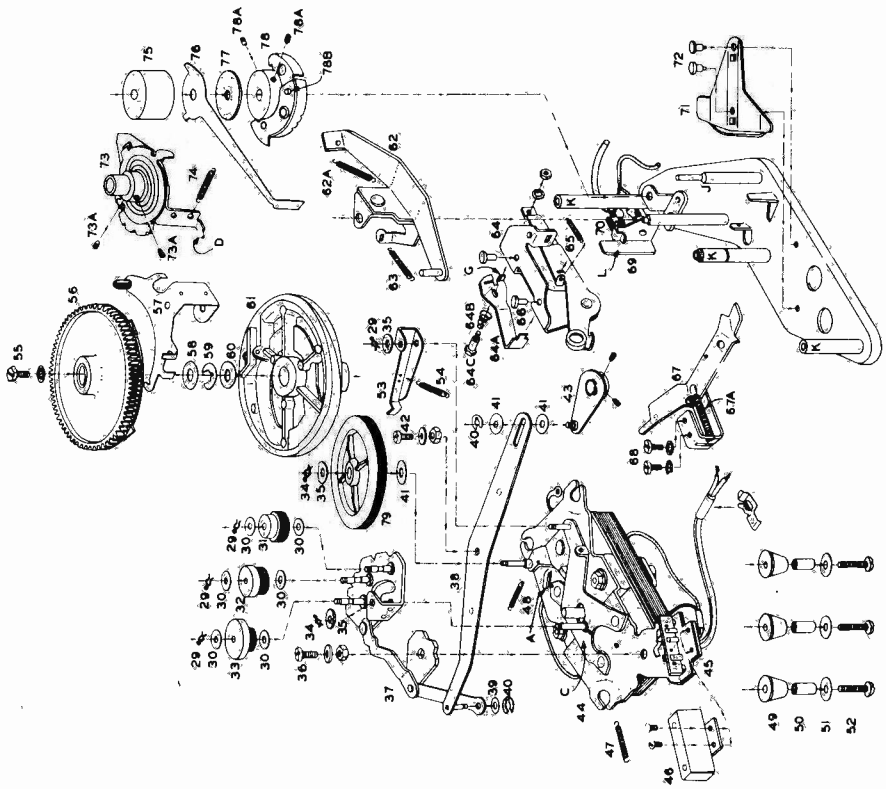

Fig. 8
Exploded View below Main Plate

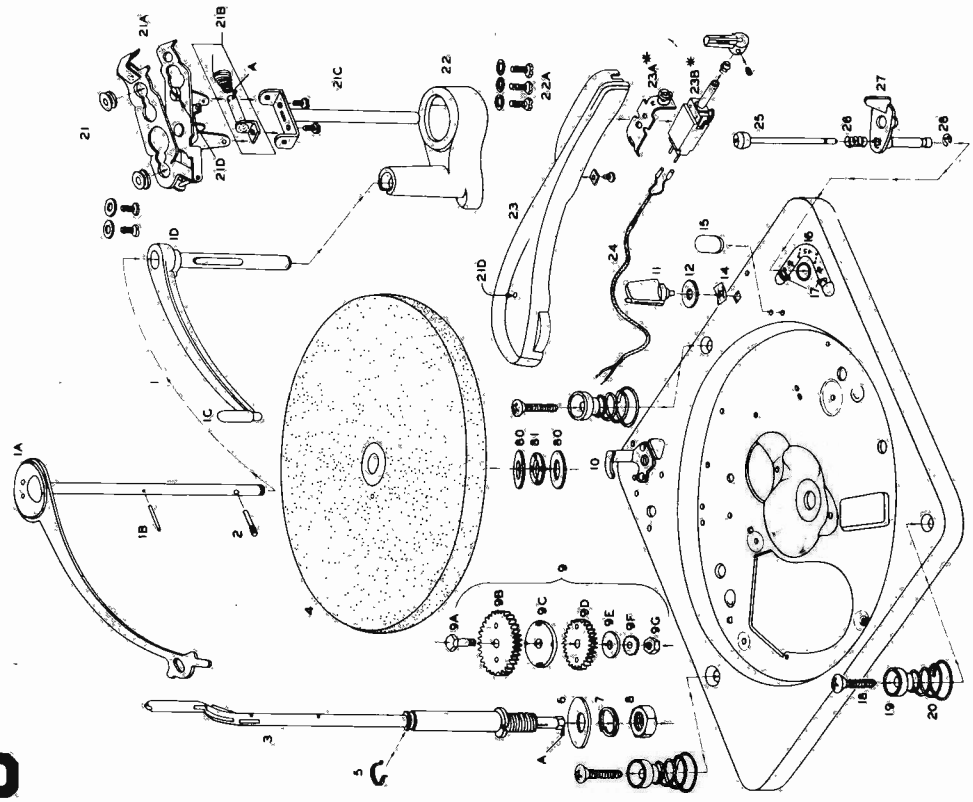

Fig. 7
Exploaed View above Main Plate

MANUAL OF 1952 MOST-OFTEN-NEEDED RADIO DIAGRAMS

MODEL 100 RECORD CHANGER

WEBSTER-CHICAGO

SERVICE INSTRUCTIONS

MODEL No. 100—REPLACEMENT PARTS LIST

Figure numbers refer to the exploded views above.

NOTE: The mechanism of Models 100 and 101 are identical. The difference between them is one of styling and appearance.

Figure Number	Part Number	Description	List* Price
1	11X550	Record Ballast Arm and Index Finger Assembly — Complete	$2.80
1A	11X549	Record Ballast Arm	1.87
1B	41P731	Knurled Pin for 11X550	.10
1C	24P048	Index Finger Cushion	.08
1D	42X218	Index Finger Arm	1.75
2	41P743	Knurled Pin for 11X549	.08
3	11X558	Spindle	4.65
4	11X138	Turntable	3.65
5	50P221	Retainer for Turntable	03
6	25P289	Cup Washer — Spindle Mounting	.01
7	25P403	Lock Washer — Spindle Mounting	01
8	26P687	Nut — Spindle Mounting	05
9	11X132	Idler Gear Assembly	70
9A	41P333	Shoulder Screw	.12
9B	47P024	Idler Gear — Large	30
9C	45P342	Coupler — for 11X132	10
9D	47P023	Idler Gear — Small	.25
9E	25P284	Washer — for 11X132	.03
9F	25P222	Lock Washer — for 11X132	.02
9G	26P046	Nut — for 11X132	.02
10	45P191	Stop Bracket for Pickup Arm	16
11	49P099	Pickup Arm Rest	40
12	25P388	Washer	02
14	26P554	Speed Nut	03
15	24P004	Needle Pad	15
16	78P508	Speed Indicator Dial	20
17	27P205	Rivet for Indicator Dial	.03
18	26P740	Mounting Screw	05
19	24P007	Mounting Grommet	.05
20	46P116	Mounting Spring	05
21	21X282	Pickup Arm Hinge and Shaft Assembly	2.00
21A	21X283	Pickup Arm Hinge	.90
21B	11X386	Pickup Arm Counter Balance	.60
21C	11X385	Pickup Arm Shaft	.40
22	42P219	Housing	1 25
22A	26P747	Housing Mounting Screw	03
23	49X123-X	Pickup Arm	1.60
23A 23B		The mounting bracket required will depend upon the cartridge used. Order exact replacement cartridges from your parts distributor by the cartridge manufacturer's part number, stamped on the cartridge. The mounting bracket need not be replaced when replacing the cartridge. Nor is the bracket usually included in the replacement cartridge package.	
24	20X1363-1	Pickup Cord and Lug Assembly	1.50
25	49X135	Reject Button	50
26	46P226	Compression Spring — Reject Button	.03
27	42X217	Speed Selector Lever	1 00
28	25P447	"C" Retainer for Reject Button	02
29	50P034	Retainer Clip	.03
30	25P406	Fibre Washer	.02
31	11X456	Drive Wheel — 33 R P.M	1 00
32	11X458	Drive Wheel — 45 R P.M	1.00
33	11X460	Drive Wheel — 78 R P.M	1 00
34	50P125	Retaining Clip	$ .05
35	25P030	Felt Washer	.02
36	41P673	Shoulder Screw — Switch Cam	.12
37	17X481	Drive Wheel Mounting Plate and Cam	1.30
38	11X539	Speed Selector Arm	.50
39	25P030	Felt Washer for 11X539	.02
40	25P439	"C" Washer for 11X539	.02
41	25P046	Fibre Washer	.02
42	41P747	Shoulder Screw for 11X539	.12
43	11X540	Speed Selector Link and Hub	.82
44	17X467	Motor and Top Bridge Assembly	9.50
45	32P054	A.C. Switch	1.00
46	45P819	Switch Cover	.20
47	46P139	Tension Spring — Index Plate	.10
48	46P134	Tension Spring — Idler Link	.10
49	25P363	Motor Mount Grommet	.10
50	41P592	Motor Mount Sleeve	.06
51	25P367	Motor Mount Washer	.03
52	26P110	Motor Mount Screw	.05
53	45P817	Speed Selector Lock Lever	.20
54	46P187	Tension Spring — Lock Lever	.10
55	26P748	Screw — Main Plate to Sub Plate Assembly	.02
56	11X032	Main Actuating Gear	.90
57	11X320	Velocity Trip	.45
58	25P343	Washer — for 11X545	.03
59	25P342	"C" Washer — for 11X545	.04
60	25P083	Washer — for 11X545	.02
61	11X545	Main Cam Assembly	1.85
62	11X553	Pickup Arm Raising Lever	1.25
62A	46P022	Tension Spring — Raising Lever	.10
63	46P221	Tension Spring — Raising Lever	.10
64	11X546	Cam Lever and Bracket — Complete	1.25
64A	45P921	Cycle Stop Arm	.25
64B	46P218	Compression Spring	.10
64C	41P746	Shoulder Screw for 11X546	.10
65	46P017	Tension Spring for 11X546	.06
66	27P072	Rivet for Cam Lever Mounting	.02
67	11X542	Reject Trip Lever	.90
67A	46P219	Tension Spring — Trip Lever	.10
68	26P747	Screw — Trip Lever Mounting	.03
69	45P926	Positioning Plate	.30
70	70P045	Standoff Lug Assembly	.10
71	45P909	Spindle Actuating Lever	.30
72	27P217	Rivet for Mounting 45P909	05
73	11X547	Set Down Disc Assembly	1.50
74	46P225	Tension Spring — Set Down Disc	.10
75	41P576	Clutch Weight	.30
76	45P935	Velocity Trip Arm	.10
77	23P009	Felt Washer — Velocity Trip	.02
78	11X552	Pickup Arm Raising Disc	1.25
79	11X366	Idler Wheel	.75
80	25P269	Washer — Bearing Race	.08
81	11X058	Turntable Bearing	.20

*Prices subject to change without notice

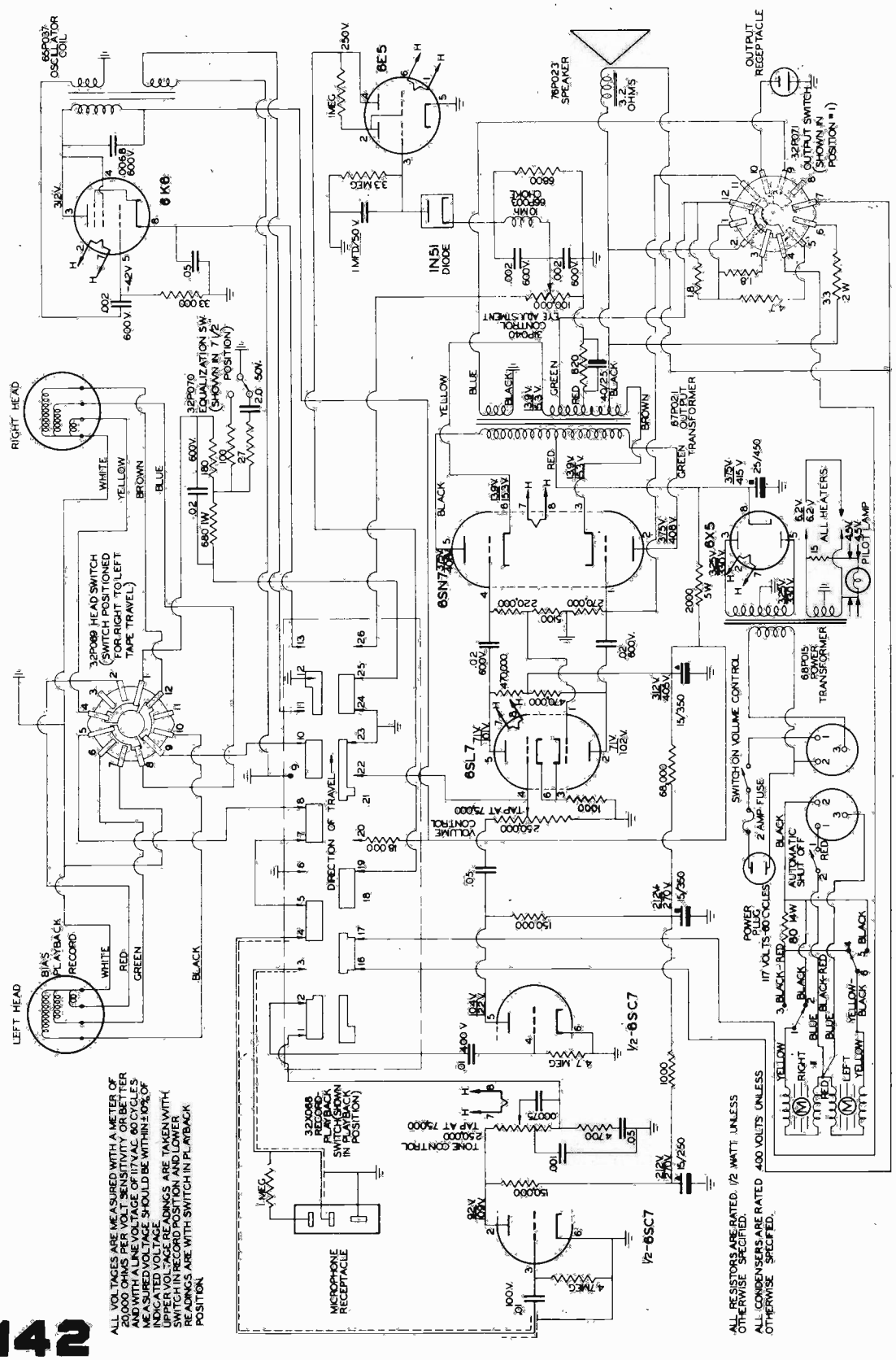

TO ADJUST THE MAGIC EYE VOLUME LEVEL INDICATOR:

Apply a 1 volt signal from an audio oscillator to the phono input of the recorder. Connect a vacuum tube voltmeter to the output jack, and turn the output selector switch to position 2. Adjust the output of the oscillator and the volume control of the recorder so a 10.5 volt signal is indicated on the VTVM. Adjust the potentiometer, so the shadow of the magic eye tube just closes

WESTERN AUTO SUPPLY COMPANY

MODELS D-2108, D-2109

(FACTORY MODEL 237) **TRUETONE RADIO RECEIVER**

ALIGNMENT PROCEDURE

Output meter connection ..... Across 3.2 ohm speaker voice voil
Output meter reading to indicate 0.05 watt across speaker voice coil ..... 0.4 volt
Generator Modulation ..... 30%, 400 cycles
Position of volume control ..... maximum (fully clockwise)
Position of pointer with Rotor full open (Plates out of mesh) ..... slightly beneath the 1620 kc calibration mark on the dial (pointer horizontal to light)

	Position of Variable	SIGNAL GENERATOR				Trimmer Adjustments (In order shown)
		Frequency	Dummy Antenna	Connection to Receiver	Ground Connection	
IF	Rotor Full Open (Plates out of mesh)	455 kc.	.1 mfd	Grid of 12BE6 (Pin 7)	B-	Input and Output Trimmers on I.F Can T3 and T4
RF	Rotor Full Open (Plates out of mesh)	1620 kc.	75 mmf	Antenna Hank	Chassis	Oscillator Trimmer T2
	1400 kc.	1400 kc.	75 mmf	Antenna Hank	Chassis	Antenna Trimmer T1
	600 kc.	600	75 mmf	Antenna Hank	Chassis	(Check Point)*

**With a generator frequency of 600 Kc, tune the set to the point where maximum output is obtained, which should be approximately 600 Kc on the dial.*

Align for maximum output. Reduce input as needed to keep output near 0.4 volts.

The alignment procedure should be done in the order given for greatest accuracy.

Always keep the output from the generator at its lowest possible value to prevent the AVC of the receiver from interfering with accurate alignment.

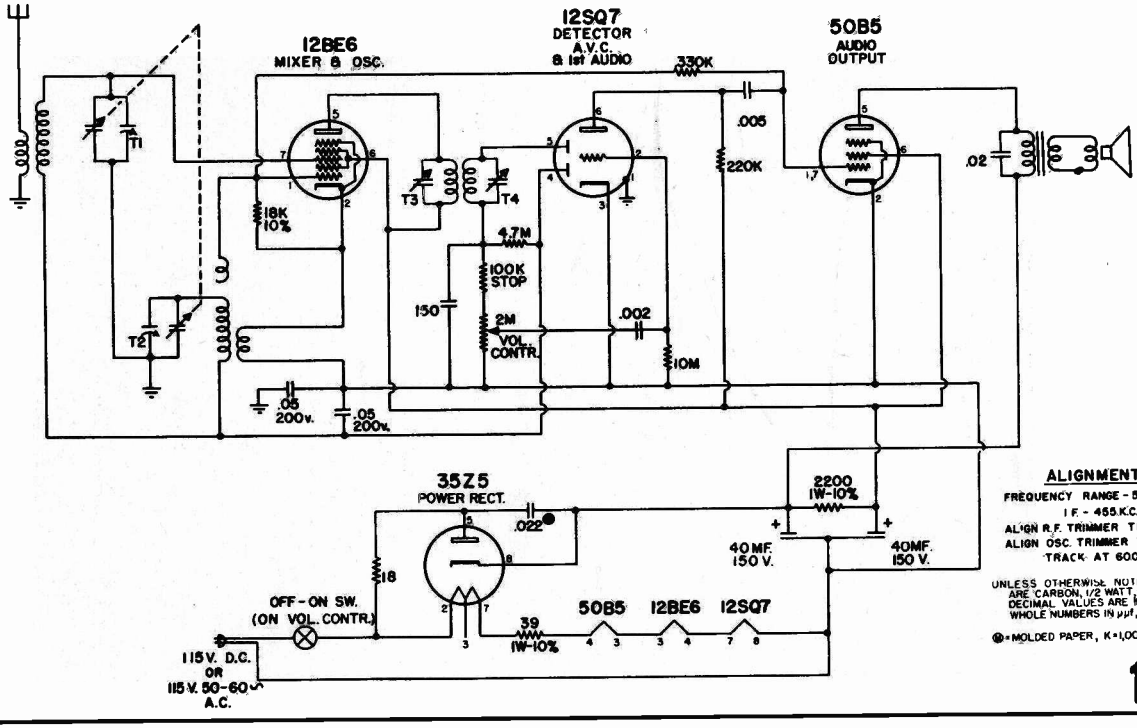

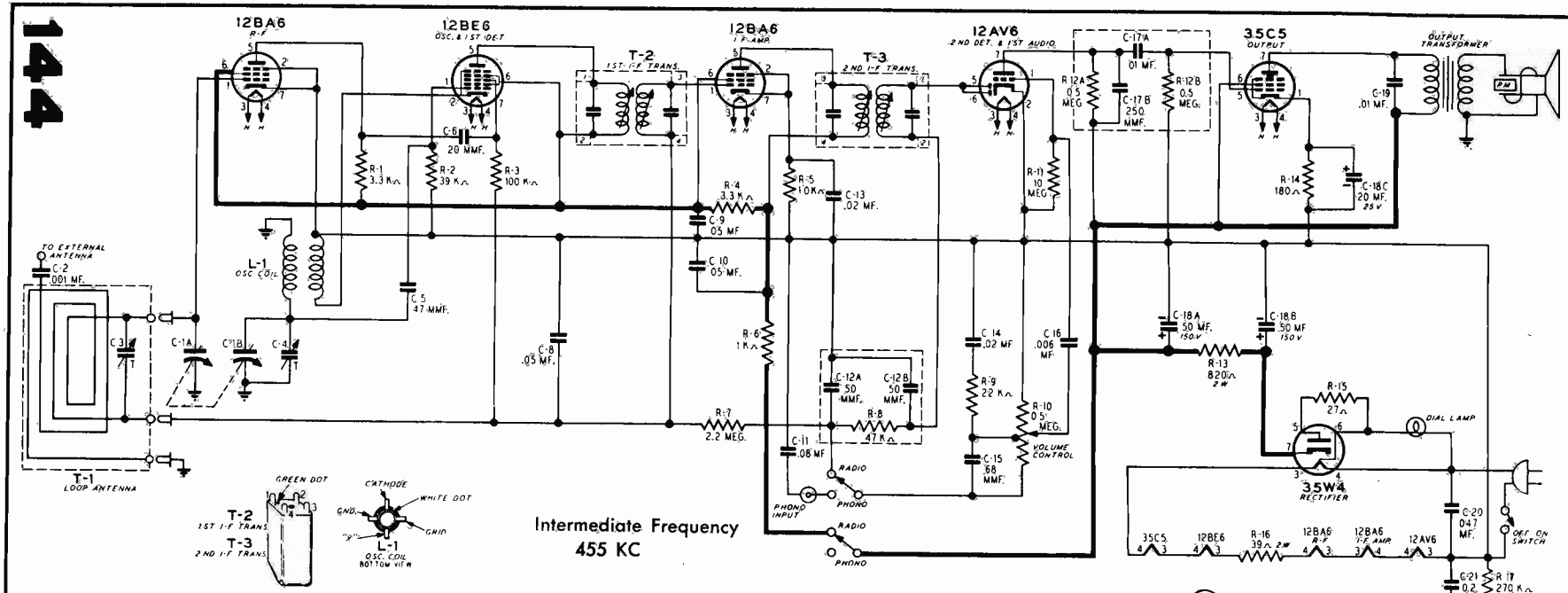

Intermediate Frequency
455 KC

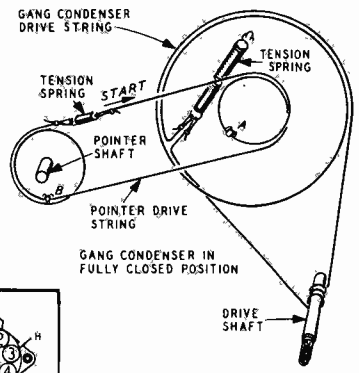

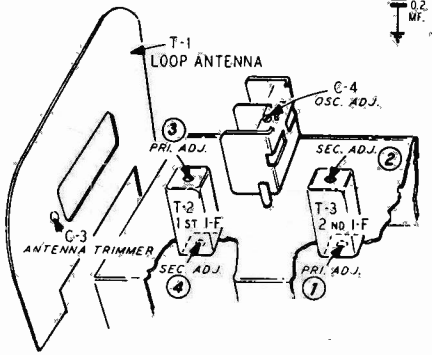

TUBE SOCKET VOLTAGES

Socket voltages are shown on the Bottom Socket diagram at the tube socket terminals. All voltages are between the socket terminal and "X" point. Plate, screen and cathode voltages were taken with a 1000 ohm-per-volt meter with a 300 volt scale used for plate and screen voltages. Audio grid voltages were read with a vacuum tube volt-meter.

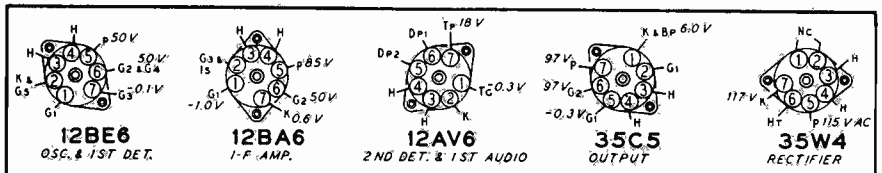

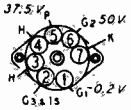

STANDARD TUBE SOCKET SYMBOLS

BP—BEAM FORMING PLATE
DP—DIODE PLATE
G—GRID
H—HEATER
HT—HEATER TAP
IS—INTERNAL SHIELD
K—CATHODE
NC—NO CONNECTION
P—PLATE
TG—TRIODE GRID
TP—TRIODE PLATE

truetone

MODEL D2237A

FACTORY MODEL 325D27-202

WESTERN AUTO SUPPLY CO

WESTERN AUTO SUPPLY COMPANY

MODEL D-2263

FACTORY MODEL 234031

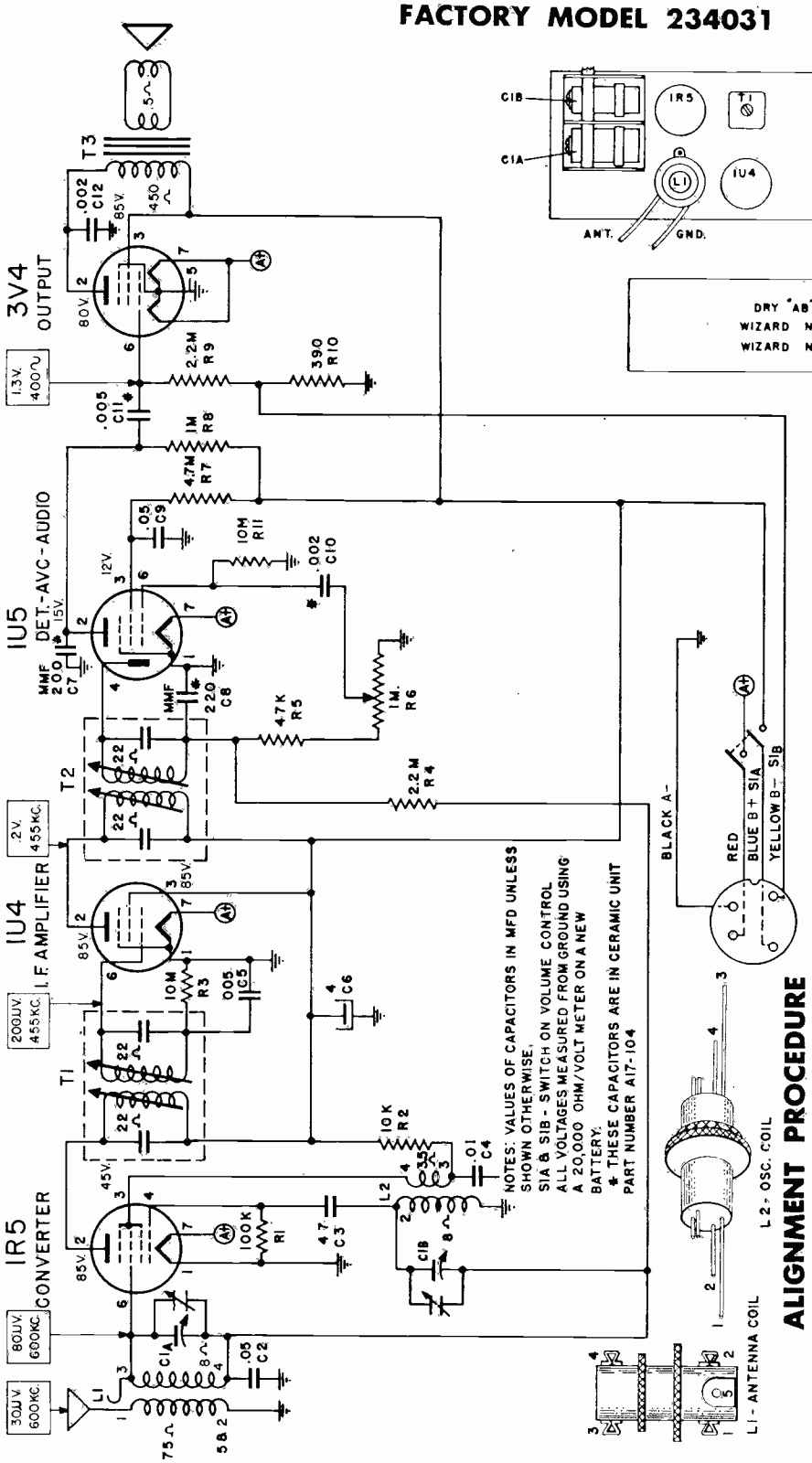

ALIGNMENT PROCEDURE

Position of Tuner	Generator Freq.	Dummy Antenna	Generator Connection	Adjustments (in order shown)	Function	Max. Microvolts Input to produce .05 w. output
Min. Cap.	455 kc	0.1 mfd.	Pin #6 of 1U4 I-F Amp.	T2 (top and bottom)	I.F.	5000
Min. Cap.	455 kc	0.1 mfd.	Pin #6 of 1R5 Conv.	T1 (top and bottom)	I.F.	100
Min. Cap.	1625 kc	0.1 mfd.	Stator ant. tuner	C2	Osc.	
1400 kc	1400 kc	200 mmfd.	Antenna lead	C1	Antenna coil	35

MANUAL OF 1952 MOST-OFTEN-NEEDED RADIO DIAGRAMS

WESTERN AUTO SUPPLY COMPANY

MODEL D-3210A

Factory Model 4P12-A

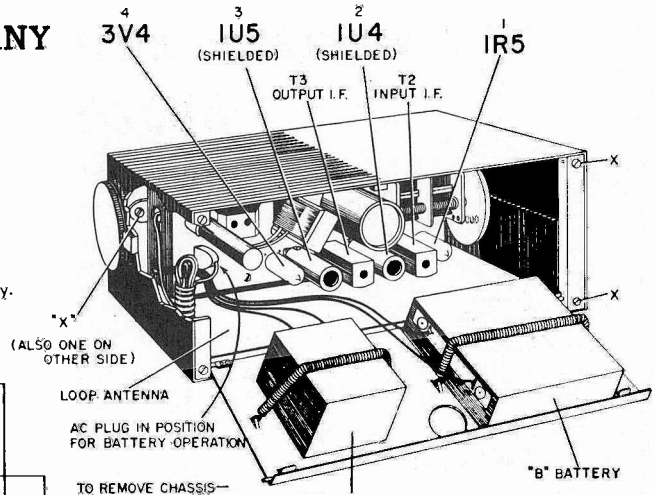

NOTE: R-13 is now 2650 ohms.
R-16 removed to increase sensitivity.

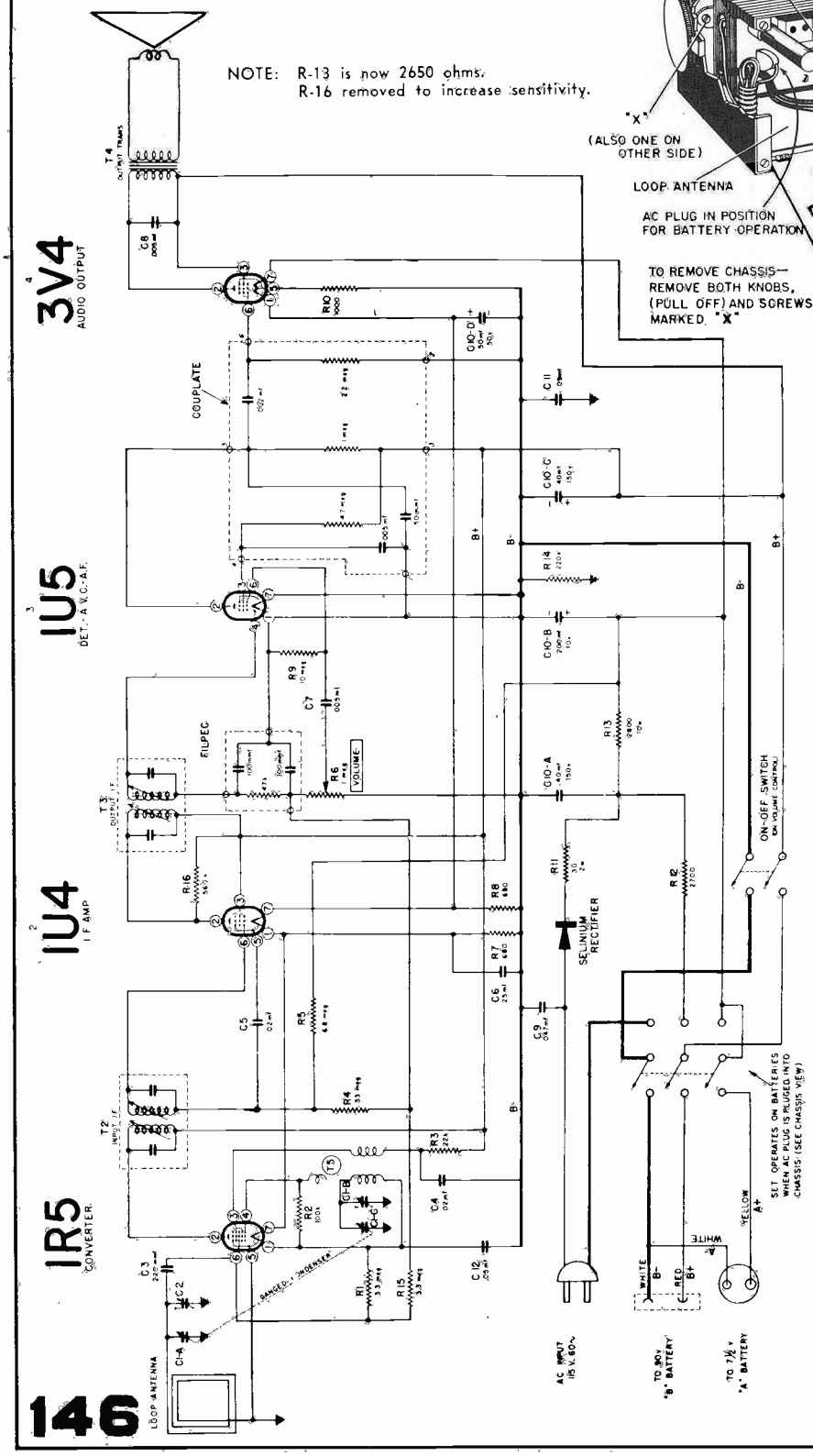

FREQUENCY	COUPLING CAPACITOR	DIAL SETTING	CONNECTION TO RADIO	GROUND CONNECTION	ADJUST	INPUT FOR 50 MILLIWATTS OUTPUT
455 kc.	.1 mfd.	1000 kc.	Pin No. 6 of 1R5	B— (shell of lytic)	I.F. slugs	100 microvolts
1620 kc.	.1 mfd.	1600 kc.	Pin No. 6 of 1R5	B— (shell of lytic)	C1-B Osc. Trim. on gang	—
1400 kc.	Radiation Loop	1400 kc.	Radiation loop	None	C-2 Antenna Trim. on gang	250 microvolts
400 cycles	.05 mfd.	—	Pin No. 6 of 1U5	B— (shell of lytic)	—	.040 volts
400 cycles	.05 mfd.	—	Pin No. 6 of 3V4	B— (shell of lytic)	—	3 volts

WESTERN AUTO SUPPLY COMPANY

Factory Model 4C11

MODEL D-4118

IF Alignment:

1. Connect the high side of the signal generator through a .10 mfd capacitor to pin 1 of the IF amplifier (6BA6) tube. Apply a 400 cycle 30% modulated carrier of 455 KC at about 5,000 microvolts.

2. Set the volume control at maximum and adjust the top and bottom core of the second IF transformer for maximum output as indicated on the output meter.

3. Connect the high side of the generator to pin 7 of the 6BE6 converter tube. Set the generator output at about 100 microvolts.

4. Adjust the top and bottom core of the first IF transformer for maximum reading.

RF Alignment:

1. Set the signal generator to 1620 KC at about 100 microvolts.

2. Turn the tuning control fully clockwise. (Gang open).

3. Adjust the oscillator trimmer on gang for maximum reading. See chassis view.

4. Connect the generator lead to the antenna input jack through a 50 mmf capacitor.

5. Set generator to 1400 KC. and tune in the receiver for maximum signal. Adjust the antenna trimmer for further increase in output level.

6. Tune receiver and generator to 600 KC. for maximum output and adjust antenna core (T-3) for further increase in output and best tracking. It may be necessary to repeat above procedure.

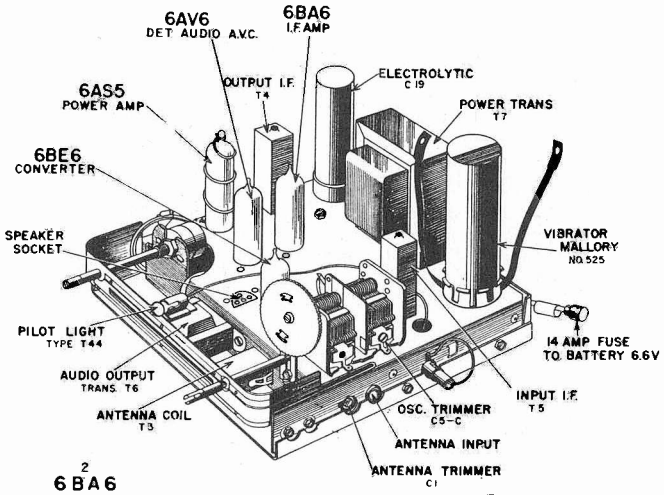

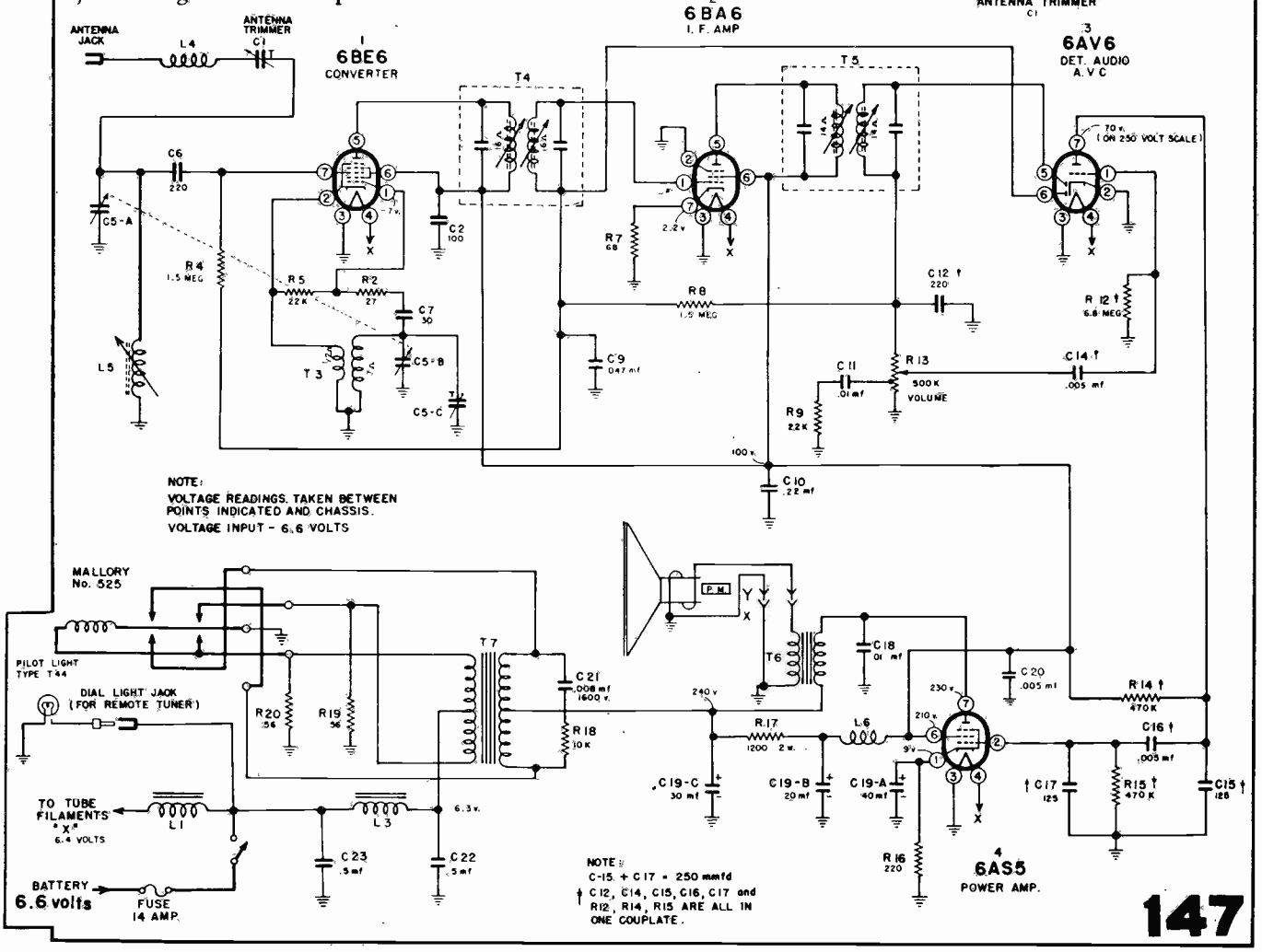

MANUAL OF 1952 MOST-OFTEN-NEEDED RADIO DIAGRAMS

WESTERN AUTO SUPPLY COMPANY

MODEL D4142A

Factory Model 25C23-11

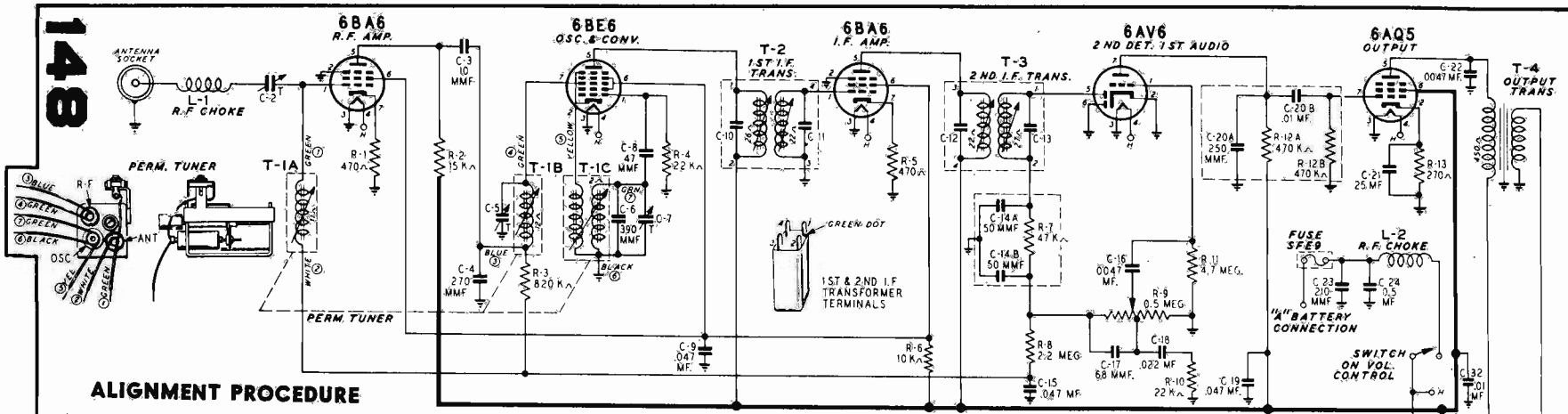

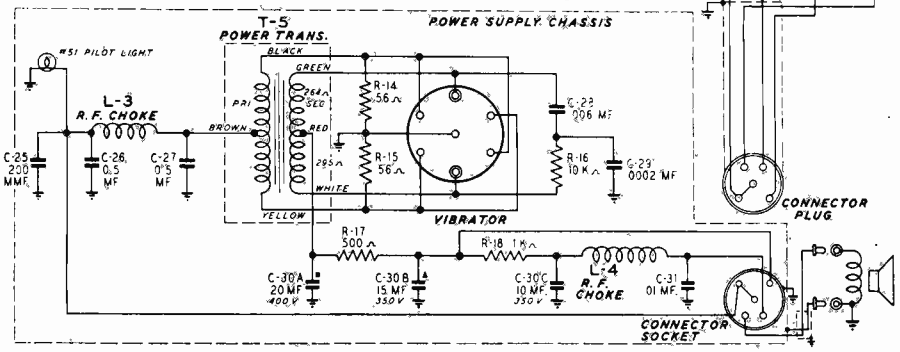

ALIGNMENT PROCEDURE

Volume Control—Maximum All Adjustments.
Connect Radio Chassis to Ground Post of Signal Generator with a Short Heavy Lead.
Allow Chassis and Signal Generator to "Heat Up" for several minutes.
The following equipment is required for aligning:

A Signal Generator which will provide an accurately calibrated signal at the test frequencies as listed.
Output Indicating Meter—Non-Metallic Screwdriver.
Dummy Antenna—.05 mf., See Note A.

SIGNAL GENERATOR FREQUENCY SETTING	SIGNAL GENERATOR CONNECTION AT RADIO	DUMMY ANTENNA	IRON CORE SETTING	ADJUST TUNING SLUGS (IF) AND TRIMMERS TO MAXIMUM (See Fig. 4)
I.F. 455 KC	Control Grid (prong No. 7) 6BE6 Mixer Tube	.05 mf.	Extreme Position out of Coil	1st I.F. Pri. (1) & Sec. (2) 2nd I.F. Pri. (3) & Sec. (4)
1605 KC	Antenna Coble See Note A	See Note A	Extreme Position out of Coil	Oscillator (C-7)
1605 KC	Antenna Cable	See Note A	Extreme Position out of Coil	R.F. (C-5) Ant. (C-2)

Reassemble Radio—Install in Car—Connect Car Antenna to Radio.

Car Antenna Readjustment—Tune in weak signal near 1600 KC—Readjust Antenna Trimmer C-2 for maximum output.

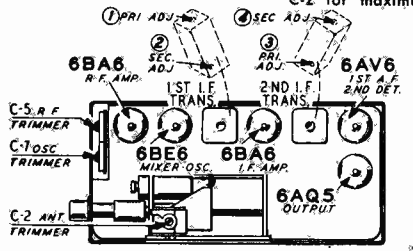

Fig. 4 — Tube Layout

NOTE A—Insert the antenna cable plug in the antenna socket on the chassis. The total capacity of the antenna cable and dummy antenna should be 60 mmf. If the cable, for example, has a capacity of 30 mmf., use a 30 mmf. condenser for a dummy antenna. Connect the other end of the antenna cable through the dummy antenna capacity to the output of the signal generator.

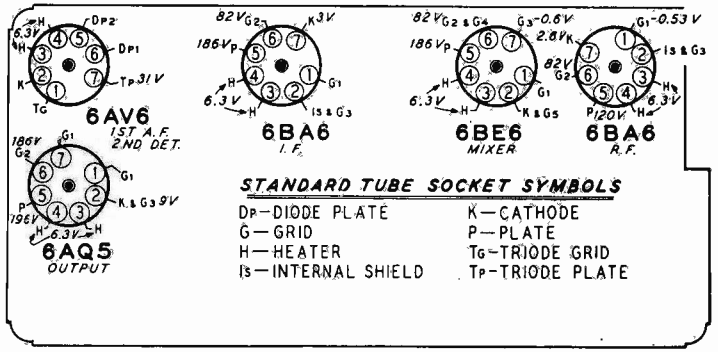

STANDARD TUBE SOCKET SYMBOLS

DP—DIODE PLATE	K—CATHODE
G—GRID	P—PLATE
H—HEATER	TG—TRIODE GRID
IS—INTERNAL SHIELD	TP—TRIODE PLATE

Voltages were measured between the indicated terminals and chassis ground. Plate, screen and cathode voltages were taken with a 1000 ohm-per-volt meter

Westinghouse Electric MODEL H-334T7UR—CHASSIS V-2136-5R

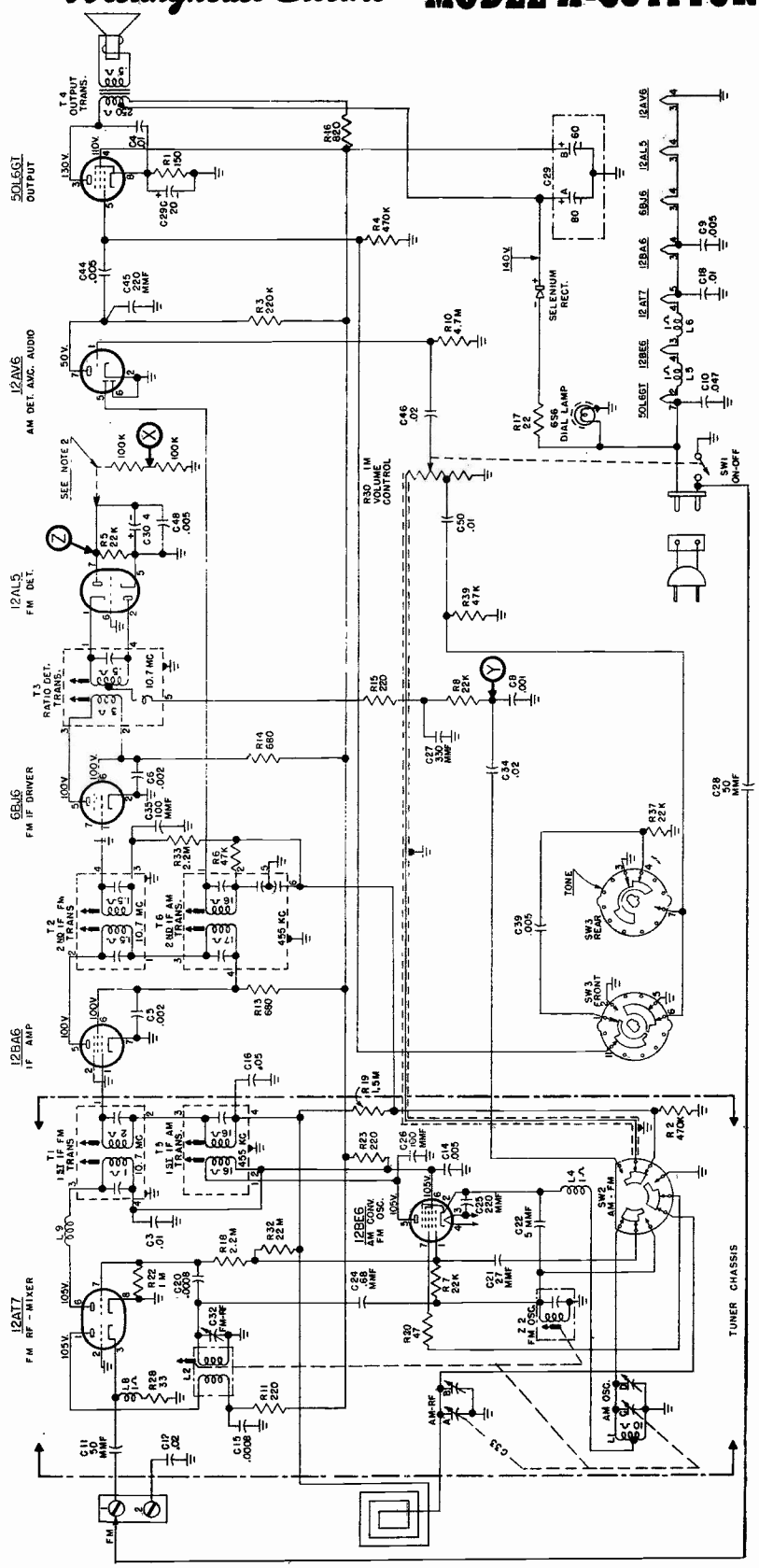

1. SELECTOR SWITCH SW2 IS SHOWN IN EXTREME CLOCKWISE POSITION OR AM BAND AS VIEWED FROM THE FRONT.
2. TO BE INSTALLED FOR ALIGNMENT ONLY.
3. SELECTOR SWITCH SW3 IS IN EXTREME COUNTER CLOCKWISE POSITION OR BASS POSITION AS VIEWED FROM THE FRONT.
4. ALL CAPACITANCE VALUES IN MFD AND ALL RESISTANCE VALUES IN OHMS UNLESS OTHERWISE SPECIFIED.
5. ALL VOLTAGES MEASURED FROM CHASSIS (GROUND) USING A 20,000 OHM/VOLT METER. LINE VOLTAGE SET AT 117 V.A.C. READINGS SHOULD BE AS SHOWN ± 20 PER CENT.

SCHEMATIC DIAGRAM OF V-2136-5R CHASSIS

The V-2136-5R chassis used in Model H-334T7UR is similar to the V-2136-5U described in the 1951 volume, on pages 149 and 150. However, there are enough differences to warrant the inclusion of this diagram of V-2136-5R in this manual. For alignment you should refer to such material on the V-2136-5U, on page 150, in the 1951 Radio manual, volume 11.

Westinghouse RADIO TELEVISION

MODELS H-368P5 AND H-369P5

Westinghouse Electric

CHASSIS V-2156-1U

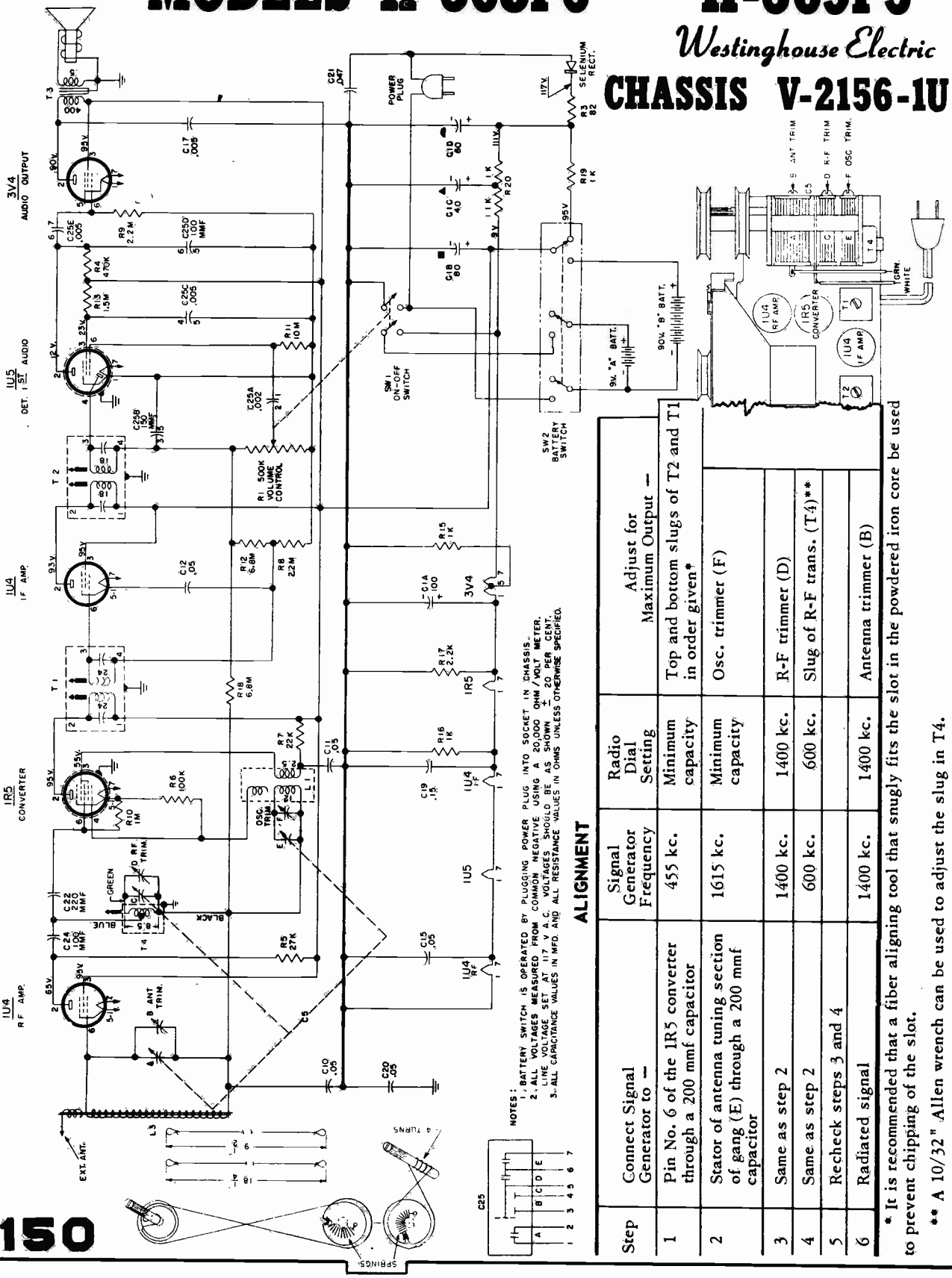

ALIGNMENT

Step	Connect Signal Generator to —	Signal Generator Frequency	Radio Dial Setting	Adjust for Maximum Output —
1	Pin No. 6 of the 1R5 converter through a 200 mmf capacitor	455 kc.	Minimum capacity	Top and bottom slugs of T2 and T1 in order given*
2	Stator of antenna tuning section of gang (E) through a 200 mmf capacitor	1615 kc.	Minimum capacity	Osc. trimmer (F)
3	Same as step 2	1400 kc.	1400 kc.	R-F trimmer (D)
4	Same as step 2	600 kc.	600 kc.	Slug of R-F trans. (T4)**
5	Recheck steps 3 and 4			
6	Radiated signal	1400 kc.	1400 kc.	Antenna trimmer (B)

* It is recommended that a fiber aligning tool that snugly fits the slot in the powdered iron core be used to prevent chipping of the slot.

** A 10/32" Allen wrench can be used to adjust the slug in T4.

Westinghouse Electric Corporation

CHASSIS V-2157-5

MODELS H-355T5 AND H-356T5

Additional similar sets with and without clock are:
Models H-359T5 and H-360T5, Chassis V-2157-6; Models H-365T5 and H-366T5, Chassis V-2157-7; Model H-367T5, Chassis V-2157-8; and Models H-374T5 and H-375T5, Chassis V-2157-9.

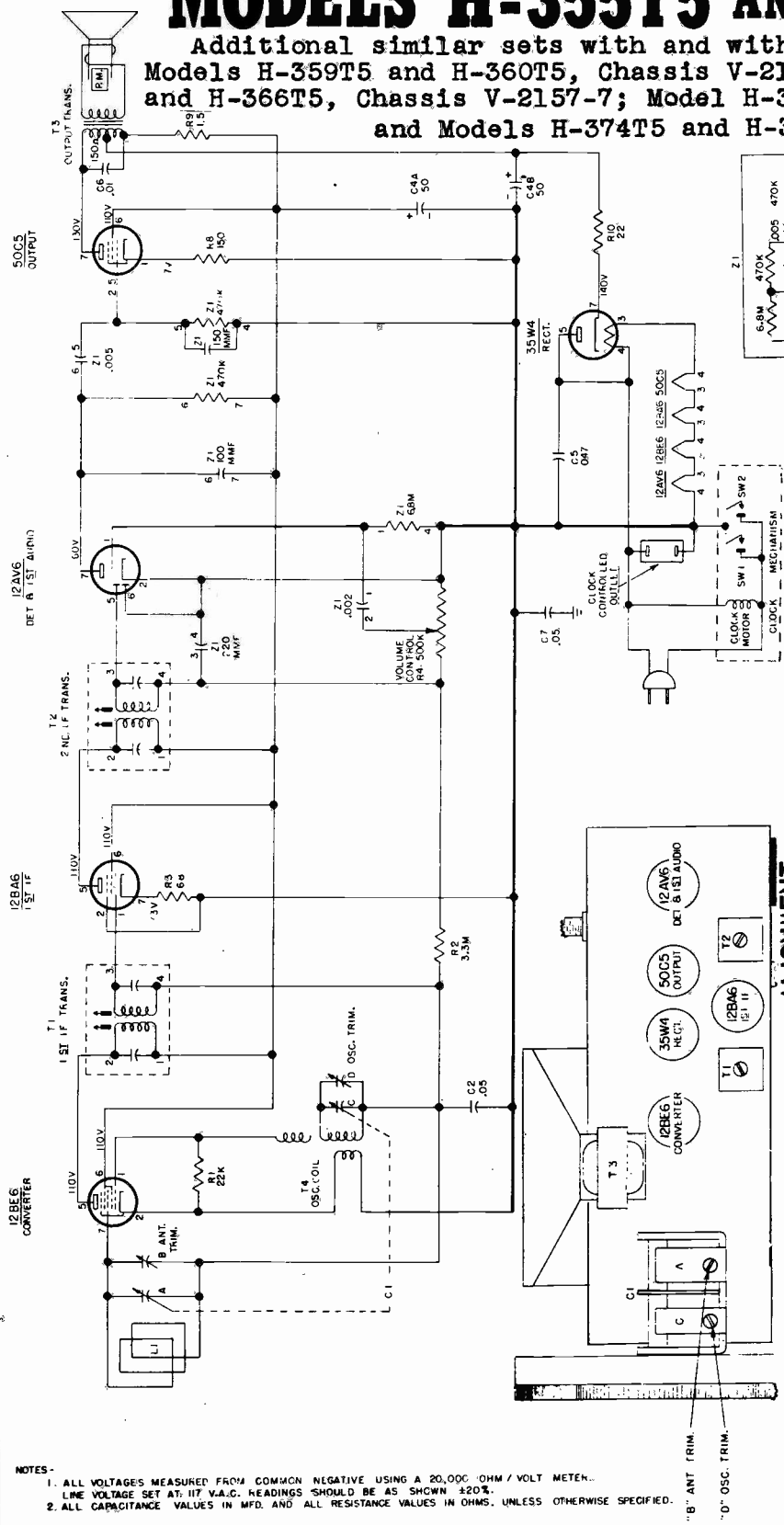

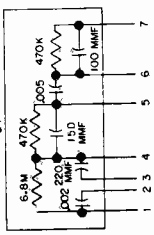

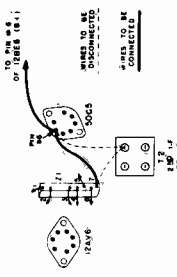

NOTES -
1. ALL VOLTAGES MEASURED FROM COMMON NEGATIVE USING A 20,000 OHM / VOLT METER. LINE VOLTAGE SET AT 117 V.A.C. READINGS SHOULD BE AS SHOWN ±20%.
2. ALL CAPACITANCE VALUES IN MFD. AND ALL RESISTANCE VALUES IN OHMS. UNLESS OTHERWISE SPECIFIED.

Make certain that the dial pointer is correctly positioned.

While making the following adjustments, keep the volume control set for maximum output and the signal generator output attenuated to avoid AVC action.

Step	Connect Signal Generator to —	Signal Generator Frequency	Radio Dial	Adjust for Maximum Output —
1.	Stator of ant. tuning capacitor (A) through a 200 mmf capacitor	455 kc.	Minimum capacity	Top and bottom slugs of T2 and T1 in order given*
2.	Same as step 1	1615 kc.	Minimum capacity	Oscillator trimmer (D)
3.	Radiated signal	1400 kc.	1400 kc.	Antenna trimmer (B)

**It is recommended that a fiber aligning tool that snugly fits the slot in the powdered iron core be used to prevent chipping of the slot.*

MODELS H-331P4U & H-333P4U

CHASSIS V-2164U

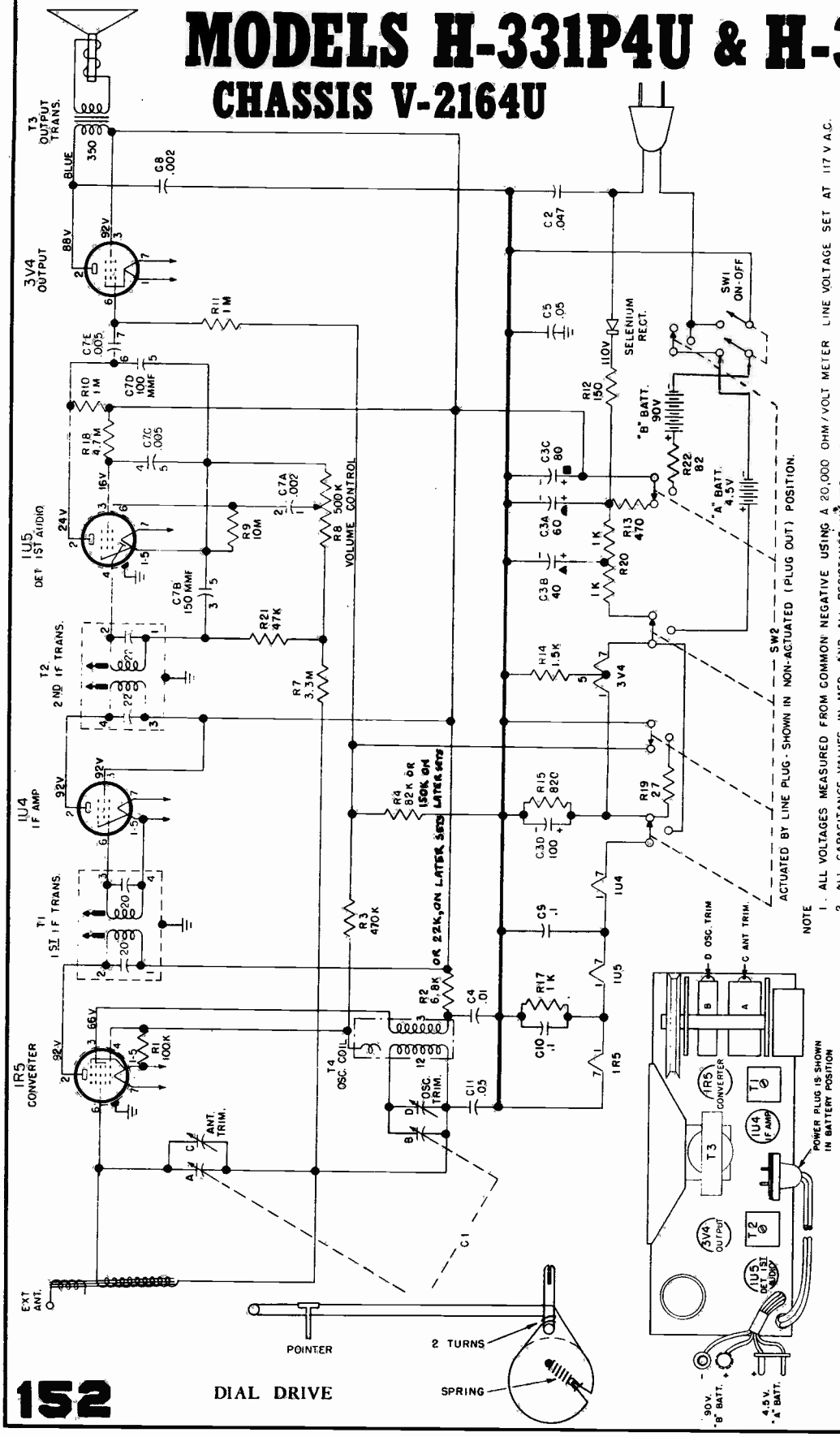

NOTE
1. ALL VOLTAGES MEASURED FROM COMMON NEGATIVE USING A 20,000 OHM/VOLT METER LINE VOLTAGE SET AT 117 V A.C.
2. ALL CAPACITANCE VALUES IN MFD. AND ALL RESISTANCE VALUES IN OHMS UNLESS OTHERWISE SPECIFIED.

ALIGNMENT

Step	Connect Signal Generator to —	Signal Generator Frequency	Radio Dial	Adjust for Maximum Output —
1	Stator of R-F tuning capacitor (A) through a 0.1 mfd	455 kc.	minimum capacity	Top and bottom slugs in 2nd and 1st I-F trans. in order given
2	Same as step 1	1615 kc.	minimum capacity	Osc. trimmer (D)
3	Radiated Signal	1400 kc.	1400 kc.	Ant. trimmer (C)

Westinghouse

CHASSIS V-2180-1

MODELS H-350T7 AND H-351T7

Models H-370T7 and H-371T7, Chassis V-2180-8, are similar.

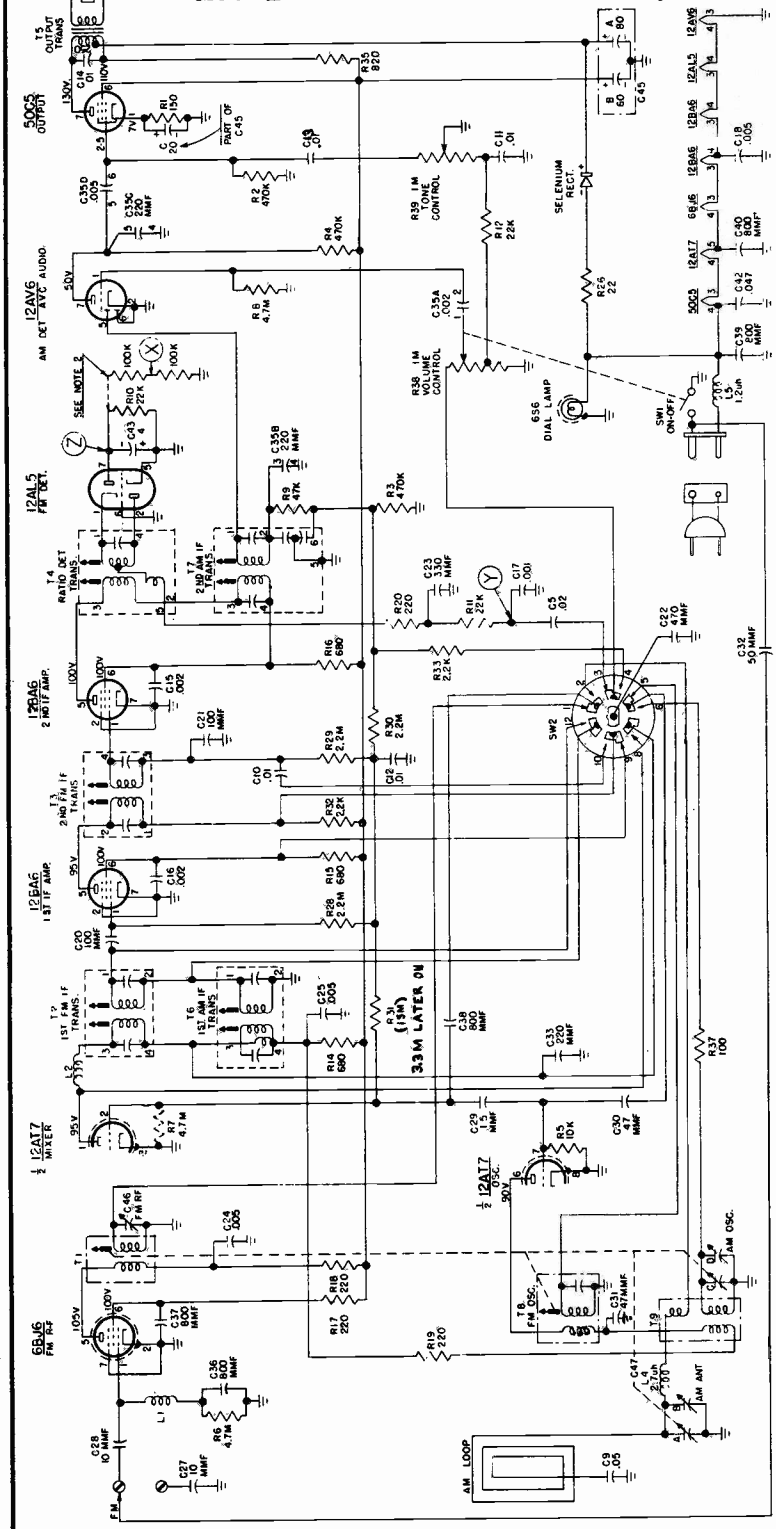

In later production, these models used Chassis V-2180-7 or V-2180-7S, which are very similar to the circuit shown. Model H-354C7 is a phono-combination using Chassis V-2180-2 with a 50L6GT output tube, but similar to the circuit on this page. Model H-357C10 combination employs Chassis V-2180-5 with an AC power supply, but other parts of the circuit are similar to the one shown on this page. The alignment on the next page is applicable to all these sets.

The following changes are incorporated in later production of the V-2180-1 chassis:

To reduce hum modulation on strong signals, C36 located in the grid circuit of the 6BJ6 FM RF amplifier is changed to .005 mfd, C38 connected between the grid of the 12AT7 mixer stage and the selector switch (SW2) is changed to .005 mfd, C10 connected from terminal #3 of the 2nd FM IF transformer (T3) to the selector switch (SW2) is changed to 800 mmf, and R29 connected between terminal #3 of the 2nd FM IF transformer (T3) and the AVC line is changed to 10,000 ohms.

An 800 mmf capacitor (C62) is added between the shaft of the selector switch (SW2) and ground to reduce local oscillator radiation

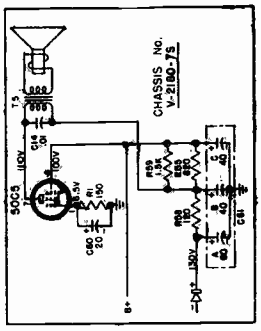

Differences in audio output and power supply circuit of V-2180-7S.

Westinghouse Electric, Models H-350T7 and H-351T7, Chassis V-2180-1

ALIGNMENT

BROADCAST BAND

Connect an output meter across the speaker voice coil.

While making the following adjustments, keep the volume control set for maximum output and the signal generator output attenuated to avoid AVC action.

Check the dial pointer position by meshing the tuning capacitor plates completely and seeing that the dial pointer is set on the end mark of the dial scale.

Step	*Connect Signal Generator to —*	*Signal Generator Frequency*	*Radio Dial Setting*	*Adjust*
1	Set the band switch to AM			
2	Stator of tuning capacitor (A) through a 0.1 mfd capacitor	455 kc.	minimum capacity	Pri. and sec. of T7 and T6 for max. output in order given
	NOTE: If the I-F transformers are badly mis-aligned, it may be impossible to obtain sufficient output using the above system. In this event, it will be necessary to align each transformer separately. Start with the last I-F transformer and work forward, connecting the signal generator to the control grid of the tube preceding the transformer under alignment.			
3	Radiated signal (no actual connection)	1615 kc.	minimum capacity	AM osc. trimmer (D) for max. output
4	Radiated signal (no actual connection)	1400 kc.	tune to signal	AM ant. trimmer (B) for max. output (rock-in) adjustment)

FM BAND

Do not align the FM circuits until all AM adjustments have been completed.

Step	*Connect Signal Generator to —*	*Signal Generator Frequency*	*Radio Dial Setting*	*Adjust*
1	Set the band switch to FM			
2	Connect two 100,000 ohm resistors (the resistances must be equal within 5 per cent) between pin No. 7 of the 12AL5 tube and ground as shown on the schematic diagram.			
3	Connect a V.T.V.M. between points "X" and "Y" (see schematic diagram).			
4	Pin No. 2 of 12AT7 through a 0.1 mfd mica capacitor	10.7 mc.	minimum capacity	Sec. of T4 for *zero* (use medium strength signal)
5	Connect the V.T.V.M. between point "Z" and ground.			
6	Same as step 4	10.7 mc.	minimum capacity	Pri. of T4 and pri. and sec. of T3 and T2 for maximum voltage
7	Reconnect the V.T.V.M. between points "X" and "Y" and increase the signal strength 10 times.			
8	Same as step 4	10.7 mc.	minimum capacity	Recheck sec. of T4 for *zero* voltage
9	Reconnect the V.T.V.M. between point "Z" and ground.			
10	Same as step 4	10.7 mc.	min. cap.	Pri. of T4 for maximum voltage
11	Remove the two 100,000 ohm resistors that were inserted in step 2.			
12	FM ant. terminal through a 300 ohm non-inductive resistor	98 mc.	98 mc.	FM osc. core for maximum voltage
13	Same as step 12	98 mc.	98 mc.	FM R-F trimmer (C46) for maximum voltage
14	Same as step 12	105 mc.	tune to signal	FM R-F core for maximum voltage
15	Same as step 12	90 mc.	tune to signal	FM R-F trimmer (C46) for maximum voltage (rock-in)
16	Recheck steps 14 and 15 for tracking.			

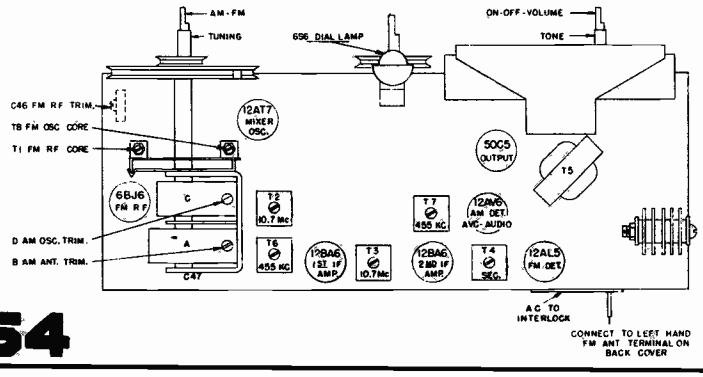

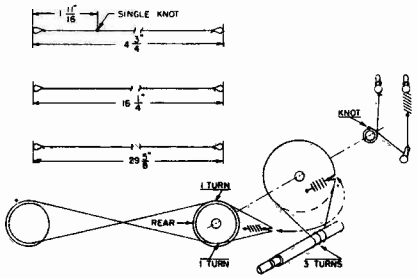

Westinghouse Electric Corporation.

Models H-372P4, H-373P4, H-376P4, Chassis V-2182-1

MODEL H-377 AC POWER SUPPLY

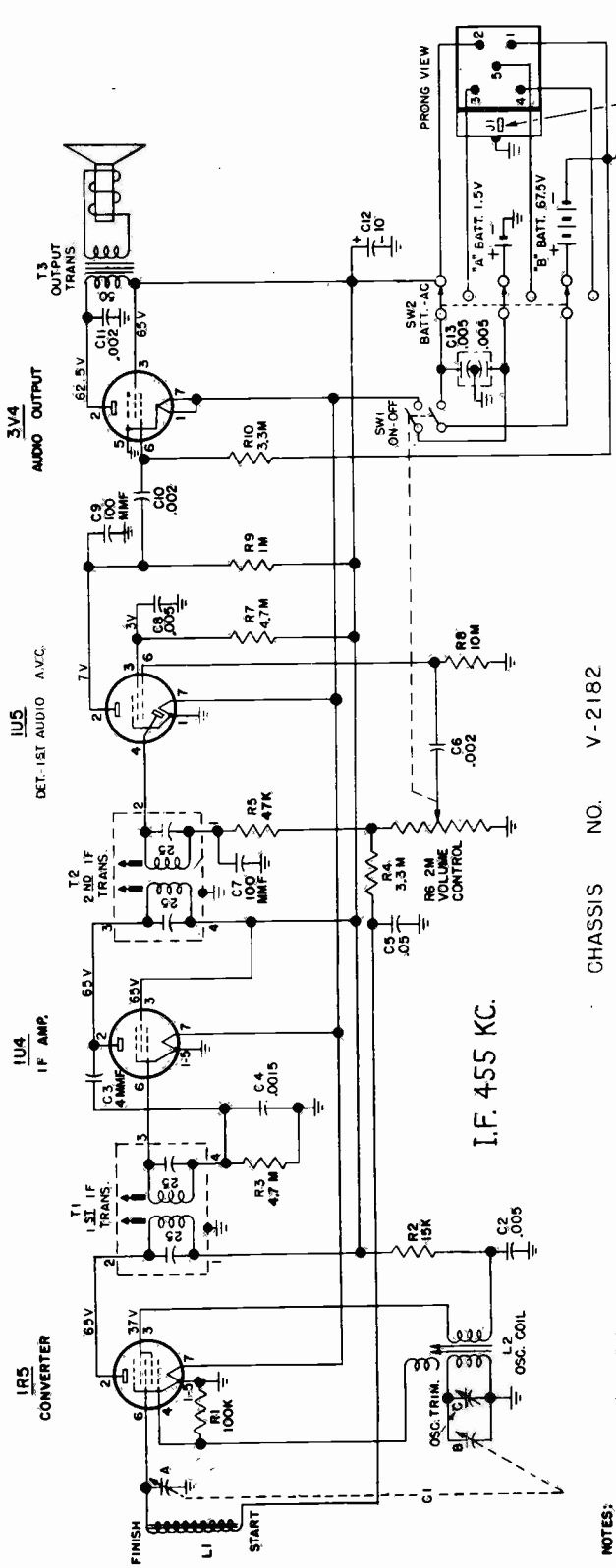

NOTES:
1- ALL CAPACITANCE VALUES IN MFD. AND ALL RESISTANCE VALUES IN OHMS UNLESS OTHERWISE SPECIFIED.
2- ALL VOLTAGES MEASURED FROM CHASSIS (GND.) USING A 20,000 OHM/VOLT METER. VOLTAGES SHOWN ARE BATTERY READINGS AND SHOULD BE ± 20 PER CENT. AUXILIARY POWER SUPPLY WILL INCREASE VOLTAGE READINGS APPROX. 20%
3- WHEN AUXILIARY POWER SUPPLY (H-377) IS USED, PLUGGING P51 INTO J1 ACTUATES SW2 BATTERY-AC SWITCH.

FIG. 1 — SCHEMATIC DIAGRAM OF V-2182-1 CHASSIS AND H-377 AC POWER SUPPLY.

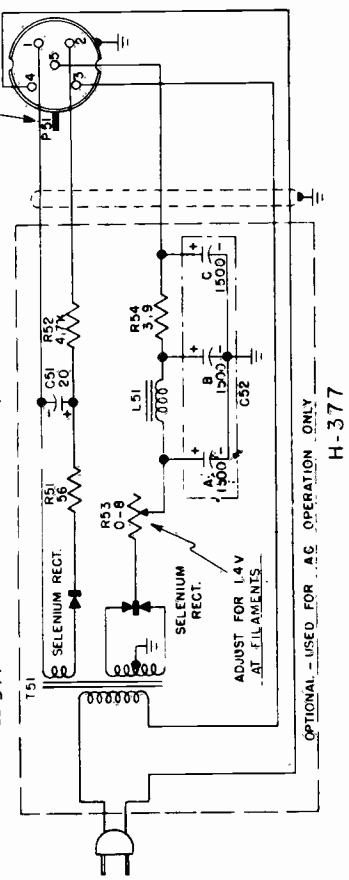

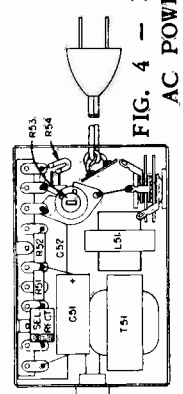

FIG. 4 — MODEL H-377 AC POWER SUPPLY

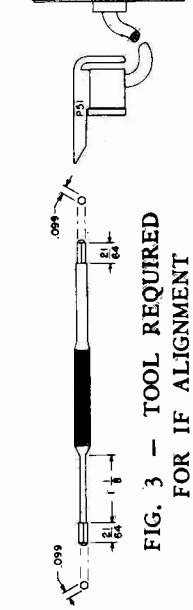

FIG. 3 — TOOL REQUIRED FOR IF ALIGNMENT

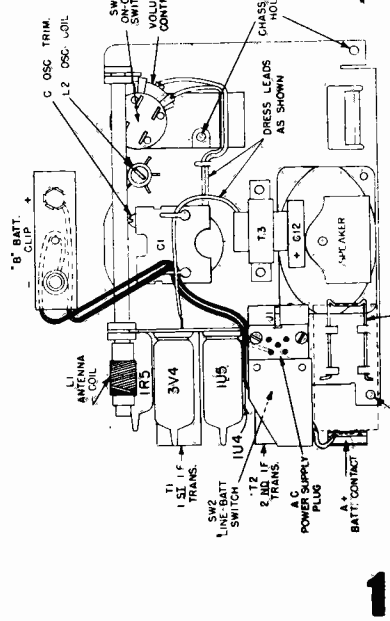

FIG. 2 — REAR VIEW OF V-2182-1 CHASSIS

MANUAL OF 1952 MOST-OFTEN-NEEDED RADIO DIAGRAMS

Westinghouse Electric Corporation

Model H-361T6, Chassis V-2181-1

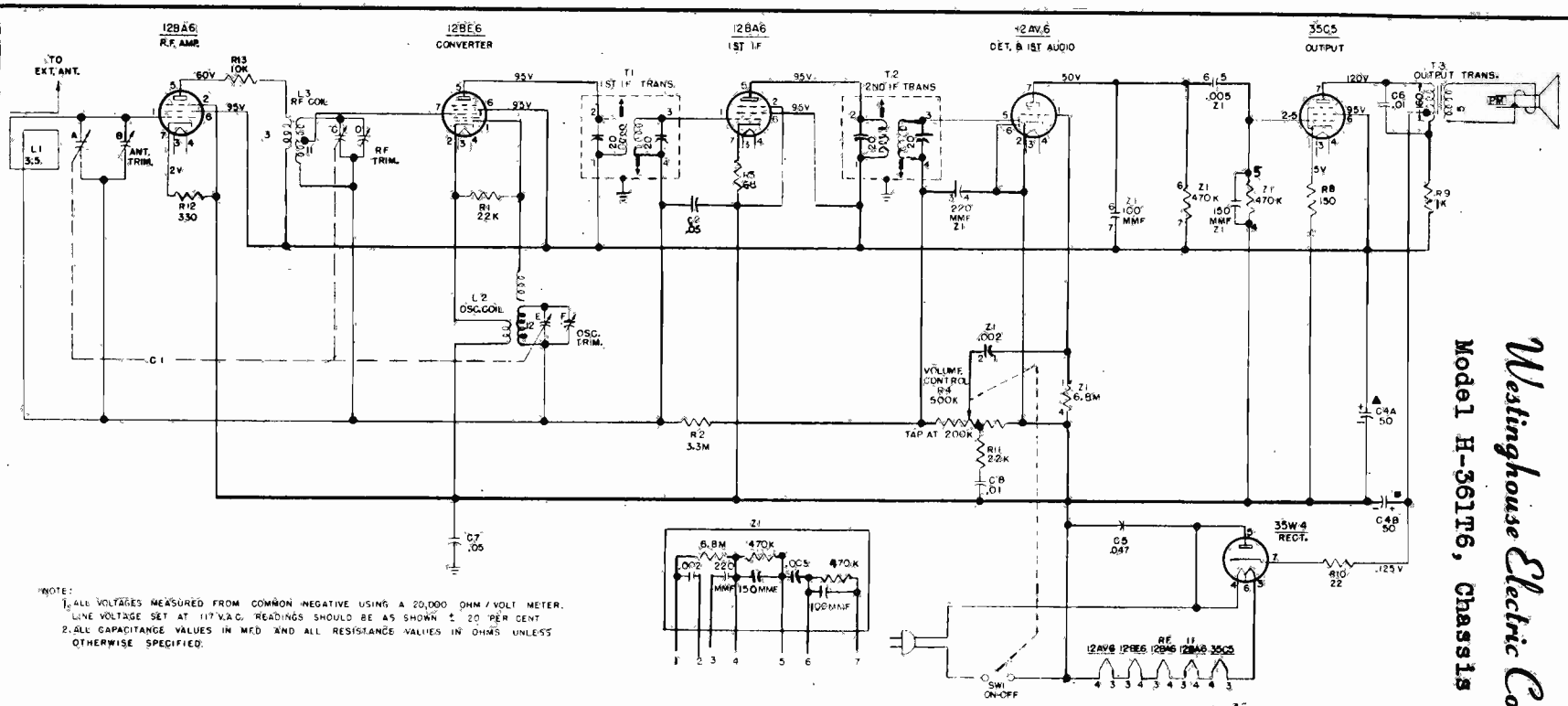

ALIGNMENT

It is recommended that the chassis be isolated from the power line by means of an isolation transformer.

Make certain that the dial pointer is correctly positioned.

While making the following adjustments, keep the volume control set for maximum output and the signal generator output attenuated to avoid AVC action.

Step	*Connect Signal Generator to —*	*Signal Generator Frequency*	*Radio Dial*	*Adjust for Maximum Output —*
1	Pin #7 of the 12BE6 through a 200 mmf capacitor	455 kc.	minimum capacity	Top and bottom slugs of T2 and T1 in order given*
2	Stator of ant. tuning capacitor (A) through a 200 mmf capacitor	1615 kc.	minimum capacity	Oscillator trimmer (F)
3	Same as step 2	1400 kc.	1400 kc.	R-F trimmer (D)
4	Radiated signal	1400 kc.	1400 kc.	Antenna trimmer (B)

**It is recommended that a fiber aligning tool that snugly fits the slot in the powdered iron core be used to prevent chipping of the slot.*

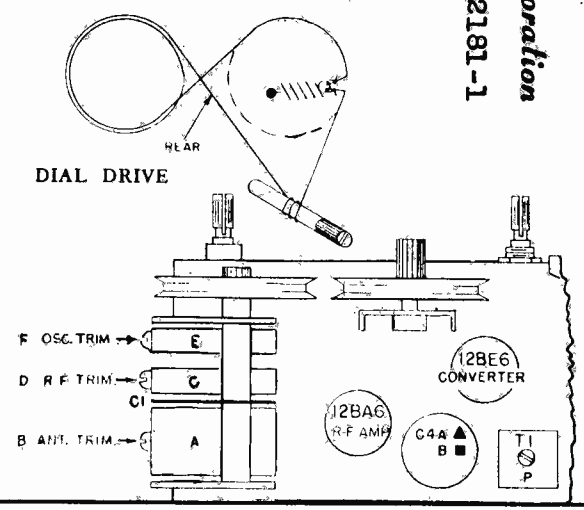

MODEL H615Z1 CHASSIS 6G05Z1

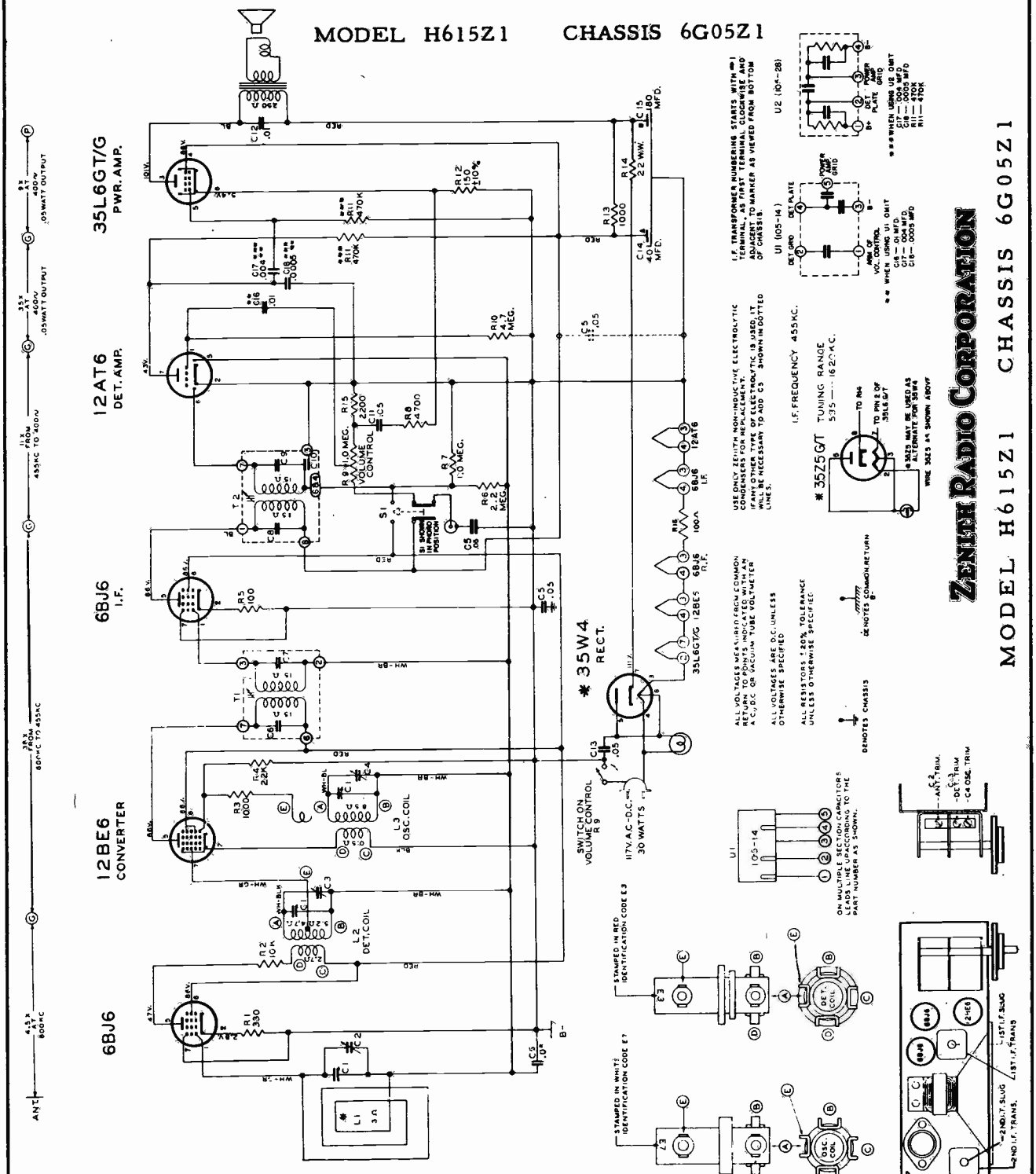

ALIGNMENT PROCEDURE

OPERATION	CONNECT OSCILLATOR TO	DUMMY ANTENNA	INPUT SIG. FREQUENCY	SET DIAL AT	TRIMMERS	PURPOSE
1	Convertor Grid	.5 Mfd	455 Kc.	600 Kc.	Adjust Primary & Secondary Slugs	For I.F. Alignment
2	Single Turn Loosely Coupled to Wave Magnet	--	1600 Kc.	1600 Kc.	C-4	Set Oscillator to Dial Scale.
3		--	1400 Kc.	1400 Kc.	C-3	Detector Alignment
4		--	1400 Kc.	1400 Kc.	C-2	Antenna Alignment

ZENITH RADIO CORPORATION

(Also see next page).

MODEL H401 CHASSIS 4H40

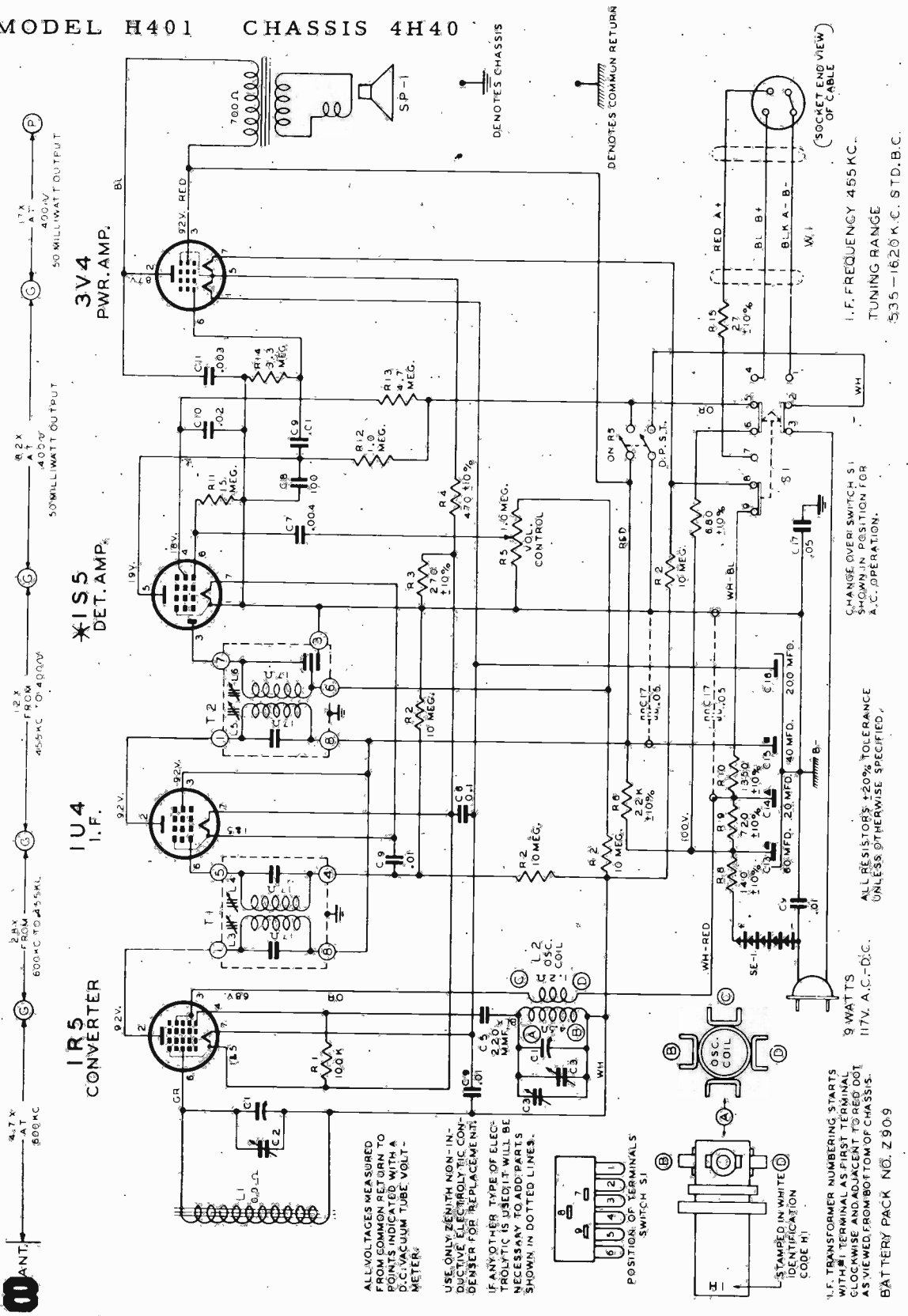

Further information and alignment instructions are on the adjacent page.

Zenith Model H401, Chassis 4H40, continued from previous page.

The 4H40 chassis is an AC, DC or battery operated superheterodyne. The chassis is isolated from the DC circuit, and all measurements must be made from a common negative point. The most convenient place to reach this negative point is the negative side or container of the electrolytic. When the change-over Switch S1 is in AC position, the DC resistance from chassis to any circuit must be almost infinite. If any circuit becomes grounded a hum will result. Microphonic tubes will cause audio howl. Check the 1R5 and 1S5.

If the R.F. becomes weak or dead, check the DC resistance of the wavemagnet. This DC resistance should be approximately .9 ohm. If it is open check the wavemagnet.

IF Alignment: Remove the chassis from the cabinet and arrange the units so that the wavemagnet can be connected. All the connections and adjustments can be made from the top of the chassis. Connect a signal generator, through a .1 mfd. dummy antenna, to the converter grid and B-(common return). Connect an output meter across the voice coil of the speaker (two lugs provided). Set the signal generator to 455 Kc. and adjust L3, L4, L5 and L6 for the maximum indication on the output meter. Always keep the signal output from the generator just high enough to get an indication, otherwise excessive loading may result.

RF Alignment: Connect a two turn loop across the leads of the signal generator, loosely couple this loop to the wavemagnet. Set the signal generator and the dial pointer of the receiver to 1600 Kc. and adjust C3 oscillator trimmer to resonance. Set the signal generator and dial pointer to 1400 and adjust C2 antenna trimmer to resonance. These trimmers are on the top of gang condenser. Check operation and reinstall set in cabinet. Tune in a weak station near 1400 Kc. or use background noise and readjust antenna trimmer for maximum sensitivity.

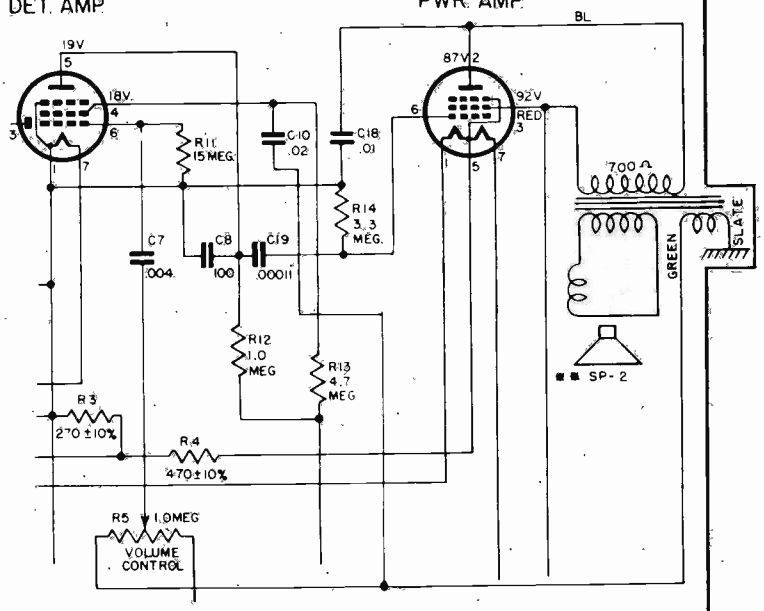

** WHEN SP-2 IS USED C-18 AND C-19 MUST ALSO BE USED.

The I.F. transformers incorporated in this receiver are of the new permeability tuned type. The advantage of an I.F. transformer of this type is its extreme stability under various humidity and temperature conditions. The upper coil is the secondary and the lower the primary. When adjusting these I.F. transformers the tuning wrench 68-19 can be inserted into the top slug, rotated until maximum output is obtained and then dropped down to the lower slug and the same operation repeated. The tuning wrench is so designed that turning one slug does not affect the adjustment of the other.

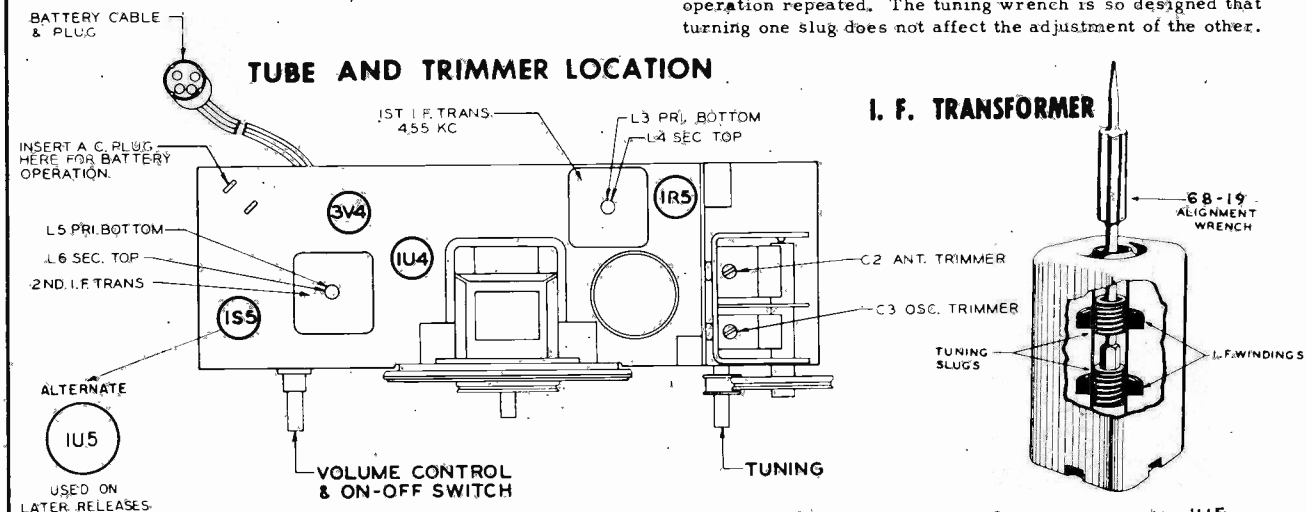

OPERATION	CONNECT OSCILLATOR TO	DUMMY ANTENNA	INPUT SIG. FREQUENCY	BAND	SET DIAL TO	TRIMMERS	PURPOSE
1	Converter Grid	.1 Mfd	455 Kc.	BC	600 Kc.	L3, 4, 5 & 6	I.F. Alignment
2	Two turns loosely coupled to Wavemagnet		1600 Kc.	BC	1600 Kc.	Osc. Trim. C3	Set Oscillator to scale
3	Two turns loosely coupled to Wavemagnet		1400 Kc.	BC	1400 Kc.	Ant. Trim. C2	Align Wavemagnet

* 1U5

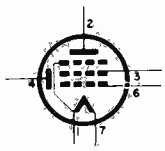

USED ON LATER RELEASES

MANUAL OF 1952 MOST-OFTEN-NEEDED RADIO DIAGRAMS

Zenith Radio Corp. MODEL H503 CHASSIS 5H41

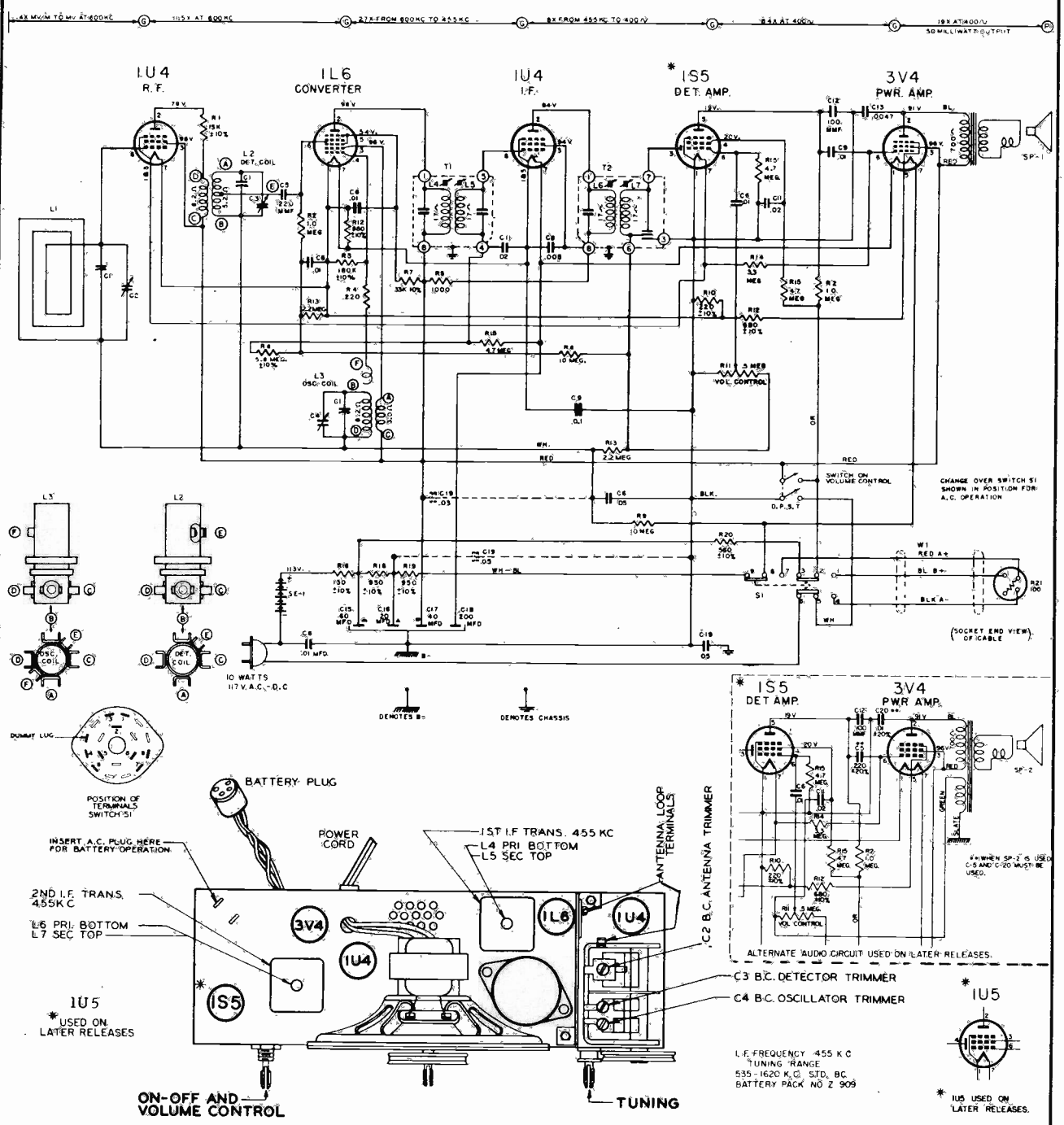

USE ONLY ZENITH NON-INDUCTIVE ELECTROLYTIC CONDENSER FOR REPLACEMENT. IF ANY OTHER TYPE OF ELECTROLYTIC IS USED IT WILL BE NECESSARY TO ADD PARTS SHOWN IN DOTTED LINES.

I.F. TRANSFORMER NUMBERING STARTS WITH #1 TERMINAL AS FIRST TERMINAL CLOCKWISE AND ADJACENT TO MARKER AS VIEWED FROM BOTTOM OF CHASSIS

ALL VOLTAGES MEASURED FROM COMMON RETURN TO POINTS INDICATED WITH A D.C. VACUUM TUBE VOLTMETER

ALL RESISTORS ±20% TOLERANCE UNLESS OTHERWISE SPECIFIED.

OPERATION	CONNECT OSCILLATOR TO	DUMMY ANTENNA	INPUT SIG. FREQUENCY	BAND	SET DIAL TO	TRIMMERS	PURPOSE
1	Converter Grid	.1 Mfd	455 Kc.	BC	600 Kc.	L4, 5, 6 & 7	I.F. Alignment
2	Two turns loosely coupled to Wavemagnet		1600 Kc.	BC	1600 Kc.	Osc. Trim. C4	Set Oscillator to scale
3	Two turns loosely coupled to Wavemagnet		1400 Kc.	BC	1400 Kc.	Ant. & Det. Trims. C2 & C3	Align Wavemagnet

MANUAL OF 1952 MOST-OFTEN-NEEDED RADIO DIAGRAMS

Zenith Radio Model H724Z2, Chassis 7H02Z2 (H724Z1, 7H02Z1 are similar)

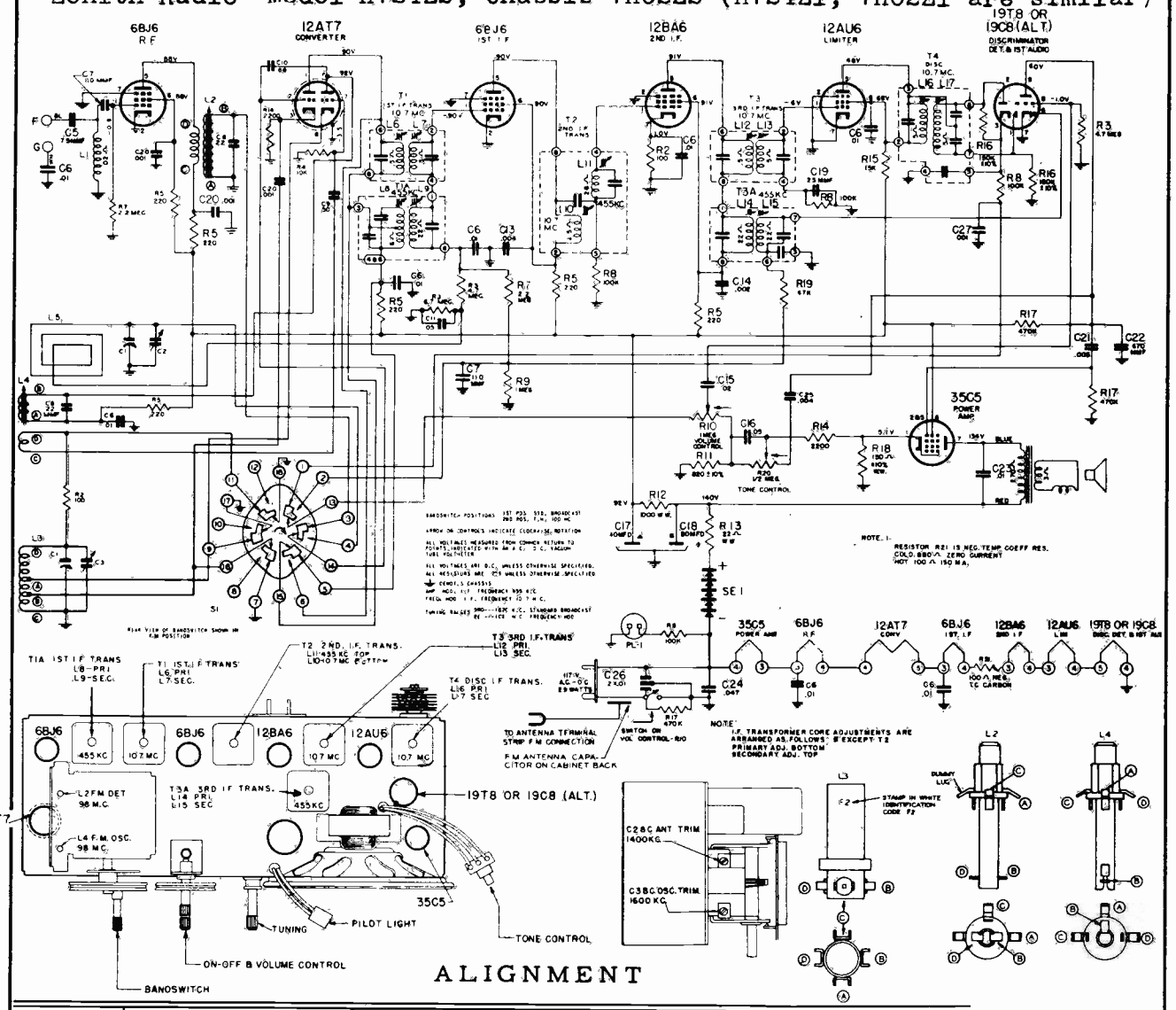

ALIGNMENT

Operation	Connect Oscillator to	Dummy Antenna	Input Signal Frequency	Band	Set Dial	Adj. Trimmers
1	Pin 2 12AT7 Converter	.05 Mfd.	455 Kc. Modulated	BC	600 Kc.	L8, 9,11,14,15
2	2 turns loosely cpld. to wavemagnet		1600 Kc. Modulated	BC	1600 Kc.	C3
3	2 turns loosely cpld. to wavemagnet		1400 Kc. Modulated	BC	1400 Kc.	C2
4 (a)	Pin 1 (grid) on 12AU6 limiter.	.05 Mfd.	10.7 Mc. Unmodulated	FM 100		L16 coil slug Primary discr.
5 (b)	Pin 1 (grid) on 12AU6 limiter	.05 Mfd.	10.7 Mc. Unmodulated	FM 100		L17 coil slug sec. of discr.
6 (c)	Pin 1 (grid) on 12BA6 2nd IF.	.05 Mfd.	10.7 Mc. Unmodulated	FM 100		L12 and L13 Prim. and Sec. of 3rd IF trans.
7 (c)	Pin 1 (grid) on 6BJ6 1st IF.	.05 Mfd.	10.7 Mc Unmodulated	FM 100		L10 Prim. of 2nd IF transformer
8 (c)	Pin 2 (grid) on 12AT7 converter tube socket.	.05 Mfd.	10.7 Mc Unmodulated	FM 100		L6 and L7 Prim. and Sec. of 1st IF transformer
9 (c)	Antenna Post FM (Remove line ant.)	270 ohms	98 Mc. Unmodulated	FM 100	98 Mc	L4 Osc. Coil Slug
10 (c) (d)		270 ohms	98 Mc. Unmodulated	FM 100	98 Mc	L2 Det. Coil Slug

ZENITH Models: H723Z1, & H723Z2, Chassis: 7H04Z1, & 7H04Z2 are similar to circuit on this page. Also similar are Models: J733, J733G, J733R, and J733Y, using Chassis 7J03 clock-radio.

MANUAL OF 1952 MOST-OFTEN-NEEDED RADIO DIAGRAMS

Zenith Radio Corp. MODEL J402 CHASSIS 4J40

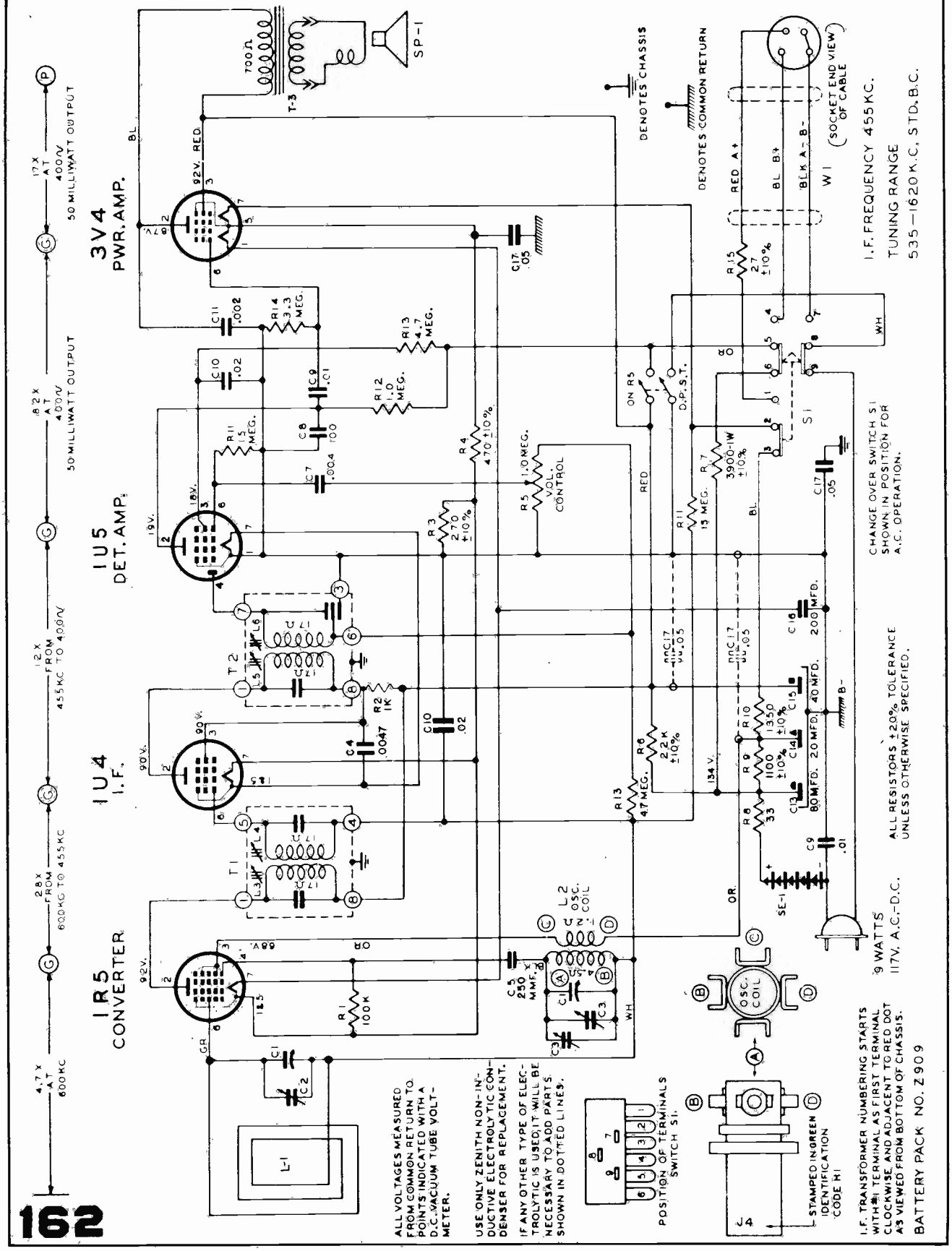

MANUAL OF 1952 MOST-OFTEN-NEEDED RADIO DIAGRAMS

Zenith Radio Corp. MODEL J514 CHASSIS 5J03

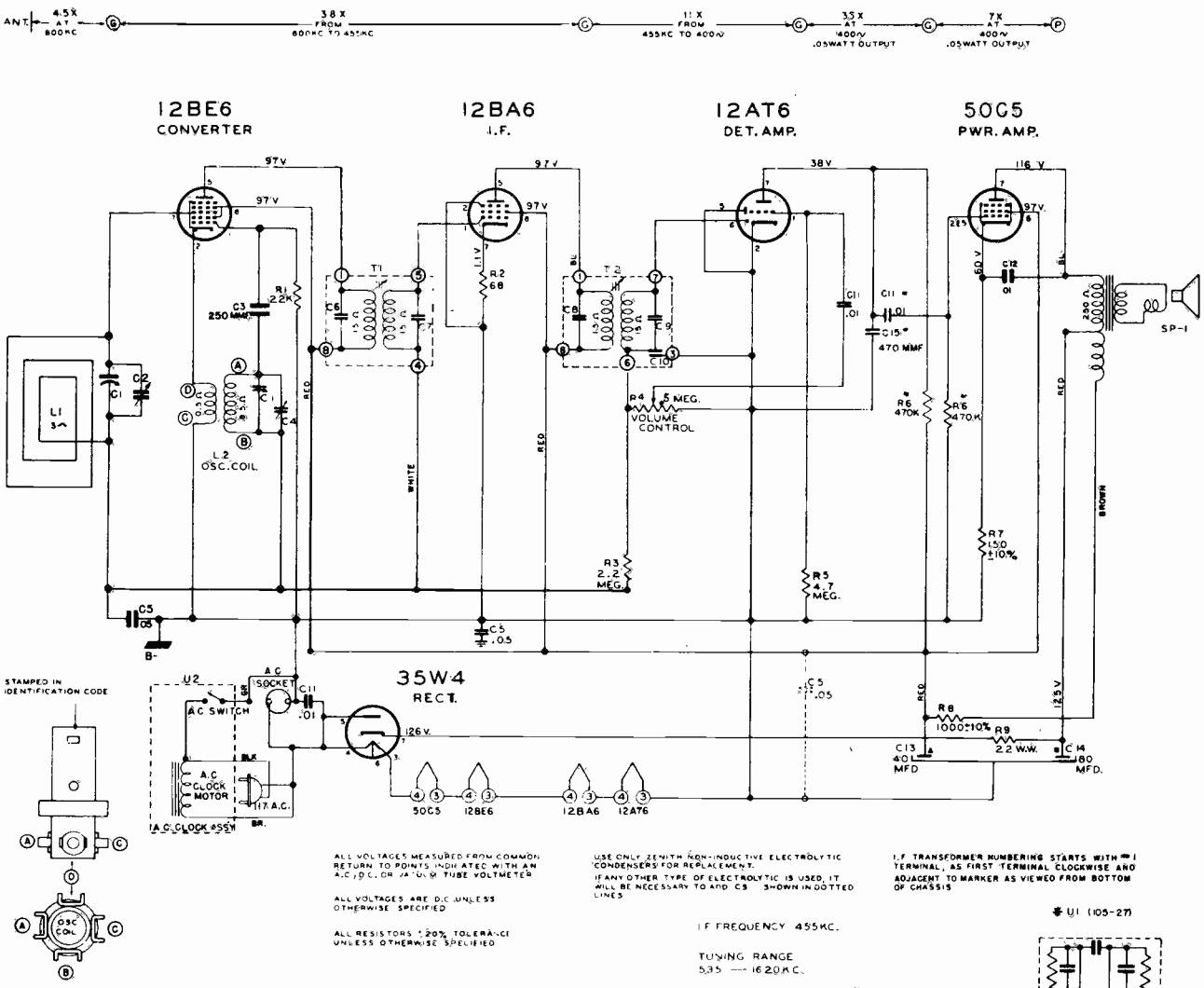

To remove the clock from the cabinet proceed as follows:

1. Remove the three 6/32 hex nuts that fasten the rear clock cover to the clock.
2. Slide the rear clock cover off the time set control shaft.
3. Remove the three hex washer head screws which mount the clock in cabinet.
4. Next unsolder the three-wire cable from the clock motor and switch. Be certain not to tear out the solder terminals from the clock motor or switch.

ALIGNMENT PROCEDURE

OPERATION	CONNECT OSCILLATOR TO	DUMMY ANTENNA	INPUT SIG. FREQUENCY	SET DIAL AT	TRIMMERS	PURPOSE
1	Converter Grid	.5 Mfd.	455 Kc.	600 Kc.	Adjust Primary & Secondary Slugs.	For I. F. Alignment
2	One Turn Loop Coupled Loosely to Wave Magnet	---	1600 Kc.	1600 Kc.	C-3	Set Oscillator to Dial Scale
3		---	1400 Kc.	1400 Kc.	C-2	Align Antenna Stage

MANUAL OF 1952 MOST-OFTEN-NEEDED RADIO DIAGRAMS

ZENITH RADIO CORPORATION

MODEL J615 CHASSIS 6J05

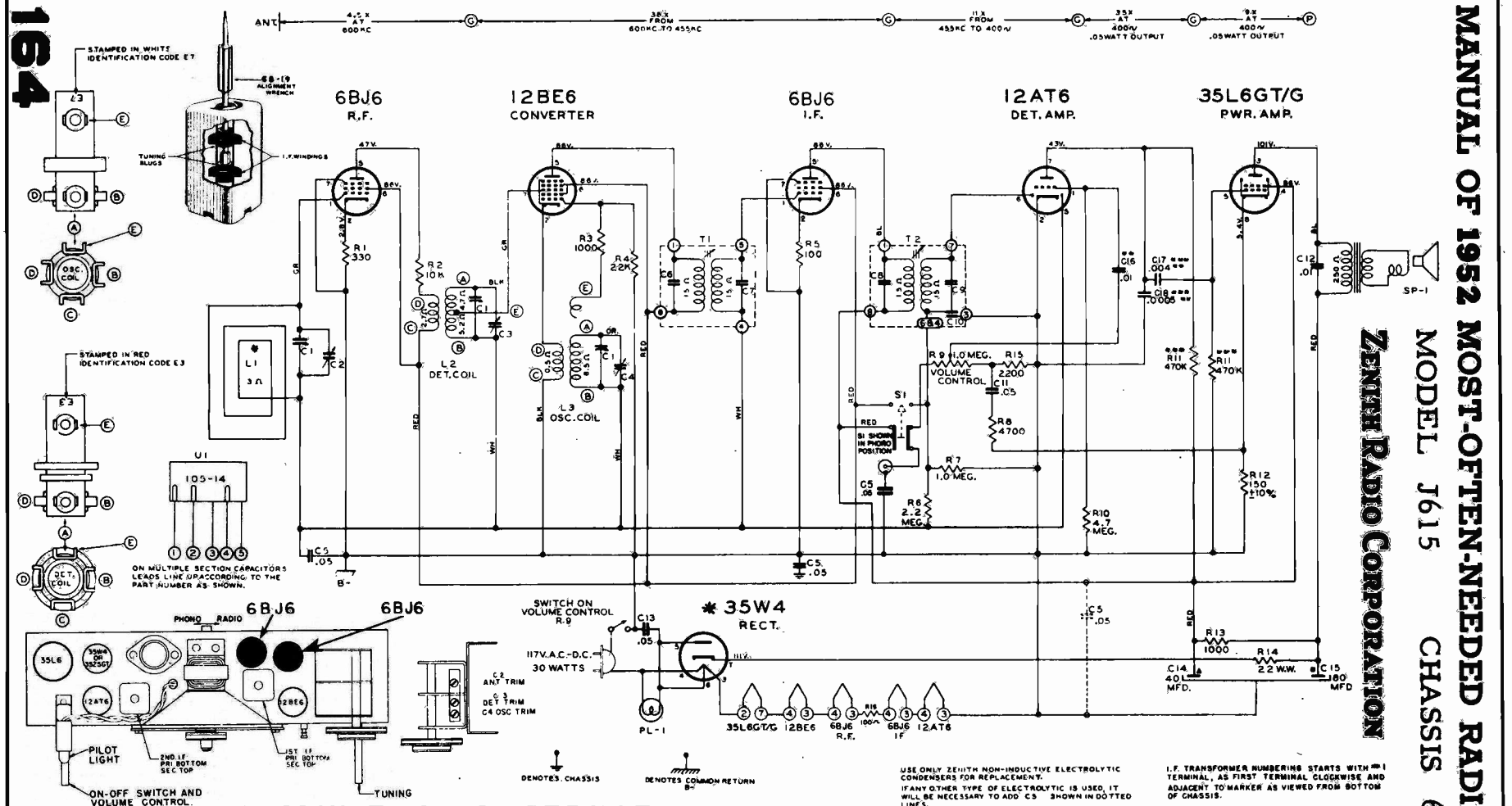

USE ONLY ZENITH NON-INDUCTIVE ELECTROLYTIC CONDENSERS FOR REPLACEMENT.

IF ANY OTHER TYPE OF ELECTROLYTIC IS USED, IT WILL BE NECESSARY TO ADD C5 SHOWN IN DOTTED LINES.

I.F. TRANSFORMER NUMBERING STARTS WITH #1 TERMINAL, AS FIRST TERMINAL CLOCKWISE AND ADJACENT TO MARKER AS VIEWED FROM BOTTOM OF CHASSIS.

I.F. FREQUENCY 455KC.

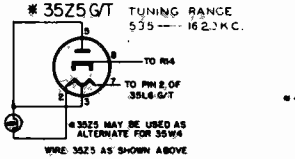

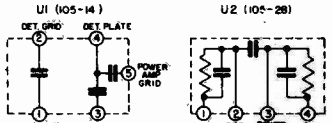

* WHEN USING U1 OMIT
C16 — .01 MFD
C17 — .004 MFD
C18 — .0005 MFD

** WHEN USING U2 OMIT
C17 — .004 MFD
C18 — .0005 MFD.
R11 — 470K
R11 — 470K

ALL VOLTAGES MEASURED FROM COMMON RETURN TO POINTS INDICATED WITH AN A.C., D.C. OR VACUUM TUBE VOLTMETER.

ALL VOLTAGES ARE D.C. UNLESS OTHERWISE SPECIFIED

ALL RESISTORS ±20% TOLERANCE UNLESS OTHERWISE SPECIFIED

ALIGNMENT PROCEDURE

OPERATION	CONNECT OSCILLATOR TO	DUMMY ANTENNA	INPUT SIG. FREQUENCY	SET DIAL AT	TRIMMERS	PURPOSE
1	Convertor Grid	.5 Mfd.	455 Kc.	600 Kc.	Adjust Primary & Secondary Slugs	For I.F. Alignment
2	Single Turn Loosely Coupled to Wave Magnet	--	1600 Kc.	1600 Kc.	C-4	Set Oscillator to Dial Scale.
3		--	1400 Kc.	1400 Kc.	C-3	Detector Alignment
4		--	1400 Kc.	1400 Kc.	C-2	Antenna Alignment

MODEL J616—CHASSIS 6J03

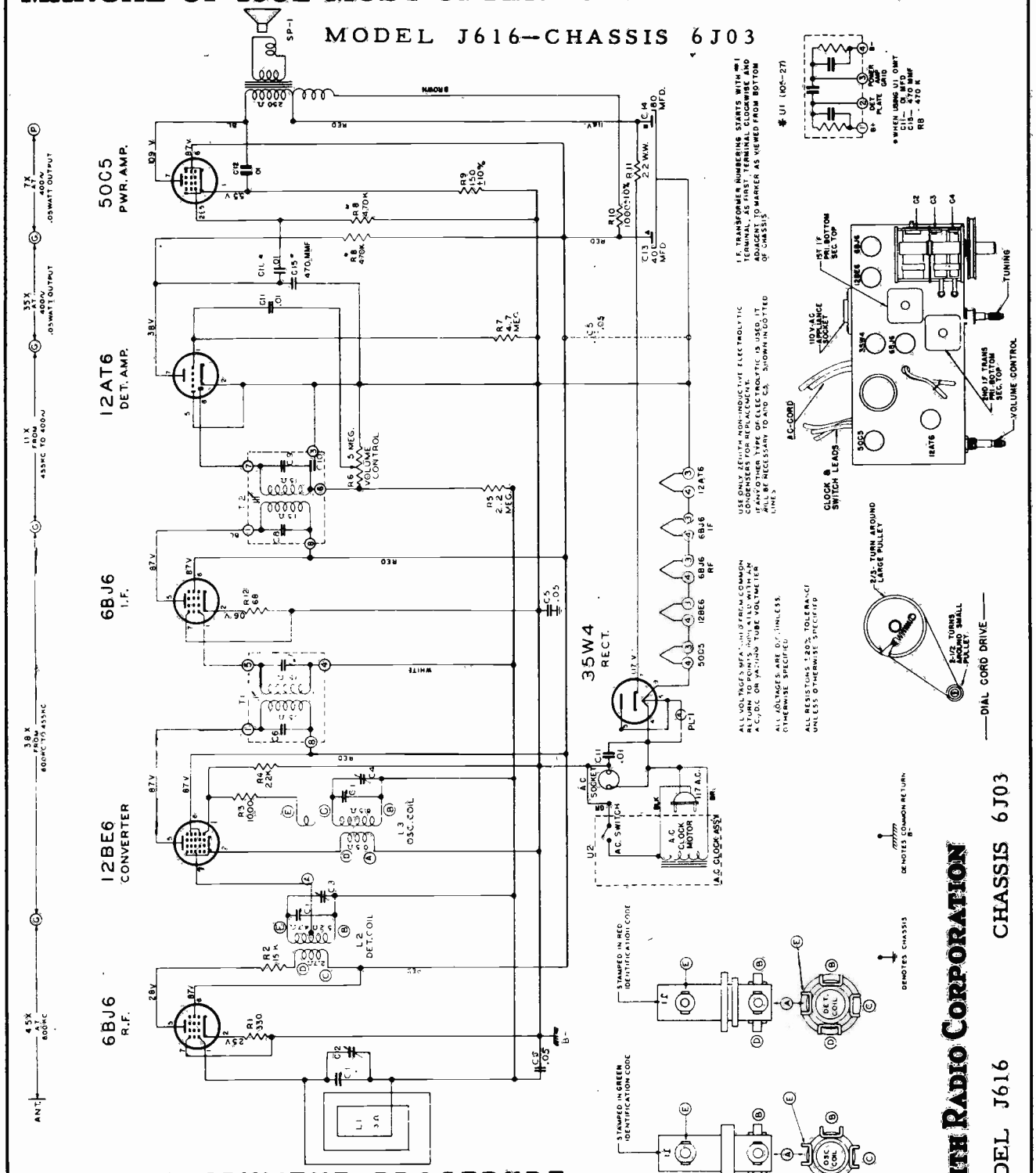

ALIGNMENT PROCEDURE

OPERATION	CONNECT OSCILLATOR TO	DUMMY ANTENNA	INPUT SIG. FREQUENCY	SET DIAL AT	TRIMMERS	PURPOSE
1	Convertor Grid	.5 Mfd.	455 Kc.	600 Kc.	Adjust Primary & Secondary Slugs	For I.F. Alignment
2	Single Turn Loosely Coupled to Wave Magnet	--	1600 Kc.	1600 Kc.	C-4	Set Oscillator to Dial Scale.
3		--	1400 Kc.	1400 Kc.	C-3	Detector Alignment
4		--	1400 Kc.	1400 Kc.	C-2	Antenna

ZENITH RADIO CORPORATION

MODEL J616 CHASSIS 6J03

Zenith Radio Corp. *** Models J664, J665E, and J665R, Chassis 6J02.

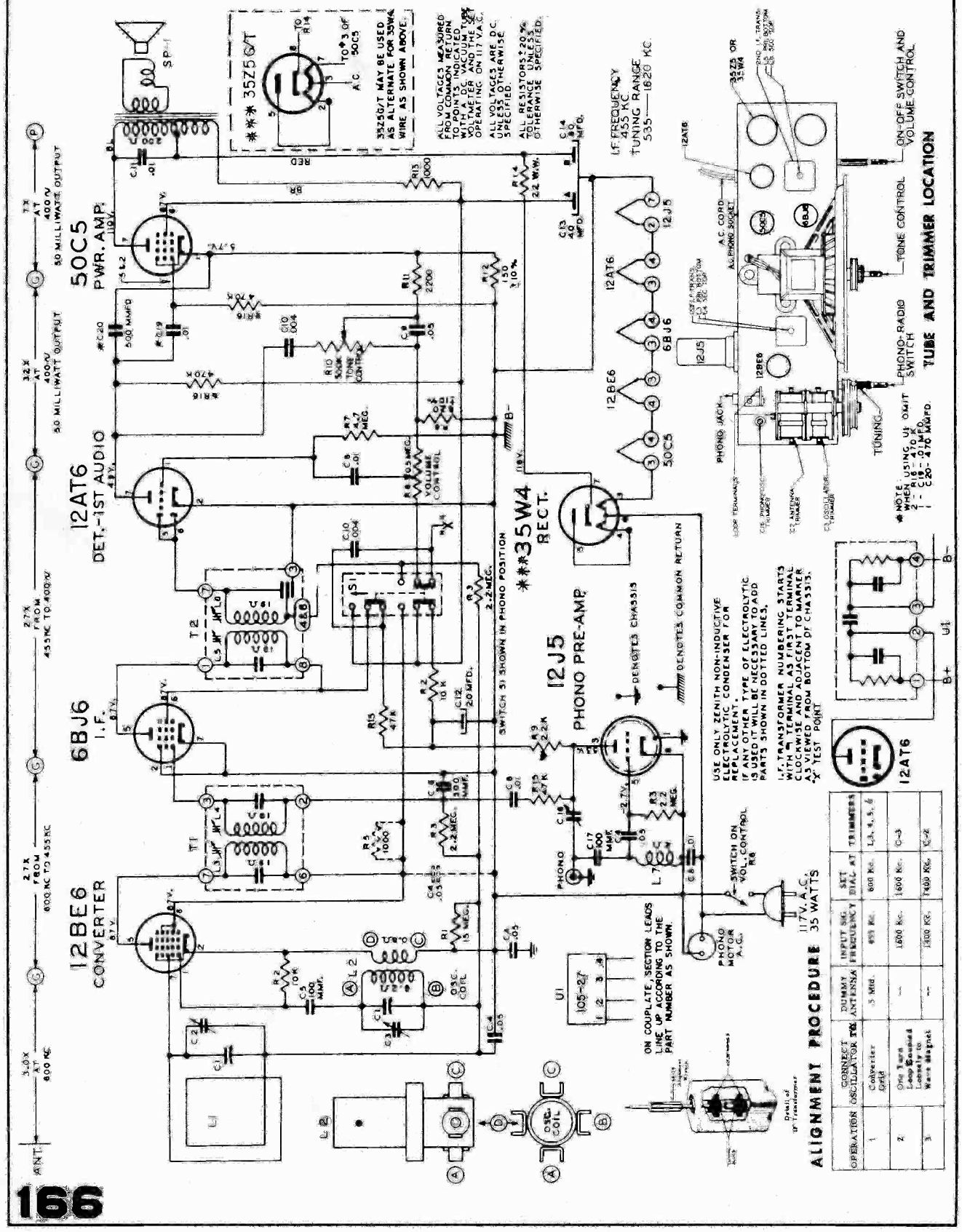

MODELS K510, K510W & K510Y, CHASSIS 5K02

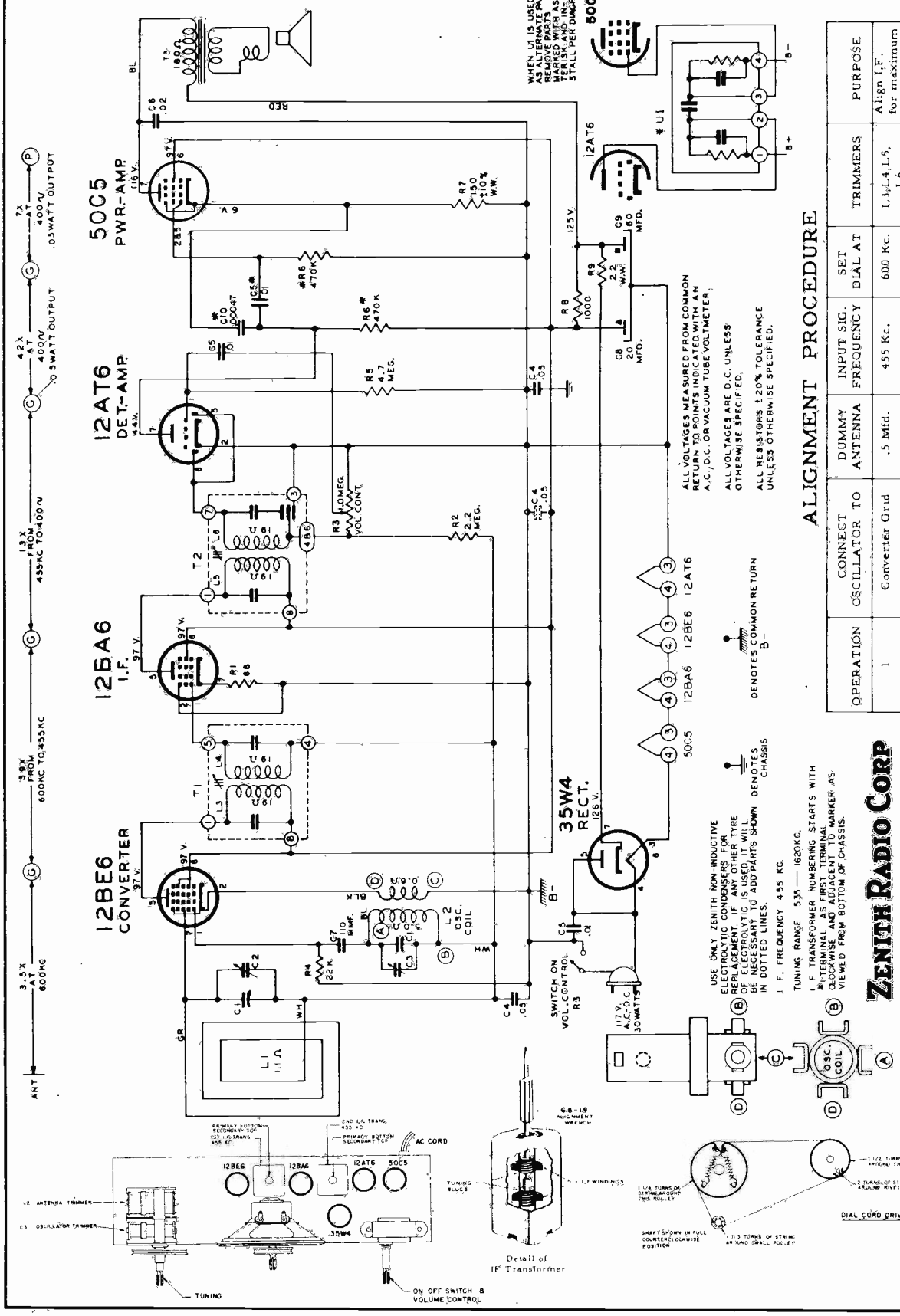

ALIGNMENT PROCEDURE

OPERATION	CONNECT OSCILLATOR TO	DUMMY ANTENNA	INPUT SIG. FREQUENCY	SET DIAL AT	TRIMMERS	PURPOSE
1	Converter Grid	.5 Mfd.	455 Kc.	600 Kc.	L3,L4,L5, L6	Align I.F. for maximum output
2	One Turn Loop Coupled Loosely to Wave Magnet	---	1600 Kc.	1600 Kc.	C3	Set Oscillator to Dial Scale.
3	---	---	1400 Kc.	1400 Kc.	C2	Align Antenna Stage

ZENITH RADIO CORP

CHASSIS 5K02

MODELS K510, K510W & K510Y

MANUAL OF 1952 MOST-OFTEN-NEEDED RADIO DIAGRAMS

CHASSIS 7J20 USED ON MODEL J2766

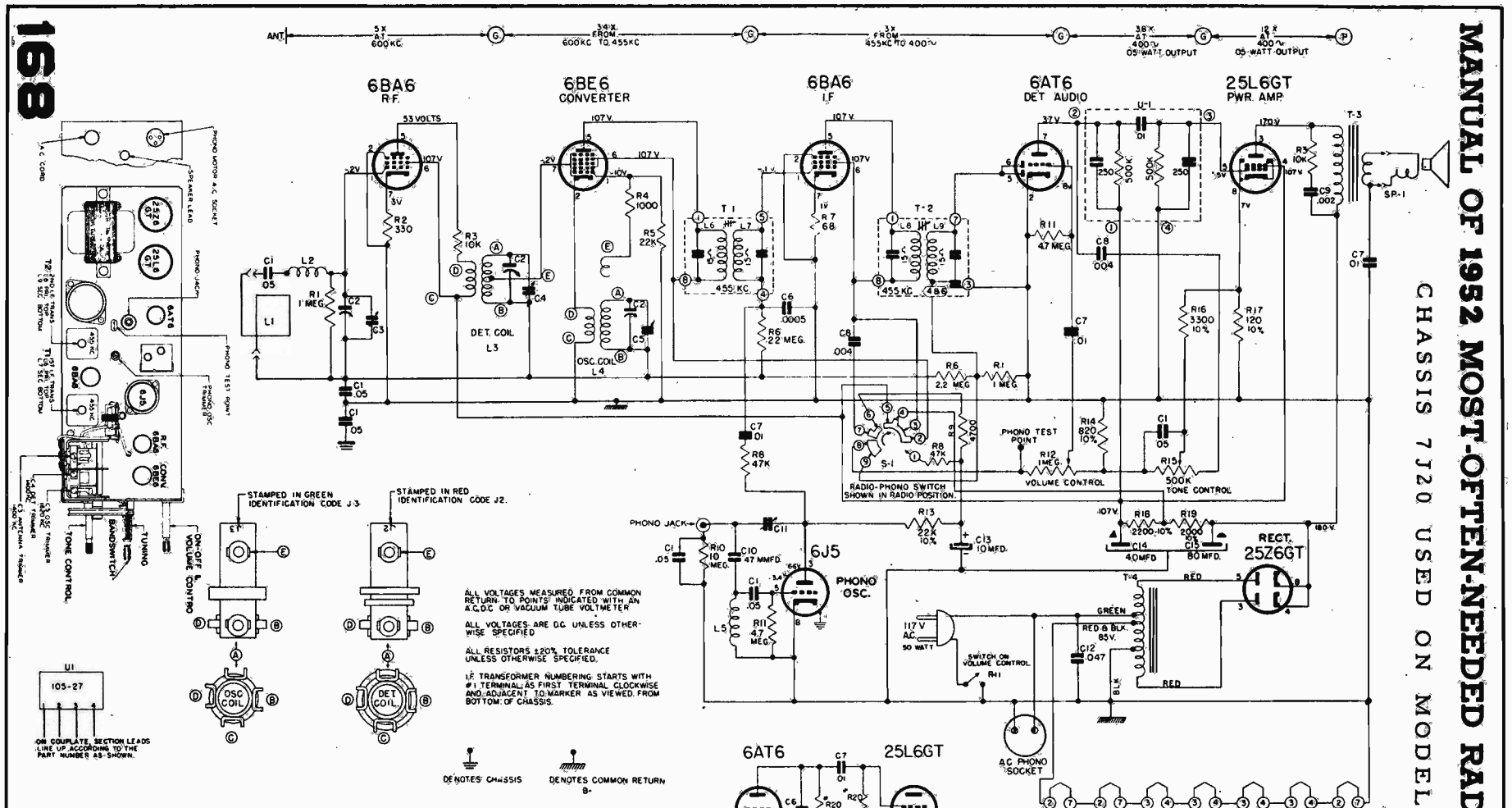

ALIGNMENT PROCEDURE

OPERATION	CONNECT OSCILLATOR TO	DUMMY ANTENNA	INPUT SIG. FREQUENCY	SET DIAL AT	TRIMMERS	PURPOSE
1	Convertor Grid	.5 Mfd.	455 Kc.	600 Kc.	L6, 7, 8 & 9	For I.F. Alignment
2	Single Turn Loosely Coupled to Wave Magnet	--	1620 Kc.	1620 Kc.	C-5	Set Oscillator to Dial Scale.
3		--	1400 Kc.	1400 Kc.	C-4	Detector Alignment
4		--	1400 Kc.	1400 Kc.	C-3	Antenna Alignment

ZENITH RADIO CORPORATION

CHASSIS 7J20 USED ON MODEL J2766

Another

Supreme Publications

Service Manual

Supreme Publications are Available at All Leading Radio Jobbers