Most - Often - Needed

1953

VOLUME TV-7

Television

Servicing Information

THEORY
PRACTICE EXPERIENCE

Compiled by
M. N. BEITMAN

SUPREME PUBLICATIONS

VOLUME TV-7
PRICE $3

Most - Often - Needed

1953

Volume TV-7

Television

Servicing Information

Compiled by

M. N. BEITMAN

Supreme Publications

3727 West 13th Street *** Chicago 23, Illinois

Foreword

This new "1953 Television Servicing Information" manual is the seventh volume of the Supreme Publications TV series. As in previous volumes, we have tried to include in this new manual circuit diagrams and all essential service facts on every popular TV set made during the past year. Factory prepared and checked material was used in every case where it was available. We believe that each manufacturer knows its sets best and can prepare the most accurate and easiest to apply service material on the very sets they engineered, built, and distributed. The kind reception given by servicemen to previous volumes of this series encourages us to believe that our selection and editing of factory material incorporated in these manuals meets with your needs and approval.

The data on 1953 TV models included in this new SUPREME manual brings exciting news of recent technical developments that will prove of great interest to you and will be the help you need when these sets are in your shop for service.

The list of Contents is given on pages 3 and 4, while a complete Index by manufacturers and model (or chassis) numbers begins on page 191. Refer to this list and index to find the TV material you need.

Our sincere thanks and appreciation is extended to all manufacturers through whose cooperation it was possible to present technical information on the sets of their make.

M. N. Beitman

April 1953
Chicago, Illinois

Contents

Table of Contents, continued

Admiral

Chassis 19B1, 19C1, 19[illegible]1, 19F1, 19F1A, 19G1, 19H1, 19K1, and 19N1

Used in Models 17DX10, 17DX[illegible]1, 17DX12, 121DX10, -A, 121DX11, 121DX12, -A, 121DX16, -A, -L, 121DX17, -A, [illegible]L, 221DX15, -A, -L, 221DX16, -A, -L, 221DX17, 221DX17A, -L, 221DX26, -A, -[illegible], 221DX38, -A, 222DX15, 321DX15, -A, -L, 321DX16, -A, -L, 321DX17, -A, [illegible]-L, 321DX25A, -B, 321DX26, -A, -B, 321DX27A, -B.

Service notes presented below, alignment information on pages 6 to 9, and circuit diagrams on pag[illegible]s 10 and 11, apply to the above listed TV sets. All 19 series chassis emplo[illegible] the same basic television circuitry. The 19B1, 19C1, 19F1, 19F1A, 19H1, [illegible]nd 19K1 chassis are television only models. The 19E1, 19G1, and 19N1 [illegible]hassis are used in combination models. These chassis use various size pic[illegible]ure tubes and some have tone controls. Two types of tuners have been us[illegible]d and both are shown on page 10.

INDIVIDUAL CHANNEL SLUG ADJUST[illegible]MENT USING A TELEVISION SIGNAL

Individual channel oscillator adjustm[illegible]ent of every receiver should be checked upon [illegible]nstallation or servicing. If this adjustment is [illegible]roperly made, it is possible to tune from one st[illegible]tion to another by merely turning the CHANNEL [illegible]ontrol. With correct oscillator channel adjustment, be[illegible] picture will be located at the approximate center of the [illegible]range of the TUNING control. However, this may not n[illegible]essarily be maximum sound output.

Channel slug adjustment can be made withou[illegible] removing the chassis from the cabinet. Adjust as fo[illegible]ows:

a. Turn the set on and allow 15 minutes to [illegible]arm up.

b. Set the CHANNEL knob for a station in [illegible]eration. Set all other controls for a normal picture.

c. Set TUNING control at center of its range [illegible]y rotating it approximately half-way.

d. Remove the CHANNEL and TUNING knob[illegible].

e. Insert a 1/8" blade, NON-METALLIC screwd[illegible]ver (kit consisting of one metallic and one non-metall[illegible]c screwdriver is available under part number 98A[illegible]0-3) in the 1/4" hole adjacent to the channel tuni[illegible]g shaft. For each channel in operation, carefully a[illegible]just the channel slug for best picture with clear d[illegible]ail. Be sure that the Tuning control is set at the cen[illegible]er of its range before adjusting each channel slug. O[illegible]ly slight rotation of the slug will be required; turning the slug in too far will cause it to fall into the coil. (If the slug falls into the coil, remove the coil, [illegible]ove the retaining spring aside, lightly tap the ope[illegible]end of the coil until the slug slips out. Replace [illegible]lug and reset retaining spring.)

TOUCH-UP OF RATIO DETECTOR SECONDARY USING TELEVISION SIGNAL

*This adjustment is accessible through the 1/4" hole (just below T201) in bottom of the cabinet or the chassis mounting shelf, located toward the left side facing the rear of the set. Removal of the chassis is therefore not required. ***Adjustment need be made on one channel only.*** Proceed as follows:

a. Turn set on and allow about 15 minutes for warm up.

b. Tune set for normal picture and sound.

c. Carefully insert a non-metallic alignment tool through the opening in cabinet bottom below T201. An alignment tool with a screwdriver blade or hexagonal end is required depending on the transformer used, see * note below. When the alignment tool engages the bottom tuning slug A8, adjust the slug for best sound with minimum buzz level. Do this carefully as only slight rotation in either direction will generally be required. Correct adjustment point is located between the two maximum buzz peaks that will be noticed when turning the slug back and forth about 1/4 to 1/2 turn.

d. If necessary, repeat individual channel slug adjustment and conclude with retouching the ratio detector secondary. Note: If oscillator adjustment is required for other channels, it will ***not*** be necessary to repeat the ratio detector secondary adjustment.

ALIGNMENT OF 4.5 MC TRAP A12, USING A TELEVISION SIGNAL

Beat interference (4.5 MC) appears in picture as very fine vertical or diagonal lines, very close together, having a "gauze-like" appearance, the pattern will vary with speech, forming a very fine herringbone pattern.

The trap can be tuned by watching the picture and adjusting the slug for minimum 4.5 MC interference.

* If ratio detector transformer (T201) has hollow hexag[illegible]nal core slugs, bottom slug adjustment A8 can be made from top of chassis, if you use alignment tool (part number 98A30-7; availal[illegible]e at Admiral Distributor). Bottom slug (A8) can be reached through the hole in the core of the upper slug (A10).

Admiral Chassis 19B1, 19C1, 19E1, 19F1, 19F1A, 19G1, 19H1, 19K1, and 19N1

TELEVISION ALIGNMENT PROCEDURE

GENERAL

Complete alignment consists of the following individual procedures and should be performed in this sequence.

a. IF Amplifier and Trap Alignment.
b. IF Response Curve Check.
c. 4.5 MC Sound IF and Trap Alignment.
d. RF and Mixer Alignment.
e. Over-all RF and IF Response Curve Check.
f. HF Oscillator Adjustment.

ALIGNMENT TOOLS

An alignment tool kit consisting of one metallic and one non-metallic screwdriver is available under part number 98A-30-3. A non-metallic alignment tool with a screwdriver point at one end and hexagonal wrench (for hollow hexagon core slugs) at the other is available under part number 98A-30-7.

IF AMPLIFIER AND TRAP ALIGNMENT

Connect bias battery; negative to test point "T", see figure 9, positive to chassis. A 3 volt battery is required for steps 1, 2, 3, 4 and 5.

Disconnect antenna. Connect a jumper wire across the antenna terminals.

Set Channel selector to channel 12 or other unassigned high channel, to prevent interference during alignment.

Set the Picture control fully to the left (counterclockwise).

Allow about 15 minutes for receiver and test equipment to warm up.

Use lowest DC scale on VTVM.

Step	Signal Gen. Freq.	VTVM and Signal Generator Connections	Instructions	Adjust
1	*27.25 MC	VTVM high side to test point "V", common to chassis. Generator high side to 6J6 (V102) tube shield; insulate shield from chassis. Connect low side to chassis near 6J6 tube base.	Use 3 volt bias battery. Use lowest DC scale on VTVM. When peaking, keep reducing generator output for VTVM reading of approx. 1 volt or less. Set channel switch to channel 12 or other unassigned high channel.	A1 for minimum.
2	25.3 MC			A2 and A3 for maximum.
3	23.1 MC			A4 and A5 for maximum.
4	*27.25 MC			Repeat step 1 above.
5	To insure correct IF alignment, make the "IF Response Curve Check" given on opposite page.			

* Before proceeding, be sure to check the signal generator used in alignment against a crystal calibrator or other frequency standard for absolute frequency calibration required for this operation.

ALIGNMENT HINT

After becoming familiar with alignment procedure, some servicemen simplify subsequent alignment of sets by merely using the essential alignment data given in figures below.

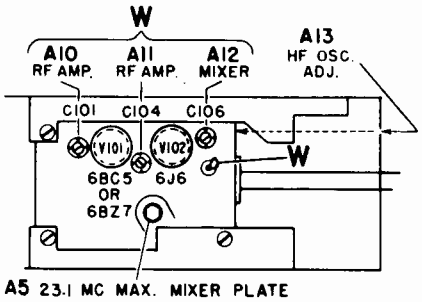

Figure 8. Top View of TV Tuner Showing Adjustment Locations.

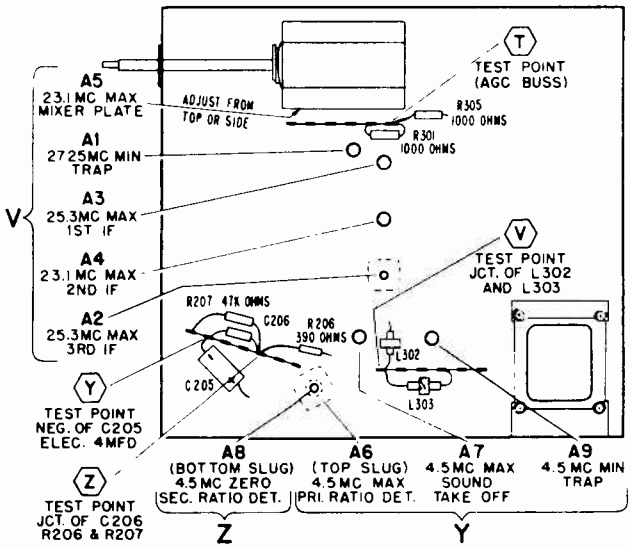

Figure 9. Bottom View of Chassis Showing Test Point Connections and IF Alignment Data.

Admiral 19B1, 19C1, 19E1, 19F1, 19F1A, 19G1, 19H1, 19K1, 19N1 Chassis

IF RE[illegible]PONSE CURVE CHECK

(Using [illegible]weep generator and oscilloscope)

Receiver Controls and Bias Battery	Sweep Generator	Marker Generator	Oscilloscope	Instructions
Set Channel selector on channel 12 or an unassigned high channel. Picture control fully to the left. Connect negative of 3 volt bias battery to test point "T"; positive to chassis.	Connect high side to 6J6 mixer-osc. tube shield. Insulate tube shield from chassis, low side to chassis ground. Set sweep frequency to 23MC, and sweep width approximately 7MC.	[illegible]f an external [illegible]narker generator is [illegible]sed, loosely couple [illegible]igh side to sweep [illegible]enerator lead on [illegible]ube shield, low [illegible]ide to chassis. [illegible]Marker frequencies [illegible]ndicated on IF Re[illegible]ponse Curve.	Connect to test point "V". See figure 9. Marker pips on scope will be more distinct if a condenser from 100 mmfd. to 1000 mmfd. is connected across the oscilloscope input.	Check curve obtained against ideal response curve in fig. 6. Note tolerances on curve. Keep marker and sweep outputs at very minimum to prevent overloading. A reduction in sweep output should reduce response curve amplitude without altering the shape of the response curve. If the curve is not within tolerance or the markers are not in the proper location on the curve, touch-up with IF slugs as instructed below.

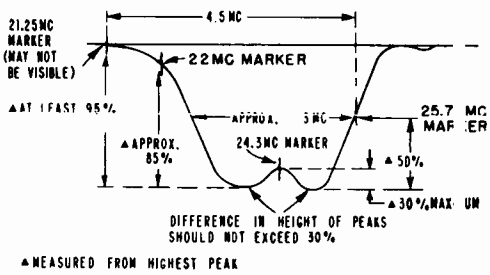

Figure 6. Ideal IF Response Curve.

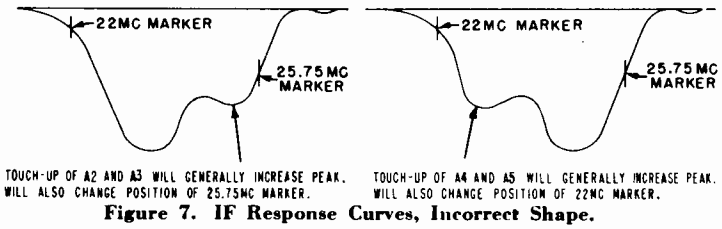

Figure 7. IF Response Curves, Incorrect Shape.

If it is necessary to adjust for approximate equal peaks and marker location, carefully adjust alignment slugs as instructed under the above figures. It should not be necessary to turn the slugs more than one turn in either direction.

If the curve cannot be made to resemble the response curve shown at left, repeat all steps under "IF Amplifier and Trap Alignment" making sure that generator frequencies are accurate and adjustments are carefully made. If a satisfactory curve cannot be obtained after repeating these steps, it may be necessary to change IF amplifier tubes or check for a defective circuit component to be sure that each stage is operating properly.

4.5 MC SOU[illegible]D IF AND TRAP ALIGNMENT

a. Connect signal generator high side to P[illegible] 2 of V304 (6AL5) through a .01 mfd. condenser, co[illegible]ect low side to chassis.

b. Allow about 15 minutes for receiver and tes[illegible] equipment to warm up.

c. Set Picture control fully to the left (count[illegible] clockwise).

d. Use a NON-METALLIC alignment tool. If Ratio Det. Transformer (T201) has hollow core slugs, bottom slug adjustment A8 can be made from top of chassis, if you use alignment tool #98A30-7 obtainable from Admiral Distributor.

Step	Signal Gen. Freq. (MC)	VTVM Connecti[illegible]ns	Instructions	Adjust
	When using a signal generator, b[illegible] sure to check it against a crystal calibrator or other frequency standard for accurate frequency calibratio[illegible] at 4.5 MC. Accuracy required is within one kilocycle. IMPORTANT: If a signal genera[illegible]or and frequency standard are not available, alignment can be made using a TV station signal. Tune in a sta[illegible]ion and follow steps 1, 2 and 3 below. If necessary use a higher scale on the VTVM.			
1	Set to exactly 4.5 MC	High side to test point "Y"; common to chass[illegible].	Use lowest DC scale on VTVM.	A6 and A7 for maximum (keep reducing generator output to keep VTVM at approx. 1 volt).
2		High side to test point "Z"; common to chass[illegible].	Use zero center scale on VTVM, if available.	A8 for zero on VTVM (the correct zero point is located between a positive and a negative maximum). If A6 was far off, repeat step 1.
3		High side to test point "Y"; common to chass[illegible].	Connect a 10 mmfd. condenser from pin 5 of V305 (6CB6) to pin 7 of V201 (6AU6). Use lowest DC scale on VTVM.	A9 for minimum.

Admiral (continued)

RF AND MIXER ALIGNMENT

a. Connect negative of 3 volt bias battery to test point "T", positive to chassis. If it is difficult to obtain a curve of sufficient amplitude, remove battery and connect a wire jumper from test point "T" to chassis.

b. Connect sweep generator to antenna terminals. If sweep generator does not have a built-in marker generator, loosely couple a marker generator to the antenna terminals. To avoid distortion of the response curve, keep sweep generator output at a minimum, marker pips just barely visible.

c. Connect oscilloscope through a 10,000 ohm resistor to test point "W" on tuner (Fig. 11). Keep scope leads away from chassis.

d. Set channel selector to Channel 10.

e. Allow about 15 minutes for receiver to warm up and test equipment.

FOR SETS USING TV TUNER 94D52-1 and -2

(This tuner uses a 6BC5 tube for RF amplifier V101.)

Step	Marker Gen. Freq. (MC)	Sweep Gen. Frequency	Instructions
1	193.25 MC (Video Carrier) 197.75 MC (Sound Carrier)	Sweeping Channel 10. See frequency table below.	Check for curve shown below. If necessary, adjust A10, A11 and A12 (figure 11) as required. Adjusting A11 will generally shift the center of the response curve in relation to the video and sound carrier markers. A10 and A12 should be alternately adjusted for best gain with flat top appearance. Consistent with proper band width and correct marker location, response curve should have maximum amplitude and flat top appearance.
2	Set the sweep generator to sweep the channel to be checked. Set the marker generator for the corresponding video carrier frequency and sound carrier frequency.		Check each channel operating in the service area for curve shown below. In general, the adjustment performed in step 1 is sufficient to give satisfactory response curves on all channels. However, if reasonable alignment is not obtained on a particular channel, (a) check to see that coils have not been intermixed, or (b) try replacing the pair of coils for that particular channel, or (c) repeat step 1 for the weak channel as a compromise adjustment to favor this particular channel. If a compromise adjustment is made, other channels operating in the service area should be checked to make certain that they have not been appreciably affected.

FOR SETS USING TV TUNER 94D46-2 and -3

(This tuner uses a 6BZ7 tube for RF amplifier V101.)

Step	Marker Gen. Freq. (MC)	Sweep Gen. Frequency	Instructions
1	193.25 MC (Video Carrier) 197.75 MC (Sound Carrier)	Sweeping Channel 10. See frequency table below.	Check for curve below. If necessary, alternately adjust A11 and A12 (figure 11) as required to obtain equal peak amplitudes and symmetry, consistent with flat top appearance, proper band width and correct marker location.
2	83.25 MC (Video Carrier) 87.75 MC (Sound Carrier)	Sweeping Channel 6. See frequency table below.	Check for curve below. If necessary, adjust A10 as required to obtain curve having maximum amplitude and flat top appearance consistent with proper band width and correct marker location. After completing adjustment, recheck adjustment of step 1.
3	Set the sweep generator to sweep the channel to be checked. Set the marker generator for the corresponding video carrier frequency and sound carrier frequency.		Check each channel operating in the service area for curve shown below. In general, the adjustment performed in steps 1 and 2 are sufficient to give satisfactory response curves on all channels. However, if reasonable alignment is not obtained on a particular channel, (a) check to see that coils have not been intermixed, or (b) try replacing the pair of coils for that particular channel, or (c) repeat step 1 for a weak high channel as a compromise adjustment to favor the particular channel. Repeat step 2 for the weak low channel to favor the particular low channel. If a compromise adjustment is made, other channels operating in the service area should be checked to make certain that they have not been appreciably affected.

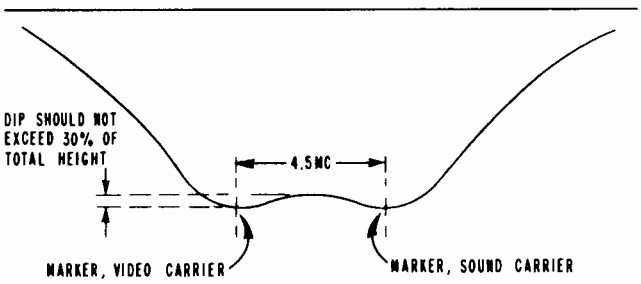

Full skirt of curve will not be visible unless generator sweep width extends beyond 10 MC.
Figure 10. RF Response Curve.

FREQUENCY TABLE

Channel Number	Channel Freq., MC	Video Carrier, MC	Sound Carrier, MC	HF Osc., MC
2	54- 60	55.25	59.75	81
3	60- 66	61.25	65.75	87
4	66- 72	67.25	71.75	93
5	76- 82	77.25	81.75	103
6	82- 88	83.25	87.75	109
7	174-180	175.25	179.75	201
8	180-186	181.25	185.75	207
9	186-192	187.25	191.75	213
10	192-198	193.25	197.75	219
11	198-204	199.25	203.75	225
12	204-210	205.25	209.75	231
13	210-216	211.25	215.75	237

Admiral Series 19, continued

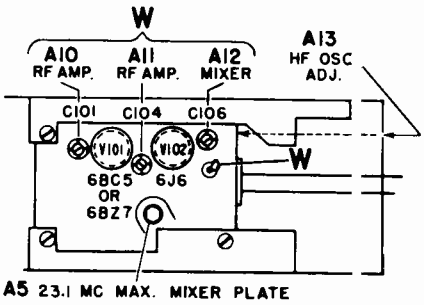

Figure 11. Top of TV Tuner, Sho ving Adjustment Location.

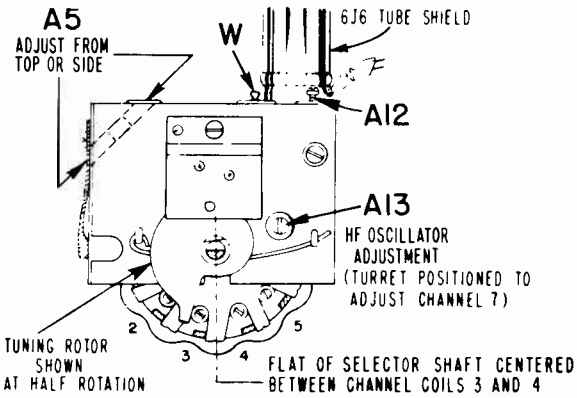

Figure 12. Front View of TV Tuner.

OVER-ALL RF A ND IF RESPONSE CURVE CHECK

(Using : weep generator and oscilloscope)

Receiver Controls and Bias Battery	Sweep Generator	Marker Generator	Oscilloscope	Instructions
Picture control fully to the left. Channel selector on channel 10 or other unassigned high channel. Connect negative of 3 volt bias battery to test point "T", positive to chassis.	Connect to antenna terminals. Set generator to sweep channel selected. Keep generator output as low as possible, to prevent overloading. See frequency table on page 8.	f an external mark- r generator is ised, loosely couple igh side to sweep enerator lead. Iarker frequencies re shown in fre- uency table on age 8.	Connect to point "V". See figure 9.	Compare the response curve obtained against the ideal curve shown in figure 13. If the curve is not within tolerance, touch up the IF slug as instructed below. It should never be necessary to turn slugs more than one turn in either direction. If the curve is satisfactory on the channel checked, all other channels should also be satisfactory. IMPORTANT: When sweep output is reduced, response curve amplitude on scope should also decrease, but curve shape should remain the same. If curve shape changes, reduce sweep output and/or the scope gain until the shape does not change.

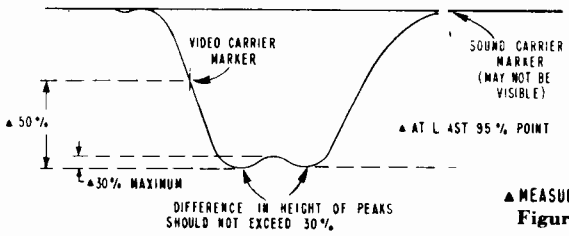

▲MEASURED FROM HIGHEST PEAK

Figure 13. Ideal Over-all RF and IF Response Curve.

Note that video carrier (marker) on the "Over-all RF-IF Response Curve" will appear on the opposite side of the curve as compared to the "IF Response Curve" figure 6. This is due to action of the mixer tube.

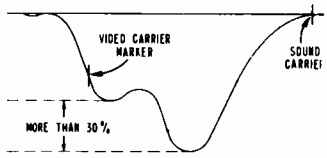

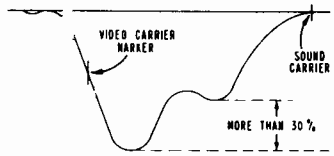

Figure 14. Over-all RF and IF Response Cur es, Incorrect Shape.

HF OSCILLATOR ADJUSTMENT

(I sing a signal generator)

Receiver Control Settings	Signal Generator	Instructions
Set channel selector for each channel to be adjusted. Set "Tuning" control at half rotation. Turn volume control fully to the right (clockwise).	Conne to antenna terminals. Set genera or to exact frequency of HF os llator. See frequency table on pa e 8. *Set generator for maxim m output.*	Connect a wire jumper from test point "W" on the tuner to test point "Z". See figure 9. Remove the ratio detector tube V202 (6AL5). Carefully adjust the oscillator slug A13 on each channel until a whistle (beat) is heard in the speaker of the receiver.

Admiral Corp. Schematic for 19B1, 19C1, 19F1, 19F1A, 19H1 and 19K1 Television Chassis

This schematic is exact for later production of the above listed chassis. Chassis 19E1, 19G1, and 19N1, incorporate a radio tuner and switching network since they are used in combinations, but the television section is identical to this circuit.

SCHEMATIC NOTES

Run numbers are rubber stamped at the rear of the chassis.

Numerical symbols ①, ②, ③, etc. on schematic indicate a production change covered by a run number.

(A1), (A2),.....(Y), (Z), etc. indicate alignment points and alignment connections.

WAVEFORM DATA

(Waveforms given on schematic)

Waveforms taken with PICTURE control set fully to the right, all other controls set for normal picture (in sync). WARNING: Incorrect adjustment of the DX Range Finder control will cause waveform distortion.

Waveforms at video and sync stages obtained with transmitted signal input to receiver.

The oscilloscope sweep is adjusted for 30 cycles (which is one-half of the vertical frequency), or for 7875 cycles (which is one-half of the horizontal frequency) so that two pulses appear on the screen.

The peak-to-peak voltage readings shown are subject to some variations due to response of the oscilloscope and parts tolerances.

Waveform at pins 1 and 4 of V403 and terminal "C" (2) of T404 taken with a 10 mmfd. condenser connected in series with the oscilloscope high side.

CAUTION

Pulsed high voltage is present at pin 3 of V406. Do not make direct connection to this point. Waveform at pin 3 of V406 taken by clipping or twisting lead from oscilloscope high side over lead connecting to terminal 3 of T403.

⑥ TV TUNER 94D52-1&-2 USED IN 19B1 CHASSIS ONLY

V302, V303, & V304 CIRCUIT SHOWN BELOW USED ONLY WITH 94D52-1&-2 TUNERS (19B1 CHASSIS)

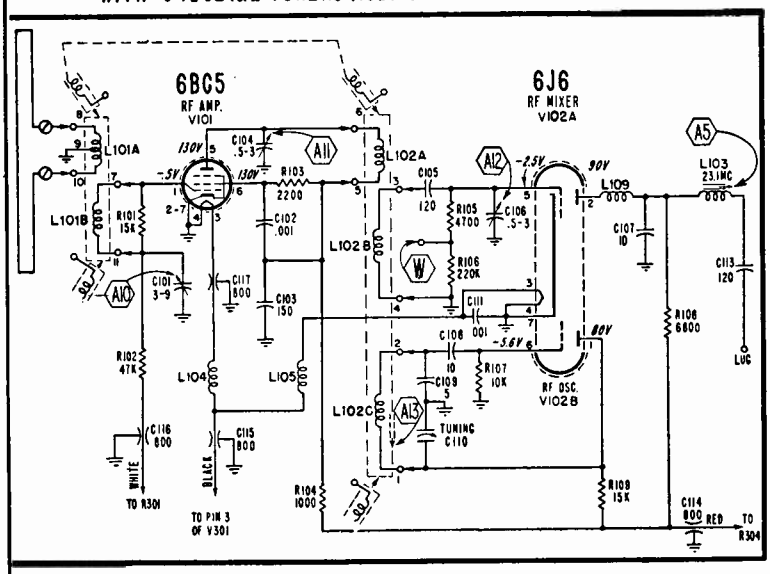

THIS CIRCUIT USED WITH 94D52-1&-2 TUNERS (19B1 CHASSIS)

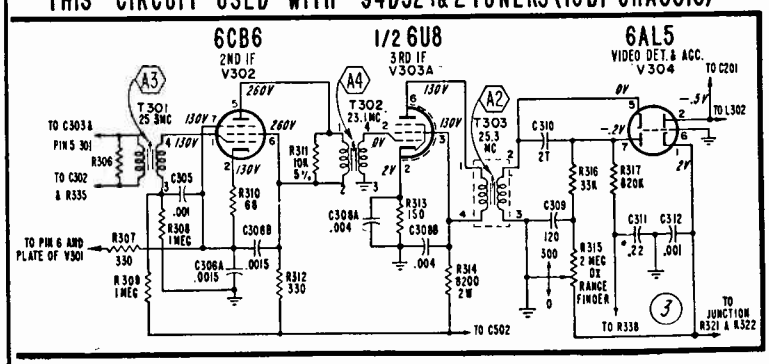

⑥ TV TUNER 94D46-2&-3

USED IN 19C1, 19F1, 19F1A, 19H1, & 19K1 CHASSIS

TURRET SWITCH SETTING SELECTS PAIR OF COILS L101 & L102 FOR CHANNEL DESIRED

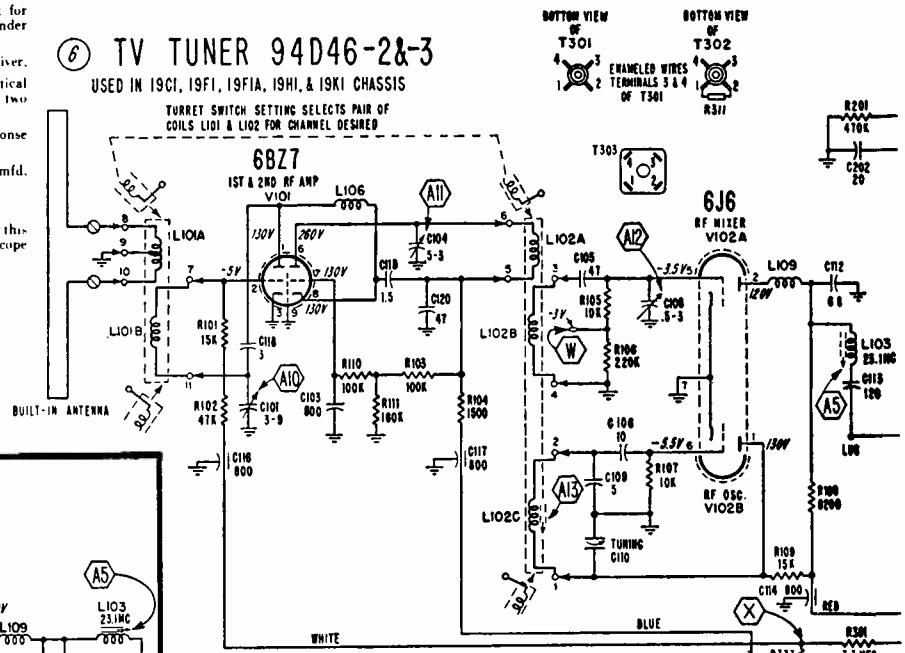

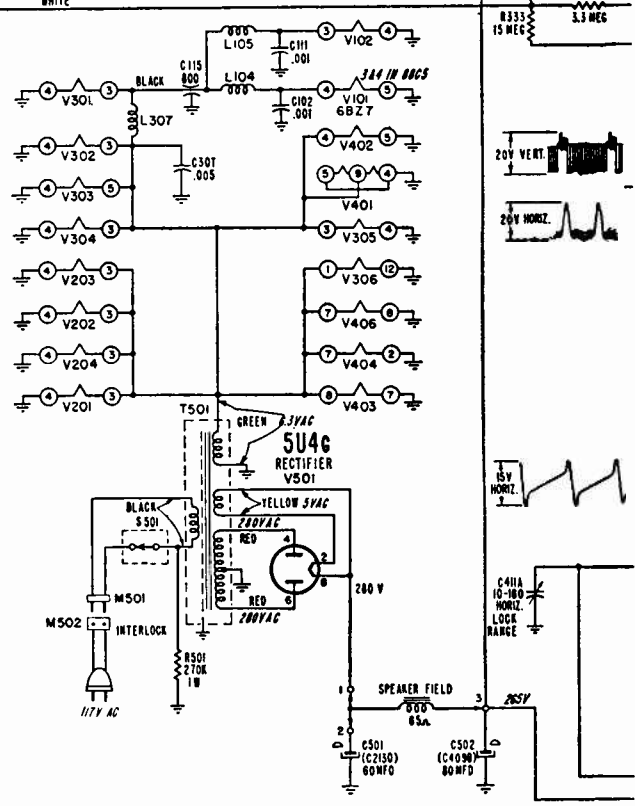

MOST-OFTEN-NEEDED 19[illegible]3 TELEVISION SERVICING INFORMATION

TV VOLTAGE DAT.

- PICTURE control turned fully clockwise. CHANNEL control set on an unusued channel. Other front controls set at approximately half rotat[illegible]n. Vert. Lin. and Height set at approximately half rotation. DX Range Finder con[illegible]ol set fully to the left (at "O" position).
- Antenna disconnected from set with terminals shorted
- Voltages marked with an asterisk * will vary widely [illegible]ith control setting.
- Line voltage 117 volts AC.
- Voltages measured with a vacuum tube voltmeter b[illegible]tween tube socket terminals and chassis, unless otherwise indicated.
  Voltages at V306 measured from top of socket with tu[illegible]e removed.

Note: Tone control used in the 19C1, 19F1, 19H1 and 19K1 chassis.

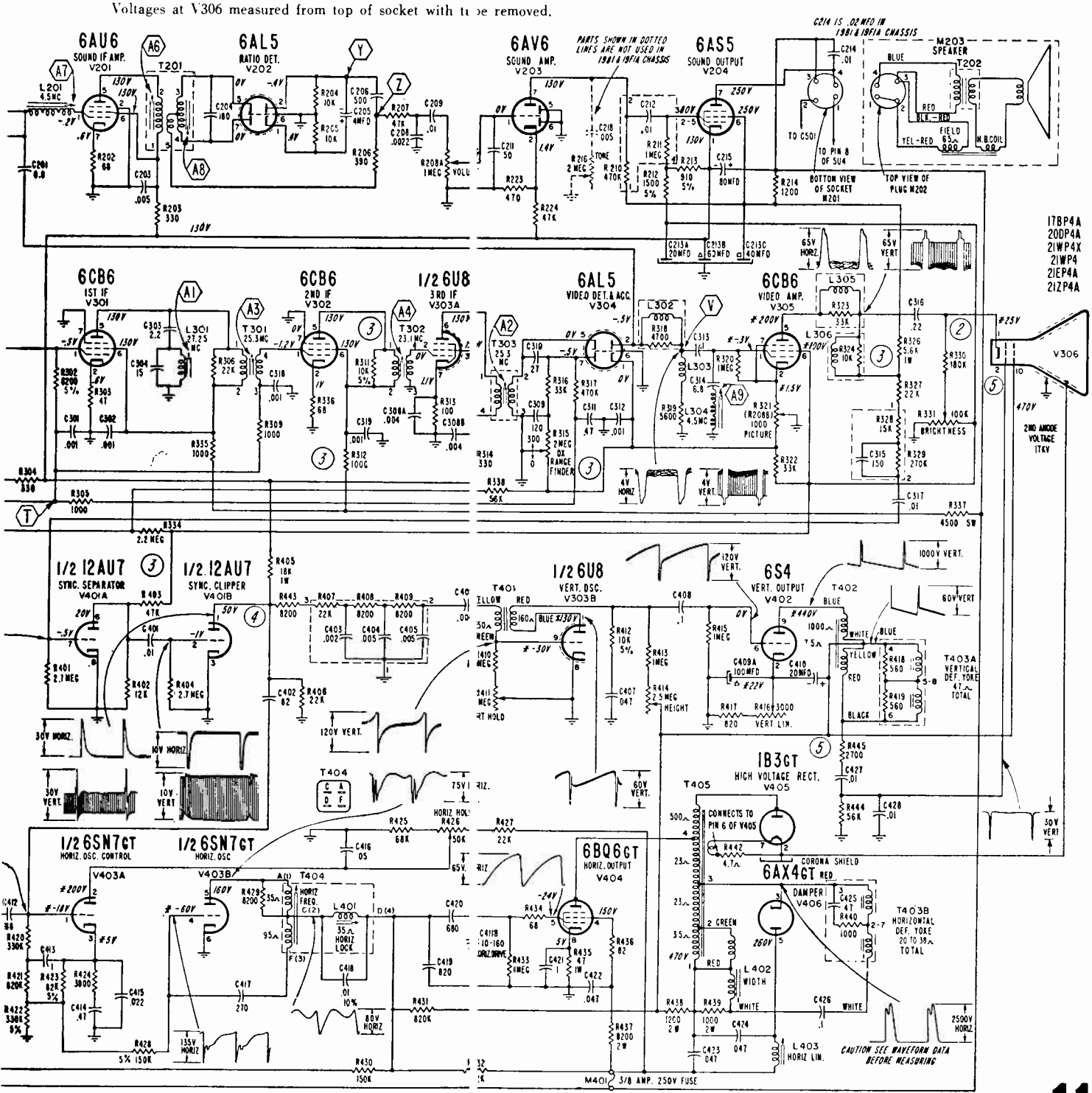

Admiral 22C2 and 22E2 CHASSIS

Used in Models 222DX15S, 222DX16, 222DX17, 222DX26, 222DX27, 222DX48, 222DX49, and 322DX16. The 22C2 chassis is used in straight television sets, while 22E2 chassis combines a radio receiver and is used in combination sets. The service material is applicable to both chassis, while the circuit on pages 16 and 17 is exact for 22E2 chassis. The service material for these chassis begins on this page and is completed on page 18.

22A2, 22A2A, 22M1 and 22Y1 CHASSIS

are similar to the 22C2 and 22E2 Chassis, but use slightly different tuners. These additional Admiral chassis are used in the following models: 121K15A, 121K16A, 121K17A, 121M10, 121M11A, 121M12A, 221K45A, 221K46A, 221K47A, 321M25A, 321M26A, 321M27A, 421M15A, 421M16A, 421M35, 421M36, 421M37, 520M11, 520M12, 520M15, 520M16, 520M17.

TOUCH-UP OF RATIO DETECTOR SECONDARY USING TELEVISION SIGNAL (A12, BOTTOM SLUG OF T201)

*This adjustment is accessible through the ¼" hole (just below T201) in bottom of the cabinet or the chassis mounting shelf, located toward the left side facing the rear of the set. Removal of the chassis is therefore not required. ***Adjustment need be made on one channel only.*** Proceed as follows:

a. Turn set on and allow about 15 minutes for warm up.

b. Tune set for normal picture and sound.

c. Carefully insert a non-metallic alignment tool through the opening in cabinet bottom below T201. An alignment tool with a screwdriver blade or hexagonal end is required depending on the transformer used, see * note below. When the alignment tool engages the bottom tuning slug A12, adjust the slug for best sound with minimum buzz level. Do this carefully as only slight rotation in either direction will generally be required. Correct adjustment point is located between the two maximum buzz peaks that will be noticed when turning the slug back and forth about ¼ to ½ turn.

d. If necessary, repeat individual channel slug adjustment and conclude with retouching the ratio detector secondary. Note: If oscillator adjustment is required for other channels, it will ***not*** be necessary to repeat the ratio detector secondary adjustment after ***once*** correctly adjusting it.

SERVICING RADIO TUBES AND DIAL LIGHT IN 22E2 SETS

The radio tubes can be serviced without removing the TV chassis from the cabinet. The radio tubes can be reached through the opening in the underside of the chassis shelf.

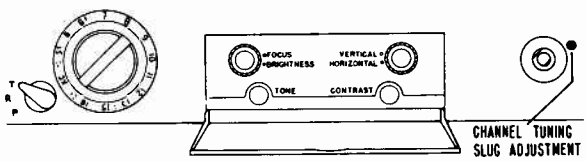

Figure 1. Control Panel in 22E2 Sets. Channel and Tuning Knobs Removed.

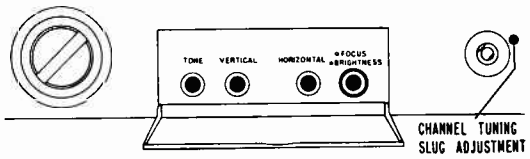

Figure 2. Control Panel in 22C2 Sets. Channel and Tuning Knobs Removed.

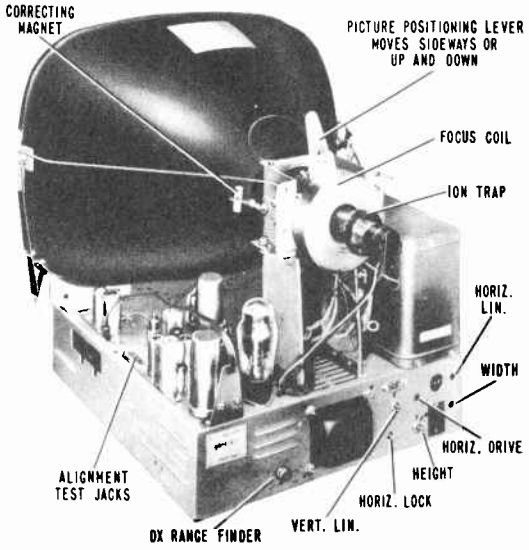

Figure 3. Chassis View Showing Adjustment Locations.

* If ratio detector transformer (T201) has hollow hexagonal core slugs, bottom slug adjustment A12 can be made from top of chassis, if you use alignment tool (part number 98A30-7; available at Admiral Distributor). Bottom slug A12 can be reached through the hole in the core of the upper slug (A11).

Admiral

TELEVISION ALIGNMENT PROCEDURE

22C2 and 22E2

IF AMPLIFIER AND TRAP ALIGNMENT

- Connect bias battery; negative to test point "T", see figure 7, positive to chassis. A 3 volt battery is required for steps 1, 2, 3, 4 and 7. A 1½ volt bias battery is required for steps 5 and 6.
- Disconnect antenna. Connect a jumper wire across the antenna terminals.
- Set Channel selector to channel 12 or other unassigned high channel, to prevent interference during alignment.
- Set the Picture control fully to the left (counterclockwise).
- Allow about 15 minutes for receiver and test equipment to warm up.
- Use lowest DC scale on VTVM.

Step	Signal Gen. Freq.	VTVM and Signal Generator Connections		Instructions	Adjust
1	25.3 MC	VTVM high side to test point "V", common to chassis. Generator high side to 6J6 (V102) tube shield; insulate shield from chassis. Connect low side to chassis near 6J6 tube base.		Use 3 volt bias battery. Use lowest DC scale on VTVM. When peaking, keep reducing generator output for VTVM reading of approx. 1 volt or less. Set channel switch to channel 12 or other unassigned high channel.	A1, A2 and A3 for maximum.
2	22.3 MC				A4 for maximum.
3	23.5 MC				A5 for maximum.
4	21.25 MC				A6 for minimum.
5	*27.25 MC	Connect Generator and VTVM same as in step 1.		Use 1½ volt bias battery. Set channel switch between channels to break channel coil contact: VTVM reading will change when coil contact is broken.	A7 for minimum.
6	*19.75 MC				A8 for minimum.
7	25.3 MC	Connect Generator and VTVM same as in step 1.		Use 3 volt bias battery. Set channel switch same as in step 1.	Readjust A1 and A2 for maximum.
8	To insure correct IF alignment, make the "IF Response Curve Check" given below.				

IF RESPONSE CURVE CHECK

(Using sweep generator and oscilloscope)

Receiver Controls and Bias Battery	Sweep Generator	Marker Generator	Oscilloscope	Instructions
Set Channel selector on channel 12 or an unassigned high channel. Picture control fully to the left. Connect negative of 3 volt bias battery to test point "T"; positive to chassis.	Connect high side to 6J6 mixer-osc. tube shield. Insulate tube shield from chassis, low side to chassis ground. Set sweep frequency to 23MC, and sweep width approximately 7MC.	If an external marker generator is used, loosely couple high side to sweep generator lead on tube shield, low side to chassis. Marker frequencies indicated on IF Response Curve.	Connect to test point "V". See figure 7. Marker pips on scope will be more distinct if a condenser from 100 mmfd to 1000 mmfd is connected across the oscilloscope input.	Check curve obtained against ideal response curve in fig. 5. Note tolerances on curve. Keep marker and sweep outputs at very minimum to prevent overloading. A reduction in sweep output should reduce response curve amplitude without altering the shape of the response curve. If the curve is not within tolerance or the markers are not in the proper location on the curve, touch-up with IF slugs as instructed below.

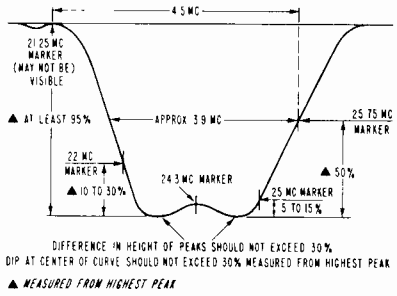

Figure 5. Ideal IF Response Curve.

Figure 6. IF Response Curves, Incorrect Shape.

If it is necessary to adjust for approximate equal peaks, carefully adjust slug A5 (23.5 MC). It should not be necessary to turn slug A5 more than one turn in either direction.

If the curve cannot be made to resemble the response curve shown at left, repeat all steps under "IF Amplifier and Trap Alignment" making sure that generator frequencies are accurate and adjustments are carefully made. If a satisfactory curve cannot be obtained after repeating these steps, it may be necessary to change IF amplifier tubes or check for a defective circuit component to be sure that each stage is operating properly.

* Before proceeding, be sure to check the signal generator used in alignment against a crystal calibrator or other frequency standard for absolute frequency calibration required for this operation.

Admiral

4.5 MC SOUND IF AND TRAP ALIGNMENT

22C2 and 22E2

a. Connect signal generator high side to Pin 1 of V304 (12AU7 or 12AT7) through a .01 mfd. condenser, connect low side to chassis.
b. Allow about 15 minutes for receiver and test equipment to warm up.
c. Set Picture control fully to the left (counterclockwise).
d. Use a NON-METALLIC alignment tool. If Ratio Det. Transformer (T201) has hollow core slugs, bottom slug adjustment A11 can be made from top of chassis, if you use alignment tool #98A30-7 obtainable from Admiral Distributor.

Step	Signal Gen. Freq. (MC)	VTVM Connections	Instructions	Adjust
	When using a signal generator, be sure to check it against a crystal calibrator or other frequency standard for accurate frequency calibration at 4.5 MC. Accuracy required is within one kilocycle. IMPORTANT: If a signal generator and frequency standard are not available, alignment can be made using a TV station signal. Tune in a station and follow steps 1, 2 and 3 below. If necessary use a higher scale on the VTVM.			
1	Set to exactly 4.5 MC	High side to test point "Y"; common to chassis.	Use lowest DC scale on VTVM.	A9, A10 and A11 for maximum (keep reducing generator output to keep VTVM at approx. 1 volt).
2		High side to test point "Z"; common to chassis.	Use zero center scale on VTVM, if available.	A12 for zero on VTVM (the correct zero point is located between a positive and a negative maximum). If A12 was far off, repeat step 1.
3		High side to test point "Y"; common to chassis.	Connect a 10 mmfd. condenser from pin 8 of V305 (6AC7) to pin 8 of V304 (12AU7 or 12AT7).	A13 for minimum.

RF AND MIXER ALIGNMENT

a. Connect negative of 3 volt bias battery to AGC buss (test point "T"), positive to chassis. If it is difficult to obtain a curve of sufficient amplitude, remove battery and connect a wire jumper from test point "T" to chassis.
b. Connect sweep generator to antenna terminals. If sweep generator does not have a built-in marker generator, loosely couple a marker generator to the antenna terminals. To avoid distortion of the response curve, keep sweep generator output at a minimum, marker pips just barely visible.
c. Connect oscilloscope through a 10,000 ohm resistor to test point "W" on tuner (figure 10). Keep scope leads away from chassis.
d. Allow about 15 minutes for receiver and test equipment to warm up.

Step	Marker Gen. Freq. (MC)	Sweep Gen. Frequency	Instructions
1	193.25 MC (Video Carrier) 197.75 MC (Sound Carrier)	Sweeping Channel 10. See frequency table below.	Check for RF response curve below. Alternately adjust A15 and A16 (figure 10) as required to obtain equal peak amplitudes and symmetry consistent with proper bandwidth and correct marker location.
2	83.25 MC (Video Carrier) 87.75 MC (Sound Carrier)	Sweeping Channel 6. See frequency table below.	Check for RF response curve below. Adjust A14 as required to obtain curve having maximum amplitude and flat top appearance consistent with proper bandwidth and correct marker location. After completing adjustment, recheck adjustment of step 1.
3	Set the sweep generator to sweep the channel to be checked. Set the marker generator for the corresponding video carrier frequency and sound carrier frequency.		Check each channel operating in the service area for curve shown below. In general, the adjustment performed in steps 1 and 2 are sufficient to give satisfactory response curves on all channels. However, if reasonable alignment is not obtained on a particular channel, (a) check to see that coils have not been intermixed, or (b) try replacing the pair of coils for that particular channel, or (c) repeat step 1 for a weak high channel as a compromise adjustment to favor the particular channel. Repeat step 2 for the weak low channel to favor the particular channel. If a compromise adjustment is made, other channels operating in the service area should be checked to make certain that they have not been appreciably affected.

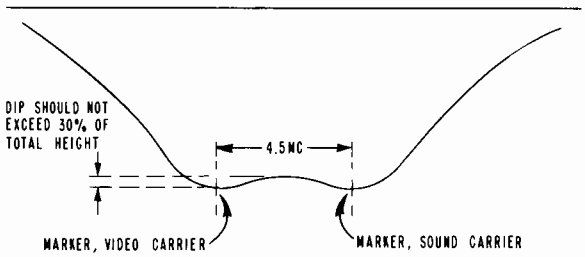

Full skirt of curve will not be visible unless generator sweep width extends beyond 10 MC.
Figure 9. RF Response Curve.

FREQUENCY TABLE

Channel Number	Channel Freq., MC	Video Carrier, MC	Sound Carrier, MC	HF Osc., MC
2	54- 60	55.25	59.75	81
3	60- 66	61.25	65.75	87
4	66- 72	67.25	71.75	93
5	76- 82	77.25	81.75	103
6	82- 88	83.25	87.75	109
7	174-180	175.25	179.75	201
8	180-186	181.25	185.75	207
9	186-192	187.25	191.75	213
10	192-198	193.25	197.75	219
11	198-204	199.25	203.75	225
12	204-210	205.25	209.75	231
13	210-216	211.25	215.75	237

Admiral

Chassis 22C2 and 22E2

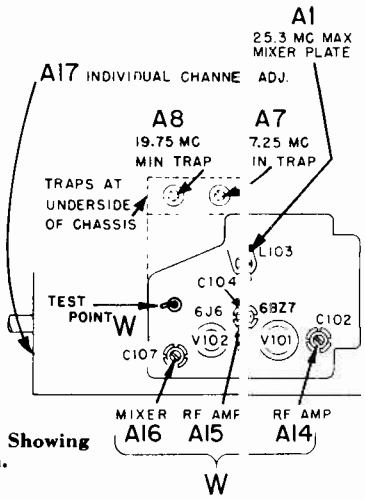

Figure 10. Top of TV Tuner, Showing Adjustment Location.

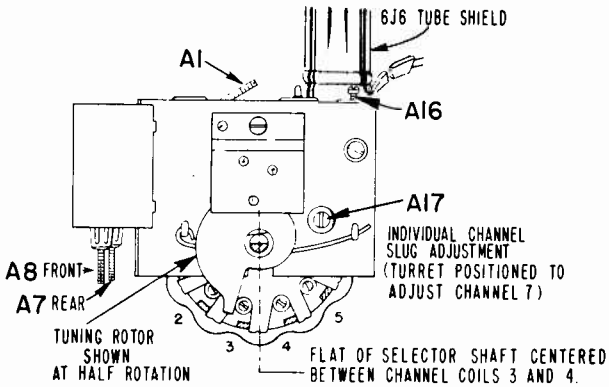

Figure 11. Front View of TV Tuner.

OVER-ALL RF AND IF RESPONSE CURVE CHECK

Receiver Controls and Bias Battery	Sweep Generator	Marker Generator	Oscilloscope	Instructions
Picture control fully to the left. Channel selector on channel 12 or other unassigned high channel. Connect negative of 3 volt bias battery to test point "T", positive to chassis.	Connect to antenna terminals. Set generator to sweep channel selected. Keep generator output as low as possible, to prevent overloading. See frequency table on opposite page.	If an external marker generator is used, loosely couple high side to sweep generator lead. Marker frequencies are shown in frequency table on opposite page.	Connect to point "V". See figure 7.	Compare the response curve obtained against the ideal curve shown in figure 12. If the curve is not within tolerance, touch up the IF slug as instructed below. It should never be necessary to turn slugs more than one turn in either direction. If the curve is satisfactory on the channel checked, all other channels should also be satisfactory. IMPORTANT: When sweep output is reduced, response curve amplitude on scope should also decrease, but curve shape should remain the same. If curve shape changes, reduce sweep output and/or the scope gain until the shape does not change.

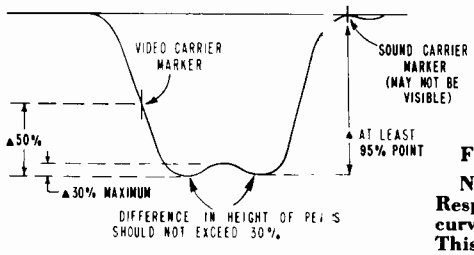

Figure 12. Ideal Over-all RF and IF Response Curve.

Note that video carrier (marker) on the "Over-all RF-IF Response Curve" will appear on the opposite side of the curve as compared to the "IF Response Curve" figure 5. This is due to action of the mixer tube.

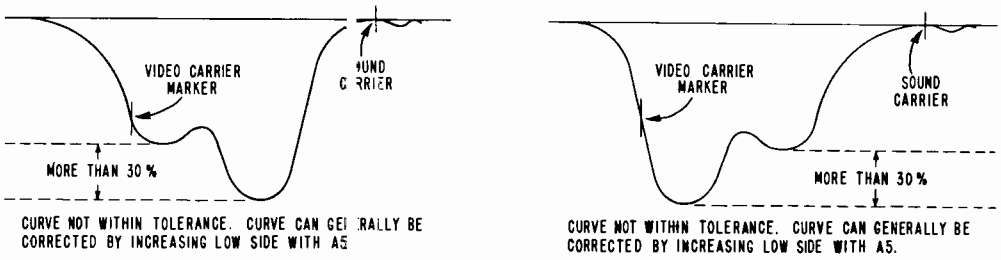

Figure 13. Over-all RF and IF Response Curves, Incorrect Shape.

HF OSCILLATOR ADJUSTMENT

(Using a signal generator)

Receiver Control Settings	Signal Generator	Instructions
Set channel selector for each channel to be adjusted. Set "Tuning" control at half rotation. Turn volume control fully to the right (clockwise).	Connect to antenna terminals. Set generator to exact frequency of HF oscillator. See frequency table on opposite page. *Set generator for maximum output.*	Connect a wire jumper from test point "W" on the tuner to test jack "Z". Remove the ratio detector tube V202 (6AL5). Carefully adjust the individual oscillator slug A17 until a whistle (beat) is heard in the speaker of the receiver.

Admiral Corporation
Chassis 22C2 & 22E2
(material continued)

WAVEFORM DATA

Waveforms taken with picture control set fully to the right, all other controls set for normal picture (in sync). DX Range Finder control set fully to the left (at "0" position). Warning: Incorrect adjustment of the DX Range Finder control will cause waveform distortion.

Waveforms at video and sync stages obtained with transmitted signal input to receiver.

The oscilloscope sweep is adjusted for 30 cycles (which is one-half of the vertical frequency), or for 7875 cycles (which is one-half of the horizontal frequency) so that two pulses appear on the screen.

The peak-to-peak voltage readings shown are subject to some variations due to response of the oscilloscope and parts tolerances.

TV VOLTAGE DATA

- PICTURE control turned fully clockwise. CHANNEL control set on an unused channel. Other front controls set at approximately half rotation. Vert. Lin. and Height set at approximately half rotation. DX Range Finder control set fully to the left (at "O" position).
- Antenna disconnected from set with terminals shorted.
- Line voltage 117 volts AC.
- Voltages measured with a vacuum tube voltmeter between tube socket terminals and chassis, unless otherwise indicated.
  Voltages at V306 measured from top of socket with tube removed.
- Voltages marked with an asterisk * will vary widely with control setting.
  In combination models, B+ voltages in TV chassis will be slightly higher when set is switched to radio position. Alternate voltage readings for radio and TV are shown for sound output tube V204 (6V6GT).

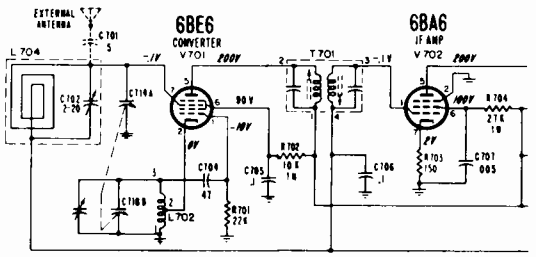

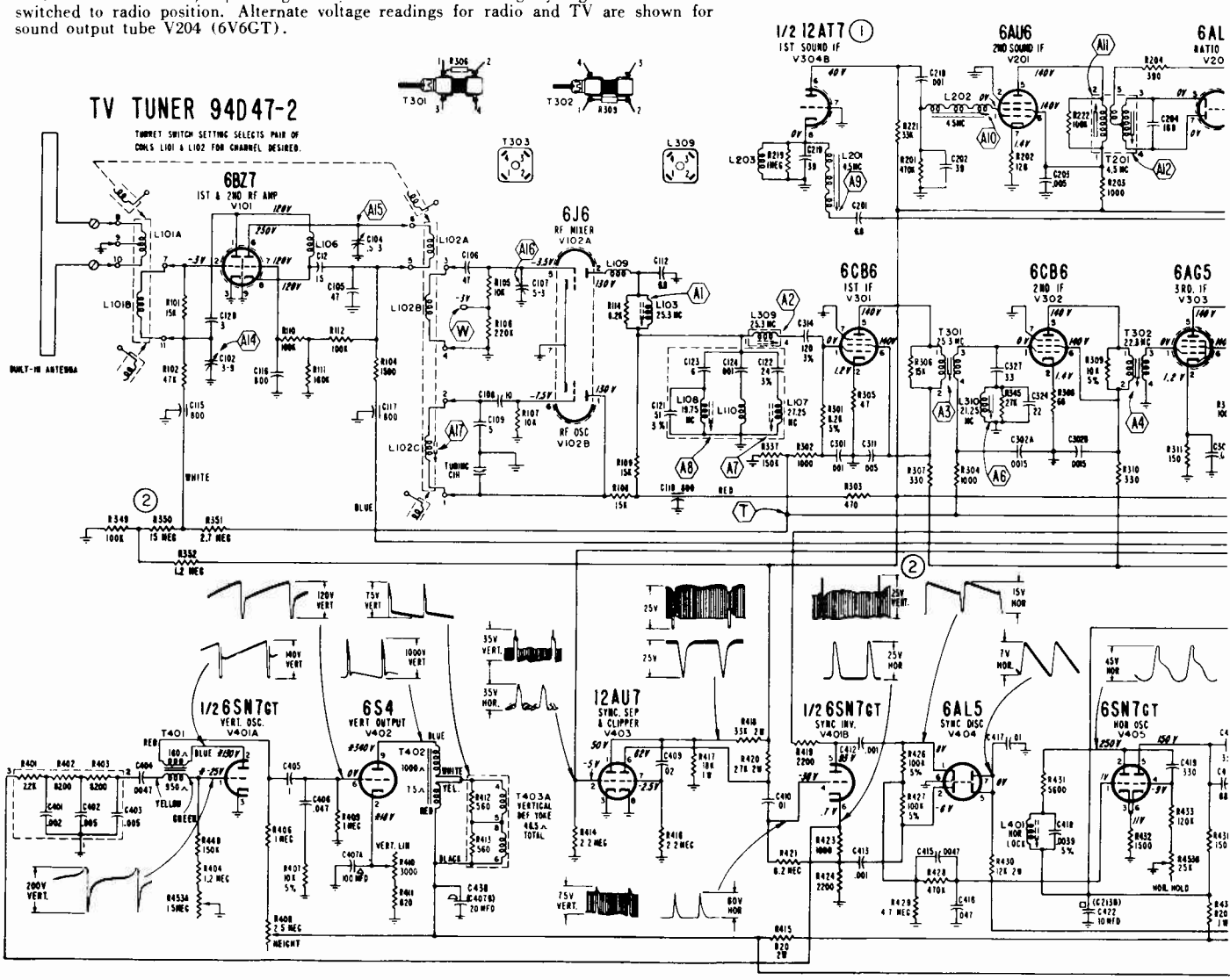

Admiral Corporation

Schematic for 22E2 Television and Radio Chassis

Chassis 22C2 is used in television only models and is exactly the same except for radio section and switching arrangement.

SCHEMATIC NOTES

Run numbers are rubber stamped at the rear of the chassis. Numerical symbols ①, ②, ③, etc. on schematic, indicate a production change

(A1), (A2),.....(Y), (Z), etc. indicate alignment points and alignment connections.

IMPORTANT: Before making waveform and voltage measurements, see instructions on adjoining page.

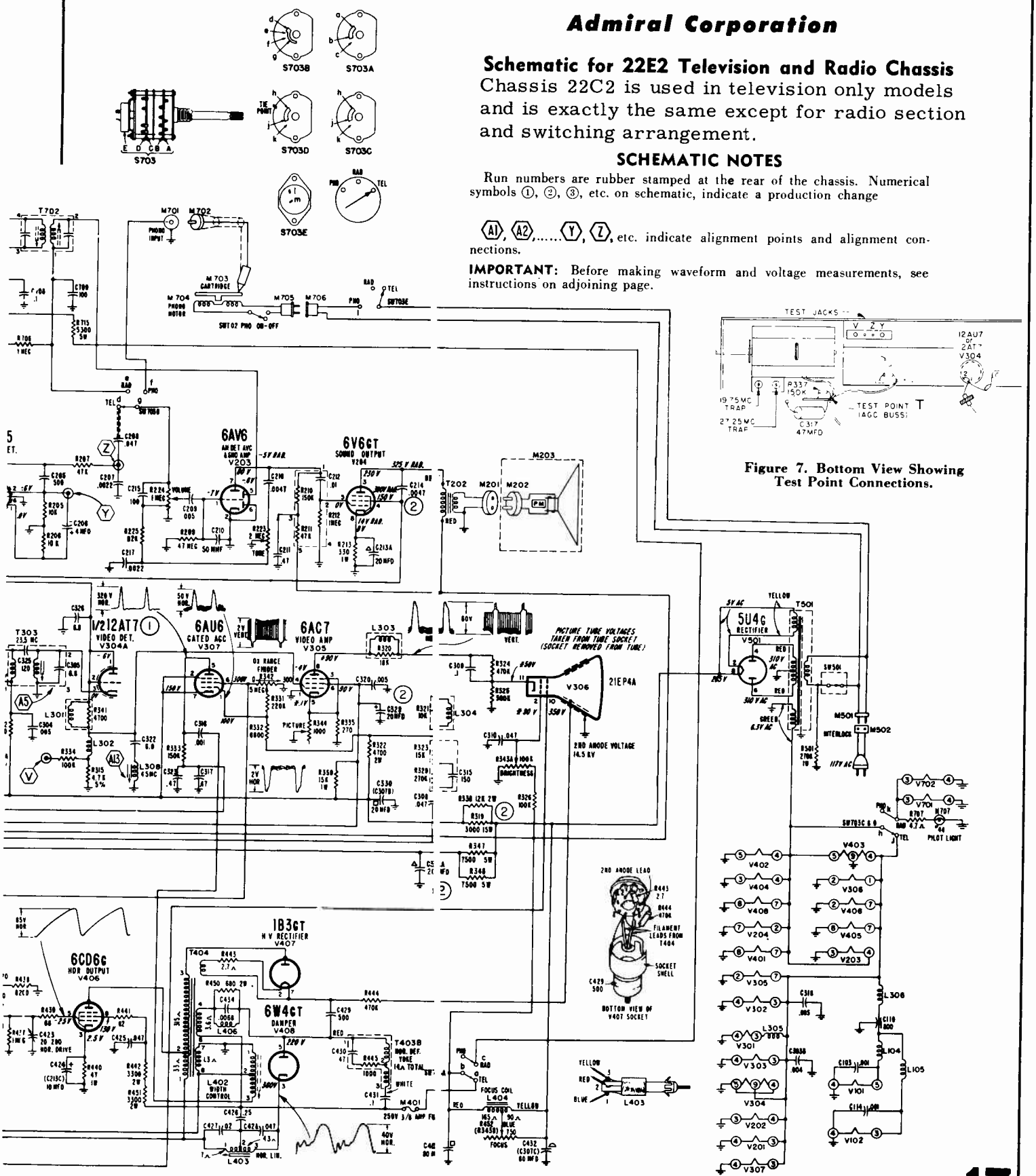

Figure 7. Bottom View Showing Test Point Connections.

Admiral

SERVICE HINTS

22C2 and 22E2

TROUBLE SHOOTING

No picture or sound: Raster OK. Incorrect adjustment of the DX Range Finder control in a weak signal area may result in complete loss of picture and sound. In strong signal areas, incorrect adjustment may also result in picture bending, excessive contrast and poor sync. See instructions for adjustment on page 3.

No sound and no raster. In the 22C2 chassis, no sound and no raster or distorted sound and no raster can be due to a blown fuse M401.

EXCESSIVE SNOW IN PICTURE

Excessive snow in the picture can be caused by faulty tubes in the receiver. Check receiver as follows:

Short circuit the antenna terminals and turn the picture control (contrast) fully clockwise.

Connect a vacuum tube voltmeter from test point "V" to chassis. Set the channel selector on an unassigned channel. If the voltmeter reading exceeds .6 volt negative, excessive receiver (tube) noise is indicated. This condition can usually be corrected by tube substitution. Substitute tubes in the following order: Video detector tube V304, RF oscillator tube V102, RF amplifier tube V101 and IF amplifier tube V301, V302 and V303.

Corona or arcing in the second anode supply can also cause a high noise reading at the video detector resulting in excessive snow in weak signal areas.

MISCELLANEOUS TROUBLES DUE TO FAULTY TUBES

Faulty tubes cause the majority of receiver troubles. The list below contains most common troubles which are generally due to faulty tubes.

a. Poor fringe area reception due to low B plus voltage. Check the 5U4G tube.
b. Poor fringe area reception due to low sensitivity. Check the 6CB6, 6AG5 and 6BZ7 tubes.
c. Picture and sound separated due to IF oscillation. Check the 6CB6 and 6AG5 tubes.
d. Picture bending caused by leakage between tube elements. Check the 6CB6 tubes.
e. Poor sync stability, usually more noticeable in vertical circuit. Check 12AU7 tube.
f. Washed out picture due to negative grid current. Check 6AC7 tube.

DISTORTED SOUND

Distorted sound can be caused by misalignment of the ratio detector transformer T201. This misalignment is sometimes due to frequency drift of the ratio detector transformer. If realignment of the ratio detector transformer does not correct this trouble permanently, a permanent remedy for this trouble is to connect a 20 mmfd, —750 temperature coefficient, ceramic condenser (part number 65C6-26) in parallel with condenser C204 (180 mmfd, ceramic, connected across the secondary of the ratio detector transformer T201). Realign ratio detector after adding the 20 mmfd. condenser.

REPLACING FUSE M401

The horizontal output circuit of these receivers is protected by fuse M401 (.25 amp., 250 volts). This fuse is located in the rear of the high voltage compartment. To replace the fuse, remove the two screws at the base of the high voltage compartment and lift the cover away from the base.

REMOVING PICTURE WINDOW FOR CLEANING

If the picture window has a removable molding (at the top), remove the window by first removing the Phillips head screws and molding at the top of the picture window. Pull the top of the window away from the cabinet slightly and lift it up out of the channel at the bottom.

After cleaning the window, picture tube and picture tube mask as instructed below, install the window by placing the bottom edge in the channel and replace the molding. Use care when tightening screws on molding to prevent stripping.

CLEANING GLASS PICTURE WINDOW

Clean the picture mask using a soft cloth, dampened in mild soapy water. Clean the picture window and the face of the picture tube using a soft cloth, dampened with your favorite window cleaner. Wipe dry using a chamois or soft, lint free cloth. Only use cloths which are just dampened as presence of moisture or water inside the set may cause damage. Install the window as instructed above.

PRODUCTION CHANGES

CHANGE FOR INCREASED SOUND LEVEL

Run 1 in 22C2 and 22E2 chassis

Early production sets used a 12AU7 tube for video detector and first sound IF amplifier V304. Later production sets stamped Run 1 or higher used a 12AT7 tube for V304. The schematic figure 16 shows a partial circuit of the first IF amplifier in sets using the 12AU7 tube. Important: The 12AU7 and 12AT7 tubes are not directly interchangeable. Replace with same type tube used in receiver.

MECHANICAL CHANGE IN RADIO TUNER USED IN 22E2 CHASSIS

Mechanical changes were made to the later production radio tuner sub-chassis used in 22E2 combination models. The dimensions of the radio chassis were altered slightly and the mounting position of the gang condenser was changed.

Early production radio tuners used gang condenser (part number 68B53) which mounts in a vertical position. Later production radio tuners use gang condenser (part number 68B53-1) which mounts in a horizontal position.

6000 SERIES CHASSIS 330-332 CHASSIS 319-331

Arvin INDUSTRIES INC.

Models 6173, 6175TM, 6179TM, 6213TB, 6213TM, 6215CB, and 6215CM.

(Other suffix letters may be used. UHF means UHF tuner included.)

Chassis TE330, TE332, are the same as TE319, TE331, but include UHF.

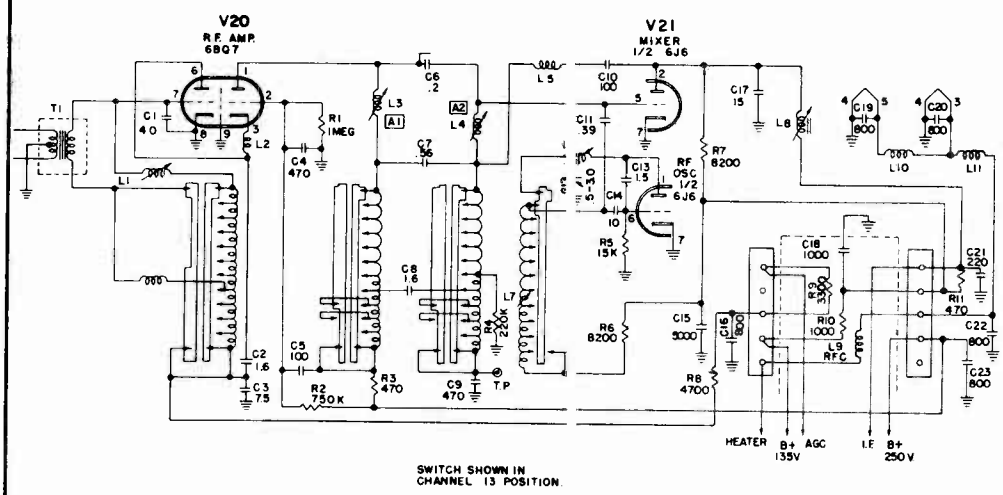

TUNER UNIT

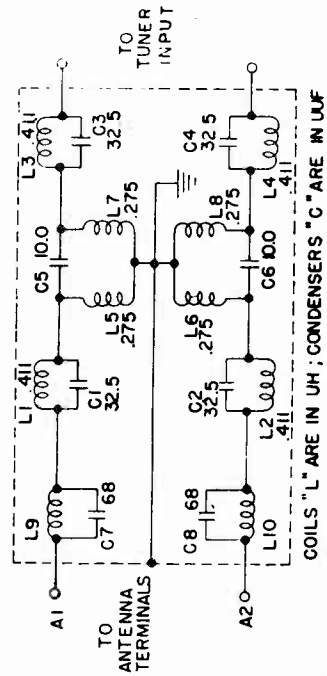

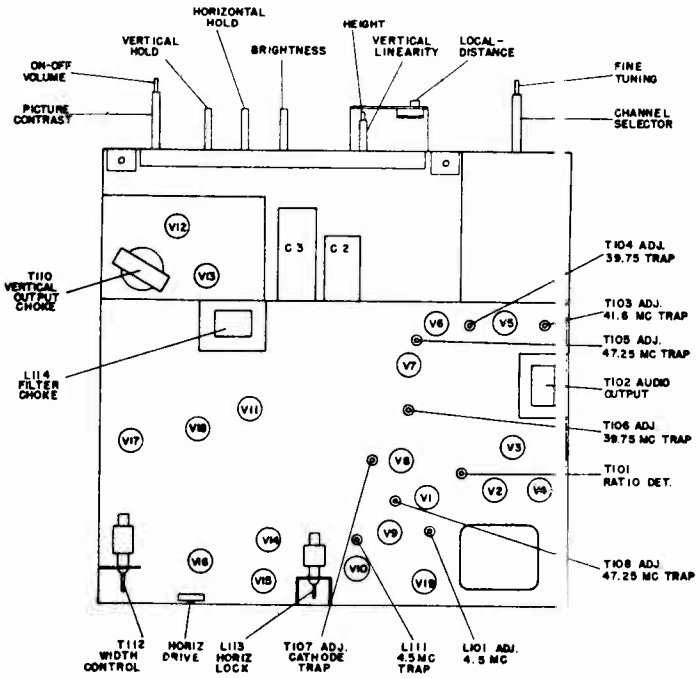

BOTTOM VIEW

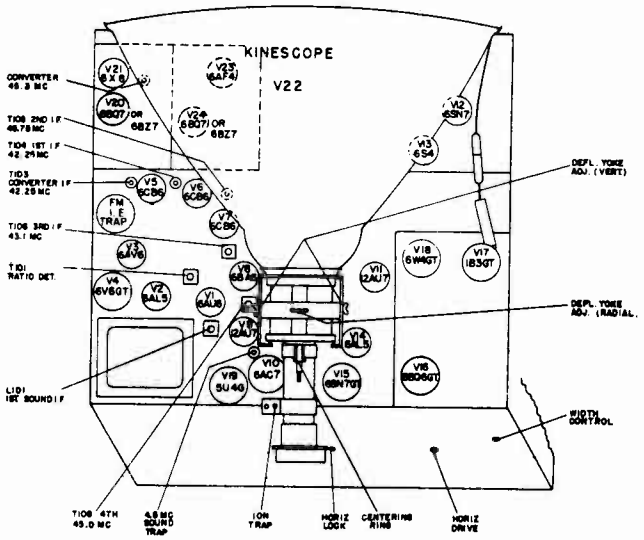

TOP VIEW — CHASSIS

See pages 20 and 21 for circuit diagram, and alignment table on page 22.

Arvin television CHASSIS TE 330-1

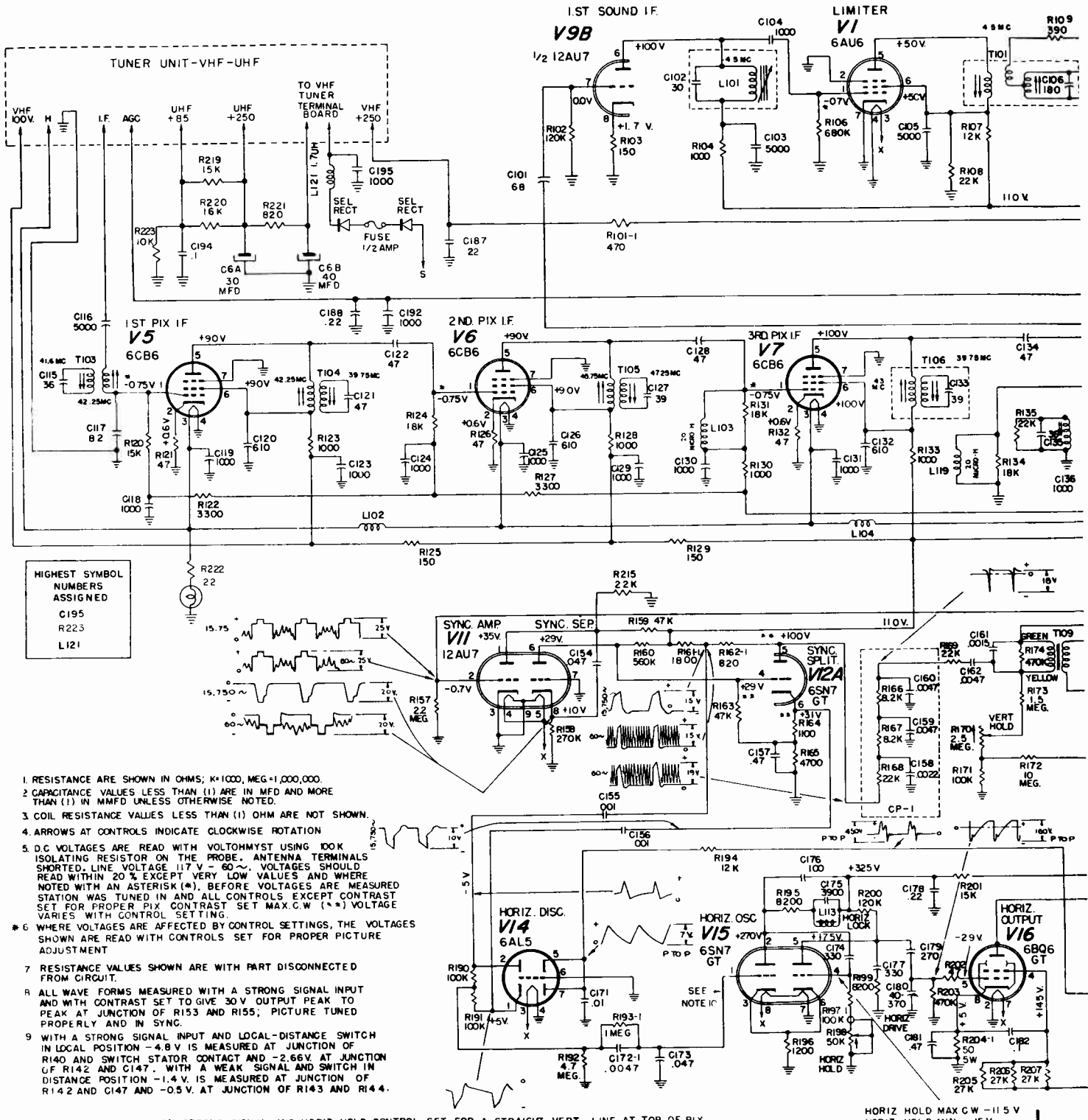

1. RESISTANCE ARE SHOWN IN OHMS; K=1000, MEG=1,000,000.
2. CAPACITANCE VALUES LESS THAN (1) ARE IN MFD AND MORE THAN (1) IN MMFD UNLESS OTHERWISE NOTED.
3. COIL RESISTANCE VALUES LESS THAN (1) OHM ARE NOT SHOWN.
4. ARROWS AT CONTROLS INDICATE CLOCKWISE ROTATION
5. D.C VOLTAGES ARE READ WITH VOLTOHMYST USING 100K ISOLATING RESISTOR ON THE PROBE. ANTENNA TERMINALS SHORTED. LINE VOLTAGE 117 V - 60 ~. VOLTAGES SHOULD READ WITHIN 20 % EXCEPT VERY LOW VALUES AND WHERE NOTED WITH AN ASTERISK (*). BEFORE VOLTAGES ARE MEASURED STATION WAS TUNED IN AND ALL CONTROLS EXCEPT CONTRAST SET FOR PROPER PIX CONTRAST SET MAX.C.W (**) VOLTAGE VARIES WITH CONTROL SETTING.
6. * WHERE VOLTAGES ARE AFFECTED BY CONTROL SETTINGS, THE VOLTAGES SHOWN ARE READ WITH CONTROLS SET FOR PROPER PICTURE ADJUSTMENT
7. RESISTANCE VALUES SHOWN ARE WITH PART DISCONNECTED FROM CIRCUIT.
8. ALL WAVE FORMS MEASURED WITH A STRONG SIGNAL INPUT AND WITH CONTRAST SET TO GIVE 30 V OUTPUT PEAK TO PEAK AT JUNCTION OF R153 AND R155; PICTURE TUNED PROPERLY AND IN SYNC.
9. WITH A STRONG SIGNAL INPUT AND LOCAL-DISTANCE SWITCH IN LOCAL POSITION -4.8 V IS MEASURED AT JUNCTION OF R140 AND SWITCH STATOR CONTACT AND -2.66V. AT JUNCTION OF R142 AND C147. WITH A WEAK SIGNAL AND SWITCH IN DISTANCE POSITION -1.4 V. IS MEASURED AT JUNCTION OF R142 AND C147 AND -0.5 V. AT JUNCTION OF R143 AND R144.
10. WITH SET TUNED IN ON STRONG SIGNAL, AND HORIZ HOLD CONTROL SET FOR A STRAIGHT VERT LINE AT TOP OF PIX, VOLTAGE SHOULD READ APPROX ZERO VOLTAGE SHOULD GO NEGATIVE WHEN CONTROL IS TURNED CCW FROM ABOVE SETTING AND PIX SHOULD SHIFT TO THE LEFT. VOLTAGE SHOULD GO POSITIVE WHEN CONTROL IS TURNED C W. FROM ZERO VOLTAGE AND PIX SHOULD SHIFT TO THE RIGHT

ARVIN Chassis TE330-1 Circuit Diagram (Differs from TE330 and TE332 as explained in note below and differs from TE319, TE331 in UHF tuner.

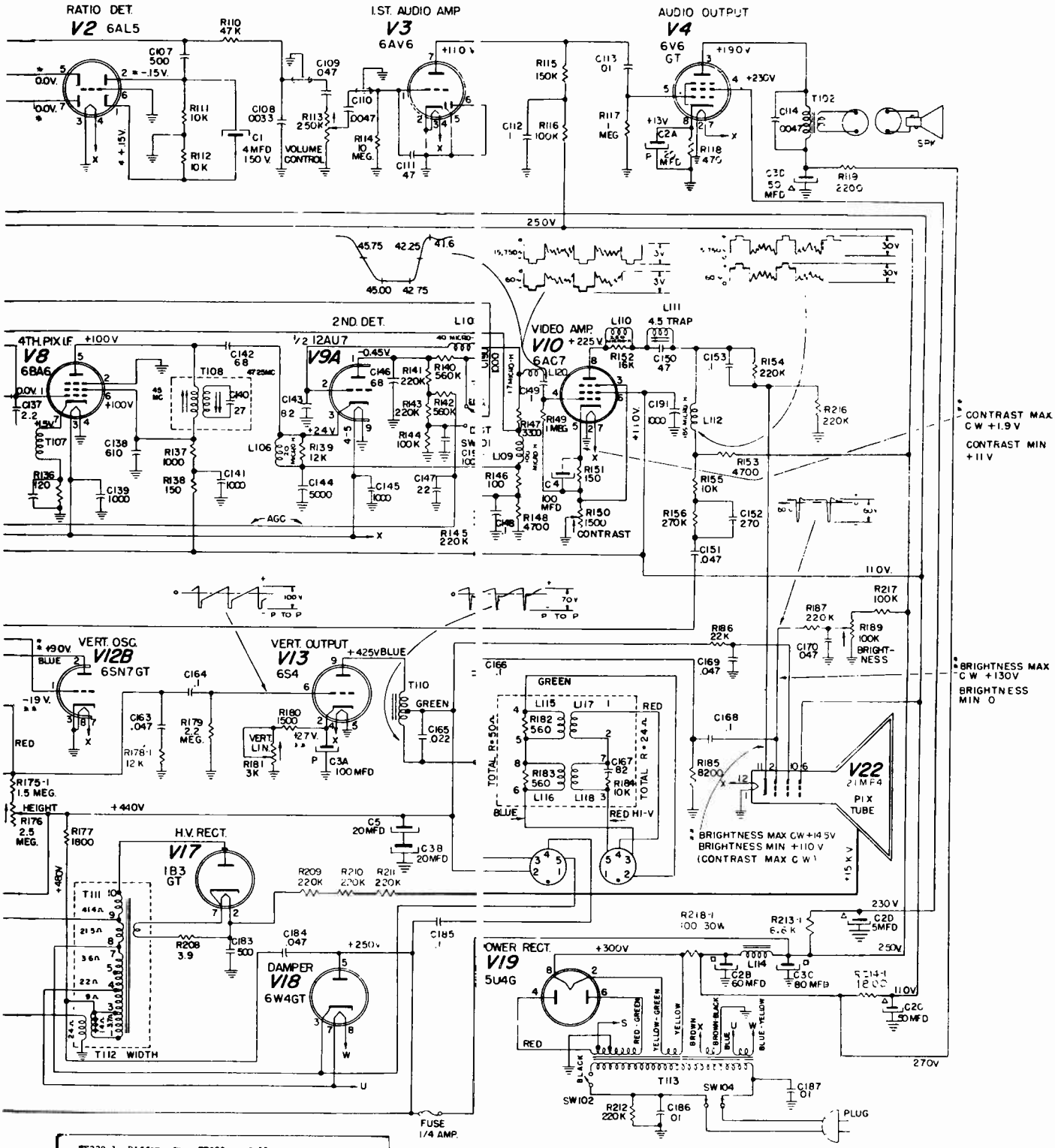

TE330-1 Differs from TE330 as follows:

C195 (1000 mmf. Disc.) added in parallel with C27 (B from Selenium Rectifier)
L121 (1.7 uh) added in series with Selenium Rectifier to Dual Tuner.

Alignment information is given on page 22, over.

ARVIN Chassis TE319, TE330, TE331, TE332, ALIGNMENT, continued.

(Refer to page 19 for chassis views.)

VIDEO I.F. AND TRAP ALIGNMENT

1. SET TUNER TO CHANNEL 9 – 10 OR 11.
2. SET LOCAL-DISTANCE SWITCH IN LOCAL POSITION.
3. CONNECT A 3V BIAS TO THE JUNCTION OF R141 & R143 AND GROUND.
4. MAKE SURE THE T.V. RECEIVER, SIGNAL GENERATORS AND SCOPE ARE BONDED BY A COMMON GROUND.

STEP	EQUIPMENT	CONNECTION	FREQUENCIES	ADJUSTMENT	INSTRUCTIONS
1.	V.T.V.M.	ACROSS R147			ISOLATE V.T.V.M. LEAD WITH 18K RESISTOR SET ON LOWEST SCALE.
2.	R.F. SIGNAL GENERATOR	TUNER TEST POINT	39.75	T104 1ST. I.F. T106 3RD. I.F. { TUNE BOTTOM FOR MINIMUM	
3.	SAME	SAME	41.6	T103 CONVERTER I.F. T107 CATHODE TRAP { TUNE BOTTOM FOR MINIMUM	
4.	SAME	SAME	47.25	T105 2ND I.F. T108 4TH I.F. { TUNE BOTTOM FOR MINIMUM	
5.	SAME	SAME	45.3	T1 CONVERTER COIL ON TUNER { TUNE TOP FOR MAXIMUM	START WITH CORE ALL THE WAY IN AND TUNE OUT.
6.	SAME	SAME	45.	T108 4TH. I.F. { TUNE TOP FOR MAXIMUM	
7.	SAME	SAME	43.1	T106 3RD. I.F. { TUNE TOP FOR MAXIMUM	
8.	SAME	SAME	45.75	T105 2ND. I.F. { TUNE TOP FOR MAXIMUM	
9.	SAME	SAME	42.25	T103 CONVERTER I.F. T104 1ST. I.F. { TUNE TOP FOR MAXIMUM	
10.	SAME	TO CHASSIS NEAR 1ST. I.F. TUBE V5	45.75 45 41.6 42.75 42.25		USED AS A MARKER GENERATOR
11.	OSCILLOSCOPE	JUNCTION C149 & L120			ISOLATE SCOPE LEAD WITH 18K RESISTOR
12.	SWEEP GENERATOR	ANTENNA TERMINALS	CHANNEL 10	TOUCH UP TOP CORES FOR DESIRED RESPONCE CURVE	RECEIVER TUNER SET TO CHANNEL 10
13.	SAME	SAME	MARKER 41.6	T107 CATHODE TRAP	SEE CURVES BELOW
14.	SAME	SAME	ALL CHANNELS	CHECK CURVE ON ALL CHANNELS	

A. T105 AND TUNER COIL AFFECT SLOPE ON LEFT SIDE.

B. T106 AND T108 AFFECT TILT OF CURVE.

C. T103 AND T104 AFFECT WIDTH OF CURVE AND SLOPE OF RIGHT SIDE.

INCREASE SCOPE GAIN. TUNE T107 UNTIL TRACE LOOKS LIKE THIS.

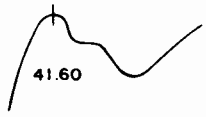

POSSIBLE POSITIONS OF CURVE AFFECTED BY CATHODE TRAP T107

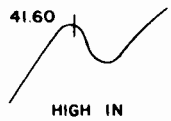

HIGH IN FREQUENCY

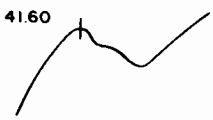

CORRECT

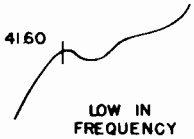

LOW IN FREQUENCY

SOUND I.F. ALIGNMENT AND 4.5 TRAP ALIGNMENT

STEP	EQUIPMENT	CONNECTION	FREQUENCIES	ADJUSTMENT	INSTRUCTIONS
1	V. T. V. M.	PIN 1 V2 TO GROUND RATIO DETECTOR			SET ON 10 VOLT SCALE
2	SIGNAL GENERATOR	JUNCTION OF L120 AND C149	4.5 MC	BOTTOM T101 RATIO DET. TOP L101 1ST. SOUND I.F. TUNE FOR MAX. ON VTVM	SET GENERATOR OUTPUT TO READ APPROX. 5 VOLT ON V.T.V.M.
3.	V. T. V. M.	JUNCTION OF R110 AND C108		TUNE TOP OF T101 RATIO DET. FOR ZERO.	SET METER ON LOWEST SCALE TUNING T101 SHOULD SWING METER ABOVE & BELOW ZERO
4	SAME	SAME	SAME	CHECK { TUNE GENERATOR ABOVE AND BELOW 4.5MC	POSITIVE AND NEGATIVE PEAKS SHOULD READ WITHIN 30 %
5.	V.T.V.M.	PIN 1 V2 TO GROUND RATIO DETECTOR			SET ON 10 VOLT SCALE
6.	SIGNAL GENERATOR	JUNCTION OF L112 AND R153 USE .01 ISOLATING CAP	4.5 MC	TUNE 4.5 TRAP L111 FOR MINIMUM ON VTVM	REMOVE VIDEO AMP V10 CONNECT 200μμf CAPACITOR BETWEEN PIN 8 AND PIN 4

7200 SERIES CHASSIS 337-341

Arvin INDUSTRIES INC.

Models 7210CB, 7210CM, 7210CR, 7212CFP, 7212MEA, 7214CM, 7216CB, 7218CB, 7218CM, 7219CM. (Some with additional suffix UHF.)

TE341 is the same as TE337, but includes UHF.

ALIGNMENT (Continued on page 26)

CHART I — AGC ADJUSTMENTS

EQUIPMENT

1. VACUUM TUBE VOLTMETER
2. 0 TO -30 BIAS SUPPLY (VARIABLE)

SUGGESTED BIAS SUPPLY

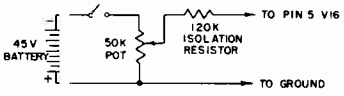

STEP	EQUIPMENT	CONNECTION	ADJUSTMENT	INSTRUCTIONS
1		PIN 1 V8		SHORT PIN 1 TO GROUND
2	VTVM	PIN 8 V11B	SET BIAS CONTROL R165 FOR ZERO VOLTS ON VTVM	
3			SET LOCAL-DISTANCE SWITCH ON DISTANCE	REMOVE KEYED AMPLIFIER TUBE V16
4	VARIABLE BIAS SUPPLY 0 TO-30	PIN 5 V16 TUBE SOCKET	SET FOR -7 VOLTS ON VTVM	
5	VTVM	ACROSS C7, 4 MFD, TUNER AGC LEAD	SET THRESHOLD CONTROL R207 FOR -1.75 ON VTVM	
6			MOVE LOCAL-DISTANCE TO LOCAL POSITION	VTVM SHOULD READ APPROXIMATLY -4 VOLT

AGC THRESHOLD (R207)

This control has been set at the factory for proper operation in both fringe and local areas and should be checked *only* if on strong signal "overload" operation is indicated or excessive snow on fringe signal is evident.

Local area—strong signal

1. Contrast setting for *normal* picture.
2. Set local-distance switch in "loc." position.
3. Set control full counter-clockwise.
4. Turn control clockwise until set does not overload (as evidenced by picture smear or bending).

Fringe area—weak signal

In isolated cases of operation where it appears that the "snow" is greater than normal for the particular area, the setting of this control should be checked. When the control is turned maximum counter-clockwise, the receiver will operate at maximum sensitivity. However, for this setting of the control, strong signals could cause "overloading," so it is advisable to approach the *optimum* setting of the above steps.

CHART II — I.F. ALIGNMENT

1. REMOVE KEYED AMPLIFIER TUBE V16
2. PLACE LOCAL-DISTANCE SWITCH IN LOCAL POSITION
3. CONNECT VARIABLE BIAS SUPPLY TO PIN 5 V16 TUBE SOCKET--SEE BIAS SUPPLY, CHART I

NOTE: BEFORE ATTEMPTING I.F. ALIGNMENT, COMPLETE AGC ADJUSTMENTS CHART I.

STEP	EQUIPMENT	CONNECT TO	FREQUENCIES	ADJUSTMENT	INSTRUCTIONS
1	VTVM	PIN8 OF V11B		SET BIAS SUPPLY TO READ ZERO VOLT	ISOLATE VTVM LEAD WITH 27K ISOLATING RESISTOR WITH 3000U BY PASS CONDENSER TO GROUND ON VTVM SIDE OF RESISTOR
2	VTVM	PIN 1 OF V10			
3	R.F. SIGNAL GENERATOR	TUNER TEST POINT	39.75 MC	TOP T104 FOR MINIMUM	VTVM ON LOW SCALE
4	R.F. SIGNAL GENERATOR	TUNER TEST POINT	41.25 MC	BOTTOM T105 FOR MINIMUM	
5	R.F. SIGNAL GENERATOR	TUNER TEST POINT	47.25 MC	BOTTOM T106 FOR MINIMUM	
6	R.F. SIGNAL GENERATOR	TUNER TEST POINT	43.5 MC	TOP T105 FOR MAXIMUM	
7	R.F. SIGNAL GENERATOR	TUNER TEST POINT	42 MC	TOP T106 FOR MAXIMUM	CHECK STEPS 5 AND 6
8	R.F. SIGNAL GENERATOR	TUNER TEST POINT	41.8 MC	BOTTOM T107 FOR MAXIMUM	
9	R.F. SIGNAL GENERATOR	TUNER TEST POINT	45.3 MC	BOTTOM T108 FOR MAXIMUM	
10	R.F. SIGNAL GENERATOR	TUNER TEST POINT THROUGH A 10K RESISTOR	41.8 MC	TUNER COIL FOR MAXIMUM	
11	R.F. SIGNAL GENERATOR	TUNER TEST POINT THROUGH A 10K RESISTOR	45.25 MC	BOTTOM T104 FOR MAXIMUM	
12	DETECTOR	LUG A OF T107 AND JUNCTION R133 AND R134			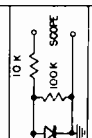
13	OSCILLOSCOPE	DETECTOR			
14	VTVM	PIN8 OF V11B		SET BIAS SUPPLY TO READ -6 VOLT	
15	R.F. SIGNAL GENERATOR	NEAR I.F. STRIP	45.75 MC 42.25 MC 47.25 MC 41.25 MC		USED AS MARKER GENERATOR
16	SWEEP GENERATOR	PIN 1 OF V6	41 TO 48 MC SWEEP	TOUCH UP T105 AND T106 FOR DESIRED RESPONSE CURVE	
17	DETECTOR	LUG B OF T105 AND JUNCTION OF R130 & C127			SAME AS DETECTOR USED IN STEP 12 WITH CONDENSER CONNECTED TO B OF T105
18	OSCILLOSCOPE	DETECTOR			
19	SWEEP GENERATOR	ANTENNA TERMINALS	CHANNEL 10	TOUCH UP TUNER COIL AND T104 FOR DESIRED RESPONSE	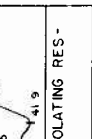
20	OSCILLOSCOPE	ACROSS 3900 LOAD R147			USE A 27K ISOLATING RESISTOR
21	SWEEP GENERATOR	ANTENNA TERMINALS	CHANNEL 10	TOUCH UP T107-T108-T109 FOR DESIRED OVERALL CURVE	

ARVIN Chassis TE341-3

See notes below how this chassis differ from earlier production runs; TE337 does not have UHF input.

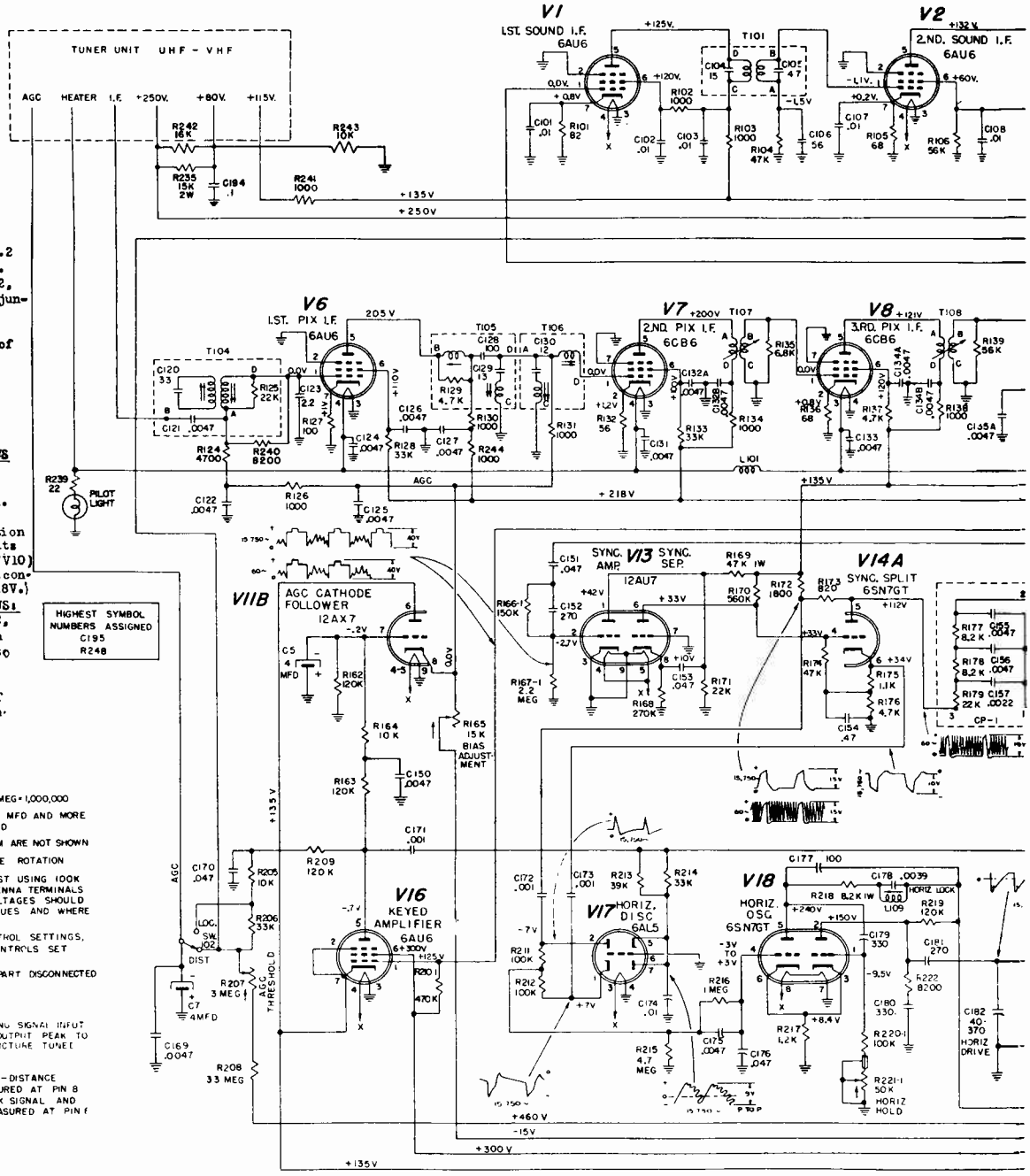

TE341-1 DIFFERS FROM TE341 AS FOLLOWS: R166,270K.,10% changed to R166-1,150K. 20%. R167,4.7 meg.,changed to R167-1,2.2 meg. R203,220K.,changed to R203-1,100K. R202 as shown in schematic deleted.R202, 1000 ohm.,10%,2W.,resistor added from junction of R161 & pin#6 of V12 to +218V. C10,5mfd.,250V.,electrolytic condenser added from junction of R161 and pin#6 of V12 to ground. R235 changed from 15K. 10%,2W.to15K.,5%,2W. R242,16K,5%,2W. added in parallel with R235. R235,10K. 5%,2W.added from junction of R235,R242 & C194 to ground. On VHF tuner,C24 changed from 47mmf.to 22mmf.

TE341-2 DIFFERS FROM TE341-1 AS FOLLOWS R220,91K.changed to R220-1,100K. R221, 30K.changed to R221-1,50K. R244,1000 ohms added. R245,56K.added.C195,.01mfd. added.R210,330Kchanged to R210-1,470K. R143,10K deleted.C4,5mfd deleted.Junction of C127 and R130 connected to +218 volts through R244(Was connected to Pin#6 of V10) Pin 6 of V10 connected to +135 V. R202 connected to +250 V.(Was connected to +218V.)

TE341-3 DIFFERS FROM TE341-2 AS FOLLOWS: R150,3.9K.changed to R150-1,2.7K. R182, 1.5 meg.changed to 2.5 meg. L104,120uh changed to 185 uh. R154,2.7K changed to R154-1,3.9K. L106,120uh changed to 185uh. L108,93uh changed to 185 uh. L105,93uh changed to 500 uh.C148,10mmf deleted.R246 25ohms,14W.added.R202 connection changed from+250Vto+218V.C14F 10mmf. deleted.

HIGHEST SYMBOL NUMBERS ASSIGNED
C195
R248

1. RESISTANCE ARE SHOWN IN OHMS K=1000, MEG=1,000,000
2. CAPACITANCE VALUES LESS THAN (1) ARE IN MFD AND MORE THAN (1) IN MMFD UNLESS OTHERWISE NOTED
3. COIL RESTANCE VALUES LESS THAN (1) OHM ARE NOT SHOWN
4. ARROWS AT CONTROLS INDICATE CLOCKWISE ROTATION
5. D.C. VOLTAGES ARE READ WITH VOLTOHMYST USING 100K ISOLATING RESISTOR ON THE PROBE. ANTENNA TERMINALS SHORTED. LINE VOLTAGE 117 V-60~ VOLTAGES SHOULD READ WITHIN 20% EXCEPT VERY LOW VALUES AND WHERE NOTED WITH AN ASTERISK (*)
6. WHERE VOLTAGES ARE AFFECTED BY CONTROL SETTINGS, THE VOLTAGES SHOWN ARE READ WITH CONTROLS SET FOR PROPER PICTURE ADJUSTMENT
7. RESISTANCE VALUES SHOWN ARE WITH PART DISCONNECTED FROM CIRCUIT
8. ALL WAVE FORMS MEASURED WITH A STRONG SIGNAL INPUT AND WITH CONTRAST SET TO GIVE 60V OUTPUT PEAK TO PEAK AT JUNCTION OF L108 AND R161; PICTURE TUNED PROPERLY AND IN SYNC
9. WITH A STRONG SIGNAL INPUT AND LOCAL-DISTANCE SWITCH IN LOCAL POSITION -8V IS MEASURED AT PIN 8 V11B AND -6.5V ACROSS C7 WITH A WEAK SIGNAL AND SWITCH IN DISTANCE POSITION -5V IS MEASURED AT PIN 8 V11B AND -1V ACROSS C7

HORIZONTAL LOCK ADJUSTMENT (Rear)

1. Set the Horizontal Hold Control to the center of its range.
2. Adjust the Horizontal Lock until picture is in sync. Then turn the Horizontal Lock right until the picture goes out of sync. Next turn the Horizontal Lock to the left until the picture just pulls into sync.
3. Turn the Horizontal Hold Control full left. Switch the Channel Selector off station then on again. The picture should then go out of sync. Turn the horizontal Hold Control full right. Switch the Channel Selector off station then on again. The picture should go out of sync.
4. Adjust the Horizontal Lock until the number of diagonal bars are the same for both the right and left *out of sync* positions.

VERTICAL PEAKING (R188)

1. Adjust height and vertical linearity controls as outlined above.
2. After a normal picture is tuned in, adjust the contrast control maximum to the left and adjust the brightness in order that the picture can be seen.
3. Adjust the centering ring until the top of the picture can be seen.
4. Adjust the vertical peaking control (R188) so that 4 or 5 faint horizontal lines (covering vertically approximately ½ inch) can be seen. This adjustment is made to give equal spacing of the individual raster lines.

ARVIN Chassis TE341-3

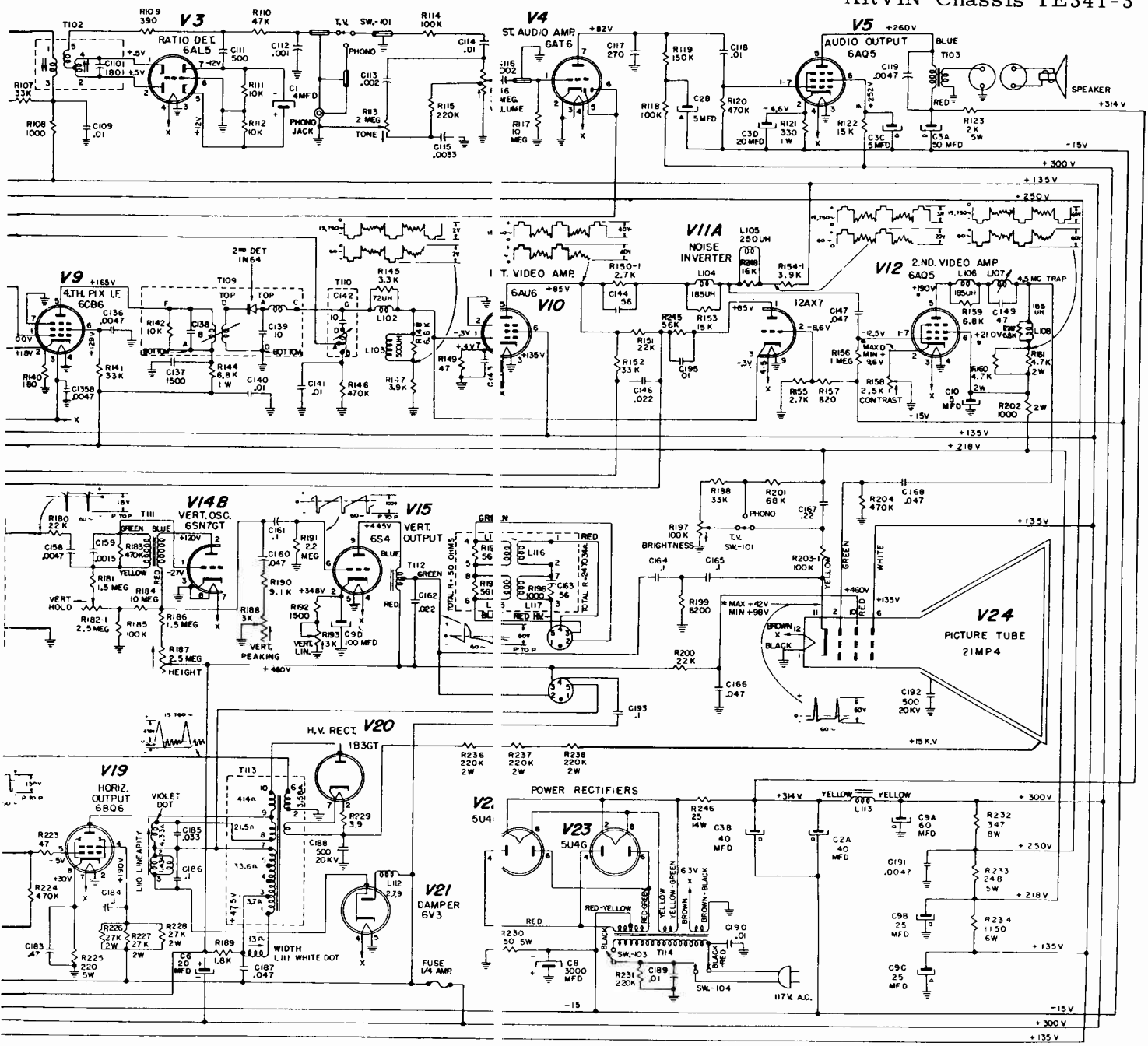

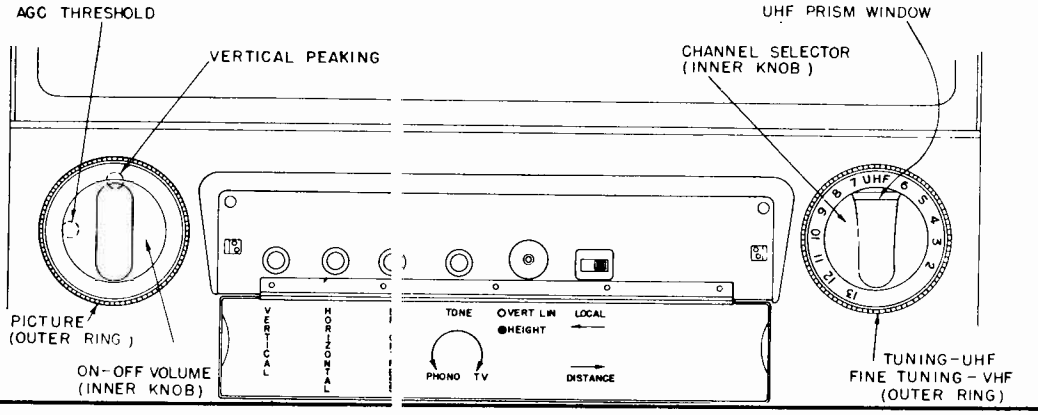

ARVIN Chassis TE337, TE341, ALIGNMENT, continued.

SOUND I.F. AND 4.5 MC TRAP ALIGNMENT

EQUIPMENT-4.5 MC SIGNAL GENERATOR, VTVM

STEP	EQUIPMENT	CONNECTION	FREQUENCIES	ADJUSTMENT	INSTRUCTIONS
1.	VTVM	PIN 5 OF V3			SET ON 10V SCALE. REMOVE V9 (4TH PICTURE I.F. TUBE).
2.	SIGNAL GENERATOR	PIN 1 OF V10	4.5 MC	BOTTOM T110 TOP & BOTTOM OF T101 & BOTTOM OF T102 FOR MAX. AFTER ADJUSTMENTS HAVE BEEN MADE, SET GENERATOR OUTPUT FOR 18V READING FOR NEXT STEP.	CALIBRATE 4.5 MC SIGNAL GENERATOR BEFORE USING--- PREFERABLY WITH A CRYSTAL.
3.	VTVM	JUNCTION OF C112 & R110		TUNE TOP OF T102 FOR ZERO ON VTVM	SET METER ON LOWEST SCALE TUNING T102 SHOULD SWING METER ABOVE AND BELOW ZERO.
4.	VTVM	JUNCTION OF C112 & R110	4.5 MC	CHECK- TUNE GENERATOR ABOVE & BELOW 4.5 MC.	POSITIVE AND NEGATIVE PEAKS SHOULD READ WITHIN 30%.
5.	VTVM	PIN 5 OF V3			SET ON LOW SCALE.
6.	JUMPER	JUNCTION OF C168 & R204 TO PIN 1 OF V2.			
7.	SIGNAL GENERATOR	PIN 1 OF SECOND VIDEO AMPLIFIER(V12) THROUGH A 100 UU CONDENSER.	4.5 MC	TUNE 4.5 MC TRAP L107 FOR MINIMUM ON VTVM.	

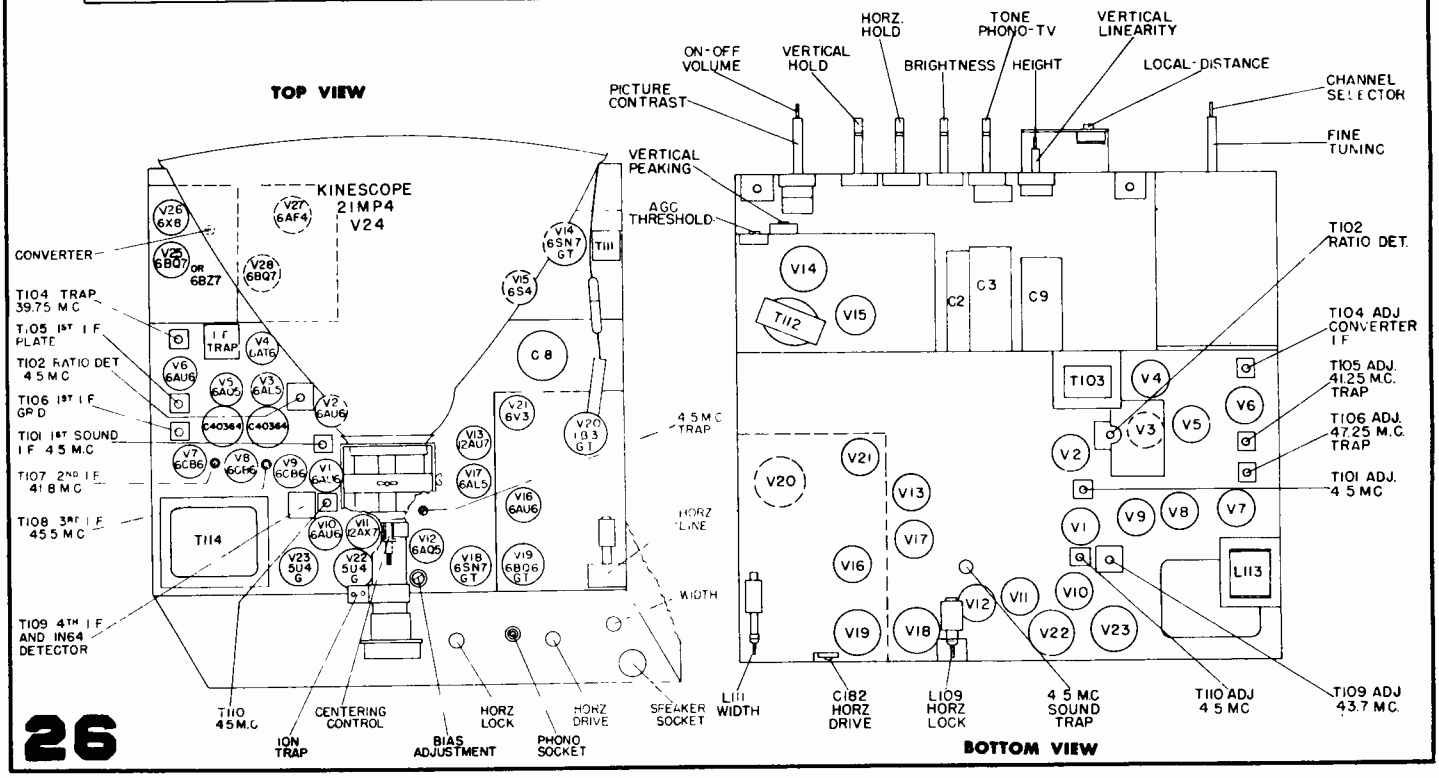

CBS Columbia

A Subsidiary of Columbia Broadcasting System Inc.

The service material on this page and the schematic diagram on the next two pages are correct for the following CBS-Columbia TV sets:

Chassis 817	Chassis 820	Chassis 821
Models	Models	Model
17C18	20M18	21C18
17M18	20M28	
17T18	20T18	

Chassis 817-1 and 820-1 are similar and the differences are explained in the schematic diagram.

TUBE LOC.	TUBE TYPE	PIN NUMBERS 1	2	3	4	5	6	7	8	9
		TUBE SOCKET VOLTAGES								
V1	6BC5	-1	0	0	6.2 ac	105	105	0		
V2	6J6	120	75	0	6.2 ac	-2.5	-4	0		
V3	6CB6	-0.4	0.6	6.0 ac	0	120	120	0		
V4	6CB6	-0.4	0.6	6.0 ac	0	120	120	0		
V5	6CB6	0	1.0	6.1 ac	0	120	120	0		
V6	6AL5	0	0	0	6.3 ac	0	0	-0.4		
V7	12BH7	90	-0.4	2.0	6.3 ac	6.3 ac	165 to [A] 175	0.5 to [A] 40	3.5 to [A] 70	0
V8	6AU6	-0.5	0	0	6.3 ac	120	50	0		
V9	6AL5	-0.5	-0.5	5.5 ac	0	0	0	-1.5		
V10	6SQ7GT	0	-1	0	0	0	85	6.3 ac	0	
V11	6V6GT	0	0	200	210	0	0	6.3 ac	10	
V12	12BH7	60	20	20	0	0	20	-0.4	0	6.3 ac
V13	12BZ7	90	-0.8	0	0	0	90	-0.9	0	6.3 ac
V14	12BH7	420	-.3 [D]	22 [D]	0	0	100 [G]	-30	0	6.3 ac
V15	6AL5	12	-12	0	5.5 ac	0.1	0	0.1		
V16	12BH7	290	0.1	15	6.3 ac	6.3 ac	120	-5	15	0
V17 [E]	6BQ6GT	-20	0	0	155	-20	0	6.3 ac	15	
V18	1X2A	High – Voltage Rectifier								
V19	6W4GT	320	0	525	0	310	0	525 [F]	525 [F]	
V20	5U4G		340		320 ac		320 ac.		340	
V21	17HP4 [B]	Pin 1: 0;	Pin 2:	3 to 6; [A]	Pin 10:	515;	Pin 11:	40 to 150; [C]	Pin 12:	6.3 ac;

NOTE: All voltages measured with V. T. V. M. from pin to ground with line voltage of 117V ac and antenna terminals shorted. Values are DC unless otherwise noted. The Phono-TV switch, if provided, is in the TV position.

[A] Varies with contrast (picture) setting.
[B] On 820 and 820-1 tube type is 20HP4A and Pin 6 = 515V
[C] Varies with brightness setting.
[D] Varies with linearity setting.
[E] Varies with Horizontal Hold setting.
[F] Pins 7 and 8 are filament terminals.
[G] Varies with height setting.

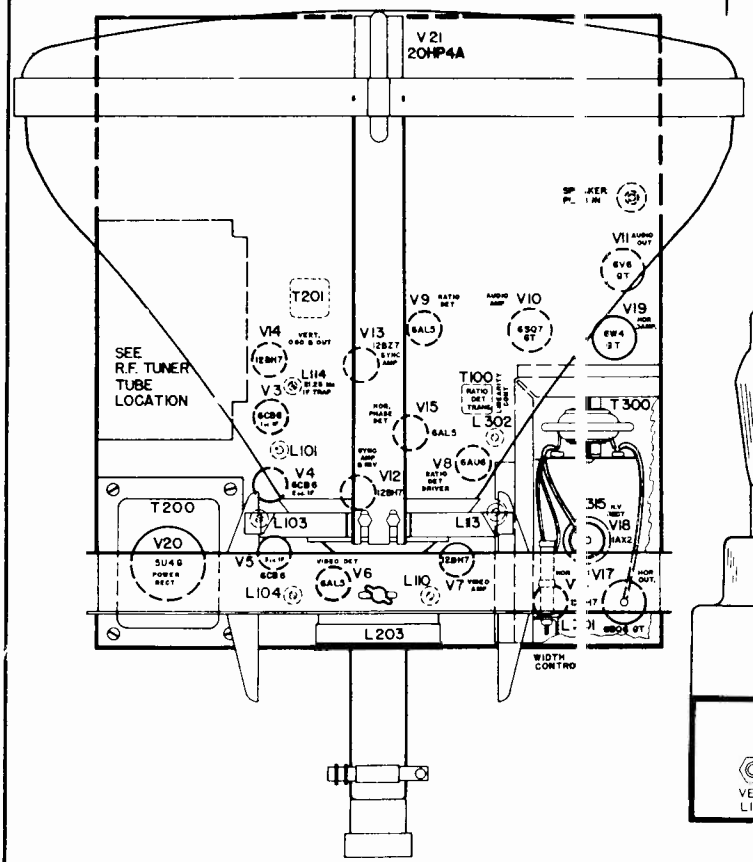

TUBE & TRIMMER LOCATION

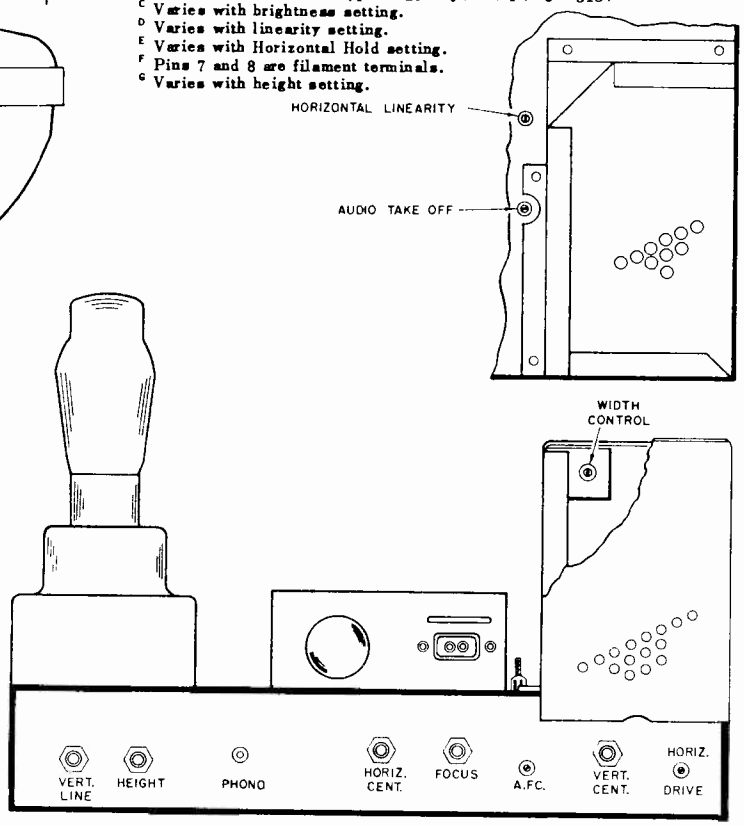

REAR CHASSIS CONTROLS

CBS-COLUMBIA Chassis 817, 820, 821

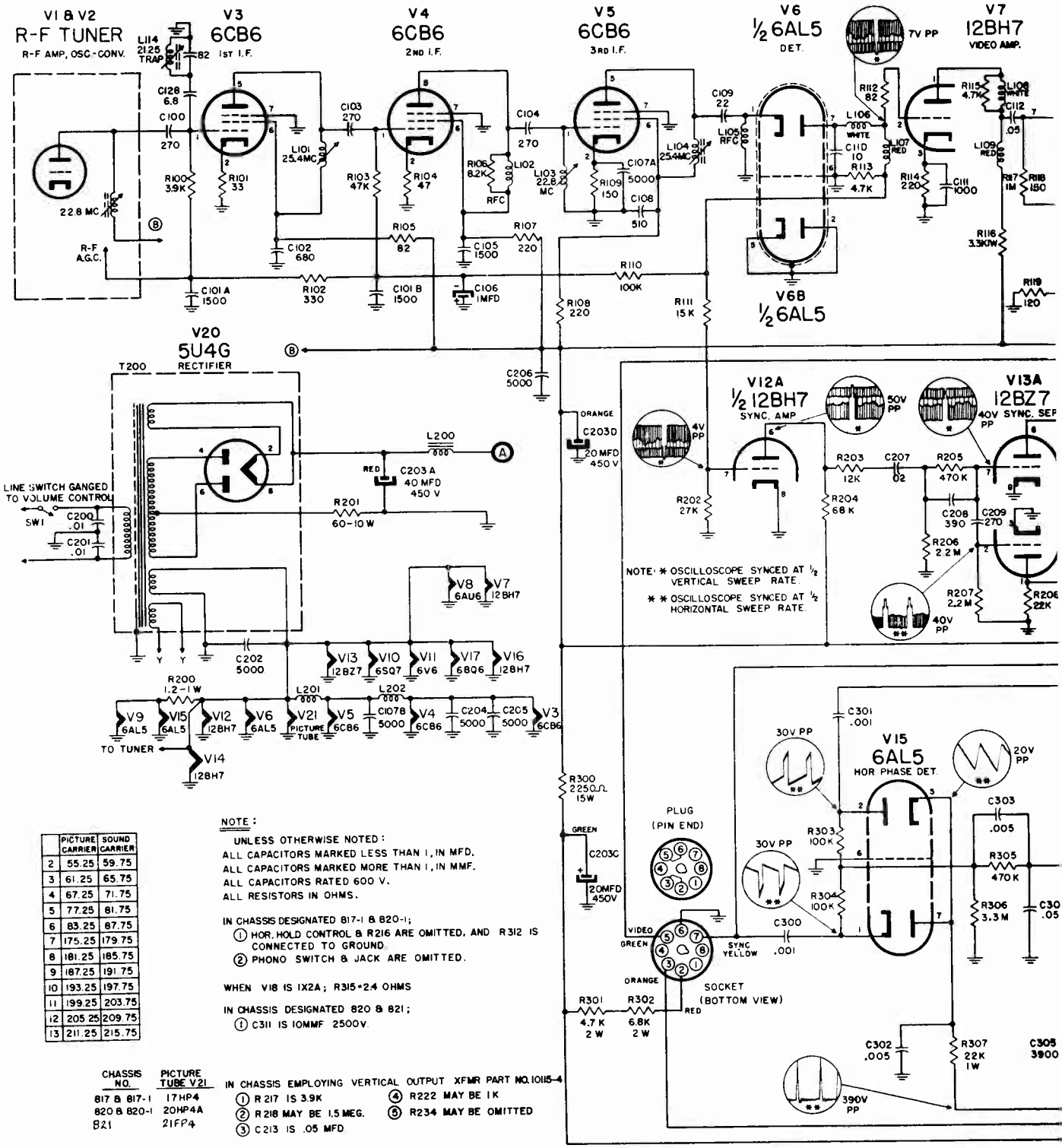

	PICTURE CARRIER	SOUND CARRIER
2	55.25	59.75
3	61.25	65.75
4	67.25	71.75
5	77.25	81.75
6	83.25	87.75
7	175.25	179.75
8	181.25	185.75
9	187.25	191.75
10	193.25	197.75
11	199.25	203.75
12	205.25	209.75
13	211.25	215.75

NOTE:

UNLESS OTHERWISE NOTED:
ALL CAPACITORS MARKED LESS THAN 1, IN MFD.
ALL CAPACITORS MARKED MORE THAN 1, IN MMF.
ALL CAPACITORS RATED 600 V.
ALL RESISTORS IN OHMS.

IN CHASSIS DESIGNATED 817-1 & 820-1;
(1) HOR. HOLD CONTROL & R216 ARE OMITTED, AND R312 IS CONNECTED TO GROUND.
(2) PHONO SWITCH & JACK ARE OMITTED.

WHEN V18 IS 1X2A; R315=2.4 OHMS

IN CHASSIS DESIGNATED 820 & 821;
(1) C311 IS 10MMF 2500V.

CHASSIS NO.	PICTURE TUBE V21
817 & 817-1	17HP4
820 & 820-1	20HP4A
821	21FP4

IN CHASSIS EMPLOYING VERTICAL OUTPUT XFMR PART NO. 10115-4
(1) R217 IS 3.9K
(2) R218 MAY BE 1.5 MEG.
(3) C213 IS .05 MFD
(4) R222 MAY BE 1K
(5) R234 MAY BE OMITTED

I.F. ALIGNMENT PROCEDURE

1 – Connect "high" lead of signal generator to the test point located on the top of the RF tuner unit (Refer to the R-F tuner location diagram located on inside of cabinet). Connect ground to chassis.

2 – Connect DC VTVM lead (through 10K isolating resistor) to 4.7K diode load resistor (R113); ground to chassis. Set VTVM to 5 volt scale, negative polarity.

3 – Set I.F. generator to 25.4 megacycles with sufficient output to read approximately 3 volts on the VTVM.

CBS-COLUMBIA Chassis 817, 820, 821

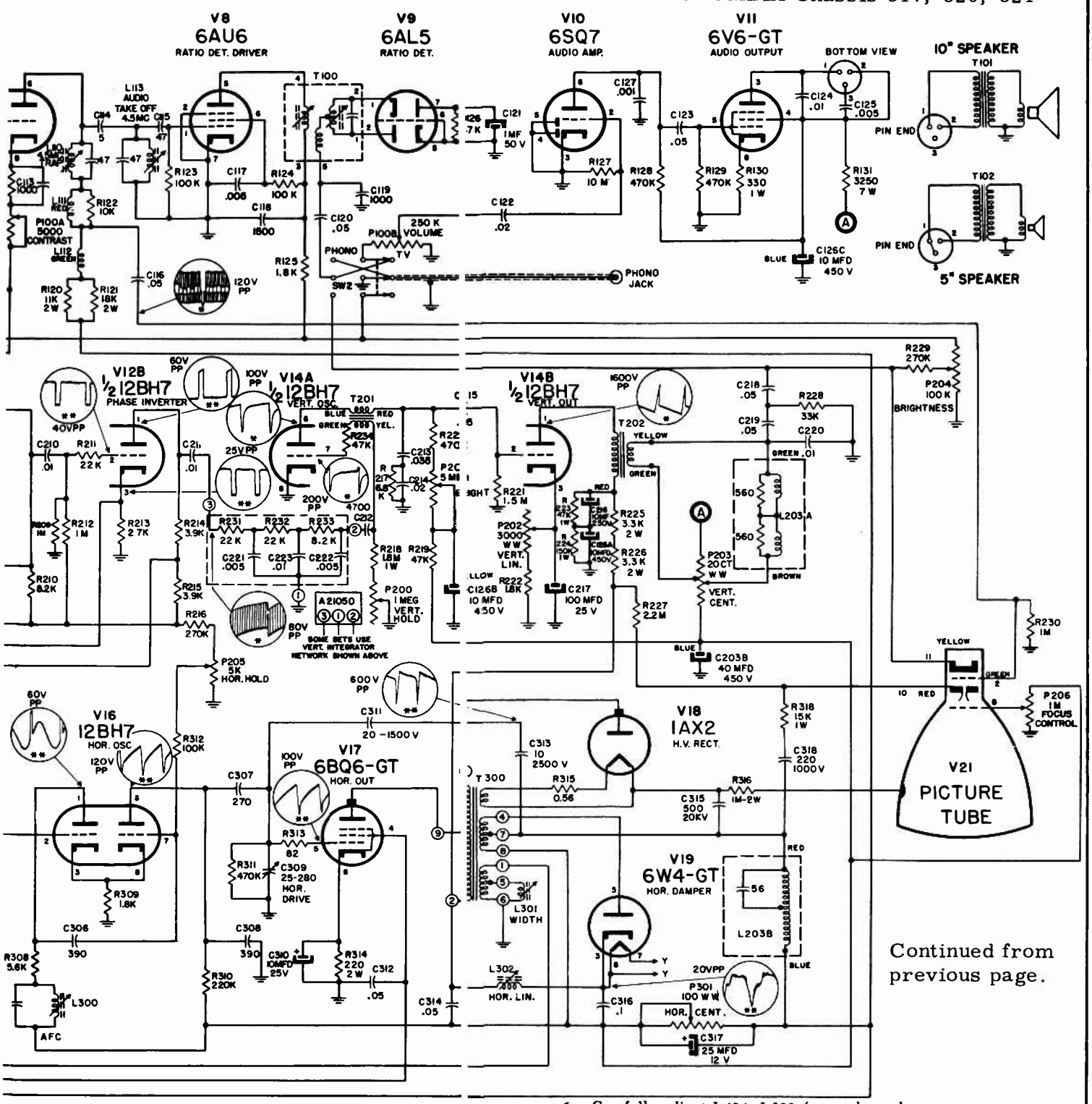

Continued from previous page.

4 – Carefully adjust L101 and L104 (see tube and tuner location) for maximum deflection on VTVM. Adjust sweep generator output to keep meter reading approximately 3 volts.

5 – Set I.F. signal generator to 22.8 megacycles with sufficient output to read approximately 3 volts on the VTVM.

6 – Carefully adjust L404, L103 (see tube and tuner location) for maximum deflection on VTVM. Adjust signal generator output to keep meter reading approximately 3 volts.

7 – Set I.F. signal generator to 21.25 megacycles, set VTVM to 10 volt scale (negative polarity), and adjust signal generator output for convenient deflection on VTVM.

8 – Adjust L114 for minimum deflection on VTVM.

CBS-COLUMBIA Chassis 1021

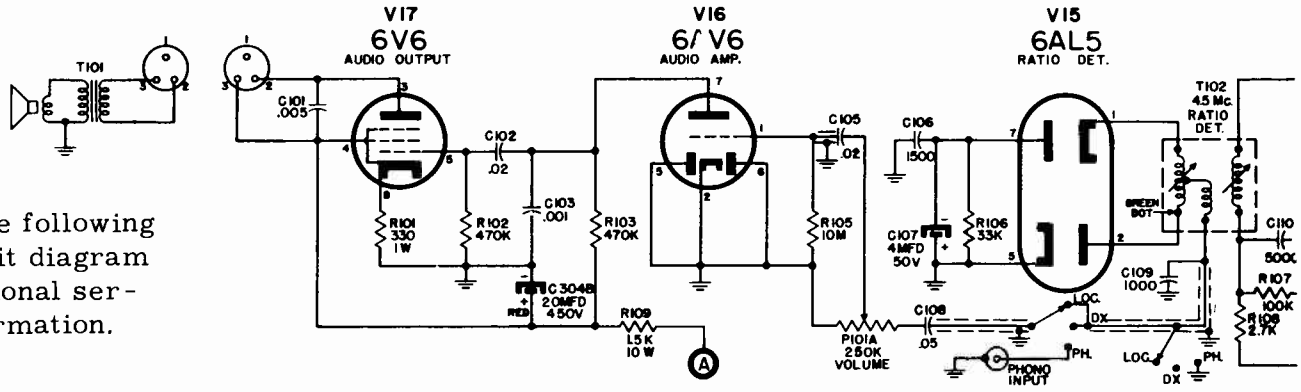

See page following the circuit diagram for additional service information.

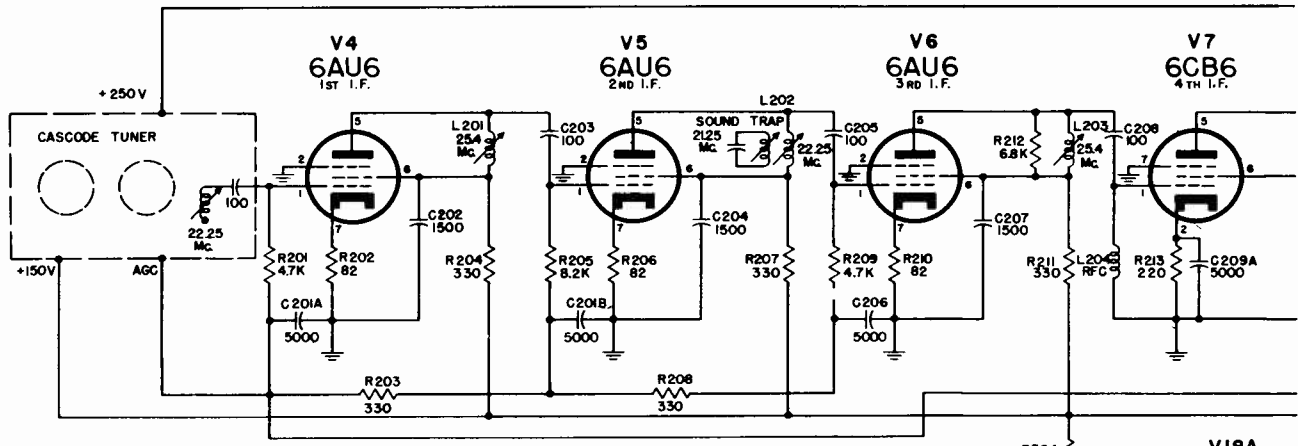

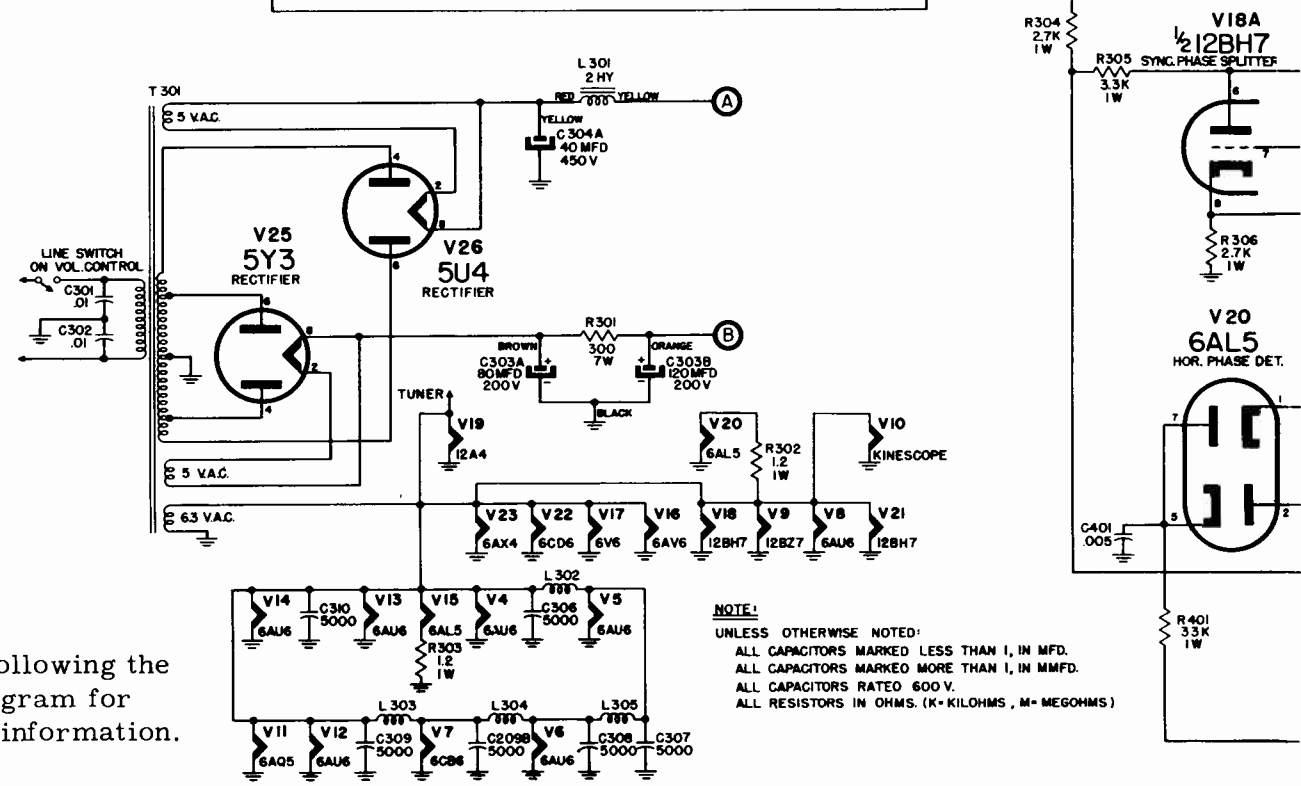

NOTE:
UNLESS OTHERWISE NOTED:
ALL CAPACITORS MARKED LESS THAN 1, IN MFD.
ALL CAPACITORS MARKED MORE THAN 1, IN MMFD.
ALL CAPACITORS RATED 600 V.
ALL RESISTORS IN OHMS. (K=KILOHMS, M=MEGOHMS)

See page following the circuit diagram for additional information.

CBS-COLUMBIA Chassis 1021

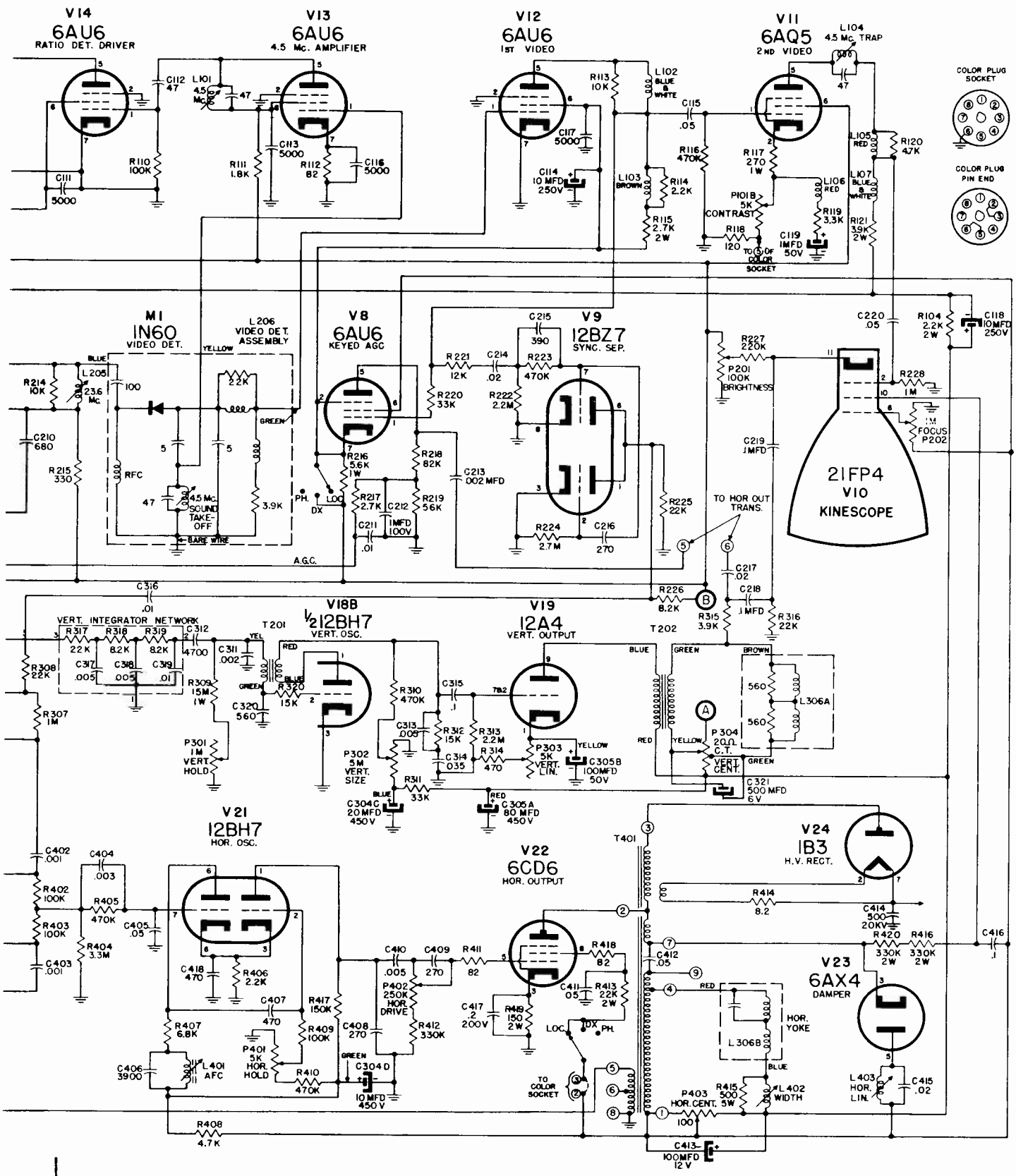

Chassis 1021 is used in Models 21C11, 21C11B, 21C21, 21C31B, 21C41, 21T11.

MOST-OFTEN-NEEDED 1953 TELEVISION SERVICING INFORMATION

CBS-COLUMBIA Chassis 1021. (Circuit diagram on previous two pages).
Models 21C11, 21C11B, 21C21, 21C31B, 21C41, & 21T11.

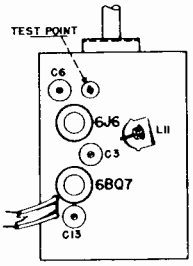

VOLTAGE MEASUREMENTS

TUBE LOC.	TUBE TYPE	PIN NUMBERS 1	2	3	4	5	6	7	8	9	10	11
V1	6BQ7	125	-2	0	6.3 ac	0	225	125	125	0		
V2	6J6	70	140	6.3 ac	0	-2.5	-3.5	0	–	–		
V1	6BZ7	240	140	140	6.3 ac	0	140	-2	0	0		
V2	6J6	120	140	6.3 ac	0	-4	-10	0	–	–		
V4	6AU6	0	0	0	6.3 ac	130	130	1	–	–		
V5	6AU6	0	0	6.3 ac	0	130	130	1	–	–		
V6	6AU6	0	0	6.3 ac	0	130	130	1	–	–		
V7	6CB6	0	2	6.3 ac	0	130	130	0	–	–		
V8	6AU6	60	A 80-120	0	6.3 ac	0	320	A 80-120	–	–		
V9	12BZ7	90	-1.5	0	6.3 ac	6.3 ac	90	1.5	0	0		
V10	21FP4	0	0	–	–	–	B 150V	–	–	–	800	C 80 140
V11	6AQ5	0	D 7-16	0	6.3 ac	150	135	–	–	–		
V12	6AU6	-.5	0	6.3 ac	0	70	70	0	–	–		
V13	6AU6	0	0	0	6.3 ac	110	110	.8	–	–		
V14	6AU6	-1.5	0	6.3 ac	0	125	60	0	–	–		
V15	6AL5	-10	-10	0	6.3 ac	0	0	-25	–	–		
V16	6AV6	E 0-4	0	6.3 ac	0	0	0	E 80-200	–	–		
V17	6V6	320	6.3 ac	240	255	0	–	0	12	–		
V18	12BH7	70	-16	0	6.3 ac	6.3 ac	80	20	22	0		
V19	12A4	12	0	6.3 ac	0	0	–	–	–	340		
V20	6AL5	10	-7	5.6 ac	0	.3	0	.3	–	–		
V21	12BH7	110	-9	15	6.3 ac	6.3 ac	260	2	15	0		
V22	6CD6	100	0	F 15	-40	-40	–	6.3 ac	100	–		
V23	6AX4	–	–	–	–	340	800	6.3 ac	0	–		
V24	1B3 G	14 kv	14 kv	14 kv	14 kv	14 kv	14 kv	14 kv	–	–		
V25	5Y3	340	160	340	190 ac	–	190 ac	340	160	–		
V26	5U4	800	350	–	320 ac	–	320 ac	–	350	–		

ALL VOLTAGES MEASURED WITH VTVM FROM PIN TO GROUND.

LINE VOLTAGE MAINTAINED AT 117 VAC

ANTENNA TERMINALS SHORTED: LOCAL-DX SWITCH IN "LOCAL" POSITION.

A Top number – "Local" position. Bottom number – "DX" position.
B Varies with focus (0 to 300V)
C Varies with brightness (30 to 140V)
D Varies with contrast (7 to 16V)
E Varies with Volume
F Do not measure. High Voltage Pulse
G CAUTION: Use High Voltage Probe.

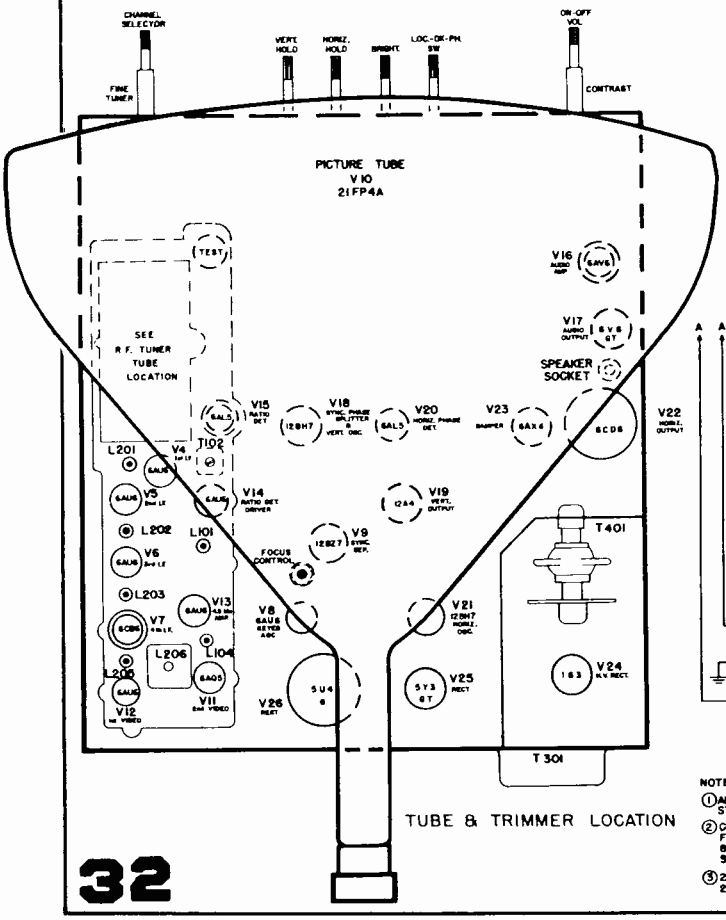

TUBE & TRIMMER LOCATION

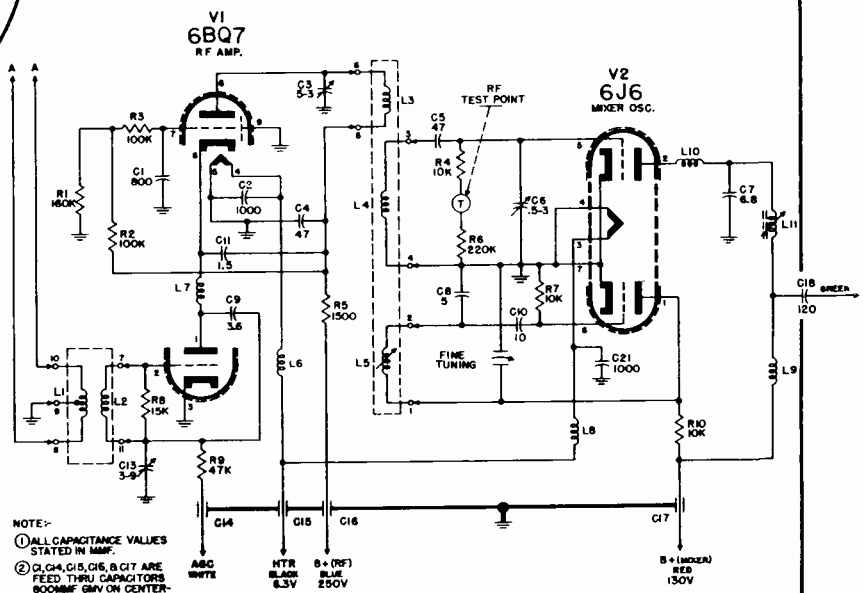

NOTE:-
① ALL CAPACITANCE VALUES STATED IN MMF.
② C1, C14, C15, C16, & C17 ARE FEED THRU CAPACITORS 600MMF GMV ON CENTER-SHIELD ASSY.
③ 25.75 MC VIDEO I.F.; 21.25MC AUDIO I.F.

SCHEMATIC FOR CASCODE TUNER PC-541215

CAPEHART-FARNSWORTH CORPORATION

"CX-37"

SERIES TELEVISION RECEIVER CHASSIS

This servive material is for Capehart Chassis CX-37, versions CT-75, CT-77, and CT-81. Alignment material below is continued on page 36, and the circuit diagram is on pages 34 and 35.

VIDEO I-F ALIGNMENT

Note:

1. Connect the sweep generator output cable (properly terminated in its characteristic impedance) to pin 1 of V201 (grid of 1st I-F Amplifier) through a .001 ufd. isolating capacitor and adjust it to sweep from 40 to 50 MC. If a separate marker generator is used it should be coupled to the same point through a 10K resistor.
2. Remove the AGC Amplifier tube (V401, 6AU6) and connect a bias source from terminal 3 of the R-F, I-F Chassis Power Cable plug to chassis. A bias source may be obtained from a 4.5 volt battery with a 1K pot connected across its terminals. Connect the positive end of the battery to chassis ground and connect the arm of the pot to terminal 3 of the R-F, I-F plug. Connect a VTVM to terminal 3 of the plug and adjust the pot for a minus 3.8 volt reading on the VTVM.
3. Connect the oscilloscope high side to the junction of R219 and pin 7 of V205A through a 10K isolating resistor.
4. Check the response curve for evidence of local oscillator influence by adjusting the fine tuning control If the shape of the curve changes, switch to another channel where oscillator influence is not present or else adjust the Channel Selector so that it is between channels.
5. Adjust the marker generator to provide a marker at 41.25 MC and adjust the top slug of T202 (Co-Channel Sound I-F Trap) for minimum response at the marker frequency. This adjustment may be made easier by running the sweep generator output high so that the trap "dips" are easily visible.
6. Adjust the marker generator to 47.25 MC and adjust the top slugs of T203 and T204 (Adjacent Channel Sound I-F Traps) for minimum response at the marker frequency.
7. Reduce the sweep generator output so that a normal curve is seen. Adjust the marker generator to 42.65 MC and then adjust the bottom slugs of T202 and T204 to obtain maximum amplitude of the 42.65 MC marker.
8. Adjust the marker generator to 45.3 MC and adjust the bottom slugs of T203 and T205 to obtain maximum amplitude of the 45.3 MC marker. To obtain access to the bottom slug of T205 remove the contrast control from the front panel. Use a thin blade alignment tool for the adjustment.
9. Connect the sweep and marker generators to the test point on the R-F Tuner through a .001 ufd., isolating capacitor. Set Channel Selector to Channel No. 9. If the available equipment allows, markers at both 42.25 MC and 45.75 MC should be provided simultaneously.
10. Adjust the overcoupled I-F circuit, T101 (on top of the R-F Tuner) and the slug of L201 to obtain a curve similar to that shown in Figure 5. With certain types of sweep generators this method is not usable due to the spureous response curves obtained on the scope which are caused by the various harmonics of the generator. Under these conditions the overcoupled stage should be aligned as in step 6 of alternate method of I-F alignment. The 42.25 MC marker must fall within 30% to 70% of maximum amplitude of the curve on one side and the 45.75 MC marker must fall within 40% to 60% of maximum on the other side. The valley of the curve should not exceed 10% and the tilt should not be greater than + or −10%. A 45 MC marker should fall within 5% of maximum amplitude on the high frequency side of the curve.

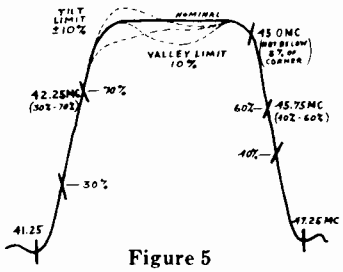

Figure 5

VIDEO I-F ALIGNMENT CHART

Step No.	Set Sweep Generator to:	Set Marker Generator to:	Connect Generator Output Cables to:	Connect Oscilloscope to:	Adjust	Refer to Note/s:
1.		41.25MC	pin 1 of V201 (grid of 1st I-F Stage) through a .001 ufd. capacitor	Junction of R219 and pin 7 of V205A through a 10K resistor	Top slug of T202 for min. response at 41.25MC	1, 2, 3, 4
2.	Sweep from 40 to 50MC	47.25MC			Top slugs of T203 & T204 for min. response at 47.25MC	1, 2, 4, 6
3.		42.65MC			Bottom slugs of T202 & T204 for max. amplitude of marker	1, 2, 4, 7
4.		45.3MC			Bottom slugs of T203 & T205 for max. amplitude of marker	1, 2, 4, 8
5.	Repeat Steps 1 & 2 after completing Steps 3 & 4					
6.		42.25MC 45.0 MC 45.75MC	Test Point on R-F Tuner through a .001 ufd., capacitor		T101 (on top of R-F tuner) and Top slug of L201 for curve shown in Fig. 5	2, 4, 9, 10

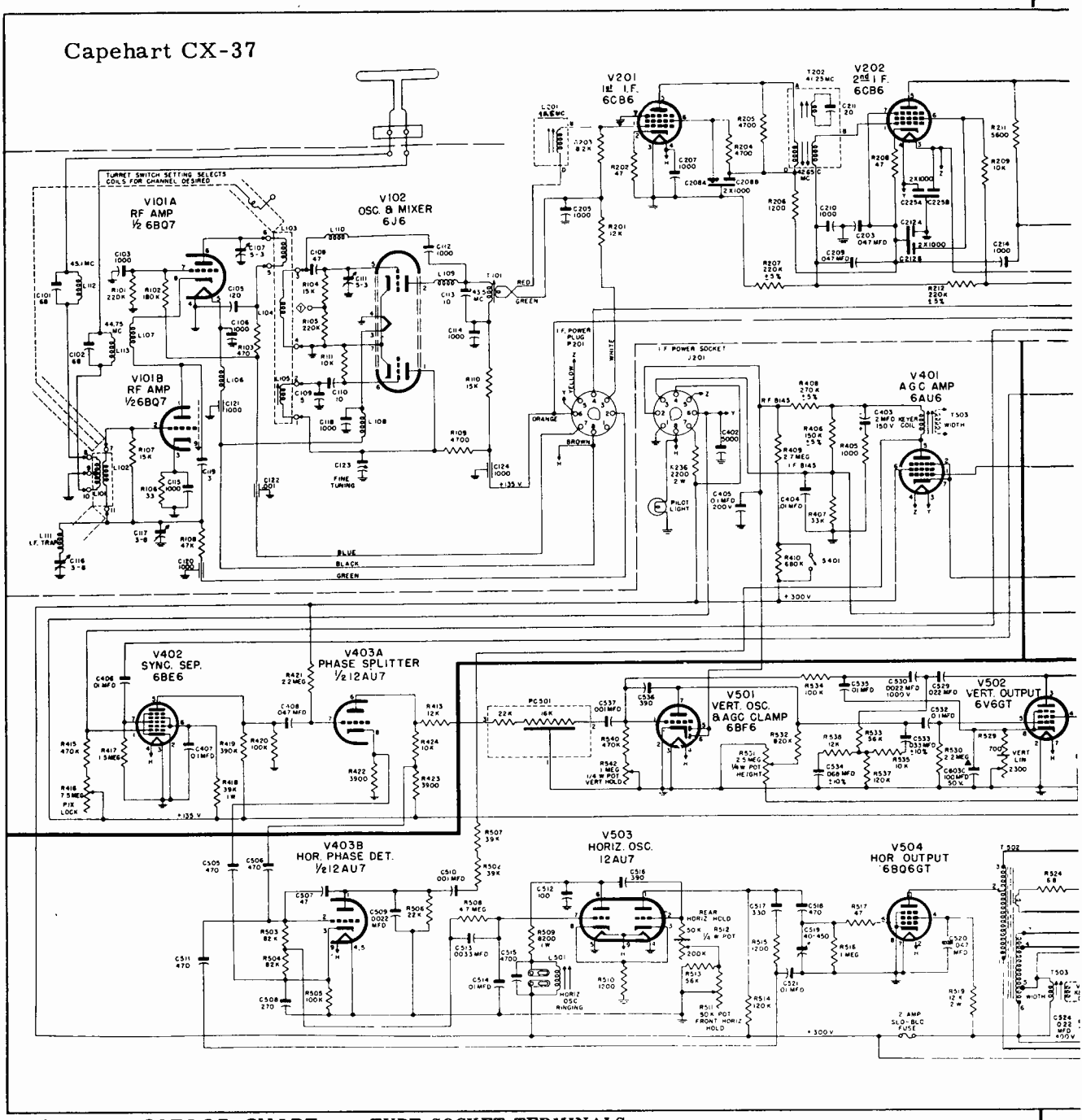

TUBE SOCKET VOLTAGE CHART

TUBE SOCKET TERMINALS

Tube Type & Ref. No.	Pin 1	Pin 2	Pin 3	Pin 4	Pin 5	Pin 6	Pin 7	Pin 8	Pin 9
V101 (6BQ7)	123	−0.3	0.7	0	6.3 A.C.	240	120	123	
V102 (6J6)	94	88	6.3 A.C.	0	−1.8	−6.7	0	—	—
V201 (6CB6)	−1.3 to −1.6	0.5	0	6.3 A.C.	130	115	0	—	—
V202 (6CB6)	140	140	6.3 A.C. (135 D.C.)	0 A.C. (135 D.C.)	290	275	140	—	—
V203 (6CB6)	130	135	6.3 A.C. (135 D.C.)	0 A.C. (135 D.C.)	275	250	130	—	—
V204 6CB6)	130	135	6.3 A.C. (135 D.C.)	0 A.C. (135 D.C.)	280	280	130	—	—
V205 (6X8)	0	−1.2	30	6.3 A.C.	0	0.7	−1.2	130	90
V206 (6AQ5)	1 to 9	10 to 18	0	6.3 A.C.	221 to 242	130	N.C.	—	—

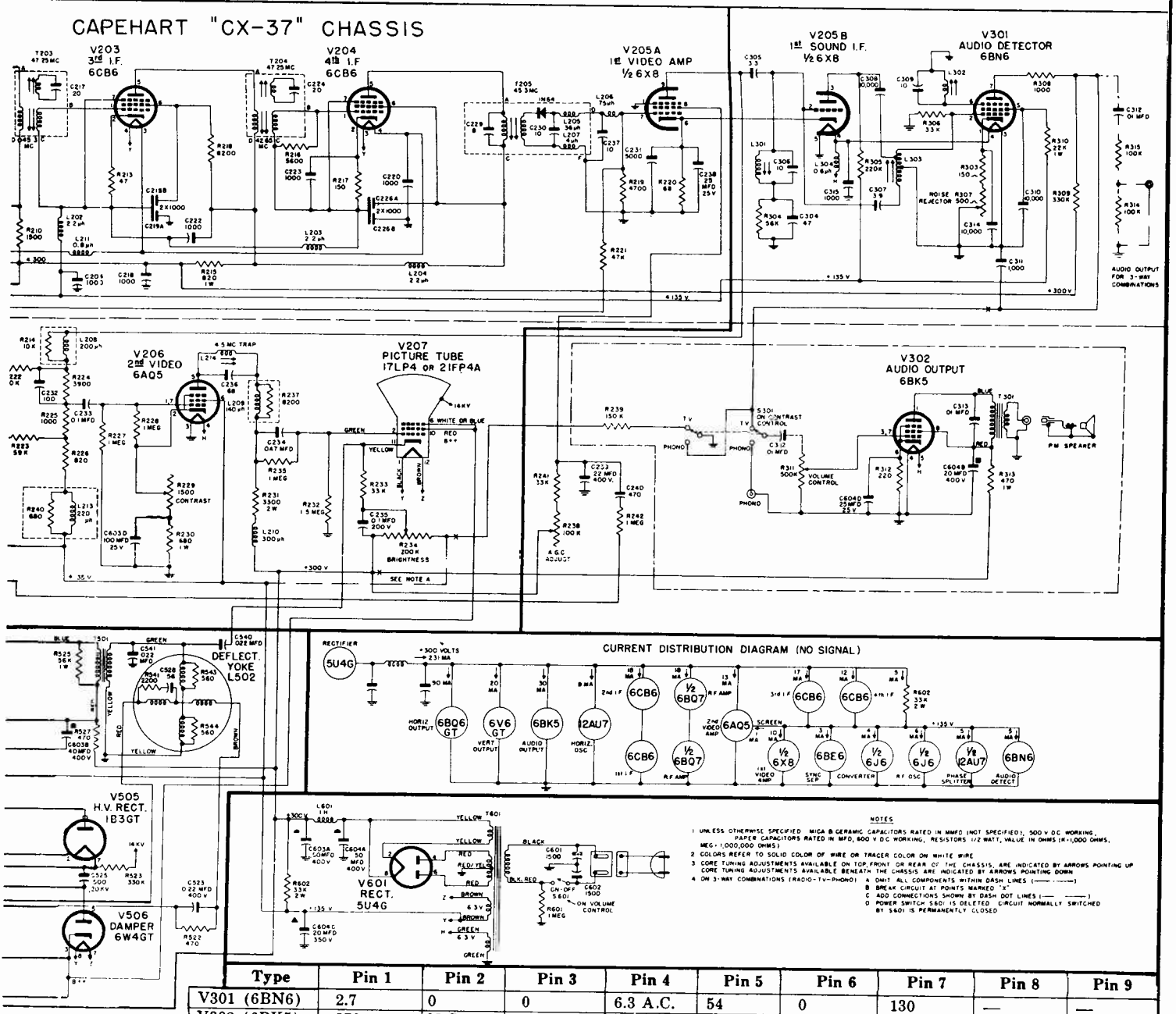

Type	Pin 1	Pin 2	Pin 3	Pin 4	Pin 5	Pin 6	Pin 7	Pin 8	Pin 9
V301 (6BN6)	2.7	0	0	6.3 A.C.	54	0	130	—	—
V302 (6BK5)	270	N.C.	0	0	6.3 A.C.	6.8	N.C.	280	N.C.
V401 (6AU6)	125	—	0 A.C. (135 D.C.)	6.3 A.C. (135 D.C.)	130	300	130	—	—
V402 (6BE6)	0	0	0	6. 3 A.C.	24	17	−18	—	—
V403 (12AU7)	−.4	−3.2	2.3	0	0	70	22	22	6.3 A.C.
V501 (6BF6)	−.6 to −12	0	0	6.3 A.C.	0.3	0.3	−.5 to 100	—	—
V502 (6V6)	N.C.	0	280	295	0	295	6.3 A.C.	26	—
V503 (12AU7)	150	−6.4 to −20	9	0	0	250	−.4	9	6.3 A.C.
V504 (6BQ6)	N.C.	6.3 AC	N.C.	149 to 162	−37	8 to 10	0	0	(cap) 452 to 541
V506 (6W4)	N.C.	N.C.	550	N.C.	285	N.C.	6.3 A.C. (135 D.C.)	0 A.C. (135 D.C.)	—
V601 (5U4)	N.C.	320 D.C. (5 A.C.)	N.C.	320 A.C.	N.C.	320 A. C.	N.C.	320 D.C. (5 A.C.)	—

All voltages measured with no signal input on a vacuum tube voltmeter from tube socket pin to chassis unless otherwise indicated. All voltages should be with ± 20% of the above stated values with line voltage of 117 volts, 60 cycle AC. Voltages on V206 vary with setting of Contrast. Voltages on V401 vary with setting of AGC Set. Voltages on V501 and V502 vary with settings of Vert. Hold, Vert. Lin. and Height. Voltages on V207 vary with setting of shading.

Capehart-Farnsworth Chassis CX-37, Alignment continued.

4.5 MC. SOUND I-F ALIGNMENT

Note:

1. Connect generator output cables to junction of L206 and R219 (pin 2 of V205A).
2. Connect vertical input leads of oscilloscope to detector network shown in fig. 7. Clip the alligator clip of the detector input over the insulated wire between pin 2 of the 6BN6 and L303 so that there is no direct electrical connection between the input to the detector network and the circuit under test. The ground connection of the detector circuit, however, should be connected to the chassis.
3. Short pin 1 to pin 2 of tube V202.
4. Inject 4.5 Mc. Signal with 50% AM modulation and adjust L301 for maximum. Use full vertical amplifier oscilloscope gain so that the signal level from the generator is kept as low as possible.
5. Adjust L303 for maximum indication and then recheck the adjustment of L301.
6. Remove crystal detector network and connect the oscilloscope directly to the junction of R308 and R309.
7. Inject 4.5 Mc. FM signal with 25 kc. deviation and using full generator output to insure limiting in the 6BN6, adjust L302 (quadrature coil — accessible through bottom hole in back of Shading Control) for maximum output.
8. Remove short from V202 and connect receiver to antenna through a signal attenuator (Centralab PCH-4, IRC QJ-3 or Equivalent). Adjust set for reception of a local TV signal. By attenuating the incoming signal so that background noise is just noticeable at all times a more exact setting can be obtained. Adjust Noise Rejection Control (R307 — accessible through top hole in back of Shading Control) for minimum background noise and hiss.
9. Remove attenuator and with full signal adjust L302 for clearest sound.

4.5 MC. SOUND I-F ALIGNMENT CHART

Step No.	Set Generator to:	Connect Generator Output Cable to:	Connect Scope Vertical Input Cable to:	Adjust	To Obtain	Refer to: Note/s
1.	4.5 Mc. 50% AM Modulation		Pin 2, V301 through detector network fig. 7	L301 and L303	Maximum Indication	1, 2, 4, 5
2.	4.5 Mc. FM 25 kc Deviation (maximum signal output)	Junction L206, R219	Junction R308 and R309	L302	Maximum Indication	7
3.	Remove short on V202 and connect set to antenna. Tune in station and attenuate signal so that background hiss is apparent.			R307	Minimum background Hiss and Noise	8
4.	Set connected to antenna with full signal input.			L302	Clearest Sound	

4.5MC. TRAP L214 ADJUSTMENT CHART

Step No.	Set Marker Generator To:	Connect Generator Output Cables To:	Connect Oscilloscope Vertical Input Cable to:	Adjust:
1.	4.5 MC A.M. Modulation	Junction of L205 & R219 Ground side to chassis	Junction of C234, R235, R232 thru detector network Fig. 7	L214 slug for minimum amplitude of modulation.

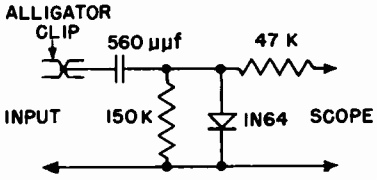

Figure 7

Adjustment of the AGC control (R238) should only be made with the aid of a calibrated oscilloscope. Connect the vertical input of the scope to pin 1 of the 2nd Video Amplifier (V206). With the set connected to an antenna and adjusted for normal reception adjust the AGC control (on top of chassis between power transformer and high voltage cage) for an indication of 12 volts peak-to-peak.

The AGC control is properly adjusted at the factory and the setting is marked with colored cement across the shaft and bushing of the control. If the control should become misadjusted and a calibrated oscilloscope is not available, the control can be set approximately by resetting to its original position, as indicated by the cement.

Adjustment of the Quadrature Coil (L302) and Noise Rejection Control (R307) should be made at the time the instrument is installed to insure the best sound reproduction. Access to these adjustments have been provided from the front of the instrument. With a station properly tuned in remove the Volume and Shading Knobs.

Adjustment of the Quadrature Coil can be made by inserting an alignment tool through the bottom hole that is located behind the Volume and Shading Knobs. Adjustment of this control should be made for the strongest and clearest sound.

The Noise Rejection Control can best be set with the signal attenuated until background noise is apparent in the sound. With the signal attenuated adjust the control for minimum background hiss and noise. This control is located behind the top hole that is exposed by removing the Volume and Shading Knobs.

Early production chassis may vary from the schematic shown in the following ways:

C209, C239, C240, C241 were not used.
R225, R242, R306 were not used.
R315 was 470K instead of 100K.
R226 was 1800 instead of 820.
R238 was 250K instead of 100K and was connected between pin No. 1 and pin No. 7 with a 4.7K in series. C526 (.047 mfd 400V) was connected from junction of C524-R519 to +300V and H. V. fuse was .15 amp.
C525 was grounded instead of connected to pin No. 8 of V502.

CROSLEY

CHASSIS 385
Models: EU-17COL
EU-17COLB
EU-17TOLa
EU-17TOLB

CHASSIS 386
Models: EU-21COLd
EU-21COLBd
EU-21TOL
EU-21TOLB

CHASSIS 387
Models: EU-21COLe
EU-21COLBe

CHASSIS 396
is similar.
Models: EU-17COLU
EU-17COLBU
EU-17TOLU
EU-17TOLBU

I. F. ALIGNMENT

1. To Check I. F. Alignment on Oscilloscope:

(a) Lift the shield of the Oscillator - Mixer tube V2 sufficiently to clear the socked ground clips. Connect sweep signal generator "hot" lead to the undergrounded tube shield and generator ground lead to the tuner chassis.

(b) Connect high side of oscilloscope to high side of contrast control (pin 2 and 7 of V108), and the low side to chassis.

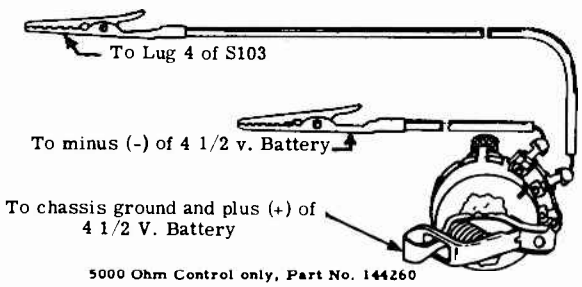

VARIABLE BIAS CONTROL ASSEMBLY

(c) Apply - 3.0 volts D.C. bias to lug 4 of S103 (See sketch "Variable Bias Control"). Contrast control should be set in the maximum counter-clockwise position.

(d) With the generator sweep set at zero, connect an electronic voltmeter between lug 2 of S103 and chassis. Adjust the output of the generator to obtain a reading of 2 volts D.C. on the meter.

(e) Set generator to sweep from 20 mc. to 30 mc.

(f) Connect marker generator to sweep generator output leads and adjust to provide markers that appear in the curve.

(g) Observe curve and position of markers (see nominal response curve). Slight deviation in shape from the nominal response curve is permissible, but if any great deviation is noted, it will be necessary to realign the I-F Amplifier.

2. Alignment, I. F. & Tuner Assembly (with electronic voltmeter):

(a) Connect - 3.0 Volts D.C. bias supply to lug 4 of S103.

(b) Connect signal generator "hot" lead through a 1000 mmf. capacitor to TP-1 (wire protruding from tuner directly adjacent to the oscillator mixer tube V2) and ground lead to the R. F. tuner case.

(c) Connect high side of Electronic Voltmeter to lug 2 of S103 and low side to chassis.

(d) Set signal generator to 25.0 mc. and adjust bottom of T103 for maximum meter deflection, limiting meter deflection to 2 volts D.C. by adjusting input attenuator.

(e) Set signal generator to 23.3 mc. and adjust bottom of T102 for maximum D.C. meter indication. Adjust signal generator amplitude to make this peak indication approximately 2 volts D.C.

(f) Reset signal generator to 21.9 mc. and adjust the top of T102 for minimum D.C. meter deflection. Signal generator amplitude must be sufficiently high

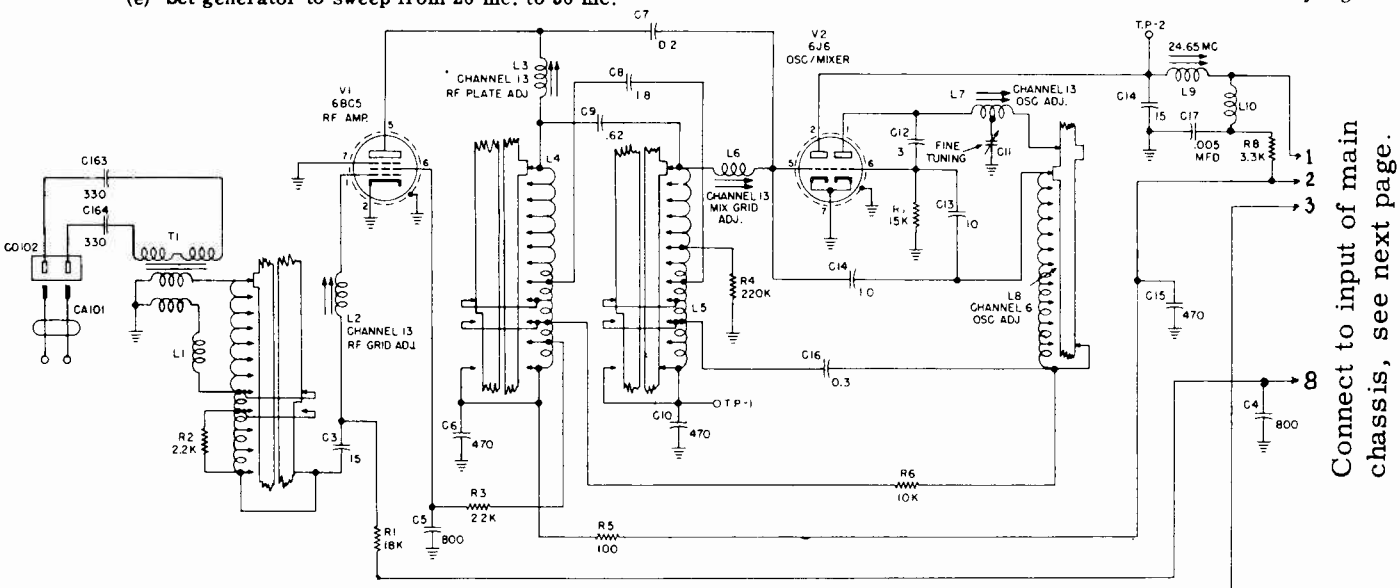

Circuit of tuner, connects to main chassis diagram on the next page. Alignment information continued on page after diagram.

CROSLEY

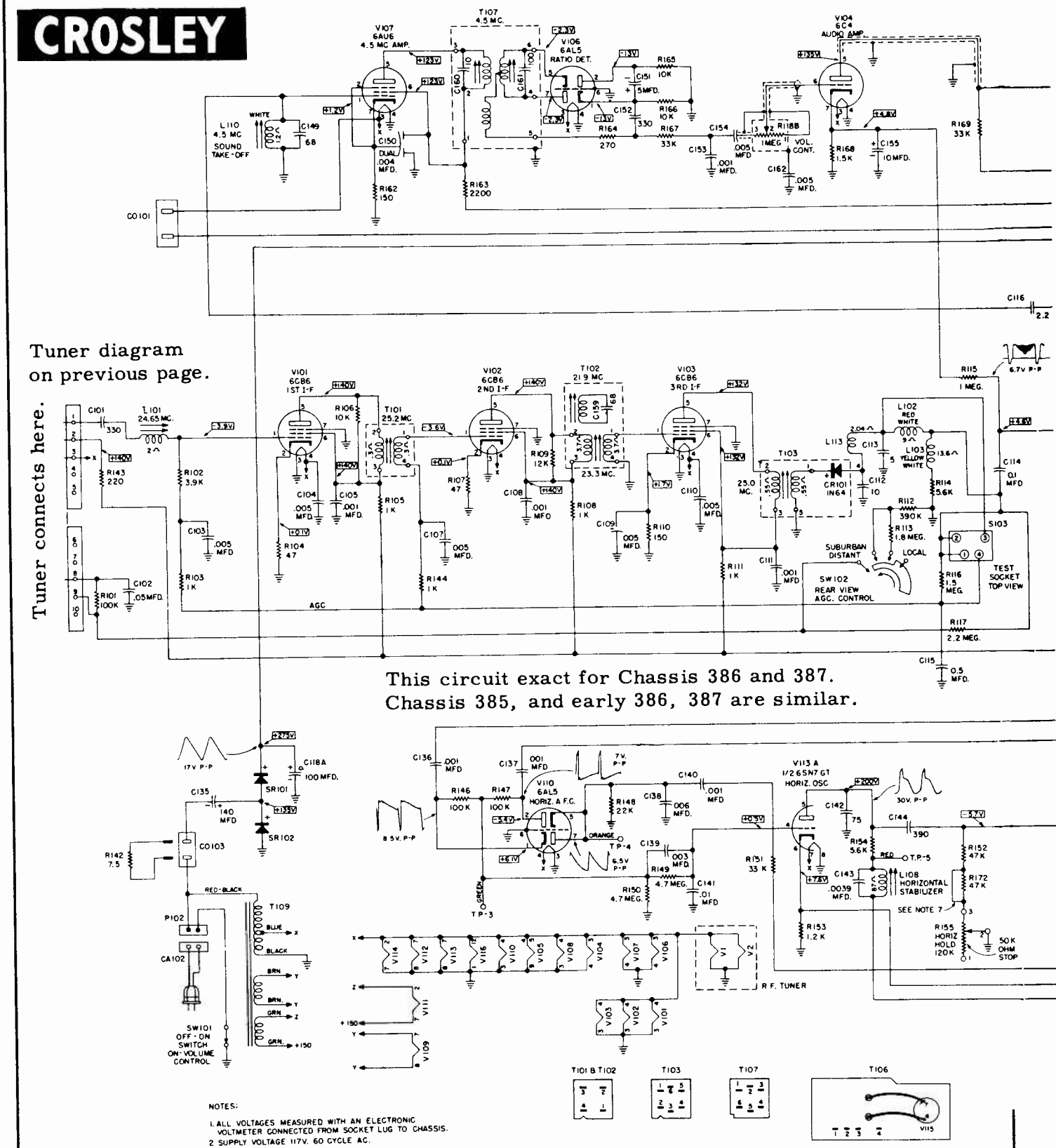

NOTES:

1. ALL VOLTAGES MEASURED WITH AN ELECTRONIC VOLTMETER CONNECTED FROM SOCKET LUG TO CHASSIS.
2. SUPPLY VOLTAGE 117V. 60 CYCLE AC.
3. K=1000
4. ALL CAPACITANCE VALUES IN MMF. AND ALL RESISTANCE VALUES IN OHMS UNLESS OTHERWISE NOTED.
5. TERMINAL 8 TIED TO TERMINAL 1 ON INSIDE OF YOKE.
6. CAPACITOR USED ON 386 CHASSIS ONLY.
7. JUMPER MAY BE CONNECTED OR OPEN DEPENDING ON REQUIREMENTS FOR OSCILLATOR ALIGNMENT.

EARLY PRODUCTION SETS USED 680 MMF. FOR C145 AND 4.7 K OHM FOR R157. TO INCREASE THE HORIZONTAL DRIVE IN LATER PRODUCTION SETS, C145 IS 560 MMF. AND R157 IS 5.6 K OHM. IF EITHER COMPONENT REQUIRES REPLACING, REPLACE BOTH COMPONENTS WITH VALUES AS SHOWN IN THE SCHEMATIC.

Crosley Chassis 385, 386, 387.

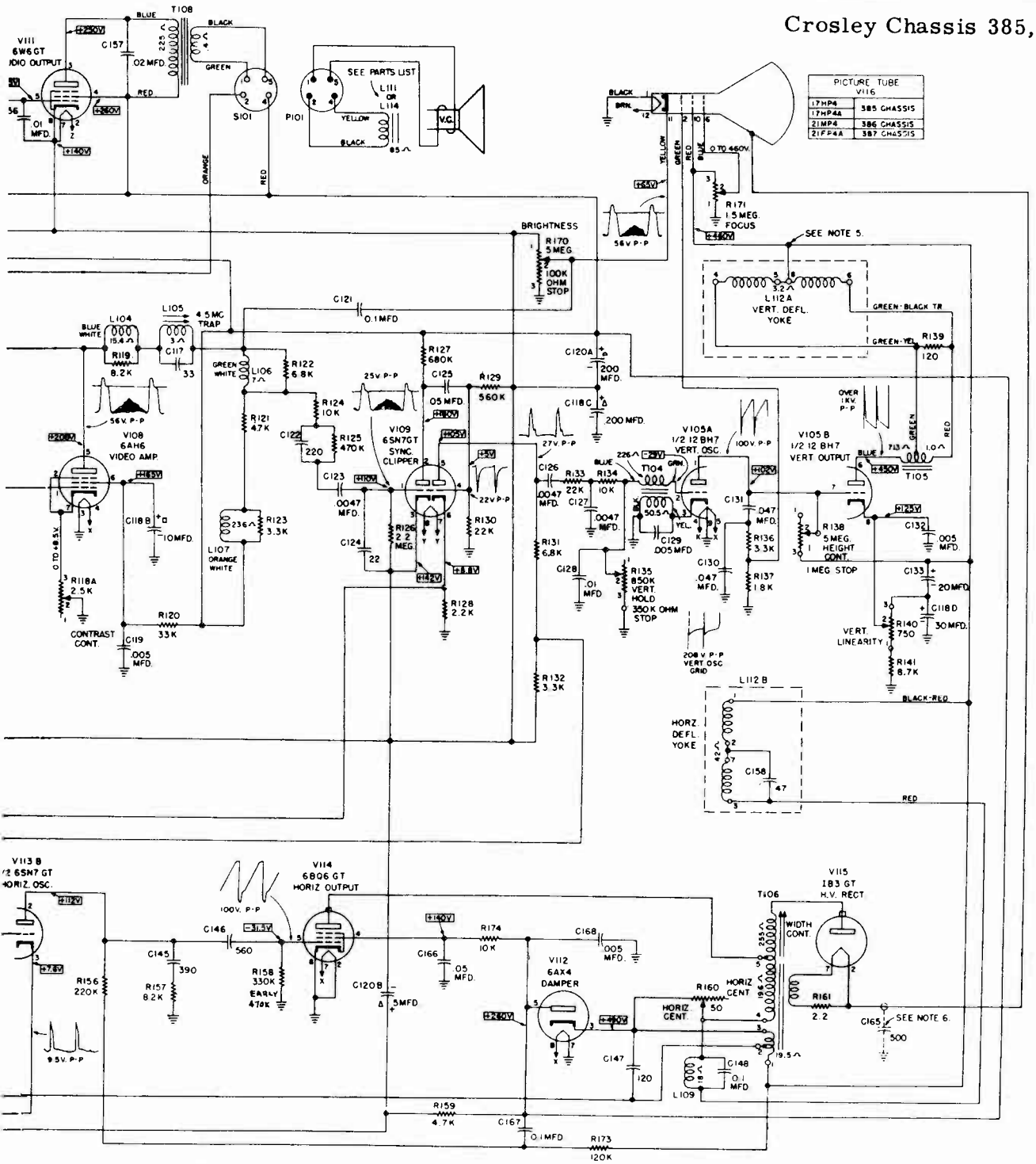

HORIZONTAL HOLD ADJUSTMENT

1. Tune in a local television signal and adjust contrast control for normal picture.
2. Connect electronic voltmeter between TP-3 (green lead) and chassis.
3. Short TP-4 (orange lead) to chassis and adjust electronic voltmeter to zero.
4. Remove short from TP-4. Do not change zero on electronic voltmeter.
5. Connect a 0.1 mfd. plus 20%, 600 volt capacitor between TP-5 (red lead) and chassis.
6. Adjust Horizontal Hold control for zero reading on the meter.
7. Remove the 0.1 mfd. capacitor from TP-5 and chassis. Do not disturb setting of horizontal hold control.
8. Adjust Horizontal Stabilizer coil (L108) for zero reading on the meter.
9. Remove electronic voltmeter from TP-3
10. Check horizontal pull-in range. The pull-in range should be approximately 50° of the controls rotation.

Crosley Chassis 385, 386, 387, Alignment continued.

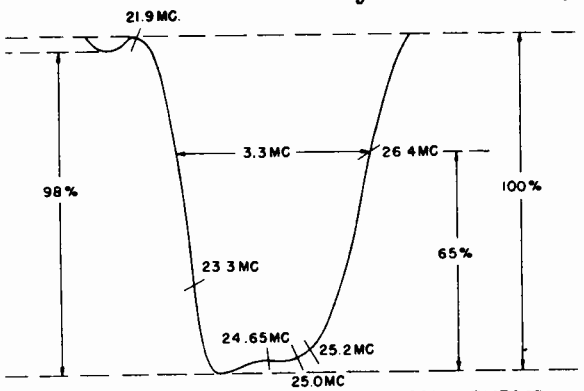

NOMINAL OVERALL I. F. RESPONSE CURVE
NOTE: Response as Seen by Means of Sweep Generator

I. F. ALIGNMENT (Continued)

to produce a definite null. Meter must read at least 0.5 volts at null.

(g) Repeat steps 5 and 6.

(h) Next set signal generator to 25.2 mc. and adjust bottom of T101 for maximum meter indication, limiting output of generator so peak reading will not exceed 2 volts D.C.

(i) Reset signal generator to 24.65 mc. Connect a 500 ohm resistor in series with a 500 mmf. capacitor from TP-2 (wire protruding from the tuner through the insulated eyelet between the brass adjusting screws) on the R-F Tuner to the Tuner side of C101. Adjust L101 for maximum meter deflection, but limit output of generator so this reading does not exceed 2 volts D.C. Remove the 500 ohm resistor and the 500 mmf. capacitor.

(j) Set signal generator to 24.65 mc. Connect the 500 ohm resistor and the 500 mmf. series capacitor across L101 and adjust mixer output (L9) on R-F Tuner for maximum meter indication. Adjusting amplitude of signal generator to make this maximum indication approximately 2 volts D.C. Remove the 500 ohm resistor and the 500 mmf. capacitor.

(k) Check sensitivity. The input for 2 volts D.C. output and zero bias should not exceed 150 microvolts at 24.65 mc. with a generator internal resistance of 1.5 ohms or less, and the local oscillator set to properly tune in channel 5.

SOUND ALIGNMENT

1. Connect crystal controlled 4.5 mc. 400 cycle amplitude modulated signal, modulated 30% or greater, to lug 2 of S103 and chassis.
2. Connect high side of scope through detector probe to the picture tube cathode (pin 11). Connect low side of scope to chassis. Adjust 4.5 mc. trap, L105 for minimum 400 cycle deflection on scope.
3. Connect electronic voltmeter to lug 2 of ratio detector, V106, and adjust 4.5 mc. sound take-off (L110) and bottom of ratio transformer (T107) for peak reading on voltmeter. Adjust input to make this peak reading 4 volts.
4. Adjust input to obtain 12 volts output. Transfer electronic voltmeter to junction of R167 and C153 (refer to Schematic Wiring Diagram). Adjust top of T107 for zero balance on electronic voltmeter.
5. Recheck steps 2, 3 and 4 above.

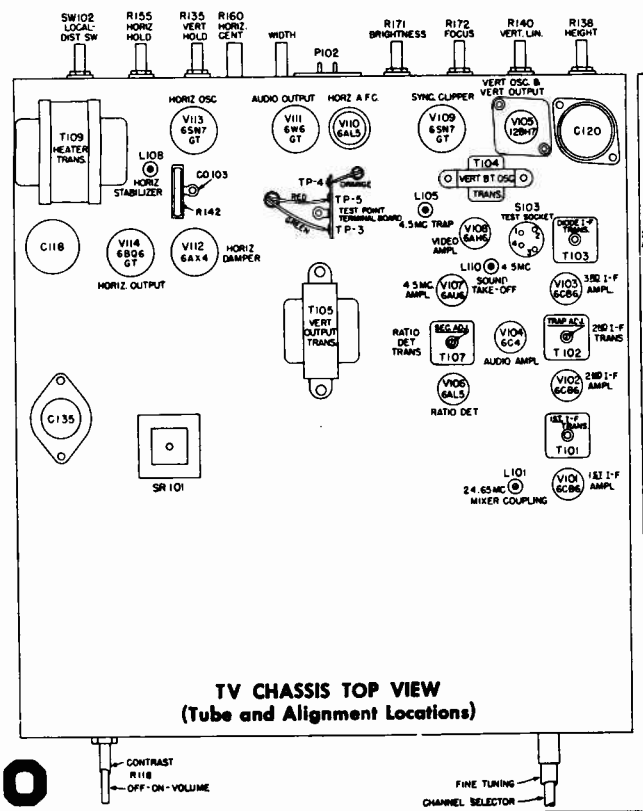

TV CHASSIS TOP VIEW
(Tube and Alignment Locations)

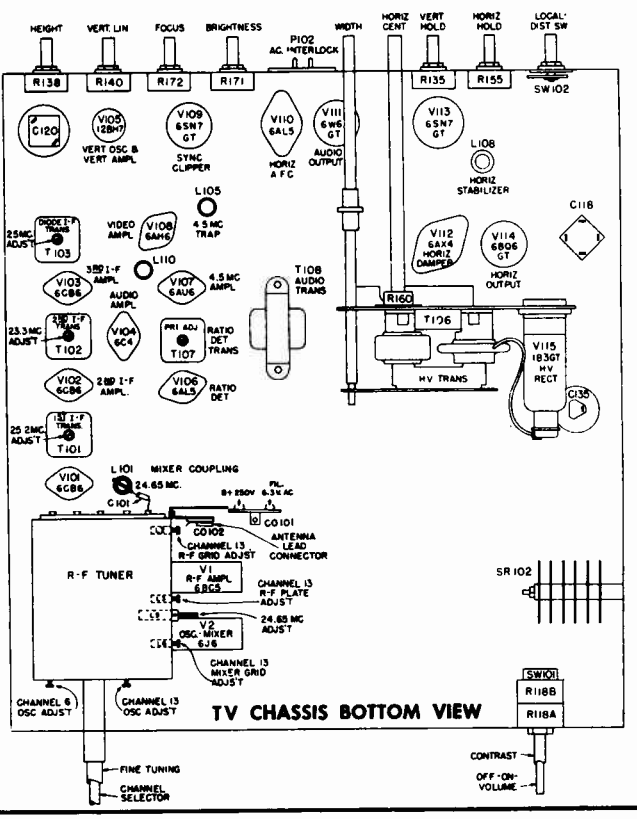

TV CHASSIS BOTTOM VIEW

CONTRAST R118 OFF-ON-VOLUME
FINE TUNING
CHANNEL SELECTOR
FINE TUNING
CHANNEL SELECTOR
CONTRAST
OFF-ON-VOLUME

ALLEN B. DU MONT LABORATORIES, INC.

RA-166/167, 170/171 CHASSIS

MODELS

Model	Name	Chassis	CRT	Services	Cabinet
17T350	Chatham	RA-166	17 inch rect.	VHF	Table Model. Mah. and Bl.
21T327	Ridgewood "41"	RA-167	21 inch rect.	VHF	Console W/doors. Mah. and Bl.
21T328	Wakefield "41"	RA-167	21 inch rect.	VHF	Console W/doors. Mah. and Bl.
21T329	Essex	RA-167	21 inch rect.	VHF	Console W/doors. Mah.
21T359	Oxford	RA-167	21 inch rect.	VHF	Table Model. Mah. and Bl.
21T366	Lynwood	RA-167	21 inch rect.	VHF	Console. Mah. and Bl.
21T376	Somerset II	RA-170	21 inch rect.	VHF, Phono provisions	Console W/doors. Mah. and Bl.
21T377	Newbury II	RA-170	21 inch rect.	VHF, Phono provisions	Console W/doors. Mah. and Bl.
21T378	Hanover II	RA-170	21 inch rect.	VHF, Phono provisions	Console W/doors. Mah. and Bl.
21T376U	Somerset II	RA-171	21 inch rect.	UHF-VHF, Phono provisions	Console W/doors. Mah. and Bl.
21T377U	Newbury II	RA-171	21 inch rect.	UHF-VHF, Phono provisions	Console W/doors. Mah. and Bl.
21T378U	Hanover II	RA-171	21 inch rect.	UHF-VHF, Phono provisions	Console W/doors. Mah. and Bl.

DEFLECTION YOKE ADJUSTMENT. — If the picture is tilted, squeeze the ends of the yoke spring clip (A in Figure 18) together and lift them off the CRT support ring. Rotate the yoke until the picture is horizontal. The deflection yoke retainer (B in Figure 18) may rotate with the yoke. If this occurs the retainer should be held in position while the yoke is rotated, making sure that the yoke end cover rotates with the yoke. When the deflection yoke has been properly adjusted, reset the spring clip to hold the yoke in position.

POSITIONING ADJUSTMENT. — If the picture is not properly positioned, readjust the positioning magnet using the following procedure:

1. Push the positioning magnet assembly forward until it touches the rear of the yoke retainer.
2. Bring the protruding adjustment tabs (C in Figure 18) together.
3. Rotate the entire positioning magnet assembly around the neck of the tube until the picture is properly positioned.
4. If the picture cannot be properly positioned in this manner, separate the tabs slightly and rotate the entire assembly around the tube again. Continue to repeat this step, increasing the separation of the tabs each time, until the picture is properly positioned.

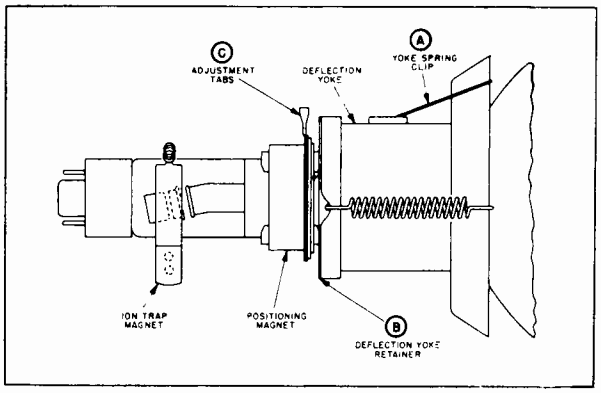

Figure 18.

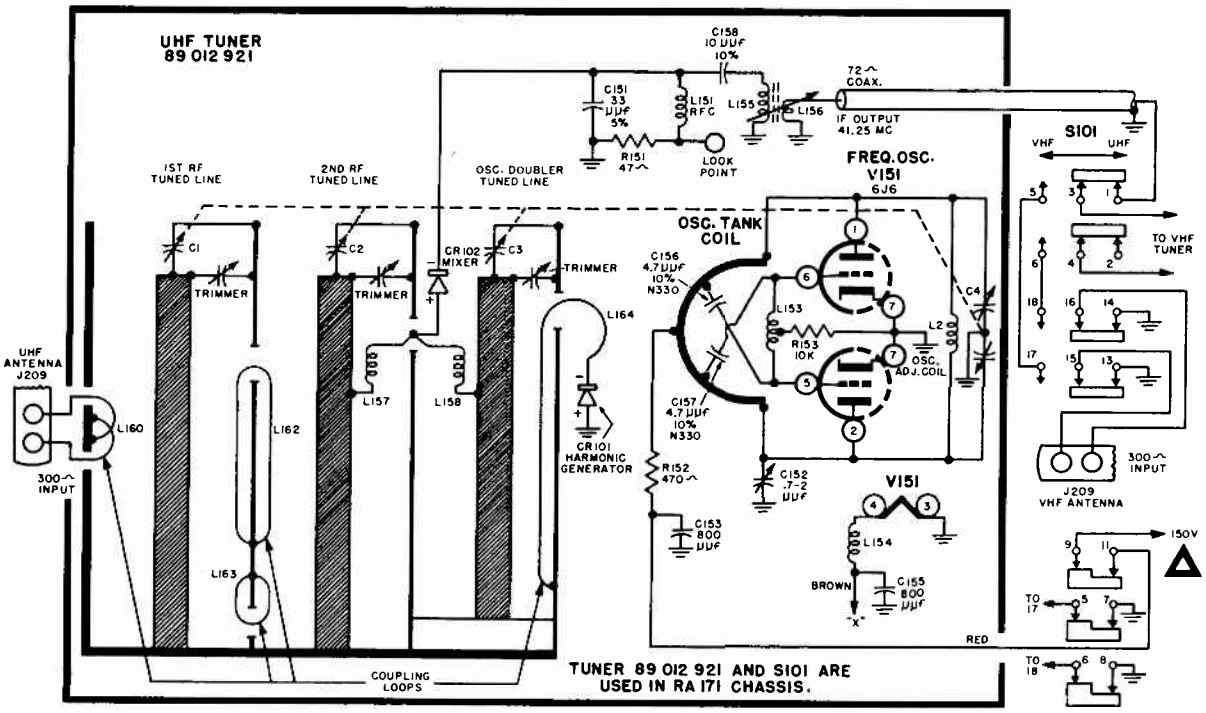

Schematic diagram of the UHF tuner.

Main circuit diagram on pages 42 and 43, Other service material on pages 44 to 46.

Du Mont Chassis
RA-166/167, 170/171

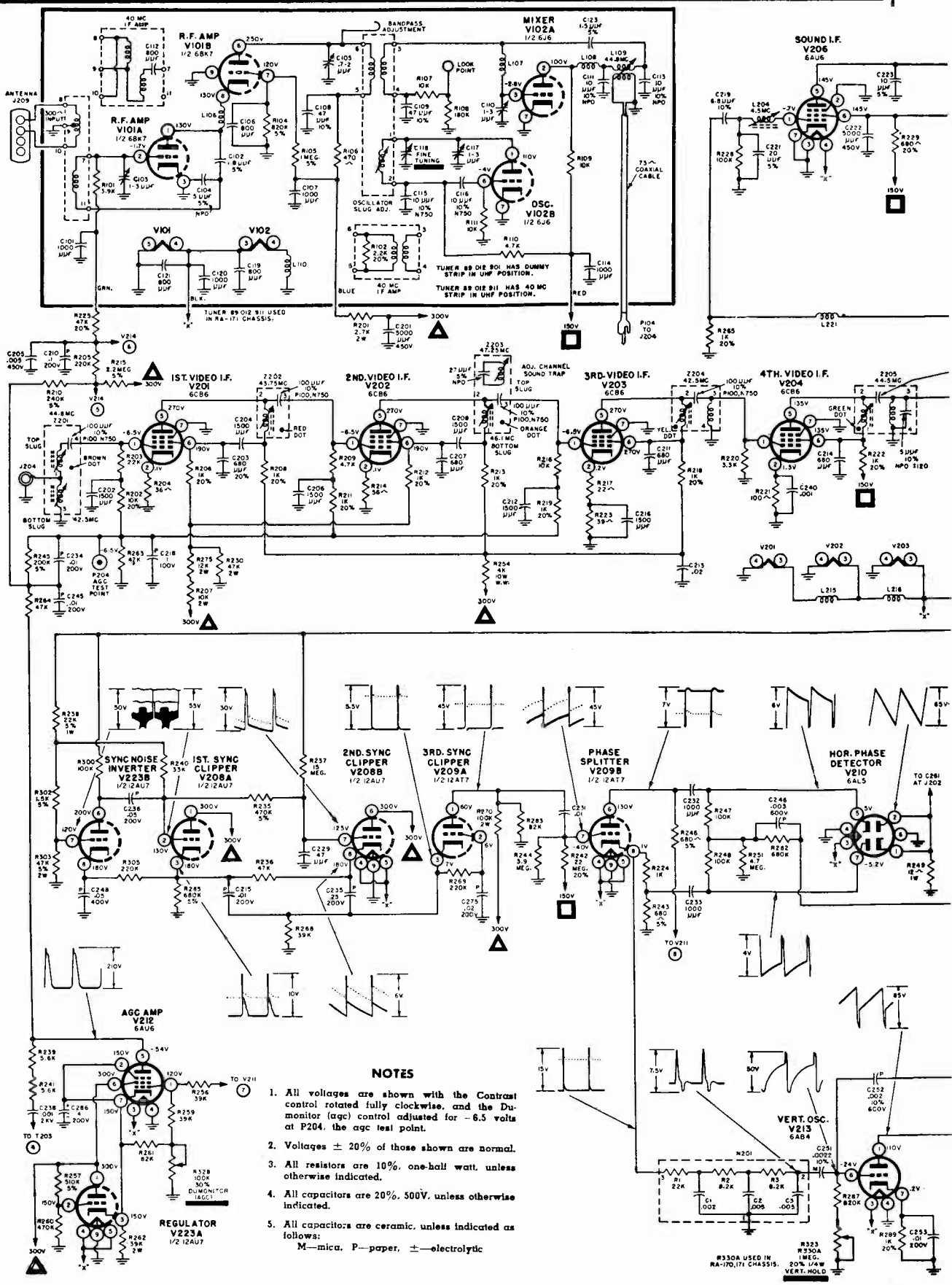

NOTES

1. All voltages are shown with the Contrast control rotated fully clockwise, and the Du-monitor (agc) control adjusted for −6.5 volts at P204, the agc test point.
2. Voltages ± 20% of those shown are normal.
3. All resistors are 10%, one-half watt, unless otherwise indicated.
4. All capacitors are 20%, 500V, unless otherwise indicated.
5. All capacitors are ceramic, unless indicated as follows:
   M—mica, P—paper, ±—electrolytic

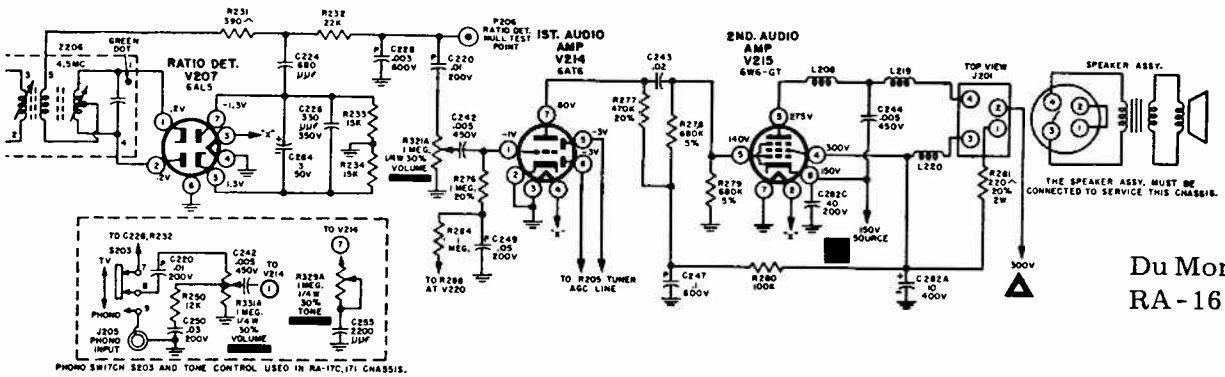

Du Mont Chassis
RA-166/167, 170/171

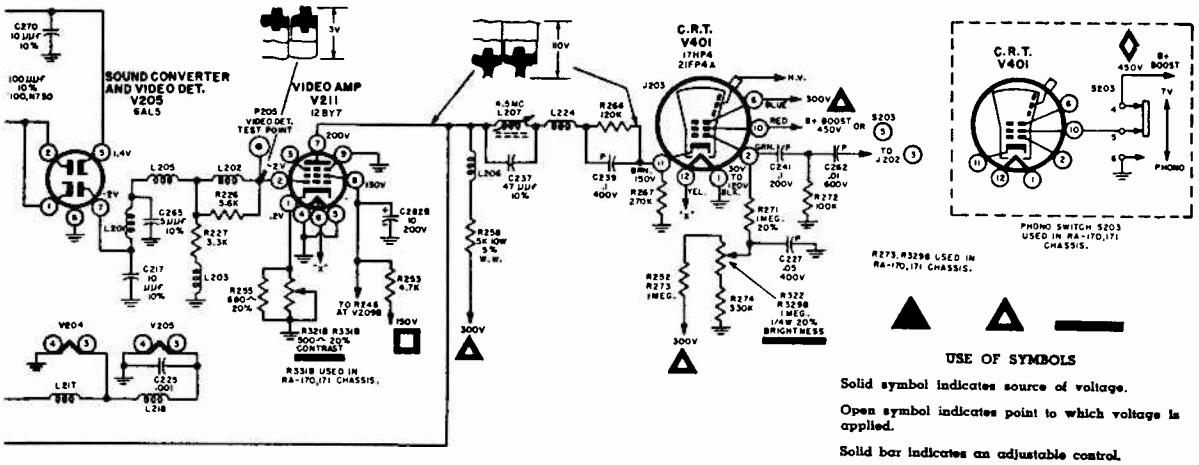

USE OF SYMBOLS

Solid symbol indicates source of voltage.

Open symbol indicates point to which voltage is applied.

Solid bar indicates an adjustable control.

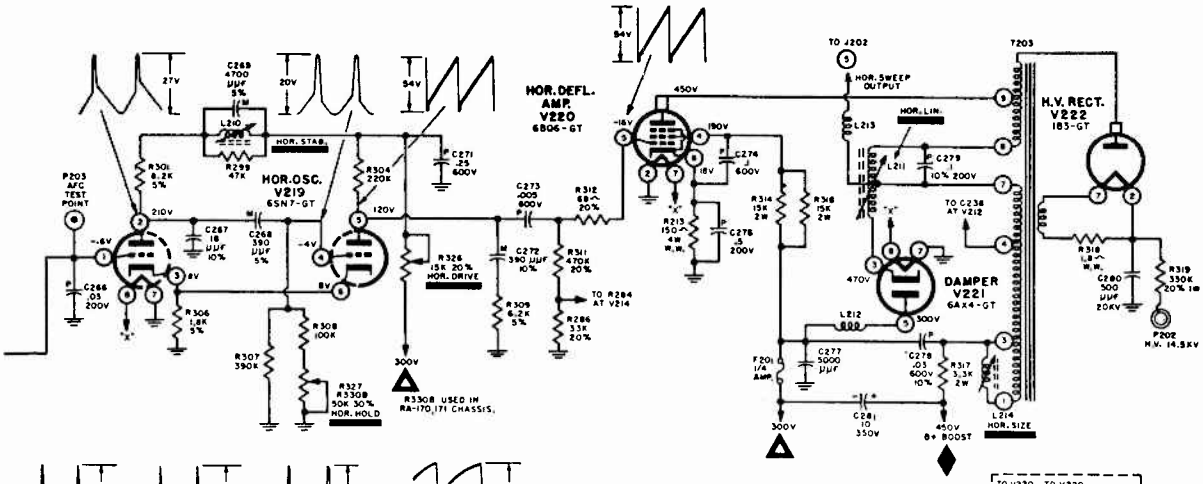

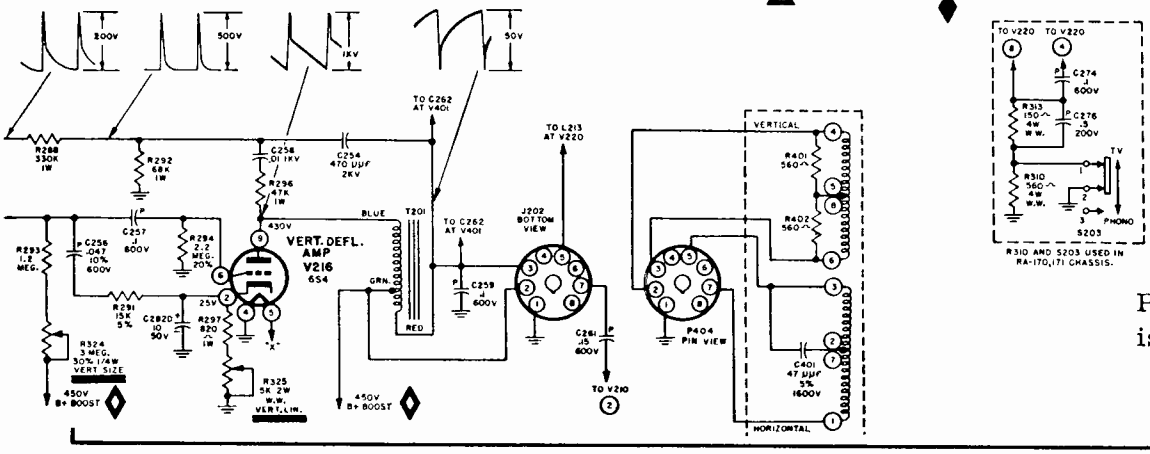

Power supply circuit is on page 45.

VIDEO IF ALIGNMENT RA-166/167, 170/171

Place STATION SELECTOR between channels to disable oscillator. Remove fuse, F201. Connect a short length of wire to pin 5 of V101 (see Figure 1). Use the lowest VTVM range for all steps.

Step	Signal Generator Frequency	Signal Generator Connect to	Output Indicator	Connect to	Adjust	Remarks
1	44.5 mc No Sweep	Pin 5 V101 (1)	VTVM	Pin 2, V211 [1VTVM]	Z205 for maximum reading	Set signal generator output to maintain reading on lowest range of VTVM.
2	42.5 mc No Sweep	As Above (2)	VTVM	As Above [2VTVM]	Z204 for maximum reading	Same
3	46.1 mc No Sweep	As Above (3)	VTVM	As Above [3VTVM]	Z203 (bottom) for maximum reading	Same
4	43.75 mc No Sweep	As Above (4)	VTVM	As Above [4VTVM]	Z202 for maximum reading	Same
5	47.25 mc	As Above (5)	VTVM	As Above [5VTVM]	Z203 (top) for minimum reading	Increase signal generator output to obtain reading on VTVM.
6	43.5 mc center freq. 10 mc deviation (min.)	As Above (6)	Oscillograph through XTAL	Pin 5 V201 [6XTAL]	Mixer Plate Coil (L109) and Z201 (top) for 44.8 mc marker on one peak Z201 (bottom) for 42.5 mc marker on other peak.	Adjust for waveform below. 
7	4.5 mc 400 CPS AM	Pin 2 V211 (7)	Oscillograph through XTAL	Junction R266, R267, and C239 [7XTAL]	L207 for minimum reading	

SOUND IF ALIGNMENT

8	4.5 mc Approx. 1 MC sweep	Pin 5 V205B (8)	Oscillograph through XTAL	Pin 7 V207 [8XTAL]	L204 and Z206 (bottom)	Adjust for waveform below. 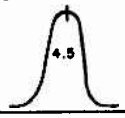
9	As Above	As Above (9)	Oscillograph Direct	Junction R232, C228 [9DIR]	Z206 top	Adjust for waveform below. 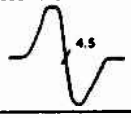

ALTERNATE SOUND IF ALIGNMENT — USING TV SIGNAL

Step	Signal Source	Output Indicator	Connect to	Adjust	Remarks
8	TV Signal	VTVM	Pin 7, V207 [8XTAL]	L204 Z206 (bot.) for maximum reading	Teleset must be tuned for best picture.
9	As Above	VTVM	Ratio Det. Test Point P206	Z206 Top for zero reading	As Above

The material on Du Mont sets in this manual is presented through the courtesy of Allen B. Du Mont Laboratories, Inc.

Du Mont Chassis RA-166/167, 170/171

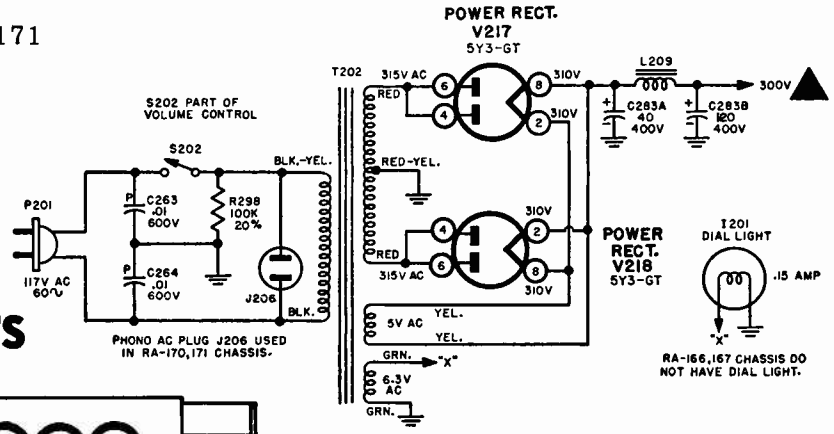

ALIGNMENT TEST POINTS

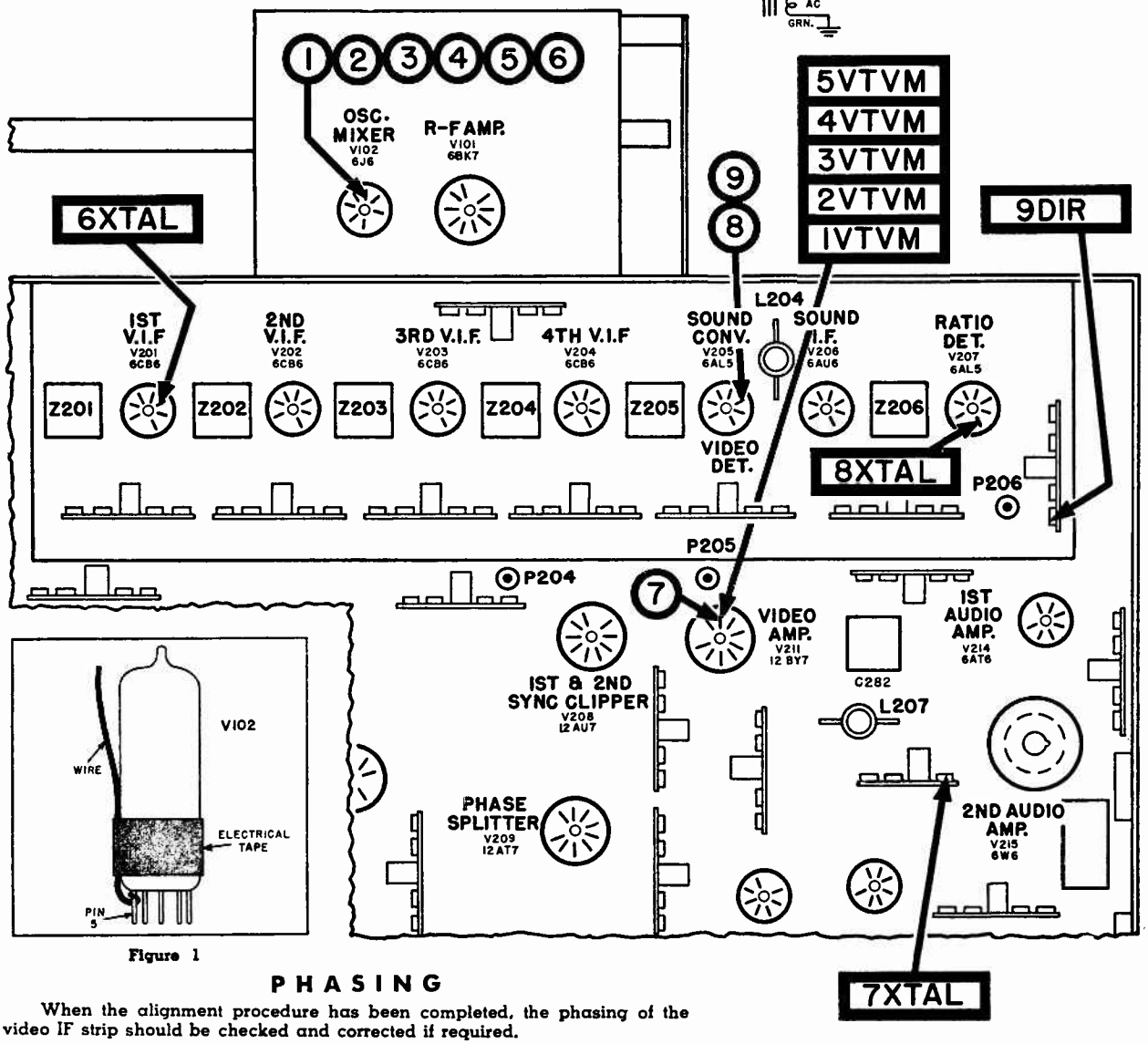

Figure 1

PHASING

When the alignment procedure has been completed, the phasing of the video IF strip should be checked and corrected if required.

1. Tune the receiver to the best signal available, preferably a station transmitting a test pattern.
2. Adjust the Fine Tuning control until the sound in the picture is eliminated.
3. Carefully examine the picture for trailing whites, or the presence of spurious black response (smear) following black elements of the picture.
4. If either of these conditions is encountered, adjust the top slug of Z201 not more than ½ turn to eliminate the condition.

Du Mont

TROUBLESHOOTING PROCEDURES

PICTURE Symptom	Procedure
Bright Horizontal Line Loss of Vertical Size	1. Substitute V213 and V216 2. Check voltages, waveforms and associated components of V213 and V216 3. Check yoke and vertical output transformer, T201
Critical Vertical Hold	1. Check waveforms in integrator network
Drive Line in Center	1. Check setting of drive control
Insufficient Horizontal Size	1. Check settings of horizontal size and linearity controls 2. Substitute V220, V221 and V219 3. Check boosted B+ and associated components 4. Check C279 and C278
Insufficient Vertical Size	1. Check setting of vertical-size control **Control Has No Effect** 2. Check vertical size pot. R324 **Control Does Not Give Normal Size** 2. Substitute V213 and V216 3. Check voltages, waveforms and associated components of V213 and V216
Loss of Horizontal and Vertical Hold Probable Cause: Faulty sync clipper stage	1. Check settings of front panel hold controls 2. Substitute V208 and V209 3. Check voltages, waveforms and associated components of V208 and V209
Loss of Vertical Hold Only	1. Substitute V208 2. Check associated components of V208B
No Horizontal Hold - or Critical Horizontal Hold Probable Cause: Defective a-f-c circuit	1. Check setting of front panel horizontal hold control 2. Substitute V210 and V219 3. Check setting of L210 horizontal-stabilizer control located on rear of chassis 4. Check voltages, waveforms and associated components of V210 and V219
Picture Oversize - Low Brightness Probable Cause: Insufficient high voltage	1. Substitute V222 2. Check h-v rectifier components
Picture Too Small (Horizontal and Vertical) Probable Cause: B+ low	1. Substitute V217 and V218 2. Check B+ line and associated components
Poor Focus	1. Check setting of ion trap
Poor Horizontal Linearity	1. Check setting of horizontal-linearity control 2. Substitute V220 and V221 3. Check voltages, waveforms and components associated with V220 and V221
Poor Vertical Linearity	1. Check setting of vertical-linearity control 2. Substitute V216 3. Check voltages, waveforms and associated components of V216 and 213
Sound Bars In Picture Probable Cause: Misalignment	1. Check fine tuning adjustment 2. Check video i-f alignment
Vertical Instability Probable Cause: Faulty vertical oscillator	1. Check setting of front panel vertical hold control 2. Substitute V213 and V216 3. Check voltages, waveforms and associated components of V213 and V216
Weak Picture	1. Substitute V211 2. Check voltages and components associated with V211

EMERSON RADIO AND PHONOGRAPH CORPORATION

The service material presented below and on the next seven pages is applicable to Emerson television chassis listed in the first column of the table below and used in models enumerated in the second column. Parts of this service material is exact for only Chassis 120163B, and notes in the column at the right explain major differences that exist for each of the other chassis.

Chassis	Models	Main differences from material given.
120163B	716D, 717D, 719D	Exact material given. Circuit on the next two pages.
120163D	722D	Cabinet only is different.
120164B	711B, 712B, 720B	Has phono input and switching arrangement, uses 21MP4 picture tube, 1B3 rectifier.
120166D	721D, 728D	Electrically same except for automatic horizontal frequency control using a multi-vibrator V-13 controlled by phase detector V-12B; + L-11 phase coil.
120167D	731D	Same as 120166D, except it is a combination + clock.
120168D	716F, 717F, 719F, 727D	Identical to 120163B except has automatic frequency control explained under 120166D.
120169B	711F, 712F, 720D, 732B, 734B	Identical to 120164B except has automatic horizontal frequency control explained under 120166D.

In fringe areas there is generally a higher ratio of electrical impulse noise (ignition, neon signs, electrical motors, etc.) to signal which might tend to effect sync. operation. To reduce this condition this chassis has been equipped with a "Fringe Compensator." This compensator is located at the rear of the chassis, and can be adjusted to handle the effects of electrical interference in most fringe locations. This compensator is provided with an on-off switch so that it can be disconnected when not required.

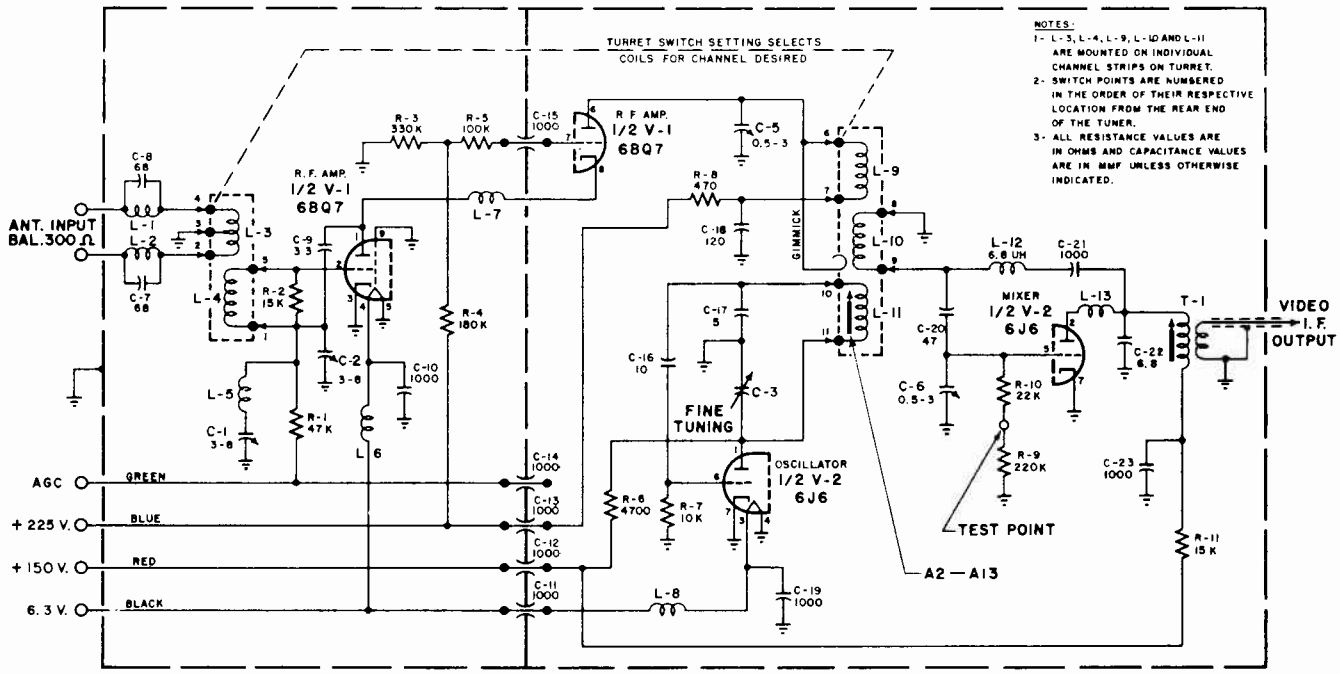

SCHEMATIC DIAGRAM OF TUNER #470696 USED ON CHASSIS 120163-D

MOST-OFTEN-NEEDED 1953 TELEVISION SERVICING INFORMATION

Emerson Chassis 120163B

RESISTANCE READINGS FOR CHASSIS 120163-D

SYMBOL	TUBE PIN NUMBERS										
	PIN 1	PIN 2	PIN 3	PIN 4	PIN 5	PIN 6	PIN 7	PIN 8	PIN 9	PIN 10	PIN 11
V-1	1.1 meg	47	0.3	0	⊕11 K	⊕11 K	0				
V-2	1.1 meg	47	0.1	0	⊕11 K	⊕11 K	0				
V-3	0.1	180	0.3	0	⊕11 K	⊕11 K	0				
V-4	0	800 K	0.5	0	5 K	0	5 K				
V-5	1.2 meg	contrast 0-1.5 K	.1	0	⊕18 K	⊕11 K	cont. 0-1.5 K				
V-6	1.2 meg	0	0	.1	⊕11 K	⊕11 K	220				
V-7	47 K	0	0	.1	⊕11 K	8 K	0				
V-8	0	100 K	0	.1	200 K	0	100 K				
V-9	10 meg	0	0	.1	1.6 meg	fringe comp. .1 meg - 2.2 meg	240 K				
V-10	n.c.	0	⊕13 K	⊕13 K	470 K	13.5 K	0	470			
V-11	4700	2.3 meg	0	.1	.1	45 K	15 K	0	0		
V-12	2.2 meg	10 K	0	2.4 meg	10 meg	0	0	.1			
V-13	1.5 meg	⊕H-HOLD 11K-55K	400 K	500 K	70K	0	0	0			
V-14	n.c.	0	n.c.	⊕ 18 K	470 K	n.c.	0	100	Cap of 6BQ6		95K
V-15	PIN 2 AND 7 INFINITE PLATE 95K										
V-16	n.c.	n.c.	95 K	n.c.	⊕11.5 K	n.c.	95K	95 K			
V-17	150	150 K	2200	V. Hold 700 K-1.7 meg	V. Size 1.2 meg-2.8 meg	2200	0	0			
V-18	n.c.	0	⊕11 K	⊕11 K	2.2 meg	1.7 meg	0	V. Lin 470-5 K			
V-19	n.c.	⊕11 K	n.c.	21	n.c.	21	n.c.	⊕11 K			
V-20	n.c.	⊕11 K	n.c.	21	n.c.	21	n.c.	⊕11 K			
V-23	0	0	n.c.	n.c.	n.c.	focus 0-.5 meg -90 K	n.c.	n.c.	n.c.	800 K	240 K

⊕ Varying resistance - wait until meter settles (about 30 sec.)

All controls in position for normal picture.
All measurements taken with a vacuum tube voltmeter and ohmmeter.
All readings listed in tables were taken between points shown and chassis.

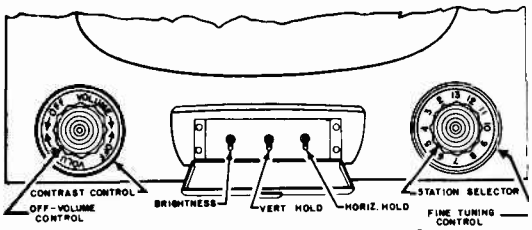

FRONT PANEL CONTROLS

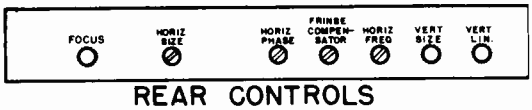

REAR CONTROLS

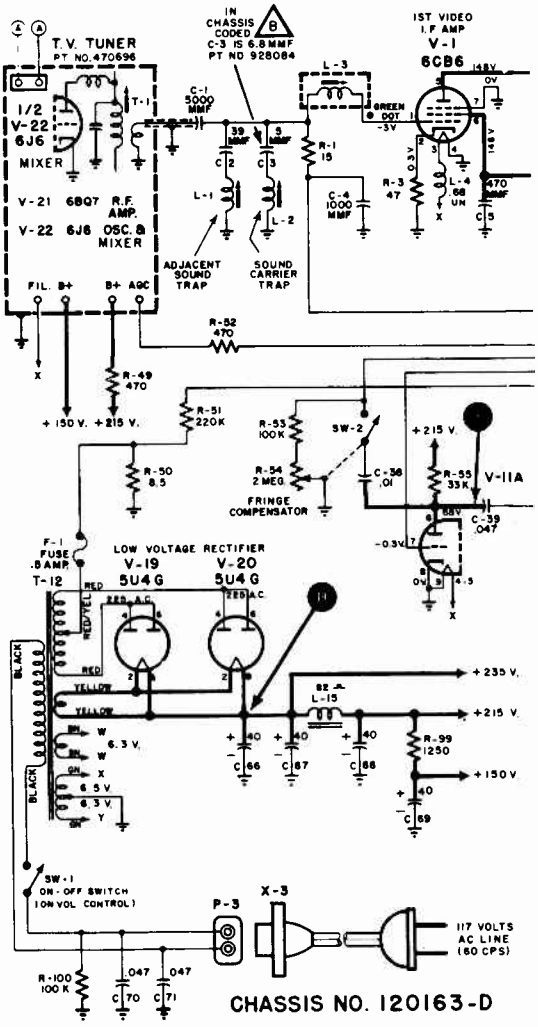

Connect 3 volt bias battery to both I.F. and R.F. AGC. circuits, positive terminal to chassis, negative terminal to junction of R-16, C-19, C-18. Add a jumper wire from this junction to junction of R-8, R-14, C-7 so that the bias battery is also applied to I.F. AGC.

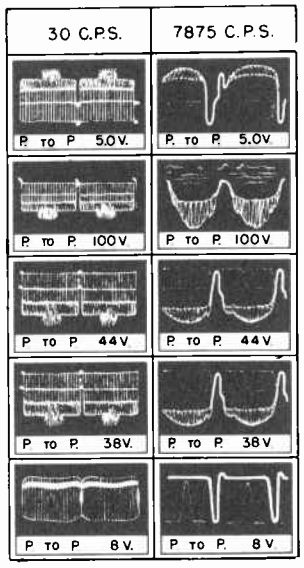

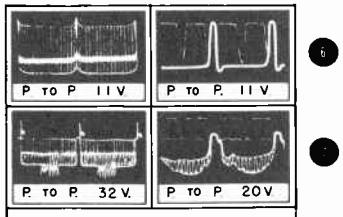

VIDEO AND / OR SYNC. TROUBLES (LACK OF CONTRAST, TEAR, OVERLOAD, NO HORIZONTAL OR VERTICAL HOLD, POOR HOLD, JITTER, ETC.)

FILTER TROUBLES (LOW B+ AND B-, A.C IN PICTURE, NO SYNC., NON LINEAR SWEEPS)

NOTE

THE RIPPLE VOLTAGE AT OTHER POINTS IN THE FILTER NETWORK IS LESS THAN 02 VOLTS PEAK TO PEAK

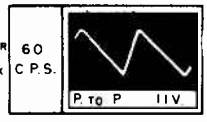

Slight peak to peak voltage differences may be noticed if chassis is triangle code marked.

The wave shapes shown here are arranged so as to give the serviceman an easy method of signal tracing. The peak to peak voltage given may vary slightly depending on signal strength and component variations.

To accurately observe the wave shapes, the relatively high input capacity of an oscilloscope must be reduced so as not to change the operating characteristics of the television set. Failure to do this will result in wrong wave shape readings.

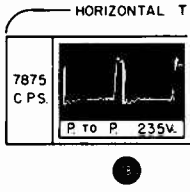

Connect antenna and tune receiver to channel where best reception has been obtained in the past.

Low end of the probe is connected to CHASSIS and the contrast control is set at MAXIMUM CONTRAST.

The 30 and 7875 C.P.S. oscilloscope sweep settings are used so as to permit the serviceman to observe two cycles of the wave shape.

MOST-OFTEN-NEEDED 1953 TELEVISION SERVICING INFORMATION

Emerson Chassis 120163B

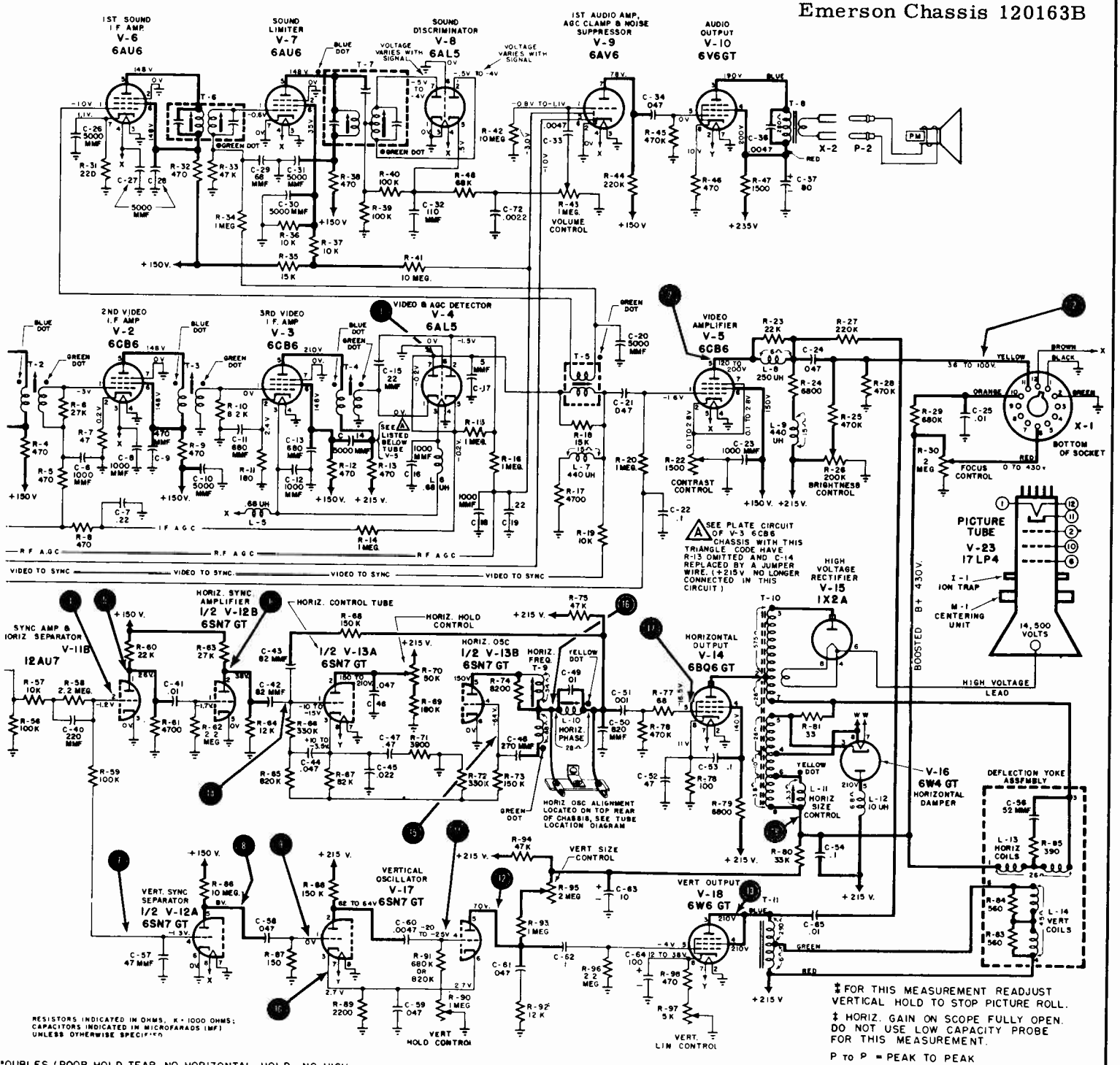

TROUBLES (POOR HOLD, TEAR, NO HORIZONTAL HOLD, NO HIGH VOLTAGE, POOR HORIZONTAL LINEARITY).

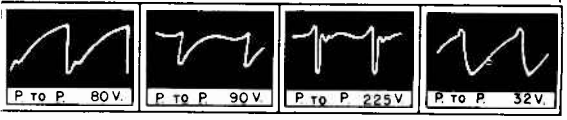

VERTICAL TROUBLES (NO VERTICAL HOLD, NO VERTICAL SIZE, POOR VERTICAL HOLD, VERTICAL JITTER, POOR VERTICAL LINEARITY).

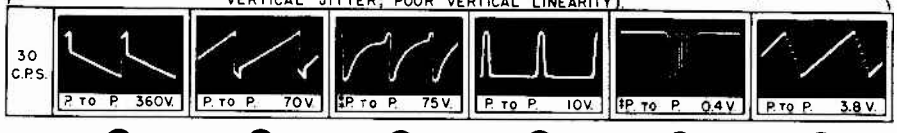

ALL WAVE SHAPES TAKEN WITH HORIZ. OSC. TUBE (V-13) REMOVED WITH THE EXCEPTION OF WAVE SHAPES 10 THROUGH 18.

A wave shape seen in your oscilloscope may be upside down from same wave shape shown here. This will depend on the number of stages of amplification in the oscilloscope used.

Emerson Chassis 120163B, continued.

ALIGNMENT

(Presented on the next five pages.)

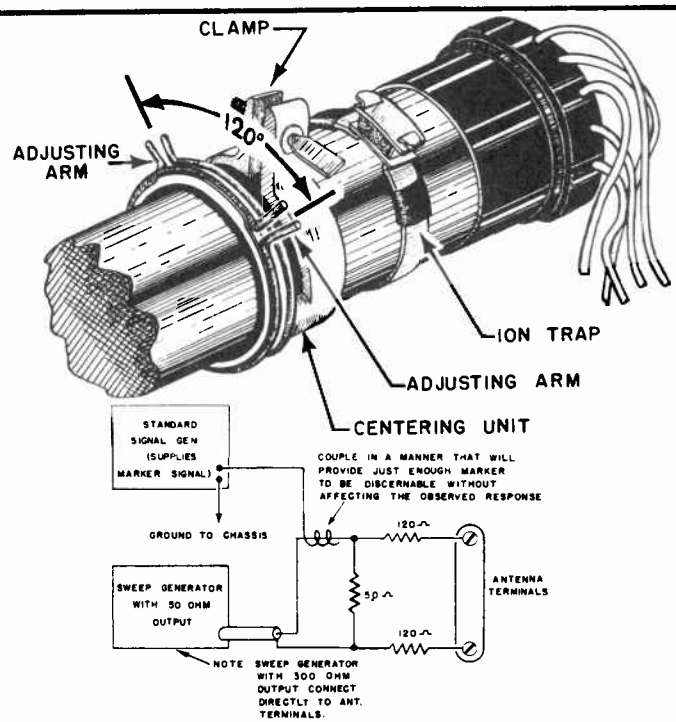

Figure 4. Generator Connections for Television R.F. Channel Alignment.

ALIGNMENT

a. Equipment Required - A sweep generator, (10 MC. sweep with center frequency of 44 MC. plus all necessary R.F. sweep frequencies as listed in R.F. Table), accurate marker generator, oscilloscope and V.T.V.M. are required for alignment. The marker generator must supply frequencies of 4.5 MC., 40 to 48 MC. and 50 to 216 MC.

b. Alignment Points - The location of all I.F. transformers, Tuned Circuits, and trimmers shown in Figure 8.

TV R.F. & MIXER ALIGNMENT

Connect 3 volt bias battery to both I.F. and R.F. AGC. circuits, positive terminal to chassis, negative terminal to junction of R-16, C-19, C-18. Add a jumper wire from this junction to junction of R-8, R-14, C-7 so that the bias battery is also applied to I.F. AGC.

SWEEP & MARKER GENERATOR		MARKER GEN.	OSCILLOSCOPE CONNECTIONS	MISCELLANEOUS INSTRUCTIONS	TRIMMER OR SLUG	TYPE OF ADJUSTMENT AND OUTPUT INDICATION
CONNECTIONS	FREQ. RANGE	FREQ.				
Connect as shown in Fig. 4 and adjust sweep controls for width so that complete channel response may be observed as shown in Fig. 5	Channel #12 207 MC. Center Freq.	209.75 MC. Sound Carrier 205.25 MC. Pix Carrier	Vert. input of scope through 10K resistor to test point on tuner Fig. 8 Low side to chassis	Set Channel Selector to #12 NOTE Keep output of R.F. Marker Generator at a level that provides a readable marker but does not distort the curve that is being observed on the scope.	C-2 R.F. Amp. Input Trimmer C-1 I.F. Trap C-5 R.F. Plate Trimmer C-6 Mixer Grid Trimmer	Adjust Trimmers C-2, C-5 and C-6 to obtain response shown in Fig. 5 IMPORTANT: When adjusting trimmers C-2, C-5 and C-6 it will be noted that the band pass characteristic can be broadened by sacrificing amplitude. It is undersirable to overly broaden the curve as that would result in a loss of sensitivity. C-1 should normally be set at maximum capacity (screw all the way in) unless interference is encountered. See note below.
Same as Above	#13 213 MC.	*215.75 MC. **211.25 MC.	Same as Above	Set Channel Selector to #13 (See Note Above)		The r-f band pass characteristic of the other television channels should now be checked without disturbing the settings of trimmers C-2, C-5 and C-6. Adjust the r-f sweep generator and marker generator for operation on the other television channels, observing position of both the sound carrier and picture carrier markers. 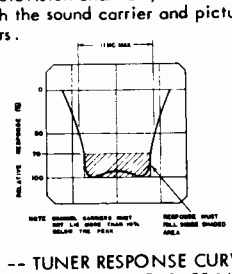 Figure 5 -- TUNER RESPONSE CURVE SHOWING BAND-PASS LIMITS. The response for all channels should meet with the requirements of Fig. 5. To do so it may be necessary to compromise by slightly changing the initial channel #12 adjustments of C-2, C-5 and C-6 while switched to channel which does not conform.
	#11 201 MC.	*203.75 MC. **199.25 MC.		Set Channel Selector to #11 (See Note Above)		
	#10 195 MC.	*197.75 MC. **193.25 MC.		Set Channel Selector to #10 (See Note Above)		
	#9 189 MC.	*191.75 MC. **187.25 MC.		Set Channel Selector to #9 (See Note Above)		
	#8 183 MC.	*185.75 MC. **181.25 MC.		Set Channel Selector to #8 (See Note Above)		
	#7 177 MC.	*179.75 MC. **175.25 MC.		Set Channel Selector to #7 (See Note Above)		
	#6 85 MC.	* 87.75 MC. ** 83.25 MC.		Set Channel Selector to #6 (See Note Above)		
	#5 79 MC.	* 81.75 MC. ** 77.25 MC.		Set Channel Selector to #5 (See Note Above)		
	#4 69 MC.	* 71.75 MC. ** 67.25 MC.		Set Channel Selector to #4 (See Note Above)		
	#3 63 MC.	* 65.75 MC. ** 61.25 MC.		Set Channel Selector to #3 (See Note Above)		
	#2 57 MC.	* 59.75 MC. ** 55.25 MC.		Set Channel Selector to #2 (See Note Above)		

*Sound Carrier Marker
**Picture Carrier Marker

NOTE: C-1 IS AN I.F. TRAP AND CAN BE ADJUSTED IN THE FIELD TO REDUCE ANY INTERFERENCE WHICH MAY AFFECT CHANNEL #2 FROM A NEARBY TRANSMITTER OPERATING IN THE 40 MC. BAND.

I.F. ALIGNMENT Emerson Chassis 120163B, etc., continued.

1) Tune receiver to unused Channel 10 or 12.

2) Connect 3 volt bias battery with negative terminal to I.F. AGC. (Junction R-8, C-7, R-14) positive terminal to chassis.

3) Connect D.C. V.T.V.M. to Pin 7 V-11A sync. separator (video take off point) see Fig. 7.

4) Connect terminated marker generator to floating shield of converter tube V-22 6J6. (Shield raised slightly so that it does not make contact with chassis). Use unmodulated marker. See Fig. 7.

MARKER GENERATOR	ADJUST	PROCEDURE
45.75 MC. Unmodulated	T-4	Peak for maximum response. Adjust output of signal generator so that maximum response does not produce more than -2V. D.C. on V.T.V.M.
43.2 MC. Unmodulated	T-3	"
45.3 MC. Unmodulated	T-2	"
42.0 MC. Unmodulated	L-3 T-1	"
41.25 MC. Unmodulated	L-2	Adjust trap for minimum response. Increase output from signal generator so that a true minimum position can be found.

5) Connect vertical input of an oscilloscope instead of V.T.V.M. to Pin 7 of V-11A with vertical scope gain set at, or near, maximum. (Horizontal scope sweep set at 400 cycles).

MARKER GENERATOR	ADJUST	PROCEDURE
47.25 MC. 400 Cycles Amp. Mod.	L-1	With signal generator set at maximum output, adjust L-1 for minimum vertical response on scope.

6) Now that all the I.F. coils and transformers have been set, the overall response can be observed and adjusted if necessary.

SIGNAL GENERATOR INPUT			MEASURING INSTRUMENT	ADJUST	PROCEDURE
CONNECTION	FREQUENCY				
	SWEEP	MARKER			
Connect terminated sweep and marker as shown in Fig. 7.	Center frequency 44 MC. 10 MC. Sweep	45.75 MC.	Scope connected to Pin 7 V-11A	T-2	If 45.75 MC. doesn't lie from 60 to 70% down adjust T-2 (see fig. 6) for tolerances. *

Providing overall curve is within tolerances as shown below, no further adjustments are needed. If band width or tilt is not as specified, repeat entire alignment procedure. If still out then a slight retouching is permissible. TRAPS L-1 and L-2 MUST BE ADJUSTED AS INDICATED ABOVE. DO NOT RE-ADJUST WHILE OBSERVING OVERALL I.F. RESPONSE CURVE.

*KEEP OUTPUT SIGNAL GENERATOR AS LOW AS POSSIBLE WHEN OBSERVING THE OVERALL I.F. SHAPE SINCE TUBE OVERLOAD MIGHT RESULT AND THE RESPONSE WILL APPEAR INCORRECTLY FLAT AND WIDE.

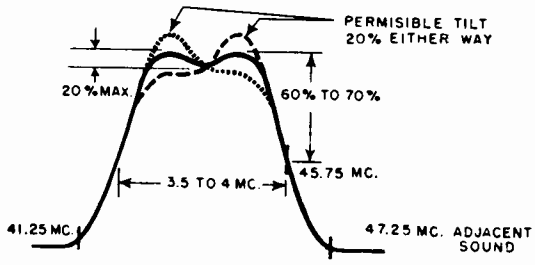

Figure 6. OVERALL I.F. RESPONSE CURVE

NOTE: It may be impossible to observe the 47.25 MC. marker with the average service equipment due to the high attenuation of trap L-1 (adjacent sound).

Alignment for Emerson Chassis 120163B, etc., continued.

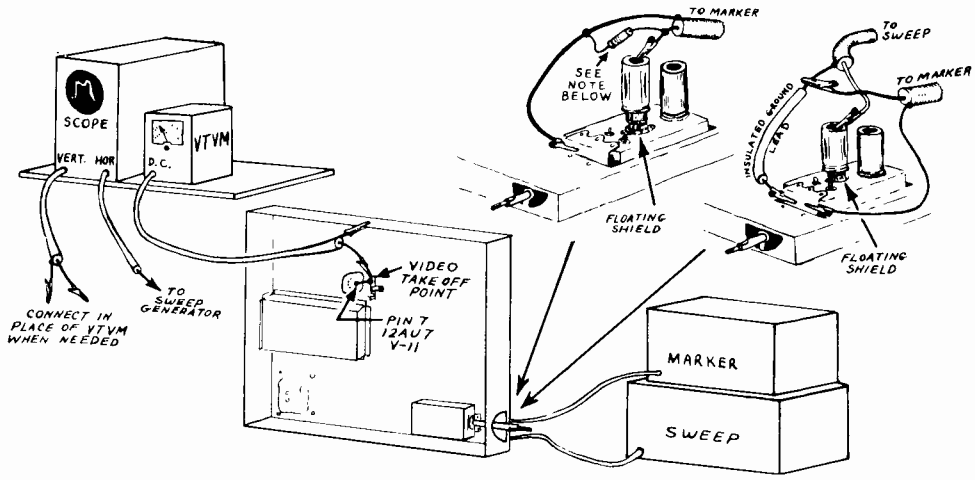

Figure 7. CONNECTIONS FOR I.F. ALIGNMENT.

All instrument leads should be dressed as directed and as short as possible to prevent interaction between input and output leads. Failure to do this may result in an unstable response indication.

NOTE: It is important that the output cable of the sweep and marker generator be properly terminated in their characteristic impedance which is usually from 50 to 75 ohms. If this termination has not been built into the end of the cable by the instrument manufacturer, then a resistor of the proper value (characteristic impedance) should be connected across the output of each generator cable as shown above.

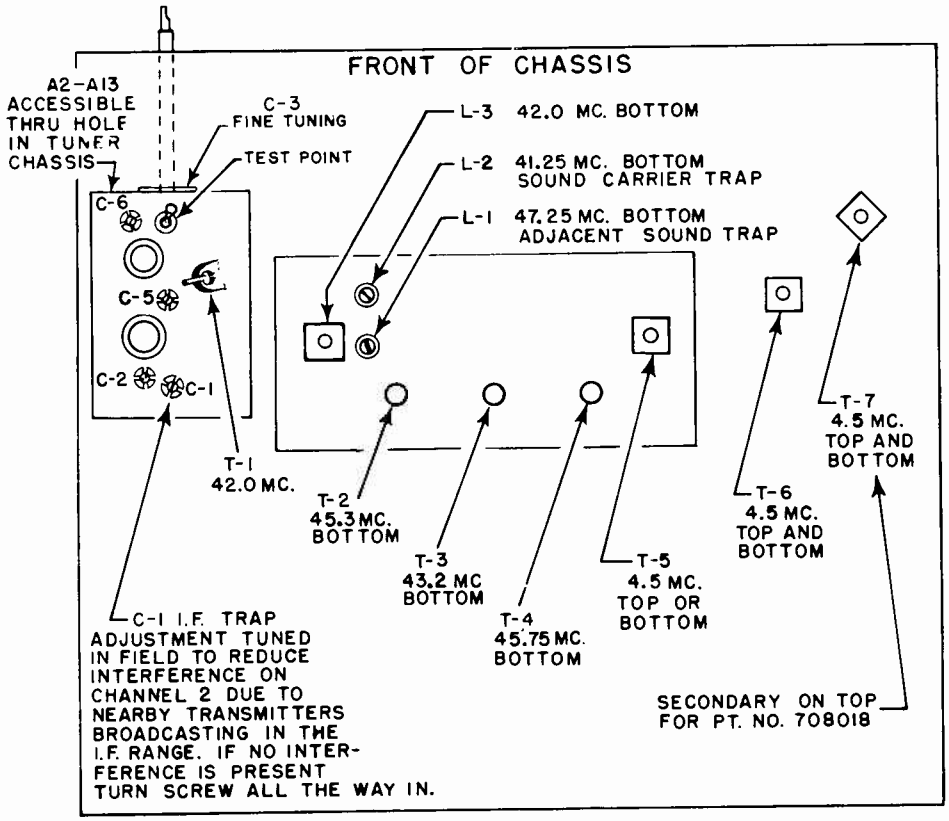

Figure 8 - LOCATION OF ALIGNMENT POINTS (TOP VIEW)

Alignment for Emerson Chassis 120163B, etc., continued.

R.F. OSCILLATOR ALIGNMENT

1. Connect marker and sweep generator as shown in Figure 4, low side to chassis.
2. Connect scope to Pin #7 V-11A (12AU7).
3. Connect 3 volt bias battery as described under R.F. Alignment.
4. Before undertaking oscillator alignment be sure I.F. circuits are correctly aligned for band pass characteristic and trap settings.
5. During oscillator alignment, it is necessary to set the fine tuning control so that the tooth on the fine turning cam points downward.

MARKER SIGNAL GENERATOR FREQUENCY	SWEEP GENERATOR FREQUENCY	MISCELLANEOUS INSTRUCTIONS	TRIMMER OR SLUG	TYPE OF ADJUSTMENT AND OUTPUT INDICATION
*209.75 MC. **205.25 MC.	Channel #12 Center Frequency 207 MC. 10 MC. Sweep	Be sure that fine tuning control has been properly positioned (tooth on the cam pointing down) NOTE During this step and thru-out all succeeding steps it is necessary to: 1. Keep output of sweep generator at a level that does not allow the reading on a VTVM to exceed minus 1 volt when connected across video detector load at minimum sweep width. 2. Keep output of standard signal generator at a level that provides a readable marker but does not distort the curve that is being observed on the scope.	Adjust Slug A-12	NOTE: Before making the following adjustment, advance the vertical gain control on the scope in order to magnify the sound trap portion of the response curve. Then, use a non-metallic screwdriver to adjust channel #12 oscillator slug (accessible thru hole on front of r-f tuner unit and shift response curve so that sound carrier marker is located at the position indicated below. Now reduce gain control setting of scope to restore pattern to normal amplitude and observe position of picture carrier marker. This marker should appear on the high frequency side of the characteristic curve. The amplitude of the picture carrier should be between 60 and 70% down from peak response.
*215.75 MC. **211.25 MC.	Channel #13 213 MC.	Set Channel Selector to #13 (See note above)	Adjust the r-f sweep generator and marker generator for operation on other television channels; set marker generator to sound carrier frequency. After setting Channel Selector to corresponding channel, adjust oscillator slug thru hole on front of r-f tuner unit. (A-2 to A-13) This permits response curve to be shifted so that sound carrier marker will appear at the position indicated below. 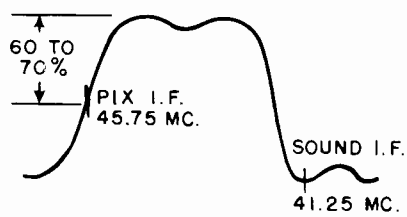 TYPICAL OVERALL RESPONSE CURVE NOTE: Make sure that cam on fine tuning control shaft remains properly positioned during this step (tooth on the cam pointing downward).	
*203.75 MC. **199.25 MC.	Channel #11 201 MC.	Set Channel Selector to #11 (See note above)		
*197.75 MC. **193.25 MC.	Channel #10 195 MC.	Set Channel Selector to #10 (See note above)		
*191.75 MC. **187.25 MC.	Channel #9 189 MC.	Set Channel Selector to #9 (See note above)		
*185.75 MC. **181.25 MC.	Channel #8 183 MC.	Set Channel Selector to #8 (See note above)		
*179.75 MC. **175.25 MC.	Channel #7 177 MC.	Set Channel Selector to #7 (See note above)		
* 87.75 MC. ** 83.25 MC.	Channel #6 85 MC.	Set Channel Selector to #6 (See note above)		
* 81.75 MC. ** 77.25 MC.	Channel #5 79 MC.	Set Channel Selector to #5 (See note above)		
* 71.75 MC. ** 67.25 MC.	Channel #4 69 MC.	Set Channel Selector to #4 (See note above)		
* 65.75 MC. ** 61.25 MC.	Channel #3 63 MC.	Set Channel Selector to #3 (See note above)		
* 59.75 MC. ** 55.25 MC.	Channel #2 57 MC.	Set Channel Selector to #2 (See note above)		

NOTE: If an unsatisfactory overall response is obtained for a particular channel, observe R-F amp. and Mixer response curve for that channel (as described in R-F Amp. and Mixer Alignment Table). If characteristic does not conform reasonably well within the typical curve shown in Figure 5, then do the following things:

1. Check method of connecting scope, voltmeter and generator leads to eliminate possible distortion of observed response, or:
2. Attempt to obtain a better compromise for R.F. response on all channels by realigning R-F Amp. and Mixer circuits, or:
3. Try replacing Antenna, R-F and Oscillator coils for the particular channel.

*Sound Carrier Marker
**Picture Carrier Marker

Sound Alignment, Emerson Chassis 120163B, etc., continued.

1. Set receiver to channel #3.
2. Keep output of signal generator as low as possible so that a sharp maximum meter reading will be obtained with slight adjustment of the sound transformers.

STEP	SIGNAL GENERATOR INPUT		MEASURING INSTRUMENT	ADJUST	PROCEDURE
	CONNECTION	FREQUENCY			
1	Marker gen. through .01 mfd. to Pin 7 of V-4, Low side to chassis.	Marker-4.5 MC.	Connect V.T.V.M. through 10K resistor to junction of C-29, R-33, R-34, Low side to chassis.	T-5 (top) or bottom	Peak for maximum response Adjust generator input to produce one volt
2	"	Marker-4.5 MC.	"	T-6 (Top and bottom)	"
3	Connect sweep generator in parallel with marker gen. (Marker gen. lightly coupled)	Sweep-4.5 MC. (450 Kc. sweep) Marker-4.5 MC.	Replace V.T.V.M. with scope connected through 10K resistor to junction of R-48 and C-72. Low side to chassis.	T-7 (secondary Top #708018)	Position 4.5 MC. marker at center of S-curve by adjusting secondary.
4	"	"	"	T-7 (Primary)	Peak primary for maximum amplitude and linearity. Repeat step 3.

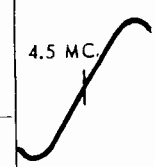

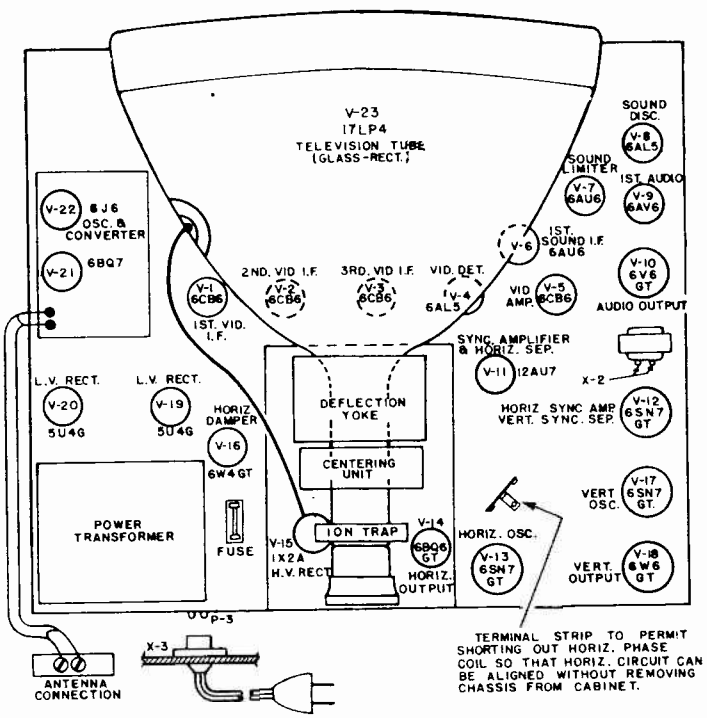

Figure 10 - TUBE LOCATIONS DIAGRAM

Alignment of Miracle Picture Lock

This can be done without removing chassis from cabinet. Short phasing coil, see note in Figure 10. Turn hor. hold control clockwise when viewed from front. Start with hor. fre. slug all the way out, rotate in until picture just locks into sync. Adjust hor. size if necessary. If picture falls out of sync., repeat previous step. Remove short from phasing coil. Starting with phasing coil slug all the way out rotate inwards until picture locks into sync. Rotate tuner turret off channel and back on same channel. If out of sync. rotate phase coil inwards until picture locks again. Check all other channels in same manner. Picture should stay in sync., if not rotate phase coil inwards until picture on on each channel stays in sync.

MOST-OFTEN-NEEDED 1953 TELEVISION SERVICING INFORMATION

Gamble-Skogmo *** Coronado Models 25TV2-43-9045C Table & 25TV2-43-9060B Console

Models 25TV2-43-9045B and 25TV2-43-9060A differ by having

V-8 6BL7
R-48 1500
R-57 1 meg.
R-59 15,000

Model 25TV2-43-9045A is like -9045B, but does not have AGC.

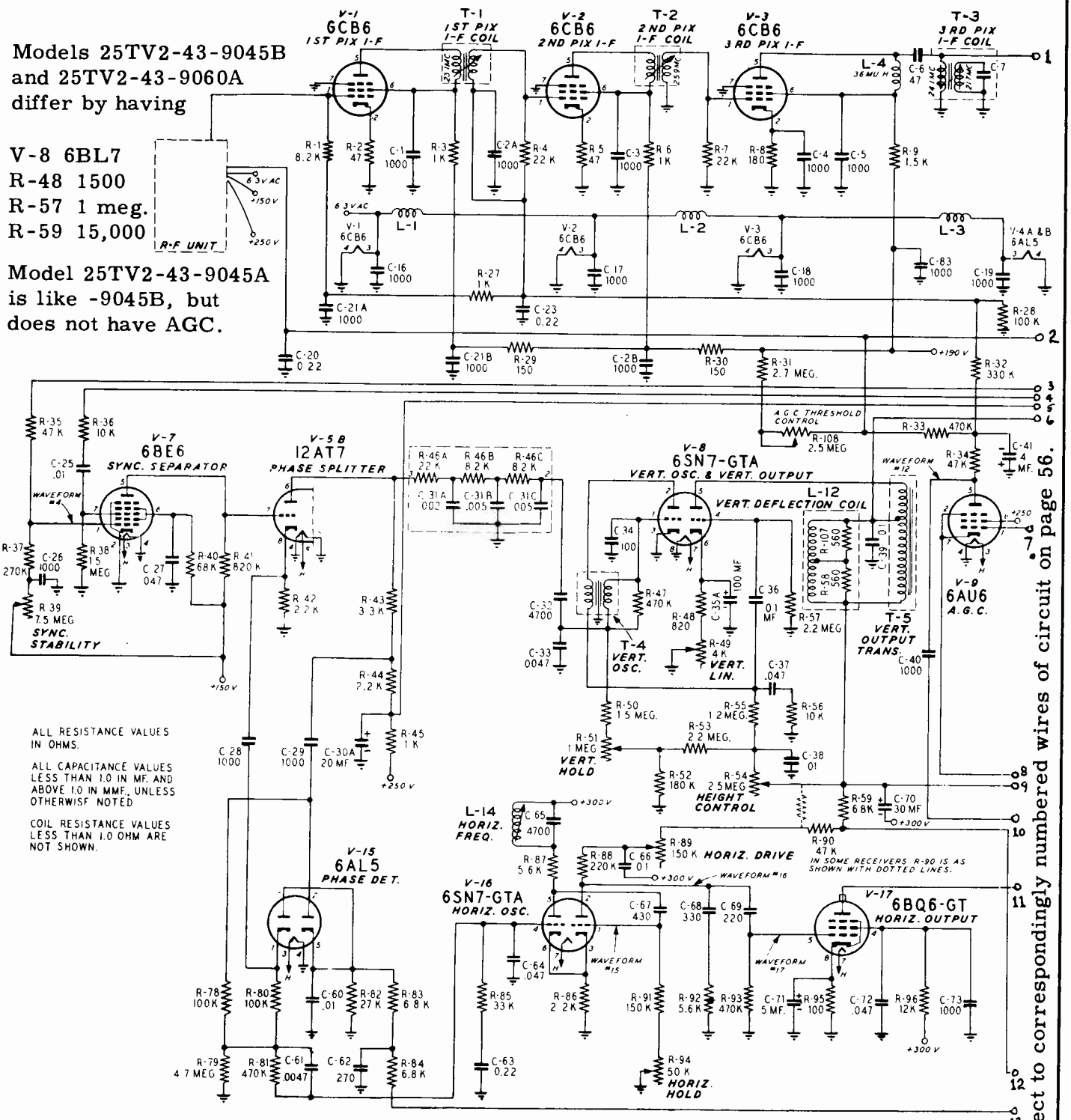

Connect to correspondingly numbered wires of circuit on page 56.

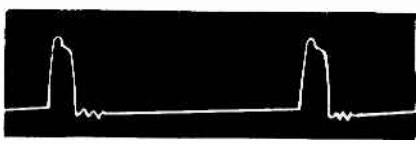

No. 12—6AU6 A.G.C.
450V P-P 15,750 C.P.S.

No. 16—6SN7 Hor. Osc. Plate
135V P-P 15,750 C.P.S.

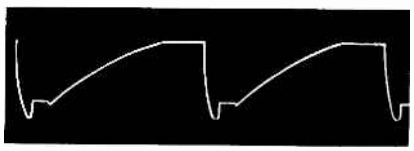

No. 17—6BQ6 Grid
120V P-P 15,750 C.P.S.

Gamble-Skogmo *** Coronado Models 25TV2-43-9045C Table & 25TV2-43-9060B Console

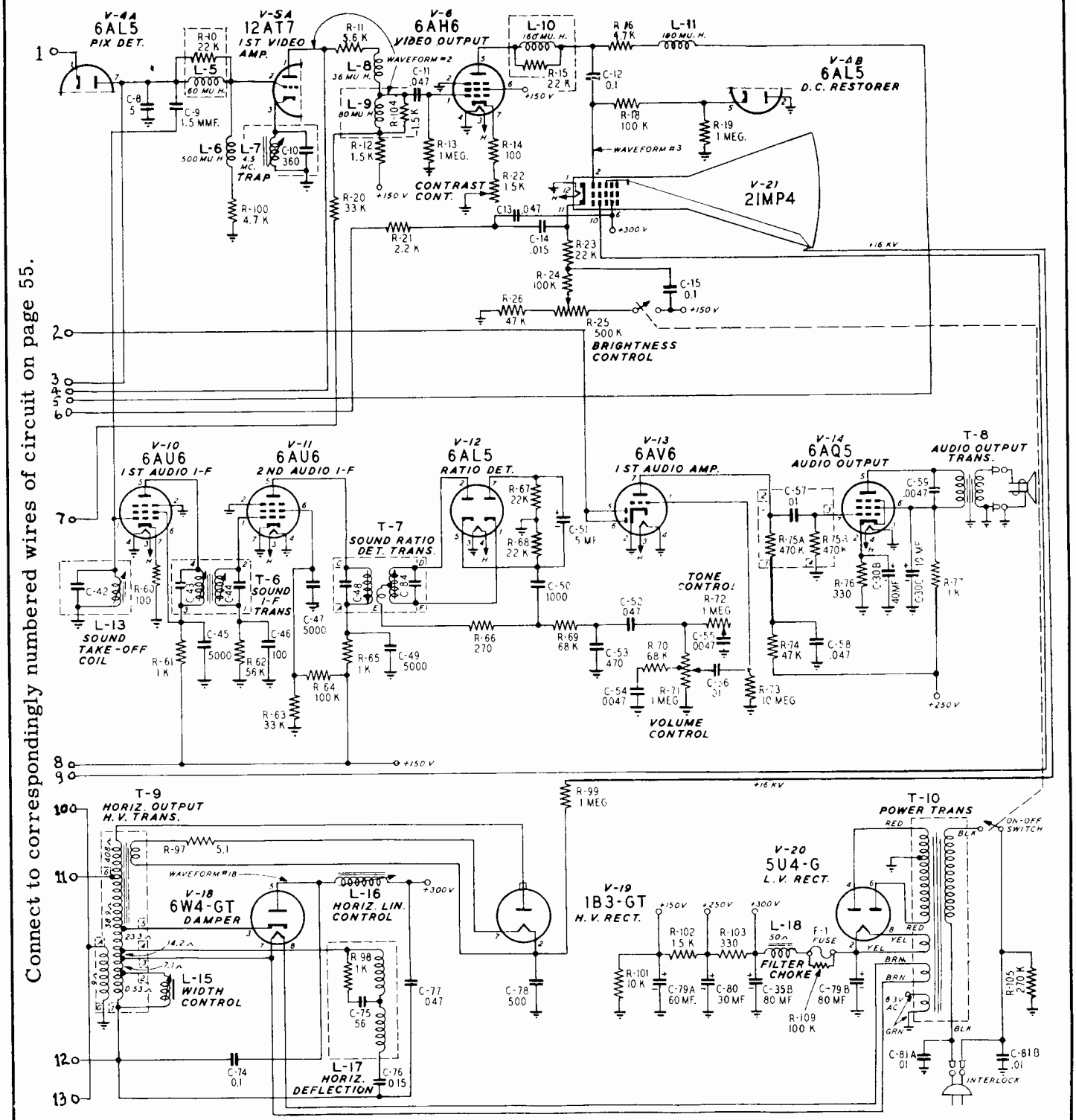

Connect to corresponding numbered wires of circuit on page 55.

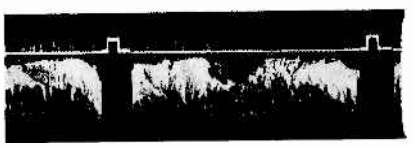

No. 2—12AT7 Plate 35V P-P 60 C.P.S. No. 2—6AH6 Grid 8V P-P 60 C.P.S.

No. 3—Pix Tube Grid 20-100V P-P 60 C.P.S.

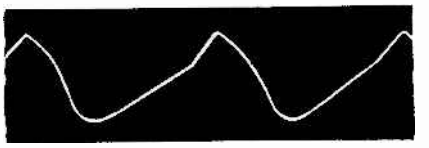

No. 18—6W4 Damper Plate 120V P-P 15,750 C.P.S.

GENERAL ELECTRIC

MODELS 20T2, 20C105, 20C106, 21C200, 21T4, AND 21T5 TELEVISION RECEIVERS.

The service material on models listed above is printed on the next fourteen pages. Separate circuit diagrams are shown for the group of 20T2, 20C105, 20C106, 21C200, and for the group of 21T4, 21T5, since there are minor differences in the circuits used. Other information is applicable to all models except where this fact is noted to differ.

REPLACEMENT OF PICTURE TUBE:

1. Remove chassis as outlined above.
2. Place cabinet on its front, being sure not to scratch it.
3. Remove the two mounting bracket screws fastening the bracket to the cabinet, see Fig. 4.
4. Loosen the two tube mounting draw nuts and remove them from their catch brackets.
5. Remove ion trap.
6. Slide out complete yoke assembly with attached PM focus unit. Remove the four nuts and pressure plates which fasten the picture tube support bracket to the cabinet.
7. Lift picture tube out of the cabinet and remove dust seal, tube strap and the four brackets by loosening the tube-strap screw.
8. Place picture-tube strap around rim of new picture tube, inserting the picture-tube support brackets between tube rim and strap as shown in Fig. 4.
9. Place the dust seal onto the eight hooks located around the tube mask inside the cabinet.
10. Place picture tube into cabinet repositioning the tube brackets to fit over stud screws in corners of cabinet and move picture tube to center tube in mask as viewed from front of the cabinet.
11. Unhook the dust seal and place it around the edge of the picture-tube face so that it contacts both tube and tube mask.
12. Tighten tube strap mounting screw and the four bracket nuts.
13. Install yoke and PM focus unit assembly and fasten tube mounting bracket to cabinet.
14. Install ion trap.
15. Connect picture tube socket to base of tube, high-voltage lead to picture-tube anode lead, two yoke plugs and two loudspeaker leads.
16. Install knobs and chassis mounting screws.

REMOVAL OF CHASSIS FROM CABINET:

1. Remove knobs and cabinet back.
2. Disconnect speaker leads, picture anode lead, yoke connection and picture tube socket.
3. Remove chassis mounting screws.

NOISE CANCELLER CIRCUIT

The noise canceller circuit improves the sync stability in the presence of severe noise. The noise is prevented from entering the sweep circuit where it would prematurely trigger the sweep circuits with consequent loss of synchronization.

The negative going sync is fed into the grid of the sync amplifier V11A, ½ 6SL7. Figure 6 shows a noise burst superimposed on the sync pulses. The pulses are amplified and appear as positive going pulses across the plate resistor R352. At the same time a composite sync with noise burst is fed over C315 into the cathode of the noise canceller V12A, ½ 6AQ7. This tube is controlled by two bias controls. An automatic bias is provided by the AGC fed to the grid, and a manual bias is provided by the Picture Stabilizer control, R341 connected to the cathode. The noise canceller tube is biased so that it starts to conduct only when noise signals higher than the sync level occur. This tube is shunted across the sync amplifier tube V11A, so that at the moment the noise canceller conducts, it virtually short circuits the sync amplifier output preventing any noise from passing along to the clipper. The negative noise burst from the noise canceller tube will not only cancel out the initial noise burst, but will "bite" even down into the video information, so that no sync pulse is left. When a noise burst whose time duration exceeds that of several horizontal lines occurs, several sync pulses may be wiped out and no sync information at all is passed to the clipper. During this time interval synchronization will not be lost because of the inherent inertia or "fly-wheel" effect of the sweep generators. The AGC does not suffice to bias off the noise canceller tube over a wide range of input signals. Therefore the Picture Stabilizer control, R341, provides a manual bias adjustment to permit a wide range of noise cancellation for changing levels of input signal.

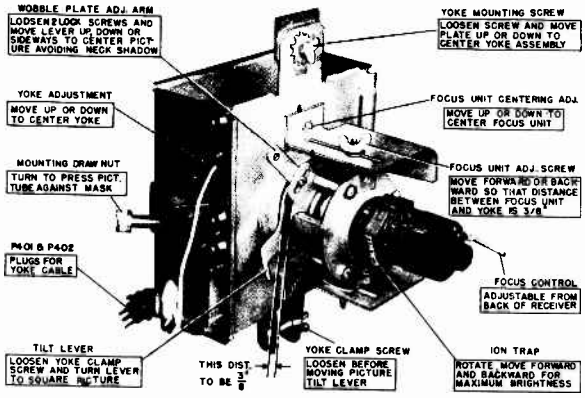

Early Production

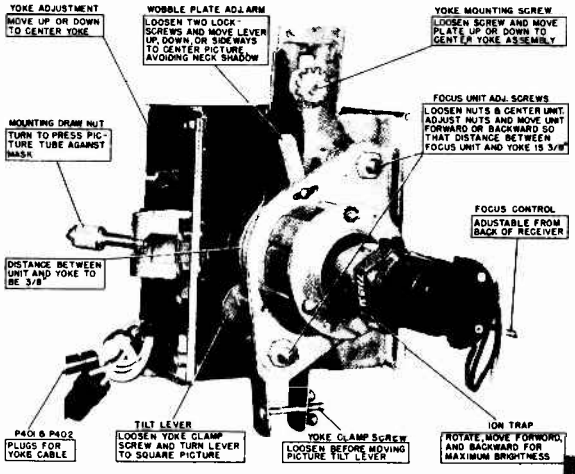

Late Production

Fig. 3. Picture Tube Adjustments

General Electric Models 20T2, 20C105, 20C106, 21C200, 21T4, 21T5, continued.

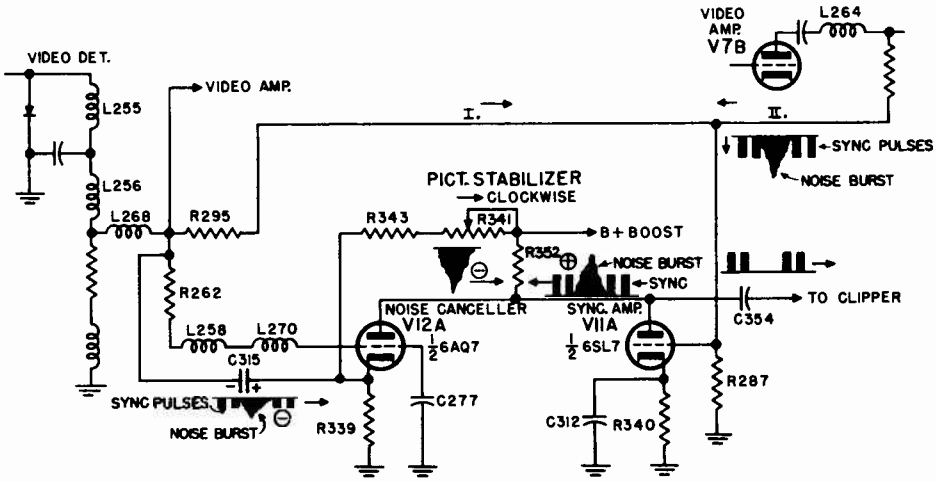

Fig. 6. Noise Canceller Circuit

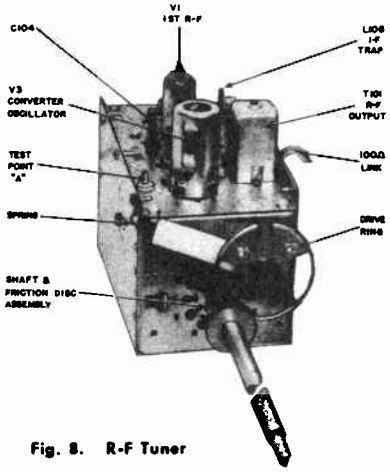

Fig. 8. R-F Tuner

VOLTAGE SENSITIVE "GLOBAR" RESISTOR

The resistor R382 on the screen of the horizontal output tube, V14, is a voltage sensitive type. When the resistor is measured with an ohmmeter its resistance may be a few megohms. However this reading is meaningless because as soon as a voltage is applied across the resistance, its resistance value decreases instantly. The change of resistance is not brought about by heating but is due to an applied voltage.

Because of the negative resistance characteristic it is not easy to determine whether a resistor is defective. Its resistance under operating conditions may be computed by measuring its voltage drop and then applying Ohm's law to determine the resistance value. The voltage drop across the resistor R382 under normal operation conditions is 140 volts.

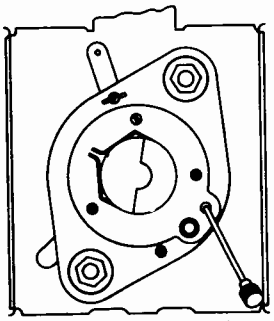

PM FOCUS UNIT (LATE PRODUCTION)

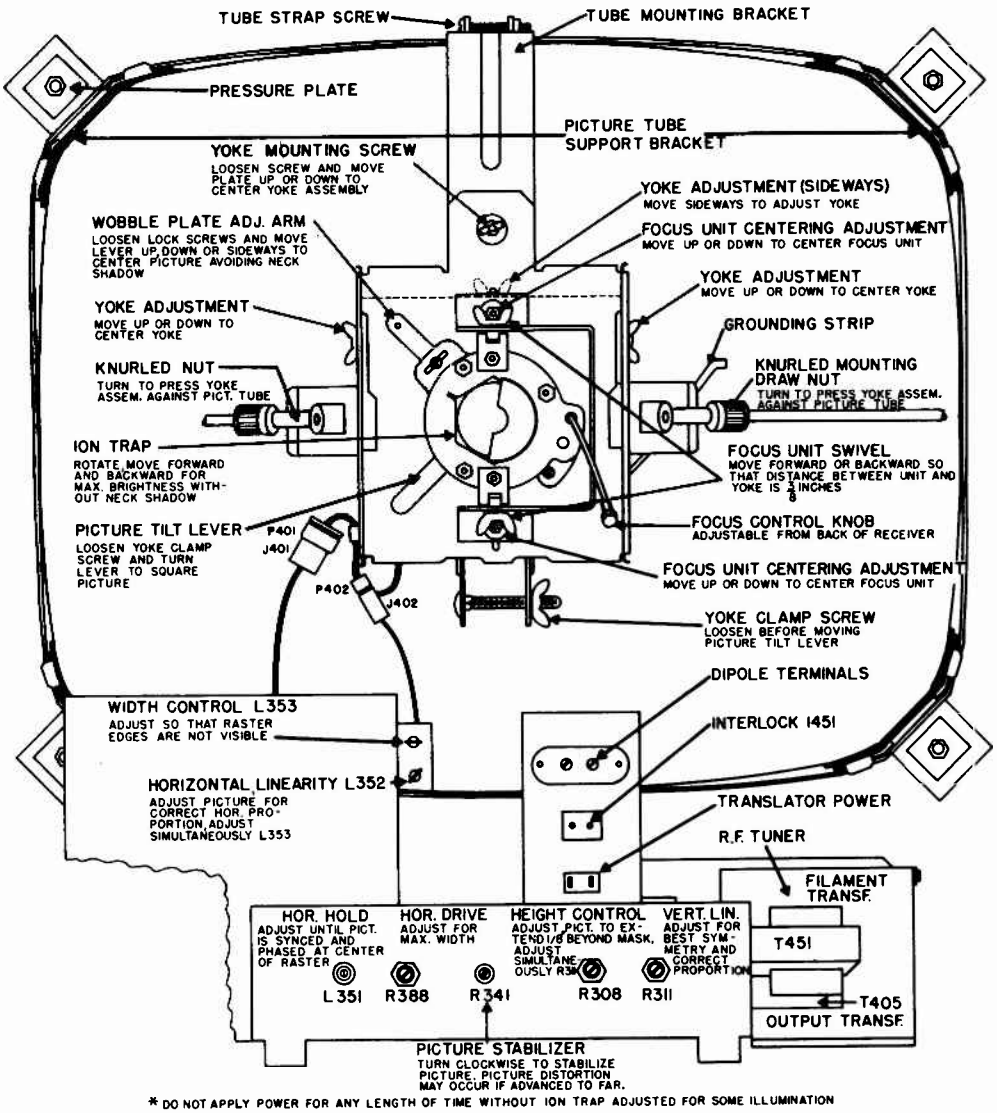

Fig. 4. Preset Controls and Picture Tube Adjustments (PM Unit Early Prod.)

General Electric Models 20T2, 20C105, 20C106, 21C200, 21T4, 21T5, continued.

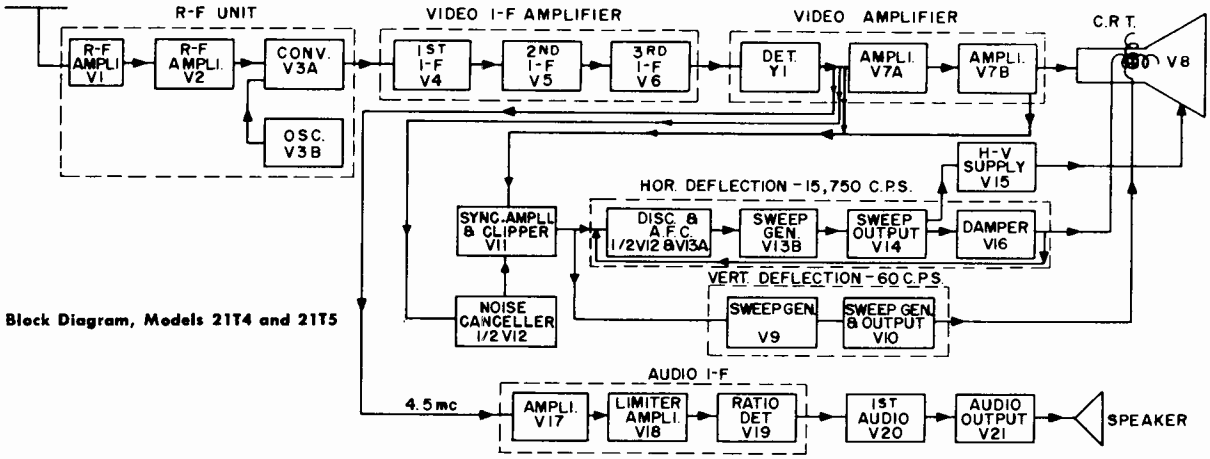

Fig. 5. Block Diagram, Models 21T4 and 21T5

RECEIVER ALIGNMENT

Make sure to read all notes before aligning your receiver. The alignment procedure described follows the sweep method.

When using the G-E sweep equipment, the G-E ST-8A balanced adapter should be used to obtain a balanced 300-ohm output for R-F tuner alignment. The balanced adapter should be connected to the R-F tuner unit through approximately 3 feet of 300-ohms transmission line and a resistor pad, as shown in Figure 16-A located at the R-F tuner input connections. Connections to the sweep generator are shown in Figure 13. When using other test equipment of the unbalanced output type for alignment of the R-F tuner unit, a pad as shown in Figure 16-B should be used instead. For purposes of Receiver I-F system alignment, a balanced sweep output is not required. However, the sweep output cable should be properly terminated. In the case of G-E sweep equipment, an unbalanced cable with its terminating attenuator is provided and connected to the sweep generator as shown in Figure 14. In cases where other sweep equipment is used for I-F alignment the output cable and an associated terminating resistor (50–70 ohms) should be used.

Use an accurately calibrated marker generator (G-E ST5A or equivalent) to supply picture and sound carrier markers. If other equipment such as a conventional signal generator is used to supply these markers, its output should be loosely coupled to the sweep generator output terminals and the marker output amplitude must be kept as low as possible to prevent distortion of the sweep waveform.

Consult the accompanying alignment charts for proper connection of the sweep equipment to the required points in the receiver for proper alignment.

It is often advisable to perform the alignment with the picture tube removed. The filament circuit can be completed by using a type 6SN7 tube with all pins clipped off except pins No. 7 and No. 8 which must be plugged with No. 1 and No. 12 of the picture tube socket.

TEST EQUIPMENT

The following test equipment is necessary in order to effect alignment of the tuned circuits of the receiver:

1. R-F SWEEP GENERATOR

(G-E Type ST-4A or Equivalent)

a. Frequency requirements:
4.5 MC with 500 KC and 2 MC sweep width.
40–50 MC with approximately 10 MC sweep width.
50–90 MC, 170–220 MC with 15 MC sweep width.
b. Constant output in the sweep range.
c. Minimum output 0.1 volt.

2. MARKER GENERATOR

(G-E Type ST-5A or Equivalent)

The marker generator must have good frequency stability, accurate calibration and must cover the following frequencies:

a. 41.25 MC for video IF
42.50 MC for video IF
44.20 MC for video IF
44.50 MC for video IF
45.00 MC for video IF
45.75 MC for video IF
47.25 MC for video IF

b. 4.5 MC for sound IF and trap alignment.

c. Picture and sound carrier frequencies for Channel No. 2 through No. 13.

3. BALANCED OUTPUT ADAPTER

(G-E ST 8A or Evuivalent)

See R-F Alignment, note 1.

4. OSCILLOSCOPE

The oscilloscope should have good sensitivity and preferably a 5-inch screen with a good wide-band frequency response on the vertical deflection circuits. Although the high frequency response is not necessary for alignment, it is imperative when making waveform measurements.

5. VACUUM TUBE VOLTMETER

A vacuum tube voltmeter (VTVM) is necessary to measure the bias of 3 volts required for video and RF alignment.

6. DETECTOR NETWORK

A crystal detector network as shown in Figure 25 is necessary when aligning the 4.5 mc trap, L260.

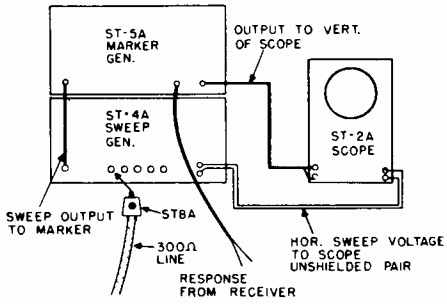

Fig. 13. R-F Alignment Equipment Connections

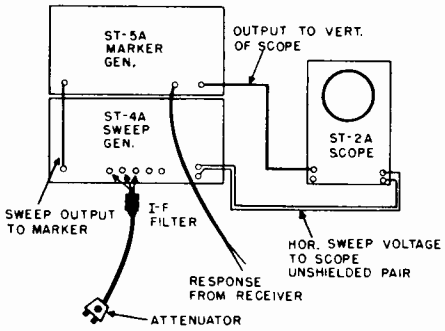

Fig. 14. I-F Alignment Equipment Connections

General Electric Models 20T2, 20C105, 20C106, 21C200, 21T4, 21T5, continued.

R-F TUNER ALIGNMENT

NOTES:

1. The R-F Tuner unit may be aligned without removing it from the main chassis. Disconnect the 300-ohm transmission line from the antenna terminals of the R-F tuner and connect the sweep generator as described in the General paragraph.

2. Connect a bias battery to the junction of C284 and R288 and picture control. Connect the positive lead from the battery to the main chassis. Adjust the picture control to give a −3 volt bias measured from the AGC lead to chassis.

For purpose of R-F Alignment, the B+ voltage to the oscillator tube V3A must be removed. Referring to the Figures 28 and 35, note that the oscillator B+ wire is connected to the third lug from the right on the terminal board.

3. The inductance of the coils are adjusted by brass screws with the exception of L111, L118 and L126 which are adjusted for proper tracking by inserting a knife blade between the windings. Adjust C104, C105, C106 and C108 for maximum gain and proper bandwidth of 4.5 mc across the top of curve on Channel No. 13, Fig. 19-A. Coil L122, may be dressed to aid in the tracking of the high channels. C105 controls the bandwidth and C104, C106 and C108 bring the circuits into resonance.

4. With the channel switch on No. 6, tune L112, L114, L119 and L127 for maximum gain, optimum curve flatness and 4.5 mc bandwidth (Figure 19-B).

5. In Channel No. 5 coils L111, L118 and L126, may have their inductance adjusted for proper tracking by inserting a knife blade between the windings. On Channel No. 4, coils L110, L117 and L125 may be "Knifed" to obtain good tracking. On Channel No. 6, coils L112, L119 and L127 tune the circuit to resonance and coil L114 controls the bandwidth.

6. With the channel switch on No. 3, adjust coils L109, L116 and L124 for maximum gain and optimum curve flatness. (Figure 19-B.)

7. Check tracking on Channel No. 2 and "Knife" coils L108, L115 and L123, to obtain good tracking.

8. On all channels the picture and sound carrier marker should not be less than 75% of the peak of the r.f. response curve. If two minimum values occur the curve will look like Figure 19-C. When the sound carrier is 25% down the curve we obtain curve of Figure 19-E; when the picture carrier is 25% down we obtain curve of Figure 19-F. For the low channels we may obtain a limit curve like Figure 19-D.

9. Seal trimmer screw of C105 and the slugs in the coils L114, L112, L109, L119, L116, L127, and L124 with wax to prevent detuning. Seal the tuning screws in trimmers C104, C106 and C108 with glue. Reconnect all leads to the R-F tuner for normal operation.

OVER-ALL (RF-IF) ALIGNMENT CHECK

As an over-all alignment check after the I-F has been aligned follow the given procedure:

a. Connect R-F sweep to the antenna terminals.
b. Inject a 45 mc marker into the video I-F.
c. The fine tuning control is set to place the picture carrier at 30% and the audio carrier between 5-8% as shown in figure 18.

In case an additional generator to provide the 45 mc marker is not available, obtain the final I-F curve of Fig. 21E as in step 5 of the video I-F alignment and check the percentage of the distance between the 45 mc marker and the peak of the curve (between 40 and 60%). Adjust the curve so that 100% is represented by 2" on the scope and the value of the rise is readily determined. Then adjust the R-F curve to the same height. Because 2" represents 100%, it is easy to determine the 30% point for the picture carrier and the 5-8% point of the sound carrier.

d. If the curve does not agree with the limits the following adjustments should be made to bring the audio carrier within limits:
   I. On high channels adjust C108; caution do not move the adjustment screw more than 3 full turns in either direction.
   II. On channel No. 4, 5 and 6 adjust L127.
   III. On channel No. 2 and 3 adjust L124.

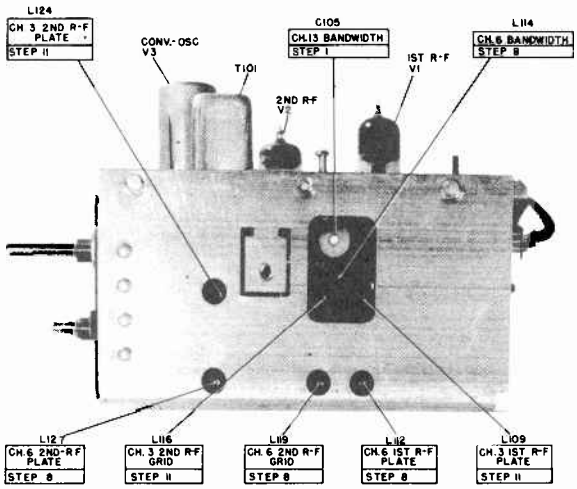

Fig. 15. R-F Tuner (Side View)

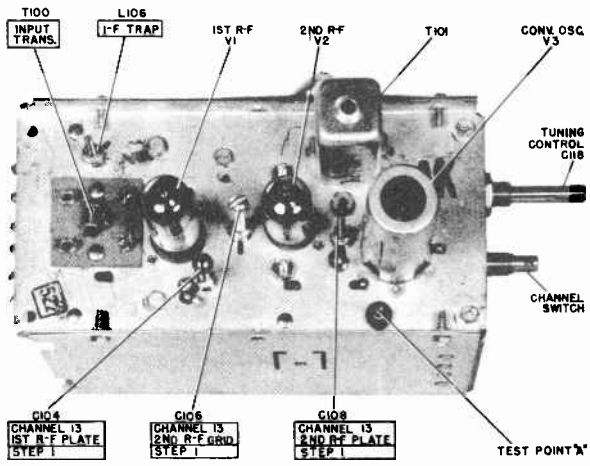

Fig. 17. R-F Tuner (Top View)

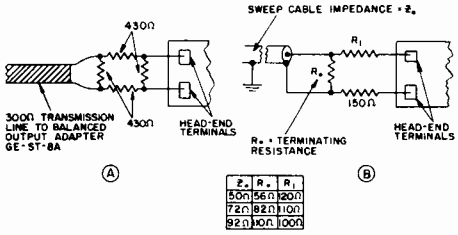

Fig. 16. Sweep Generator Termination

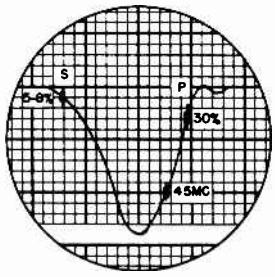

Fig. 18. Over-all Curve

General Electric Models 20T2, 20C105, 20C106, 21C200, 21T4, 21T5, continued.

R-F ALIGNMENT CHART

Sweep Generator Sweep Width 10-15 MC

Step No.	Receiver and Marker Position	Marker Generator Frequency	Signal Input Point	Observe Response Curve at	Adjust	See Note
1	No. 13	211.25 MC, 215.75 MC	Antenna terminals at head-end (see Note 1)	Test point "A" thru 10K-resistor and head-end chassis.	C104, C105, C106 and C108 for maximum gain and proper bandwidth. See Fig. 19-A.	1, 2, 3
2	No. 12	205.25 MC, 209.75 MC			No adjustment. Check tracking and adjust L122 if necessary.	3
3	No. 11	199.25 MC, 203.75 MC				
4	No. 10	193.25 MC, 197.75 MC				
5	No. 9	187.25 MC, 197.75 MC				
6	No. 8	181.25 MC, 185.75 MC				
7	No. 7	175.25 MC, 179.75 MC				
8	No. 6	83.25 MC, 87.75 MC			L112, L114, L119 and L127 for maximum gain, optimum curve flatness and proper bandwidth. See Fig. 19-B.	1, 2, 4
9	No. 5	77.25 MC, 81.75 MC			No adjustments. Check tracking, see Note 5.	5
10	No. 4	67.25 MC, 71.75 MC				
11	No. 3	61.25 MC, 65.75 MC			L109, L116 and L124 for maximum gain and optimum curve flatness. See Fig. 19-B.	1, 2, 6
12	No. 2	55.25 MC, 59.75 MC			No adjustment. Check tracking, see Note 7.	7

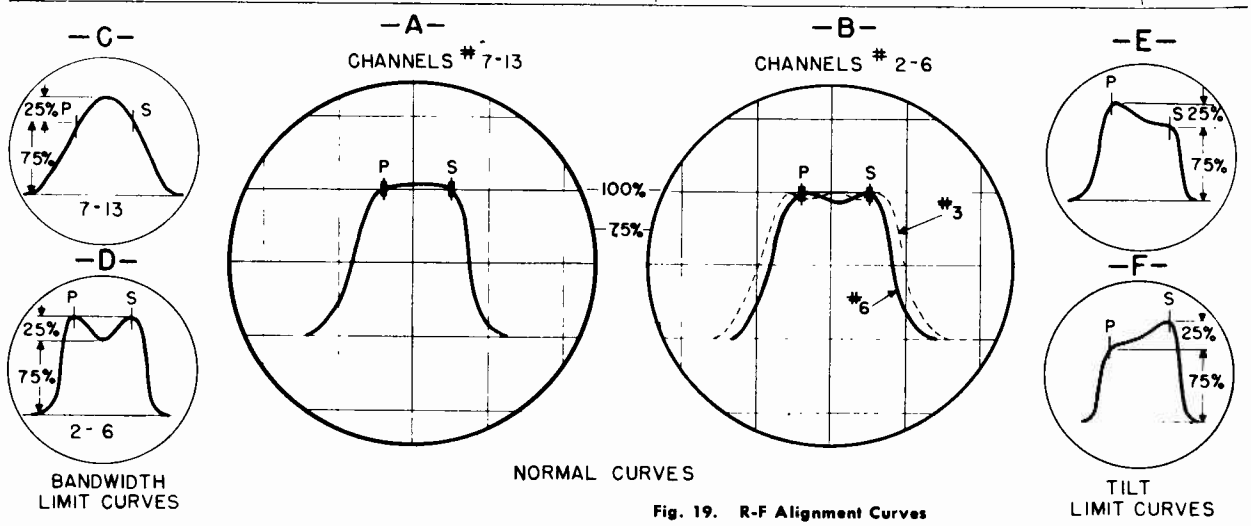

Fig. 19. R-F Alignment Curves

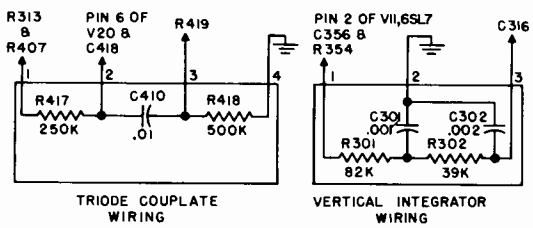

Fig. 32. Wiring Diagram for Ceramic Couplate

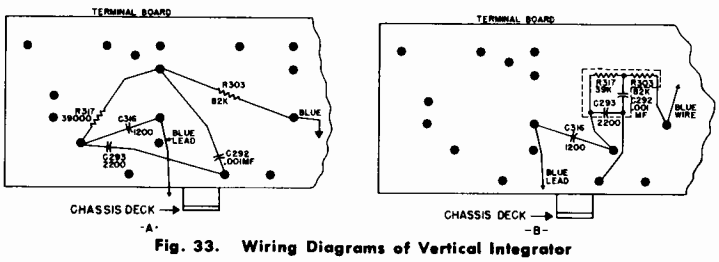

Fig. 33. Wiring Diagrams of Vertical Integrator

General Electric Models 20T2, 20C105, 20C106, 21C200, 21T4, 21T5, continued.

OSCILLATOR ALIGNMENT

GENERAL—Two methods of oscillator frequency adjustment are given below. The first method uses a transmitting station for the adjustment while the second method uses a sweep generator to align the oscillator coils.

A. "On Station Signal" Alignment

R-F and video I-F alignment must be correct before attempting oscillator alignment. An operating transmitting station is needed for each one of the coils being adjusted. Tune in the station starting with the higher channels and adjust the tuning screws for all available stations so that with the fine tuning control in the full clockwise position, audio is just visible in the picture. Then, check to see that best picture response on all channels takes place approximately in the center of the oscillator tuning range.

B. Sweep Alignment

1. R-F and video I-F must be properly aligned before aligning the oscillator.

2. Connect a bias battery from the junction of C284 and R288 and the picture control with the positive terminal to chassis and adjust for −3 volt bias at pin 1 of V4.

3. Disconnect the 300-ohm transmission line from the antenna terminals to the R-F terminals and connect the sweep generator to the R-F tuner terminals as described in the General paragraph on page 13.

4. Set the fine tuning knob 180° (½ turn) from the counterclockwise limit of its rotation, i.e. rotate the fine tuning knob counterclockwise to the end of its travel, then turn the fine tuning control knob 180° (½ turn) clockwise. This setting of the fine tuning control should be maintained for all oscillator adjustments.

5. Make the indicated adjustments so that the picture carrier marker for the channel falls at 50% on the high frequency side of the response curve.

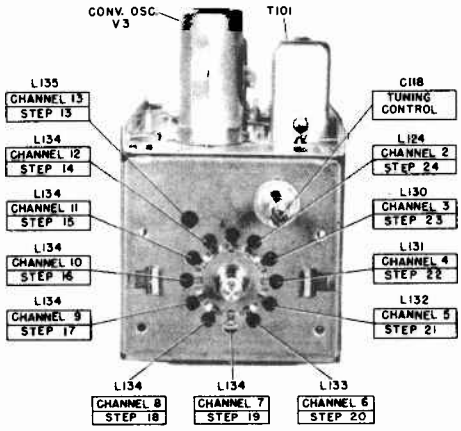

Fig. 20. Oscillator Adjustments

OSCILLATOR ALIGNMENT CHART

Sweep Generator Sweep Width 10-15 MC

Step No.	Receiver and Marker Position	Marker Generator Frequency	Signal Input Point	Observe Response Curve at	Adjust	See Note
13	No. 13	211.25 MC	Antenna terminals (see Note 2)	Junction of L256, R265, C268 thru 10K ohms and chassis	L135 Channel No. 13 oscillator adjustment.	1, 2, 3, 4, 5
14	No. 12	205.25 MC			L134 Channel No. 12 oscillator adjustment.	
15	No. 11	199.25 MC			L134 Channel No. 11 oscillator adjustment.	
16	No. 10	193.25 MC			L134 Channel No. 10 oscillator adjustment.	
17	No. 9	187.25 MC			L134 Channel No. 9 oscillator adjustment.	
18	No. 8	181.25 MC			L134 Channel No. 8 oscillator adjustment.	
19	No. 7	175.25 MC			L134 Channel No. 7 oscillator adjustment.	
20	No. 6	83.25 MC			L133 Channel No. 6 oscillator adjustment.	
21	No. 5	77.25 MC			L132 Channel No. 5 oscillator adjustment.	
22	No. 4	67.25 MC			L131 Channel No. 4 oscillator adjustment.	
23	No. 3	61.25 MC			L130 Channel No. 3 oscillator adjustment.	
24	No. 2	55.25 MC			L129 Channel No. 2 oscillator adjustment.	

General Electric Models 20T2, 20C105, 20C106, 21C200, 21T4, 21T5, continued.

VIDEO I-F ALIGNMENT

NOTES:

1. Connect a bias battery from junction C284, R288 and R284 (picture control) to chassis. Adjust picture control to give a −3 volt bias at the grid, pin 1, of tube V4 measured with a VTVM; disconnect VTVM after this adjustment.

2. Set channel switch to channel #11 and turn fine tuning control to the counterclockwise stop.

3. The noise canceller V12 should be biased off during alignment by rotating the Picture Stabilizer at the rear of the receiver to the counterclockwise stop.

4. The sweep generator should be properly terminated in its characteristics impedance. Couple the signal to the point of input through the capacitor specified and adjust signal input to give a video response curve of ¾ volt as shown in Fig. 21-A.

5. The traps L265 and L267 must be tuned before aligning the video i-f amplifier for minimum amplitude at 47.25 mc; this adjustment should be made with high scope gain.

6. In most cases it is only necessary to perform an over-all alignment of the video i-f to obtain the final curve. L251 will adjust the marker 42.5 mc of the audio or low-frequency side of the response curve; coil L266 will adjust the marker 45.75 mc of the video or high-frequency side of the curve. T101 and L254 should be adjusted simultaneously to obtain maximum gain and flatness of the curve as in Fig. 21-D. Then L266 is readjusted to give curve Fig. 21-E; slight readjustment of the core of some other coils in the video i-f may be necessary to obtain this curve.

7. It is necessary to detune the i-f coils by shorting as noted in the alignment chart to prevent the coil preceding the signal input point from influencing the response curve.

8. The marker 41.25 mc should be 7% down with 45.00 mc marker at 100%. The 45.75 mc marker should vary between the limits 25% and 35%, and the 42.5 mc marker should vary between the limits 50% and 90%, while the peak of the curve should not vary more than 40-60% below the 100% line, see Fig. 21-E.

9. It is important that the cores of all coils, including traps, be tuned on the outside of their respective coils.

VIDEO I-F ALIGNMENT CHART

Step	Marker Generator Frequency	Sweep Generator Frequency	Signal Input Points Between	Observe Response Curve at	Adjust	See Note No.
1	47.25 MC	40 to 50 MC	Converter grid test point "A" thru 100 mmf. capacitor & head-end chassis.	Junction L256, R292 & L268 thru 10,000 ohms resistor and chassis	Cores of L265 and L267 for minimum output at 47.25 MC.	1, 2, 3, 4, 5, 9
2	42.50 MC 44.10 MC 45.75 MC		V6 grid (pin 1) thru .01 mf. cap. and chassis; short L266.		Core of L254, 3rd i-f for curve of Fig. 21-A.	1, 2, 3, 4, 7, 9
3	41.25 MC 42.50 MC 45.00 MC 45.75 MC		V5 grid (pin 1) thru .01 mf. cap. and chassis, short L251 and remove short on L266.		Core of L266, 2nd i-f for curve of Fig. 21-B.	1, 2, 3, 4, 7, 9
4	41.25 MC 42.50 MC 45.00 MC 45.75 MC		V4 grid (pin 1) thru .01 mf. capacitor & chassis; remove short on L251.		Core of L251, 1st i-f for curve of Fig. 21-C.	1, 2, 3, 4, 7, 9
5	47.25 MC		Converter grid test point "A" thru 100 mmf. cap. & head-end chassis.		Core of T201, T101 and L254 for curve 21-E.	1, 2, 3, 4, 7, 8, 9

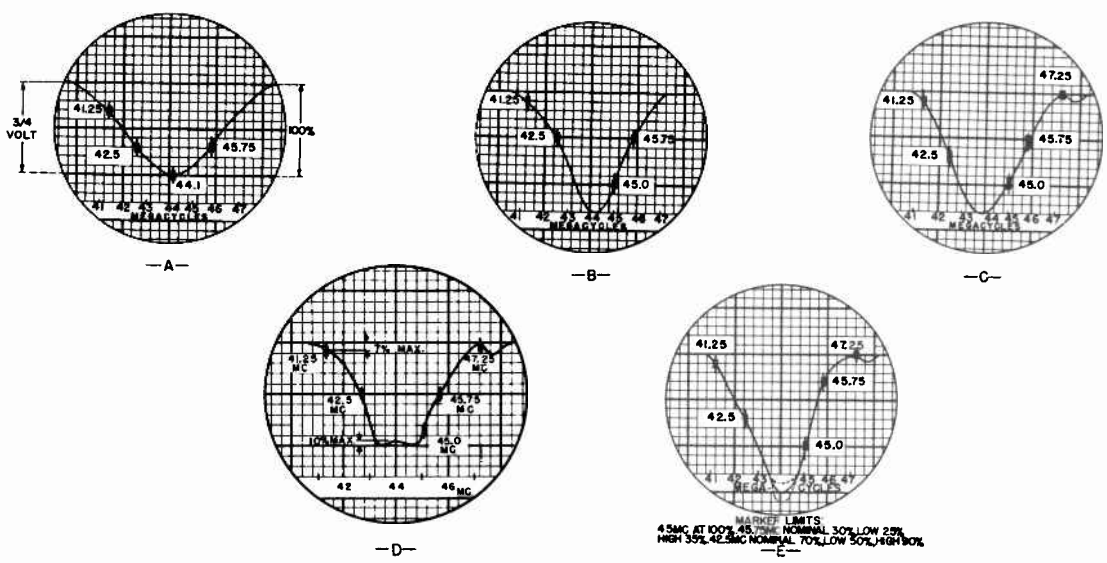

Fig. 21. Video I-F Curves

General Electric Models 20T2, 20C105, 20C106, 21C200, 21T4, 21T5, continued.

AUDIO I-F ALIGNMENT

1. Feed a 4.5 mc signal with a 500 kc sweep and adjust for proper response curve as indicated in the chart.

2. Transformer T401 is adjusted for maximum amplitude and symmetry of the response curve about 4.5 mc marker (Figure 23-A).

3. The secondary of T402 is adjusted for curve, Figure 23-B. This adjustment should give as straight a slope as possible between the positive and negative peaks with the center of the 4.5 mc marker falling midway between the peaks.

4. The primary of T402 is adjusted for maximum of the positive and negative peaks. If necessary, readjust the secondary of T402 so that the marker falls midway between the peaks.

5. Keep the input signal of the sweep generator low enough so that limiting does not take place, otherwise the response curve will broaden out, preventing correct adjustment. Check by increasing the output generator: the response curve should increase in amplitude.

6. As a final check (step 5), readjust the secondary of T402 for minimum buzz on all available stations.

7. An alternate method to the visual alignment is the sound output method using an operating television station, preferably when transmitting tone modulation during test pattern transmission.

a. Tune the receiver for best detail.

b. Set the picture control to give reduced contrast or by using a resistor pad in the antenna circuit.

c. Adjust transformer T401 and primary of T402 for maximum sound output.

d. Adjust the secondary of T402 for best quality audio reception and for minimum buzz in the output.

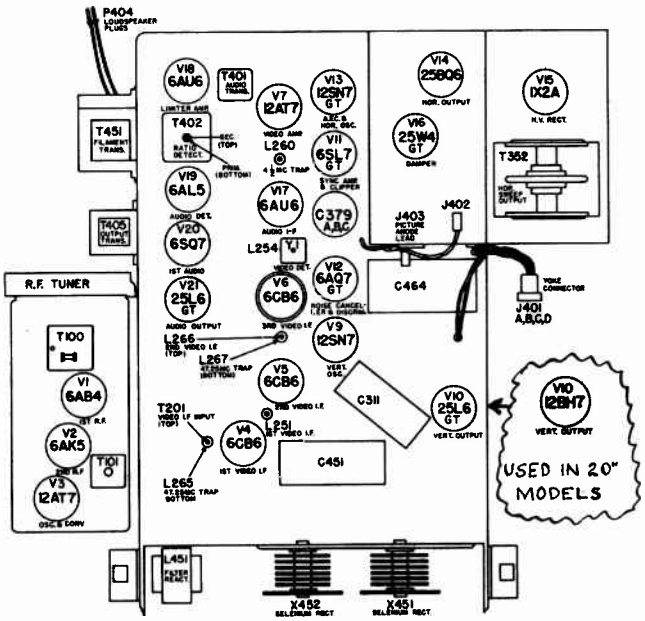

Fig. 22. Tube and Trimmer Location

AUDIO I-F ALIGNMENT CHART

Step No.	Marker Generator Frequency	Sweep Generator Frequency	Signal Input Points Between	Observe Response Curve at	Adjust	See Note No.
1	4.5 MC	4.5 MC ±500 KC, Keep signal below limiting level of receiver.	Pin 1 of V17 thru .01 mfd. cap. and chassis.	Junction of R404, C404, and secondary of T401 thru 10K and chassis.	Primary and secondary of T401 for maximum amplitude and symmetry of curve. See Fig. 23-A.	1, 2
2			Pin 1 of V18 thru .01 mf. cap. and chassis.	Junction of R408, C411, and R411 thru 10K resistor and chassis.	Secondary of T402 to place zero beat of 4.5 mc marker and sweep at the cross-over of the curve and base line.	1, 3, 4, 5
3					Primary of T402 for equal amplitude of the positive and negative peaks with a straight line connecting these peaks. See Fig. 23-B.	
4					Secondary of T402 to place zero beat of 4.5 mc marker at cross-over point of curve and the base line. See Fig. 23-B.	
5	Recheck alignment of Step 4 on operating station as in Note 6.					

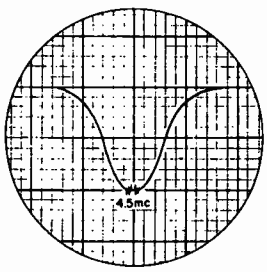

A

Fig. 23
Audio I-F Curves

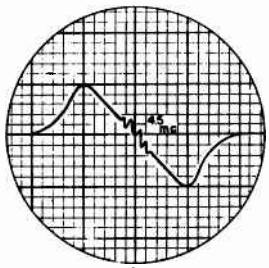

B

General Electric Models 20T2, 20C105, 20C106, 21C200, 21T4, 21T5, continued.

TRAP ADJUSTMENTS

ALIGNMENT OF L106 I-F TRAP (R-F TUNER)

The trap, L106, Figure 17, is for the purpose to remove any frequency in the i-f range which may cause interference and it should be aligned for minimum interference.

The trap, L106, may be aligned by tuning for minimum IF channel interference pattern on the screen.

If the interference frequency is known, L106 may also be aligned for minimum interference as outlined below.

1. Connect 3 volts bias from the A.G.C. line to chassis. Connect the positive of bias battery to chassis.

2. Use an accurate marker generator to furnish marker of the same frequency as the interfering frequency.

Connect the scope to view the response curve at output of the video detector.

Use a sweep generator with its center frequency set approximately at the interference frequency.

3. Do not tune L106 so it will attenuate Channel No. 2.

4. Use the GE-ST8A balanced adapter and a 3-foot piece of 300-ohm transmission line to couple the r.f. sweep to the antenna terminals of the receiver, to properly match the input impedance of this receiver.

If the shape of the response curve changes when you grasp the 300-ohm transmission line, a resistor pad, as shown in Figure 16-A, should be inserted at the head-end antenna terminals. In most cases as you grasp the 300-ohm transmission line the amplitude of the response curve will decrease, the shape will not change.

L106 ALIGNMENT CHART

Marker Frequency	Sweep Frequencies and Input Points	Observe Response Curve at	Channel Switch Setting	Adjust	See Note
Interference frequency	40 to 50 MC to antenna terminals	Junction R292, L256 and L268	2	Core of L106 for minimum amplitude of curve at marker.	1, 2, 3, 4

ADJUSTMENT OF VIDEO AMPLIFIER 4.5 MC TRAP (L260)

Notes:

This trap is used to remove 4.5 mc audio i-f from the video amplifier which shows up in the picture as a cross-hatch pattern. This trap will very rarely require adjustment. If adjustment is necessary, proceed as follows.

1. The trap (L260, C271) is adjusted for minimum amplitude of the 4.5 mc marker. Use a detector network as shown in Figure 25, connected from junction of L264 and C275 to chassis to detect the signal.

2. Adjust the Vertical Hold control to remove the vertical pulses from the response curve.

L260 ALIGNMENT CHART

Marker Generator Frequency	Sweep Generator Frequency	Signal Input Points Between	Signal Oscilloscope	Adjust	See Note No.
4.5 MC	4.5 MC ±1 MC	Junction L256, R292, L268 and Chassis thru .01 mfd.	Across 100K resistor as shown in Figure 25. See Note 1.	L260 for min. amplitude of 4.5 mc marker. Increase scope gain, Figure 24.	1, 2, 3

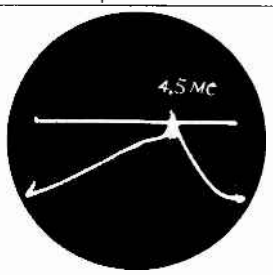

Fig. 24. 4.5 MC Trap Curve

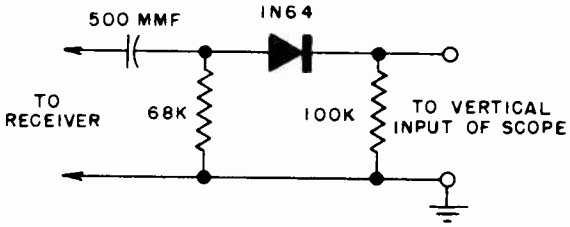

Fig. 25. Detector Network

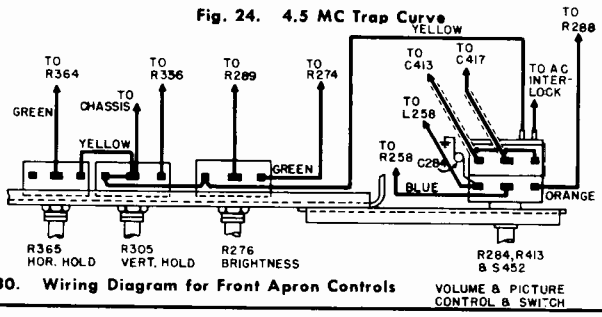

Fig. 30. Wiring Diagram for Front Apron Controls

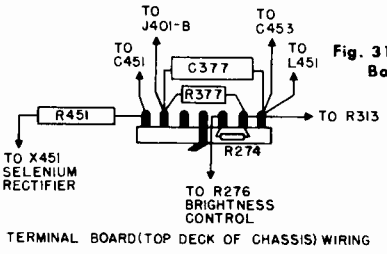

Fig. 31. Wiring Diagram of Terminal Board on Top Deck of Chassis

General Electric Models 21T4, 21T5 Circuit Diagram

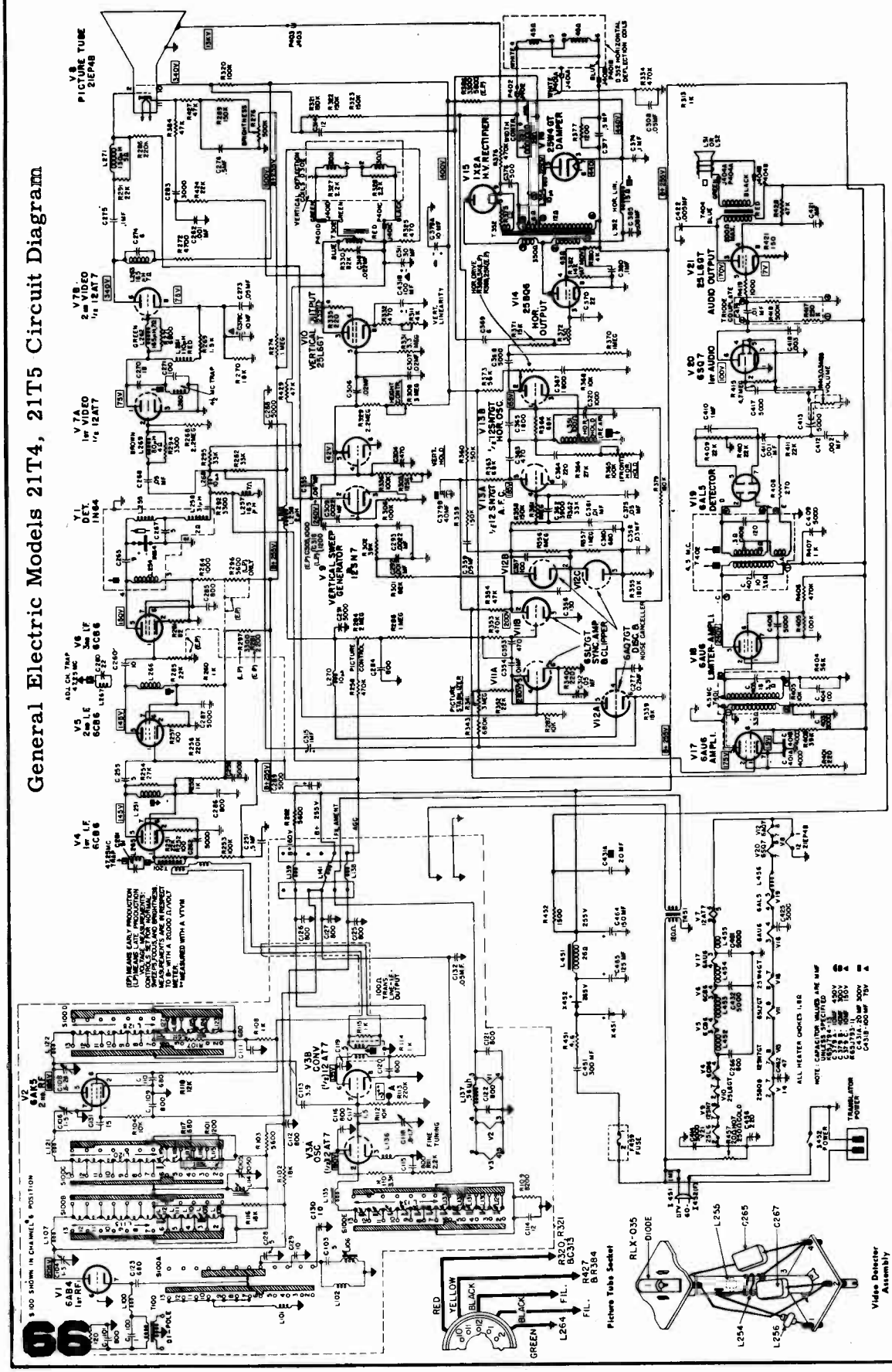

Fig. 35. Schematic Diagram, Models 21T4 and 21T5

PRODUCTION CHANGES

1. ***PROTECTION OF HORIZONTAL OUTPUT TUBE 25BQ6***

   In order to reduce the danger of overdriving the horizontal output tube, 25BQ6 the Horizontal Drive potentiometer was changed from a value of 25,000 ohms to 5000 ohms.

2. ***TO IMPROVE VERTICAL SYNC***

   In order to increase vertical sync tightness the capacitor C305, 1000 mmf in the grid circuit of the vertical sweep, V9, 12SN7 was changed to C316, 1200 mmf. Some receivers had a 220 mmf mica capacitor added to the 1000 mmf capacitor.

3. ***IMPROVEMENT OF VERTICAL SYNC STABILITY***

   In late production receivers the stability of the vertical sync was improved by disconnecting the AGC to the 3rd I-F tube, V6, 6CB6; the grid was connected to ground.

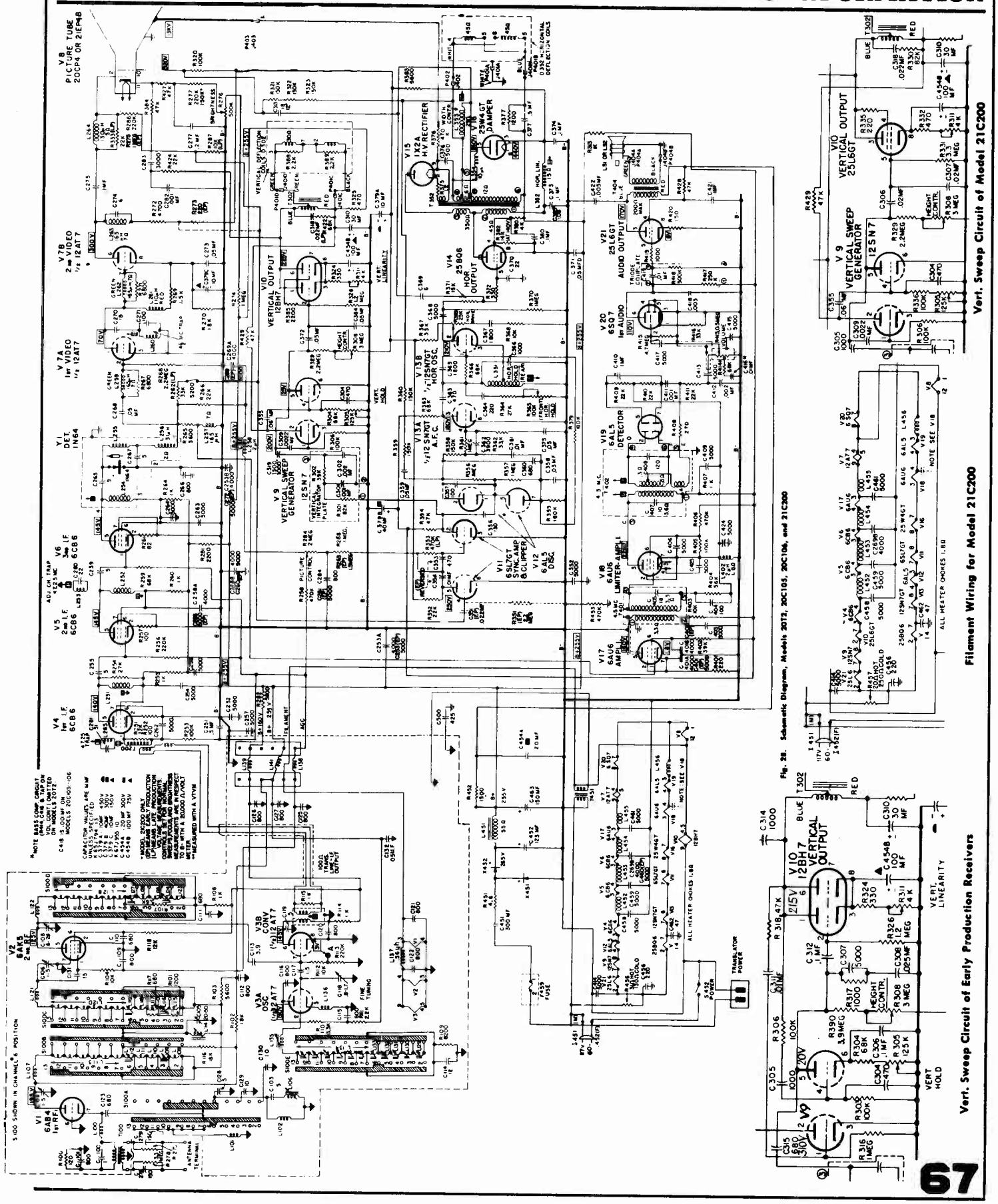

Fig. 28. Schematic Diagram, Models 20T2, 20C105, 20C106, and 21C200

General Electric Models 20T2, 20C105, 20C106, 21C200, 21T4, 21T5, continued.

SERVICE DIAGRAM

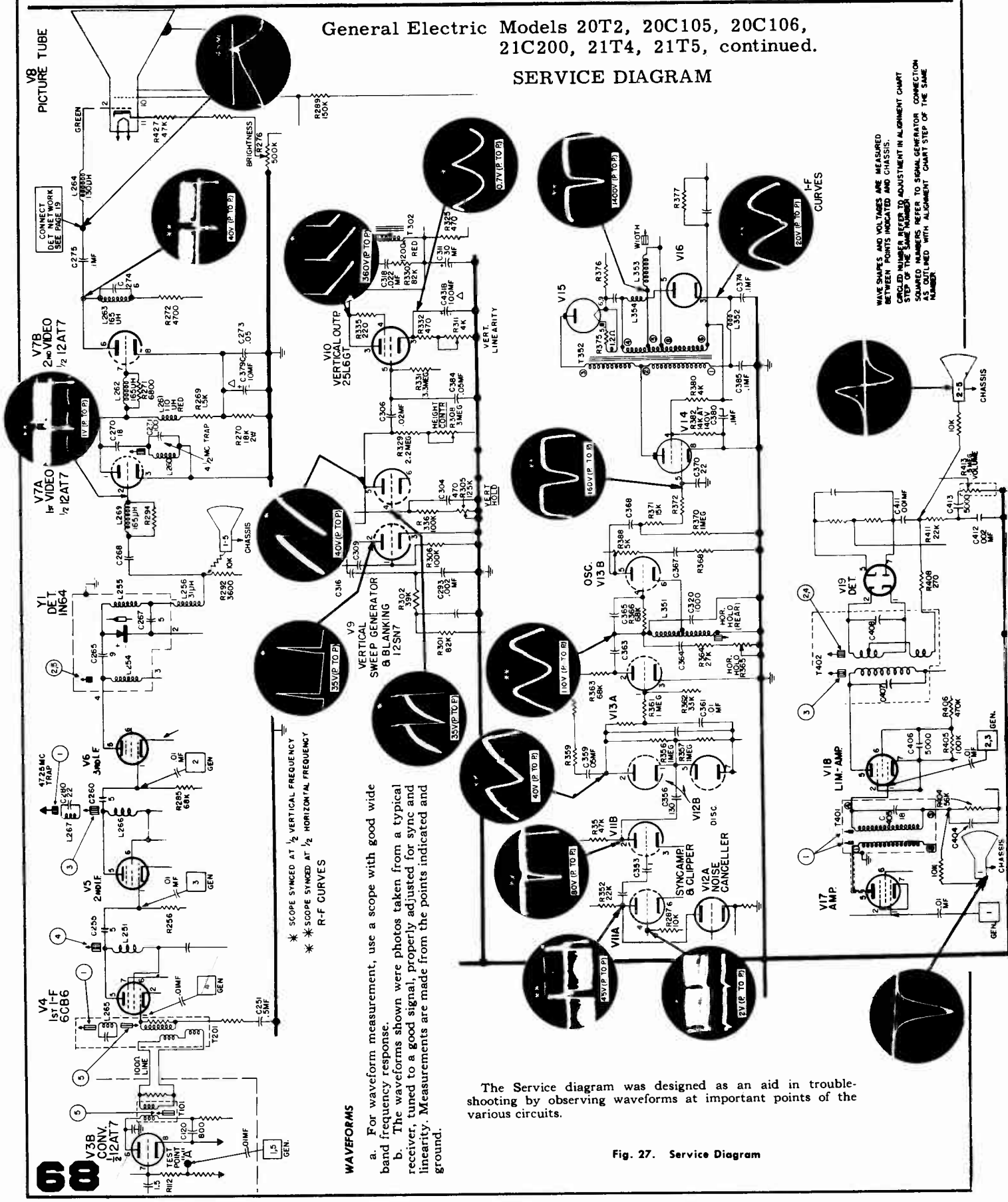

WAVEFORMS

a. For waveform measurement, use a scope with good wide band frequency response.

b. The waveforms shown were photos taken from a typical receiver, tuned to a good signal, properly adjusted for sync and linearity. Measurements are made from the points indicated and ground.

The Service diagram was designed as an aid in trouble-shooting by observing waveforms at important points of the various circuits.

Fig. 27. Service Diagram

General Electric Models 20T2, 20C105, 20C106, 21C200, 21T4, 21T5, continued.

TROUBLE SHOOTING

In most cases a trouble may be localized by observing the picture to test pattern and the presence or absence of sound.

In general, the tubes in defective circuits should be checked first since this check does not take much time and the probability of breakdown is higher in tubes than in components. When substituting tubes in the R-F or video I-F circuits, the original tube should be replaced in the socket if it is found in order. Always make sure that all tubes are making proper contact. In some cases it may be necessary to clean the tube pins to eliminate intermittances.

The waveform diagram (Figure 27) may be used to locate trouble. Alignment equipment may be used to isolate defective R-F, video I-F or audio I-F stages by checking for the response curve as given in the alignment procedure.

SYMPTOM	CHECK
DEFECTS OF THE R.F. AND I.F. CIRCUITS	
A. No Picture, No Sound, Raster Normal	1. The R-F Tuner circuits of tubes V1, 6AB4 and V2, 6AK5 2. That the oscillator V3B, 12AT7, is operating properly. 3. Video I.F. amplifier circuits of V4, V5 and V6, 6CB6 tubes. 4. Crystal detector, Y1, 1N64 inside 3rd I.F. can. 5. Channel switch, S100, A, B, C and D.
B. Snow in Picture	1. Capacitors C278 and C279 in antenna input circuit. 2. For defective antenna installation or transmission line. 3. Antenna orientation.
C. Lack of Picture Detail (Focus Satisfactory)	1. For misalignment of Video I-F amplifier. 2. For misalignment of R-F amplifier. 3. For mismatch of input impedances at antenna input terminals of receiver. 4. For overloading of R-F stages.
D. Motorboating or Flutter in Picture and Audio	1. For open by-pass capacitor C251 in AGC circuit. 2. For open filament by-pass capacitors C121 and C122. 3. For misalignment of video I-F and R-F amplifiers.
E. Wiggles in Picture Background Trailing Whites on Picture, Sound Normal	1. For misalignment of R-F and I-F amplifiers. 2. For improper tuning.
F. Sound Bars in Picture (Black Horiz. Bars)	1. For microphonic tubes: V3, 12AT7; V4, 6CB6; V7, 12AT7; V8, picture tube. 2. For misalignment of adjacent channel sound traps, L267 or L265.
DEFECTS OF THE VIDEO AMPLIFIER	
A. No Picture, Sound Satisfactory, Raster Satisfactory	1. For open video chokes L261, L263 and L264. 2. For shorted capacitors C270 or C273 in video amplifier. 3. For open coupling capacitor C268 in grid circuit of V7A. 4. For open resistors R269 and R272 in plate circuits of V7, 12AT7. 5. For short from pin 2 to 11 of picture tube, V8.
B. Poor Low Freqn. Response (Trailing Whites after Black)	1. For low value of R292, plate resistance R269 and R272 in V7, 12AT7 circuit. 2. For low capacity of the coupling capacitor C268 or C275.
C. Lack of Picture Detail (Focus Satisfactory) (Smearing of Vert. Wedges)	1. For shorted grid chokes L269 or L262 in V7, 12AT7 circuits; shorted V7A plate choke L261. 2. For open grid chokes L269 or L262 in V7, 12AT7 circuit. 3. For high resistance of grid resist. R292 in V7A circuit, or plate resistors R269 or R272 in V7, 12AT7 circuit.
D. Bright Picture with Black Lines	1. For shorted grid capacitor C275 in picture tube circuit; Picture control R284 will not work.
DEFECTS OF THE SYNC SECTION	
A. No Vertical Sync, Horizontal Sync Satisfactory	1. Waveform of sync input, pin 5 to V9, 12SN7. 2. For leakage of C292 and C293 in V9 input circuit. 3. For shorted resistors R301 and R302 in the integrator plate. 4. Resistors R336 and R305 and capacitor C304 in V9 circuit. 5. For leakage of coupling capacitor C309 on pin 1 of V9.
B. Weak Vert. Sync, Hor. Sync and Pict. Normal	1. For leakage or low value of cap. C316 in V9 plate circuit. 2. For leakage or incorrect value of cap. C292 and C293 in the integrator plate of V9 circuit. 3. For frequency determining components: C304, R336 and R305 in V9 grid circuit.
C. Weak or No Vert. & Hor. Sync, Picture Present and Sound Normal	1. Waveform at pin 4 of V11A, 6SL7. 2. For improper B+ voltages on V11, 6SL7. 3. For correct value of R354 in V11 plate circuit. 4. For defective coupling cap. C353 or C354 in V11 plate circuit.
D. Weak or No Horiz. Sync, Vert. Sync Satisfactory	1. Waveform at pin 2 of discriminator tube V12, 6AL5. 2. Sweep frequency determining components in the grid circuit (pin 1) of V13B, 12SN7: L351, R364, C364 and C320. 3. For leakage in the V12 circuit components: C356, C357, C358 and C360. 4. For proper value of resistors R356 and R357 in the discriminator circuit and of resistors R358 and R361 in the V13A grid circuit. 5. For capacitors C363 and C365 and R366 in V13A circuit.

General Electric Models 20T2, 20C105, 20C106, 21C200, 21T4, 21T5, continued.

TROUBLE SHOOTING CHART (Cont'd)

SYMPTOM	CHECK
DEFECTS OF THE VERTICAL SWEEP	
A. Keystoning (Picture Narrows at Right or left)	1. For defective vertical deflector coil, D302. 2. For resistor R327 and R328 parallel to deflection coil, D302.
B. No Vertical Deflection (Single White Hor. Line)	1. For open deflection coil, D302. 2. For defective sweep output transformer, T302. 3. For Vertical sweep generator tube V9, 12SN7 or output tube V10, 25L6GT defective no B+ to tube V10: open resistor R325 or shorted electrolytic capacitor C311.
C. Insufficient Height	1. For open electrolytic capacitor C311 in the plate circuit (pin 3) of vertical output tube V10, 25L6GT. 2. For high resistance of resistor R329 in the plate circuit (pin 5) of vertical gen. tube V9, 12SN7. 3. For excessive leakage of capacitor C307 in grid circuit of V10, 25L6GT. 4. For defective vertical sweep output transformer, T302. 5. For incorrect voltage values on V10, 25L6GT. 6. For low capacity of electr. cap C431B in cathode of V10; this also results in poor vert. linearity.
D. Poor Vertical Linearity, Size Normal	1. For leakage or improper value of electr. capacitor C431B. 2. For B+ to sweep output tube V10, 25L6GT. 3. For capacitor C316 in plate circuit (pin 5) of V9, 12SN7.
E. Poor Vertical Linearity, Insufficient Height	1. For defective vertical output tube V10, 25L6GT. 2. For inadequate drive voltage from tube V9, 12SN7; check waveform at pin 5 of V9. 3. For low plate voltage of V9 or V10. 4. For open or low capacity of electr. capacitor C311 in plate circuit V10.
F. Excessive Height, Sync Satisfactory	1. For low value of plate resistor R329 in plate circuit of V9, 12SN7. 2. For open or low capacity of cap. C307 in grid circuit of V10, 25L6GT. 3. For low picture tube anode voltage.
G. No Vertical Sync, Vert. Hold has no Effect, Insufficient Height	1. For shorted capacitor C304 in the grid circuit (Pin 4) of V9, 12SN7. 2. For shorted vertical hold control, R305.
H. Poor Vertical Lin., Fold-over at Bottom, Insufficient Height	1. For short or high leakage of C316 in plate circuit (pin 5) of tube V9, 12SN7.
I. Curtain Raising Effect (Picture rolls up from bottom as Vert. Hold is advanced)	1. For leaky capacitor, C304 in grid circuit (pin 4) of V9, 12SN7. 2. For low value of resistor R336 in the grid circuit (pin 4) of V9.
J. Poor Vertical Sync	1. For vertical output tube V10, 25LG-GT high secondary emission.
DEFECTS OF THE HORIZONTAL SWEEP	
A. Inadequate Sweep Width	1. For low B+ boost to plate of tube V15, 1X2-A or low B+ to screen of V14, 25BQ6. 2. For shorted turn of Width control, L353. 3. For shorted turns or arc-over in hor. sweep output transformer, T352. 4. For parasitic oscillations in circuit of V14, 25BQ6 (defective tube or open filament by-pass. C462)
B. Too Great Sweep Width	1. For Open Width control, L353. 2. For low value of picture tube anode voltage. 3. For voltages of horizontal output tube V14, 25BQ6.
C. Poor Horizontal Linearity	1. For short or shorted turns of Hor. Linearity contr., L352. 2. For leaky capacitor C370 in grid circuit of V14, 25BQ6. 3. For by-pass cap. C380 on screen of V14, 25BQ6. 4. For defective hor. sweep output transf., T352.
D. Black Beady Line or Lines (Barkhausen Osc.)	1. For Tube V14, 25BQ6.
E. Keystoning	1. For shorted turns of horizontal deflection coil, D352.
F. No Horizontal Sync, Bright Vert. Bars	1. For shorted, open or leaky capacitor C365 at pin 1 of V13B, 12SN7. 2. For shorted resistor R366, at pin 1 of V13B, 12SN7.
G. Gear-tooth Effect, Tearing of Picture	1. For open or low capacity of C375 at grid circuit of V13A, 12SN7. 2. For open or high resistance R362 at grid circuit of V13A.
H. Poor Hor. Lin., Bright Vert. Bars, Inadequate Width	1. For open or low capacity of C374 at the Hor. Linearity control L352.
I. Dim Pict., Poor Hor. Lin., Insuff. Width and Height	1. For open or low capacity of C377 at terminal board in circuit of T352

hallicrafters

SERIES 1200D TELEVISION CHASSIS WITH PREFIX LETTERS A, D, F, G, J, K, L, P, R, T, W & X

COMPARISON OF 1200 SERIES CHASSIS

The A1200D may be considered the basic chassis in the series 1200 chassis. The D, F, G, K, L, W and X1200D chassis are all based on the A1200D chassis with any one or more of the modifications shown on the following pages. See chart below for modifications used in any particular chassis.

COMPARISON CHART FOR 1200 SERIES

CHASSIS	PIX TUBE SIZE See Modification I	HEATER CIRCUIT See Modification IV	TUNER TYPE See Modification VII	MODIFICATIONS USED and/or NOTES FOR RUN 1
A1200D	17" glass	Series-parallel	1C1345 Pentode	Basic 1200 series chassis.
D1200D	20" glass	Series-parallel	1C1345 Pentode	I except step D & II
F1200D	17" glass	Transformer	1C1376 Cascode	II, III, IV, VI & VII
G1200D	20" glass	Transformer	1C1376 Cascode	I, II, IV, VI & VII On some chassis, R-181 is 270,000 ohms and R-194 value is 100,000 or 120,000 ohms.
J1200D	21" metal	Transformer	1E1380 Cascode	I, IV, VI, VIII, IX, X, XI
K1200D	17" glass	Transformer	1C1345 Pentode	IV & V
L1200D	20" glass	Transformer	1C1345 Pentode	I except step D, II, IV & V
P1200D	17" glass	Series-parallel	1C1345 Pentode	VI, IX & X
R1200D	21" metal or glass	Series-parallel	1C1345 Pentode	I, VI, VIII, IX & X
T1200D	21" metal	Transformer	1C1376 Cascode	I, IV, VI, VII, VIII, IX, X
W1200D	17" glass	Series-parallel	1C1345 Pentode	II & VI
X1200D	20" glass	Series-parallel	1C1345 Pentode	I, II & VI

Chassis A1300D used in Model 1075 is similar to T1200D.
For a complete list of models using each chassis see next page, over.

CHASSIS IDENTIFICATION

HALLICRAFTERS

CHASSIS NO.	MODELS CHASSIS MAY BE USED IN
A1200D, K1200D or W1200D	1010P, 1012P
D1200D, L1200D or X1200D	1021P, 1026P
F1200D	1013C
G1200D	1022C, 1027C
J1200D	1062C, 1063C
P1200D	1051P, 1052P
R1200D	1053P, 1054P
T1200D	1055C, 1056C, 1060C, 1061C

After determining which chassis is used in the set you are servicing, refer to comparison chart on previous page to find what changes if any apply to schematic diagram shown. Circuits for A1200D basic chassis and for T1200D with almost all modifications are shown.

COMPARISON OF 1200 SERIES CHASSIS (Cont.)

MODIFICATION I

LIST OF MODIFICATIONS

To change from a 17 inch to a 20 or 21 inch picture tube the following changes are made:

LOCATION OF CHANGE	CHANGE MADE
A. High side of Horizontal Hold control	82,000 ohms, ½ watt resistor (R-178) added.
B. Plate (pin 2) circuit of Horizontal Oscillator	220,000 ohms, ½ watt resistor (R-179) added.
C. Plate supply decoupling of Horizontal Oscillator (pin 2)	.1 mfd., 600 v. paper capacitor (C-162) added.
D. Plate supply decoupling of Horizontal Oscillator (pin 2)	120,000 ohms, ½ watt resistor (R-156) replaced by 180,000 ohms, ½ watt resistor (R-194).
E. Plate (pin 2) circuit of Horizontal Oscillator	4700 ohms, ½ watt resistor (R-157) replaced by 8200 ohms, ½ watt resistor (R-180).
F. Plate (pin 2) circuit of Horizontal Oscillator	470 mmf. silver mica capacitor (C-145) replaced by 390 mmf. silver mica capacitor (C-163).
G. Horizontal Output stage grid coupling	5000 mmf. disc ceramic capacitor (C-146) replaced by 560 mmf. silver mica capacitor (C-164).
H. Horizontal Output stage grid leak	330,000 ohms, ½ watt resistor (R-158) replaced by 390,000 ohms, ½ watt resistor (R-181).
I. Horizontal Output stage screw bypass	.047 mfd., 400 v. paper capacitor (C-165) added
J. Horizontal Output stage screen resistor	10,000 ohms, 2 watts resistor (R-182) added.
K. Horizontal Output stage output transformer	Horizontal output transformer T-106 (55D193) replaced by T-109 (55D197).
L. Servo Loop feedback from Horizontal Output to AGC tube	Two 150,000 ohms, 1 watt resistors (R-151 & R-152) series connected replaced by 33,000 ohms, 1 watt resistor (R-177).
M. Series capacitor in doubler power supply	140 mfd., 150 v. electrolytic capacitor (C-135) replaced by 200 mfd., 150 v. electrolytic capacitor (C-161).
N. Audio voltage amplifier cathode resistor	1500 ohms, ½ watt resistor (R-169) replaced by 1200 ohms, ½ watt resistor (R-176)
O. Speaker	Speaker with field coil resistance of 85 ohms replaced by speaker with field coil resistance of 61 ohms

HALLICRAFTERS

COMPARISON OF 1200 SERIES CHASSIS (Cont.)

MODIFICATION II

The 75 mmf., 500 V. ceramic capacitor (C-142) connected from plate pin 5 to ground of the Horizontal Oscillator, V-108, is replaced by a 100 mmf., 500 v. silver mica capacitor (C-170). Some chassis have neither C-142 or C-170. The 100 mmf. capacitor, C-170, is the preferred capacitor.

MODIFICATION III

The horizontal integrating network in the grid circuit (pin 4) of the Horizontal Oscillator is changed as follows:
A. 4.7 megohms, ½ watt resistor (R-149) is replaced by 470,000 ohms, ½ watt resistor (R-189).
B. .003 mfd., 400 v. paper capacitor (C-139) is replaced by .005 mfd., 400 v. paper capacitor (C-167).
C. .01 mfd., 400 v. paper capacitor (C-141) is replaced by .05 mfd., 400 v. paper capacitor (C-168).

MODIFICATION IV

To replace series parallel heater arrangement with a heater transformer the following changes are made:

LOCATION OF CHANGE	CHANGE MADE
A. Between power line and Damper heater pin 8	190 ohms cold/19 ohms hot, 5 watts negative temperature coefficient resistor (R-143) deleted.
B. Heater string shunt	80 ohms, 10 watts, 5% resistor (R-144) deleted.
C. Heater string shunt	42 ohms, 3 watts, 5% resistor (R-145) deleted.
D. Heater string choke	Air core r-f choke (L-113) deleted.
E. First I.F. Amplifier heater bypass	4000 mmf. dual disc ceramic capacitor (C-104) deleted.
F. Ratio Detector heater bypass	5000 mmf. disc ceramic capacitor (C-106) deleted.
G. Video Amplifier heater bypass	5000 mmf. disc ceramic capacitor (C-158) deleted.
H. 4.5 MC Amplifier heater bypass	5000 mmf. disc ceramic capacitor (C-159) deleted.
I. Heater transformer	Auto transformer T-110 (52C258) added.
J. Sync. Clipper V-105	12SN7GT tube replaced by 6SN7GT tube.
K. Horizontal Output V-109	25BQ6GT tube replaced by 6BQ6GT tube.
L. Audio Output V-115	25L6GT tube replaced by 6W6 tube.
M. Audio Output tube socket wiring	Cathode pin 8 connected directly to heater pin 7 to place both heater and cathode at the same potential.

MODIFICATION V

LOCATION OF CHANGE	CHANGE MADE
A. Integrating network in Vert. Osc. grid circuit	22,000 ohms, ½ watt resistor (R-133) replaced by 47,000 ohms, ½ watt resistor (R-183).
B. AGC divider network in Sync. Clip. plate circuit	3300 ohms, ½ watt resistor (R-132) replaced by 2200 ohms, ½ watt resistor (R-184).
C. Horizontal Oscillator cathode resistor	1200 ohms, ½ watt resistor (R-153) replaced by 1500 ohms, ½ watt resistor (R-185).
D. Horizontal Oscillator plate circuit (pin 2)	4700 ohms, ½ watt resistor (R-157) replaced by 8200 ohms, ½ watt resistor (R-180).
E. Horizontal Oscillator plate circuit (pin 2)	470 mmf. silver mica capacitor (C-145) replaced by 390 mmf. silver mica capacitor (C-163).

MODIFICATION VI

This modification is composed of MODIFICATION V plus the following changes:

LOCATION OF CHANGE	CHANGE MADE
A. Sync. Clipper plate circuit (pin 2)	680,000 ohms, ½ watt resistor (R-127) replaced by 1.2 megohms, ½ watt resistor (R-190).
B. Sync. Clipper grid leak (pin 4)	22,000 ohms, ½ watt resistor (R-130) replaced by 47,000 ohms, ½ watt resistor (R-191).
C. High side of Horizontal Hold control	82,000 ohms, ½ watt resistor (R-178) added.
D. Sync. Clipper plate (pin 5) circuit supply	10,000 ohms, 1 watt resistor (R-192) added.
E. Sync. clipper plate (pin 5) circuit supply	22,000 ohms, 1 watt resistor (R-193) added.
F. Sync. Clipper plate (pin 5) circuit supply	10 mfd., 150 v. electrolytic capacitor (C-169) added.
G. AGC Control Switch	Switch S-102 (60B500) replaced by S-103 (60B507).
H. AGC Control Switching	22,000 ohms, 1 watt resistor (R-188) added.

HALLICRAFTERS

COMPARISON OF 1200 SERIES CHASSIS (Cont.)

MODIFICATION VII

To use a 1C1376 Cascode tuner in place of the 1C1345 Pentode tuner the following changes are made:

A. The 1C1345 Pentode tuner is removed and replaced by the 1C1376 Cascode tuner. These two tuners do not have the same terminal connections. Refer to schematic diagram. The 1C1376 Cascode tuner may be used only with chassis which have a heater transformer.
B. A wire to supply 260 volts d-c is added between tuner terminal 4 of the Cascode tuner and the junction of R-120 (33,000 ohms, 1 watt, the video amplifier screen resistor) and the 260 volt "B" supply.

MODIFICATION VIII

Whenever the picture tube used has a metal cone which eliminates the high voltage filter capacitor built into tubes with an outer aquadag coating, C-166 (500 mmf. 20,000 volts) is required between pin 7 and ground of the 1B3GT high voltage rectifier.

MODIFICATION IX

A. A deeper chassis with a depth of 3 3/4" instead of 3" is used.
B. The tuner, three i-f amplifiers, video detector, video amplifier, 4.5 MC amplifier and the ratio detector are mounted on a separate sub-chassis.
C. Test socket SO-101 is deleted.
D. The 6C4 audio amplifier tube, V-144, is moved to a new location slightly forward and to one side of the vertical output transformer.

MODIFICATION X

The horizontal stabilizer coil L-108 (55B1536) is replaced by coil 51B1642 and its mounting plate 63A902. When coil 51B1642 is used for L-108, plate 63A902 must also be used and either C-142 (75 mmf.) or C-170 (100 mmf.) connected between pin 5 of the horizontal oscillator and ground is deleted. Coil 51B1642 is preferred. However, the 55B1536 coil will be found in some chassis. Use coil 51B1642 and plate 63A902 for replacement purposes.

MODIFICATION XI

To use a 1E1380 Cascode tuner in place of the 1C1345 Pentode tuner the following changes are made:

A. The 1C1345 Pentode tuner is removed and replaced by the 1C1380 Cascode tuner. The 1E1380 tuner does not have terminal lugs on the back. The wire leads from this tuner must be connected to the correct points in the chassis as shown in the schematic diagram. The 1E1380 tuner also requires a supply voltage of approximately 250 volts as shown in the schematic diagram. The 1E1380 tuner may be used only with 3 3/4" deep chassis which have a heater transformer.
B. Resistor R-101 (100,000 ohms, ½ watt) in the A.G.C. bus is not required.

Chassis Alignment Location for Chassis A, D, W & X1200D

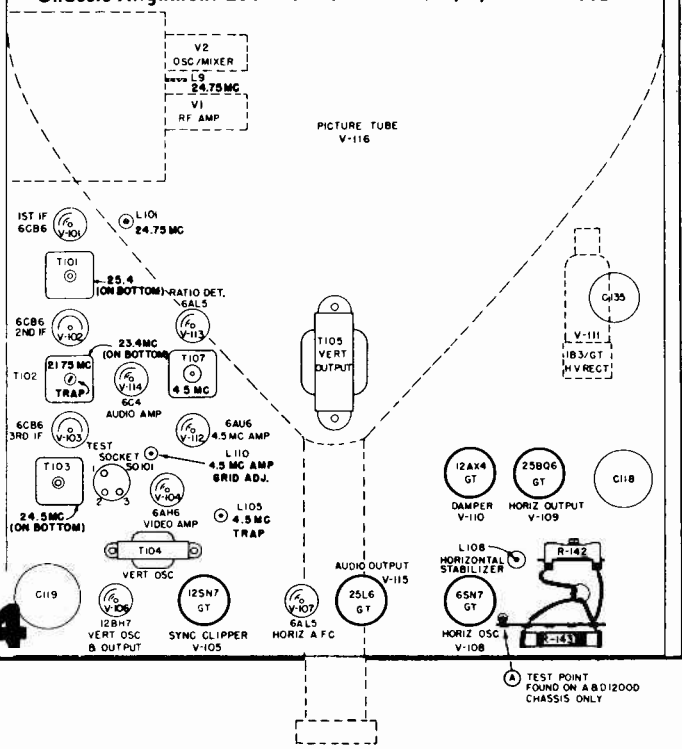

Top View Alignment Locations for Chassis J & T1200D

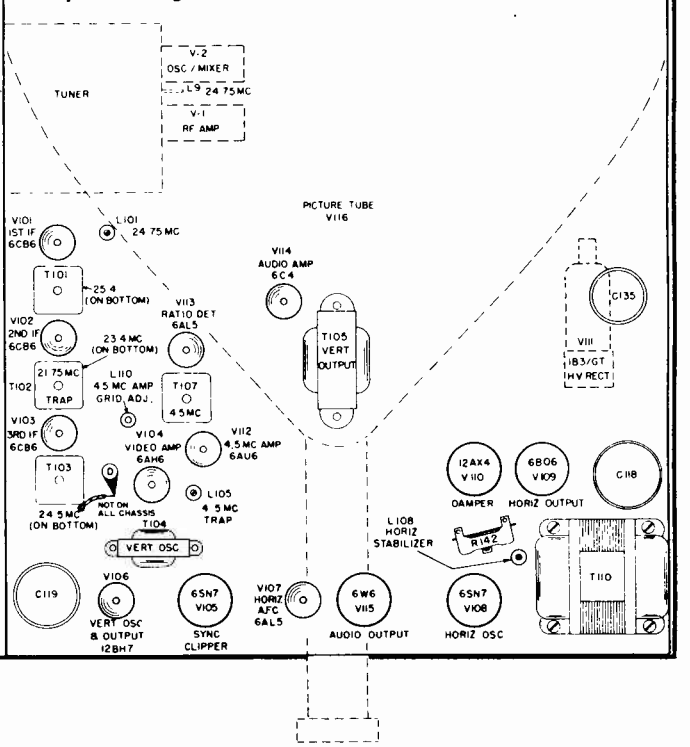

The Hallicrafters Co.
Chassis A1200D

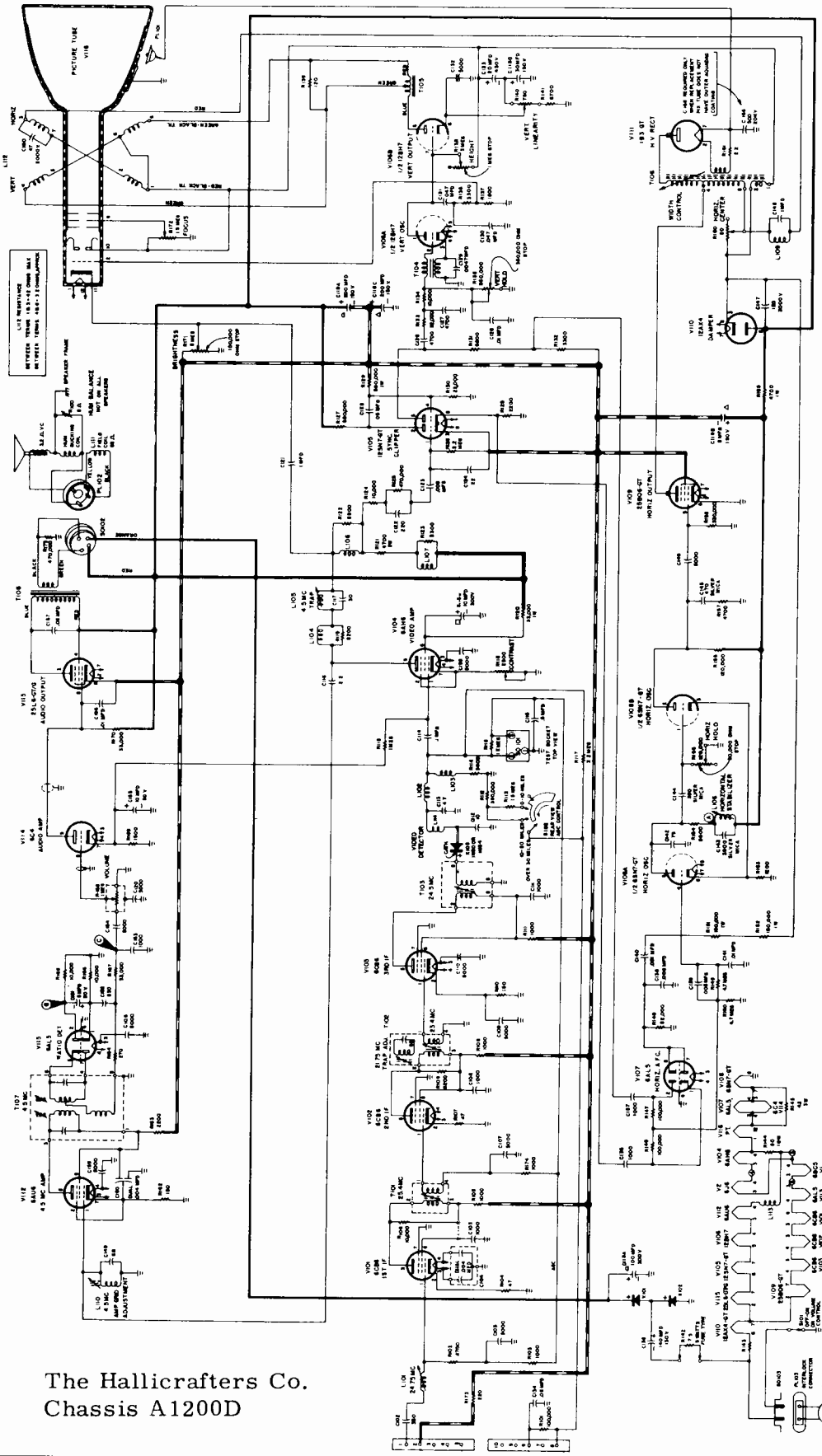

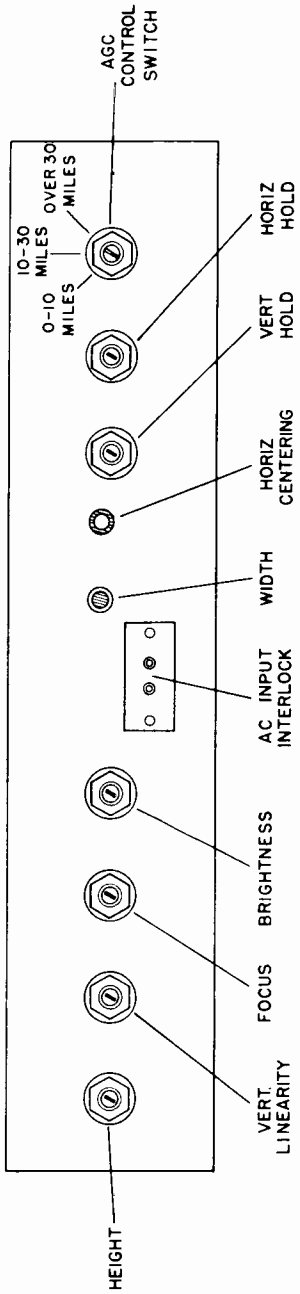

Rear Controls for Chassis A, D, F, G, K, L, P, R, W and X1200D

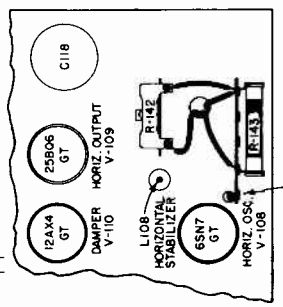

The Hallicrafters Co.
Chassis A1200D

Horizontal Oscillator Adjustment Point for Chassis with Series—Parallel Heaters

Hallicrafters 1C1345 Pentode Tuner used in 1200D Chassis with prefix A, D, K, L, P, R, W, X.

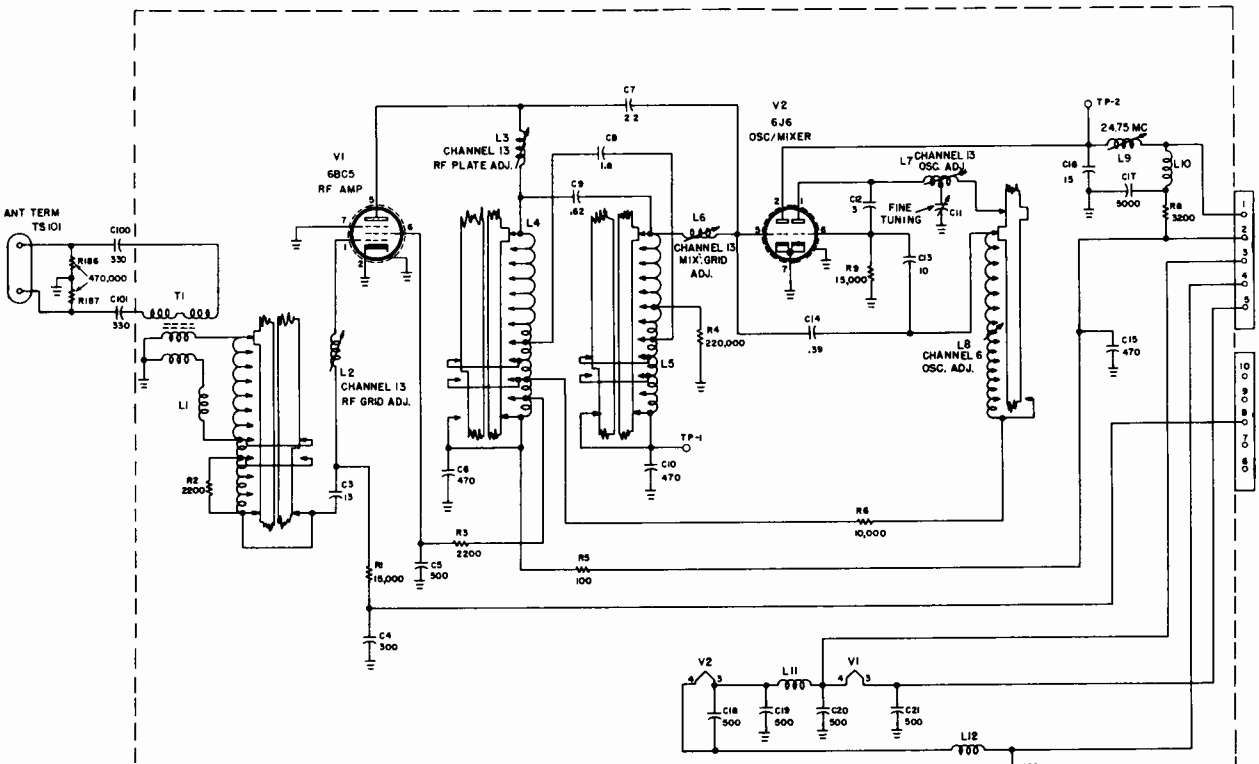

Hallicrafters 1C1345 Pentode Tuner

Connections to main diagram of Chassis A1200D on previous page.

Hallicrafters 1C1376 Cascode Tuner used in 1200D Chassis with prefix F, G, and T.

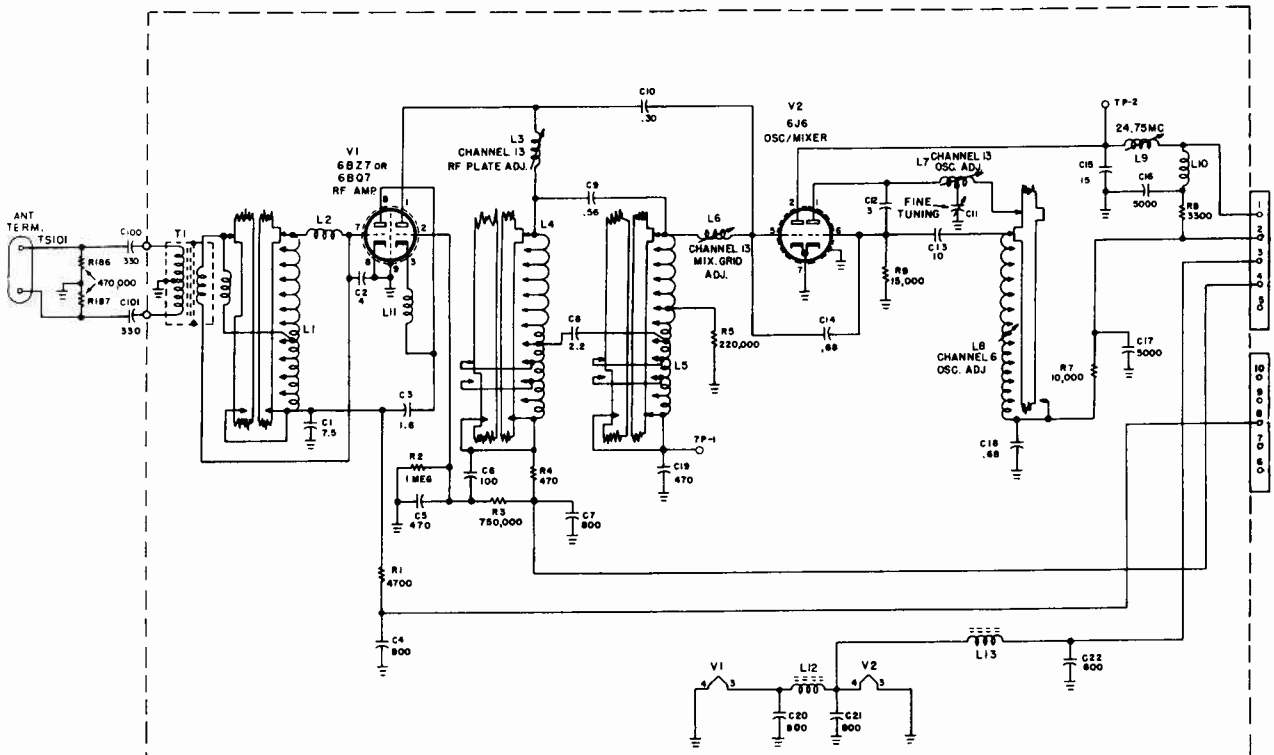

Hallicrafters 1C1376 Cascode Tuner

Connections to main diagram of Chassis T1200D on next page.

The Hallicrafters Co.
Chassis T1200D

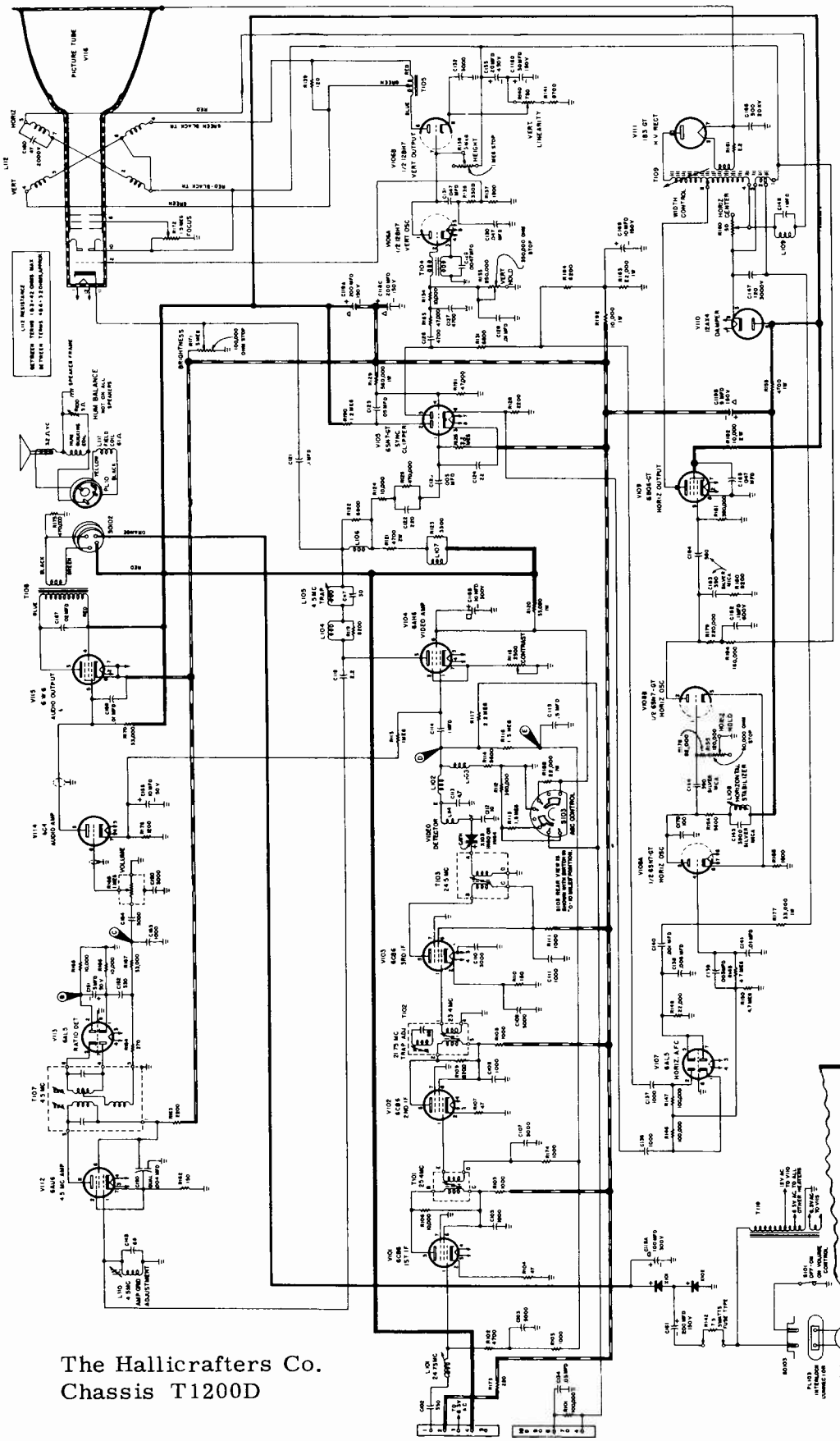

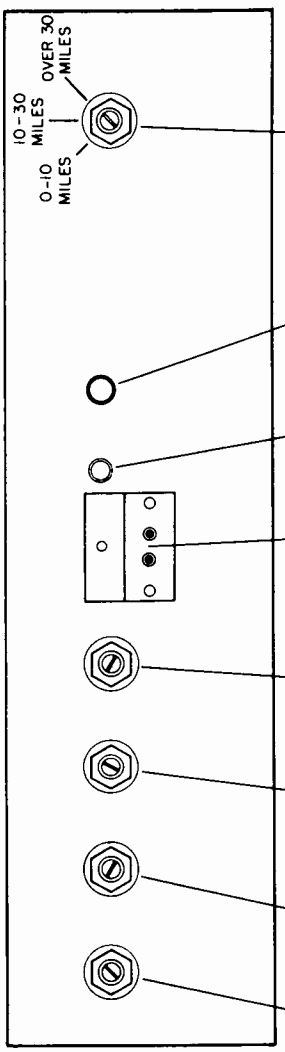

Rear Controls for Chassis J1200D and T1200D

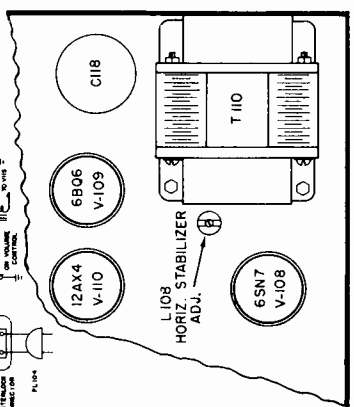

Horizontal Oscillator Adjustment Point for Chassis with Heater Transformer

The Hallicrafters Co.
Chassis T1200D

Hoffman
SERVICE DATA

TELEVISION CHASSIS
196, 196M, 196T
197 199

CHASSIS 196 MODELS 21M115, 21B116

CHASSIS 196M MODELS 21M115, 21B116, 21M308, 21B309, 21P310, 21M700, 21B701, 21P702

CHASSIS 196T MODELS 21M308, 21B309, 21P310, 21M700, 21B701, 21P702

CHASSIS 197 MODEL 27M709

The 197 chassis is similar to 196 chassis, except for the variations to be pointed out.

Chassis No. 197 uses a separate sub-chassis deflection system. This system contains its own low-voltage power supply, which consists of two 5U4's in parallel. Also two 6CD6's are used in parallel for the horizontal output circuit, plus two 6AX4's in parallel for the damper circuit.

The 6CB6 video amplifier has been replaced with a 6CL6 and the vertical output has been changed from a 6S4 to 6BX7GT.

The audio output has been changed from a single ended output stage using a 6K6 to a push-pull type using two 6V6's, which uses a unique phase inversion scheme.

CHASSIS 199 MODELS 21M906, 21B907, 21P908

Chassis 199 is designed to be used in conjunction with Chassis 182B, an AM-FM radio chassis, in combination models. Because of this arrangement the audio amplifier and audio output stages used in the 196 are not used in Chassis 199. The output from the ratio detector, V103, is terminated by a shielded cable which serves as the audio link between Chassis 199, the TV component, and Chassis 182B, the radio and audio amplifier component. The VOLUME control is necessarily deleted and the CONTRAST control is a single potentiometer with OFF-ON switch.

Material on these sets is continued below and on the next four pages.

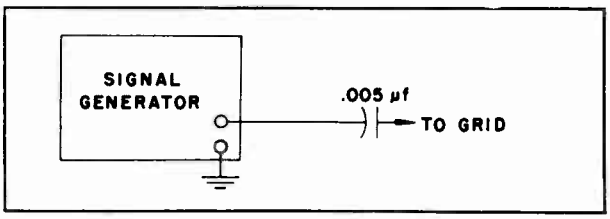

Figure 5. Signal Generator Isolation

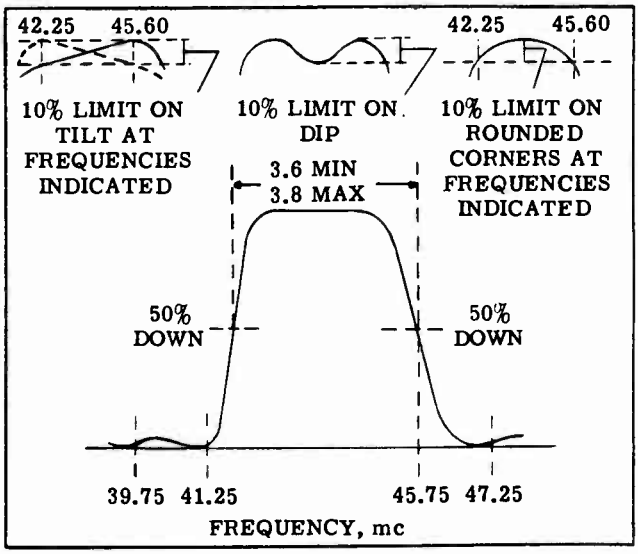

Figure 9. Picture I-F Response Curve

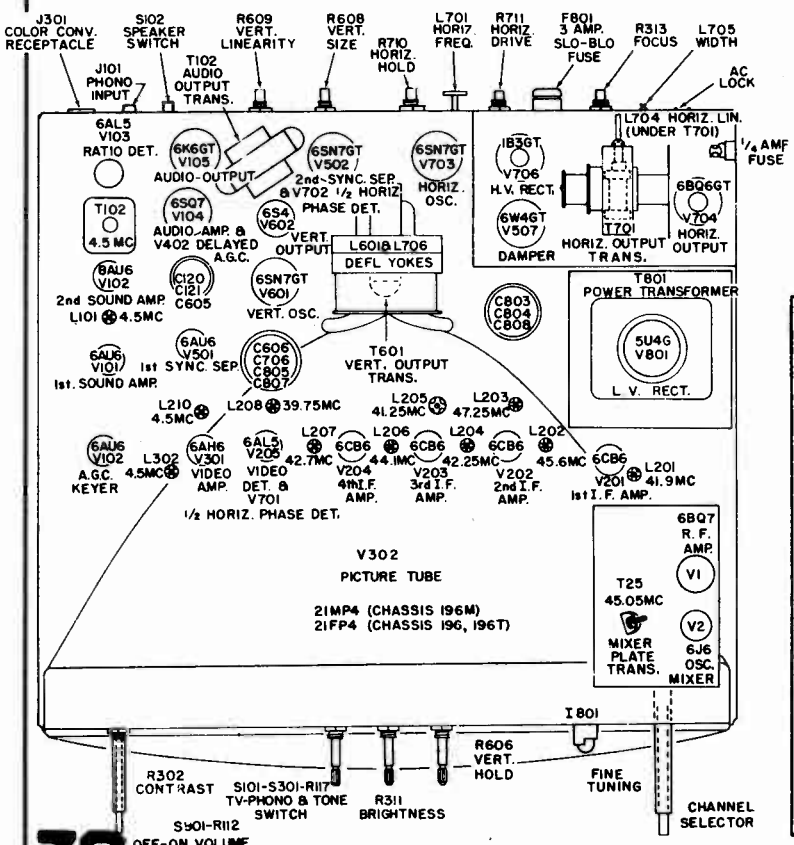

Figure 10. Top View Parts Layout

HOFFMAN

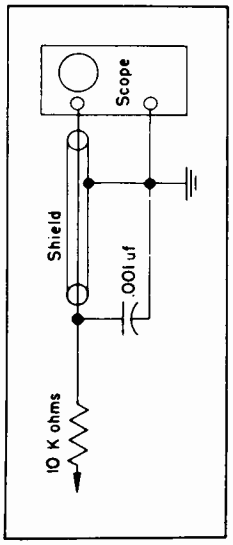

Figure 8. Oscilloscope Isolation

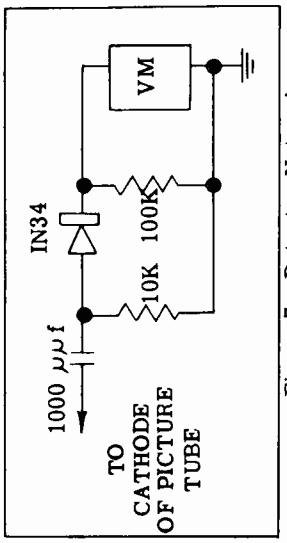

Figure 7. Detector Network

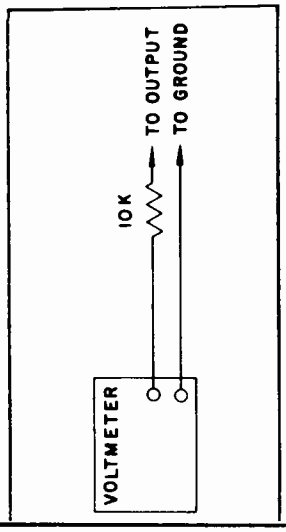

Figure 6. Voltmeter Isolation

TABLE III - TV ALIGNMENT PROCEDURE

STEP NO.	SIGNAL GENERATOR FREQUENCY, MC	CONNECT SIGNAL TO	OUTPUT INDICATOR	ADJUST	INSTRUCTIONS	SPECIAL CONNECTIONS AND SETTINGS
SOUND I-F AND RATIO DETECTOR						
1	4.5 CW	Pin 7 of V205	Meter across pin 7 of V103 and ground.	T101 Pri. (bottom) L101 L210	Tune for maximum reading on meter.	Signal level should be low enough to obtain approximately 6.5 to 7 volts on meter. Use isolation networks shown in Figures 5 and 6.
2	4.5 CW	"	Meter across junction of R111 and R112 and switch side of R110.	T101 Sec. (top)	Tune for zero meter reading; use same signal level as in step 1.	Repeat tuning of T101 primary and secondary until adjustments do not change.
TRAPS AND PICTURE I-F						
3	4.5 CW	Pin 7 of V205	Meter connected through detector network to picture tube cathode lead.	L302	Tune for minimum reading on meter.	Detector and isolating networks shown in Figures 5 and 7. Temporarily detune L210.
4	39.75 CW	Mixer grid	Voltmeter across pin 1 of V301 and ground.	L208	Tune for minimum reading on meter.	Apply -3V bias to AGC bus. See text for connection to mixer grid. Use isolating resistor between negative voltmeter lead and pin 1 of V301. Keep generator output low. Remove 1/4 amp. fuse or bias V704 with -60V for remainder of procedure.
5	41.25 CW	"	"	L205	"	
6	47.25 CW	"	"	L203	"	
7	42.70 CW	Mixer grid	"	L207	Tune for maximum reading on meter.	Set CONTRAST control for maximum contrast. Adjust signal level throughout I-F alignment so that a 1 volt DC output is maintained at pin 1 of V301.
8	44.10 CW	"	"	L206	"	
9	42.25 CW	"	"	L204	"	
10	45.60 CW	"	"	L202	"	
11	41.90 CW	"	"	L201	"	Temporarily tune mixer plate transformer for minimum voltmeter reading at 41.90 mc.
12	45.05 Cw	"	"	Mixer Plate Coil, L4	"	
13		Repeat steps 4 through 12 until adjustments do not change.				
14	Approximately 43.8 with 10-mc sweep. Marker required.	Mixer grid	High gain scope to pin 1 of V301.	Mixer Plate Coil and L201 1st. Other coils if necessary.	Set 45.75 mc marker at 50% point with Mixer Plate transformer T25. Eliminate tilt with L201	See Figure 8 for isolation network. Use markers to determine bandpass between picture carrier and 50% point on opposite skirt. Bandpass should be between 3.8 mc and 3.6 mc. Adjust other I-F coils to obtain proper curve only when absolutely necessary.

(Continued on the next three pages.)

Hoffman Chassis 196, 196M, 196T

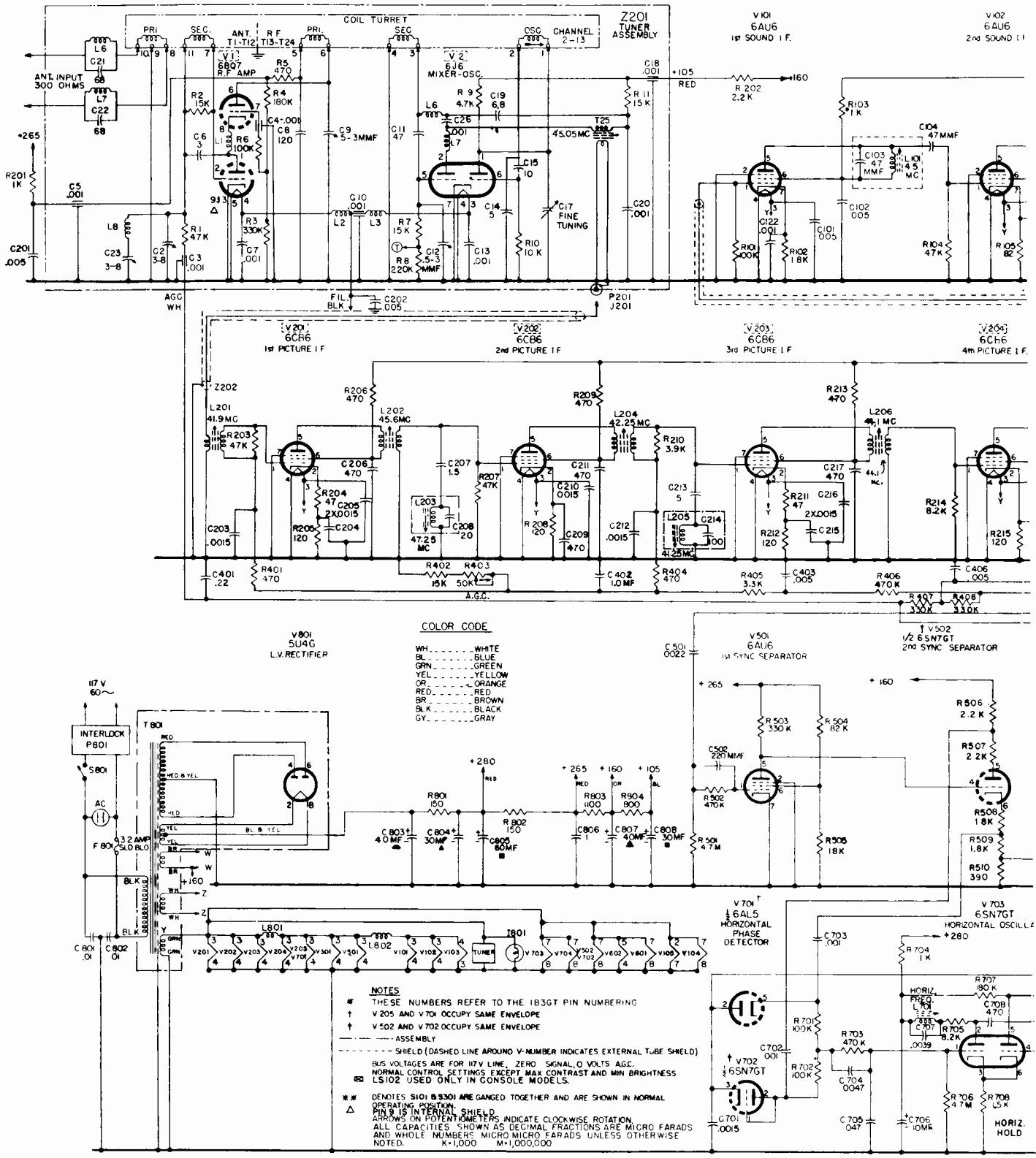

Schematic Diagram for Chassis 196, 196M, 196T

Hoffman Chassis 196, 196M, 196T

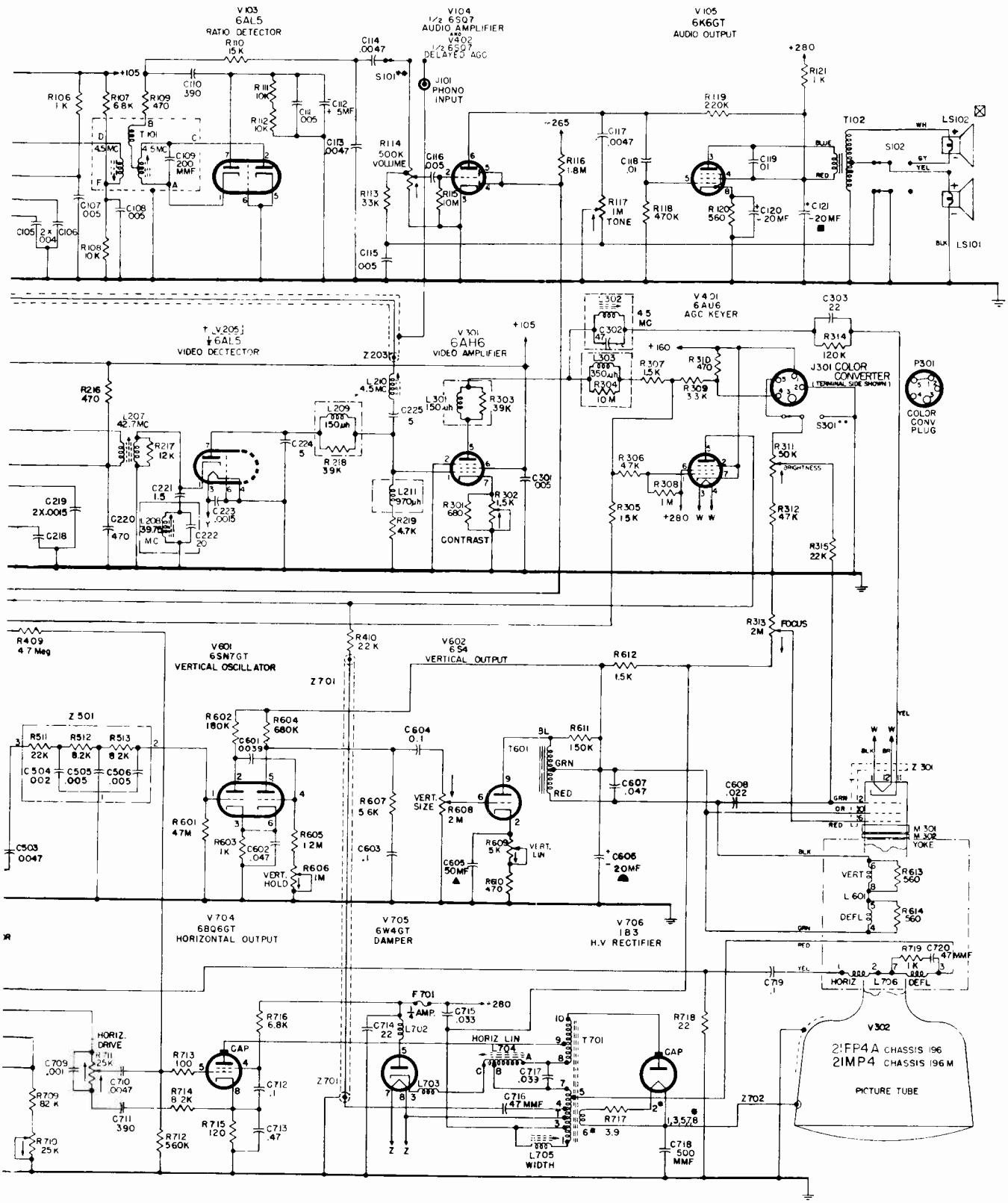

(Service material continued on the next page, over.)

HOFFMAN (Continued)

WAVEFORMS
H INDICATES SCOPE FREQUENCY EQUAL TO HORIZONTAL SWEEP FREQUENCY.
V INDICATES SCOPE FREQUENCY EQUAL TO VERTICAL SWEEP FREQUENCY.
NUMBERS AT BOTTOM OF WAVEFORMS ARE PEAK TO PEAK VOLTAGE VALUES OF WAVEFORMS OBTAINED WITH NORMAL SETTINGS OF ALL CONTROLS, AVERAGE SIGNAL INPUT, AND RAISED LINE VOLTAGE.

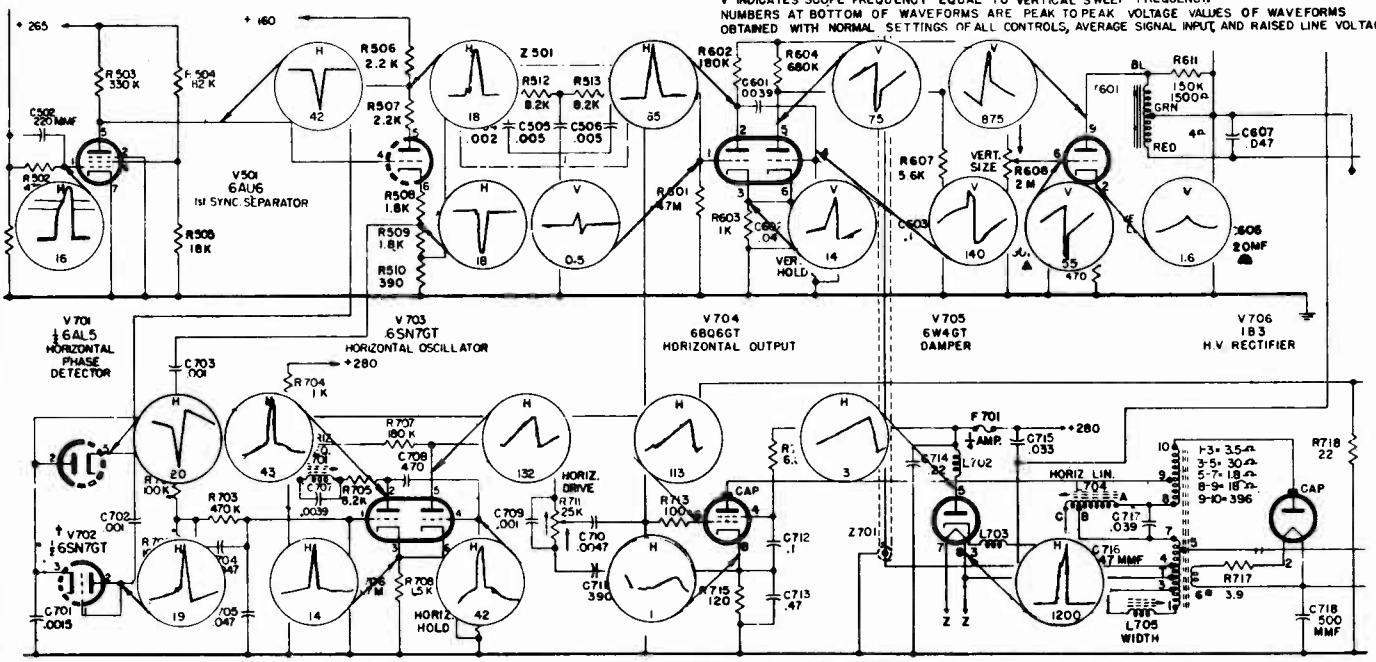

Bottom View Tube Layout and Pin Voltage Information

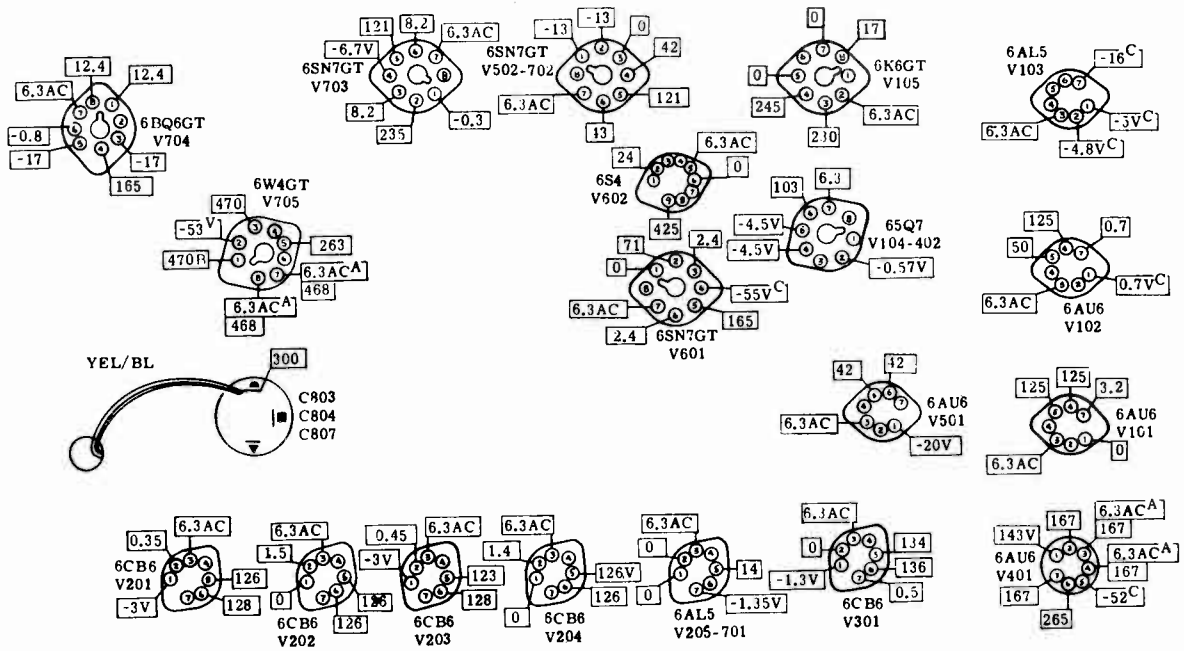

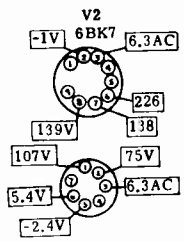

KEY

A - MEASURED RELATIVE TO OTHER HEATER PIN
B - PIN USED AS A TIE POINT ONLY
C - FLUCTUATES
V - MEASURED WITH A VACUUM TUBE VOLTMETER

390 — VOLTAGE AT PIN 8 WHEN OPERATING UNDER SPECIFIED CONDITIONS

1. RATED LINE VOLTAGE
2. SIGNAL THAT DEVELOPED -3 V I-F AGC BIAS
3. NORMAL SETTING OF ALL CONTROLS EXCEPT MIN. BRIGHTNESS, MAX. CONTRAST, AND MIN. VOLUME
4. ALL VOLTAGES ARE DC VALUES MEASURED RELATIVE TO GROUND AND ARE OBTAINED WITH A 20,000 OHMS/VOLTMETER UNLESS OTHERWISE NOTED

Magnavox 105 Series

Magnavox 105 Series TV receivers were made in a number of chassis and a suffix letter is employed to differentiate each type. At the time of publication, L version was issued and this circuit is printed on pages 84 and 85. This series 105L was used in some sets having Chassis No. CT362, CT363, CT372, and CT373. Series 105M used in the same type chassis numbers, differs only in a minor way from 105L, and these differences are covered in the table on page 84. An earlier Series 105C, 105E, and 105F are covered by the circuit on page 86, with a table of differences. At times these series have been used in Chassis No. CT331, CT332, CT333, CT334, CT335, CT336, CT337, CT338, CT339, CT340, CT341, CT342, CT343, CT344, CT345, CT346, CT347, CT348, CT349, CT350, CT351, CT352, CT353, CT354, CT355, CT356, CT357. Parts of these two group of series that are alike are combined in parts of circuits shown on page 85. While sets of the 105 Series having other suffix letters may differ in some important respects from the circuits shown, in the main this material can be used as a guide in servicing Magnavox Series 105 sets.

Service Hints on the 105 Series TV Chassis

Intercarrier Buzz -- Check alignment of secondary (top slug) of discriminator transformer. Adjust for minimum buzz on transmitted signal. Try several station to check if buzz is due to overmodulation at transmitter.

Loss of Horizontal and Vertical Sync. -- Check adjustment of horizontal drive trimmer. Check bias on noise inverter (V301A) grid. This voltage should be -9 to -13.5 volts.
White Raster; No Picture or Sound -- Check AGC amplifier (6AU6), check keyer coil and width coil, try other I.F. tubes (should have nearly equal mutual conductances).
Insufficient Height -- Check 6W6GT vertical output tube.
Picture Smear -- Check peaking coils in video amplifier circuit.

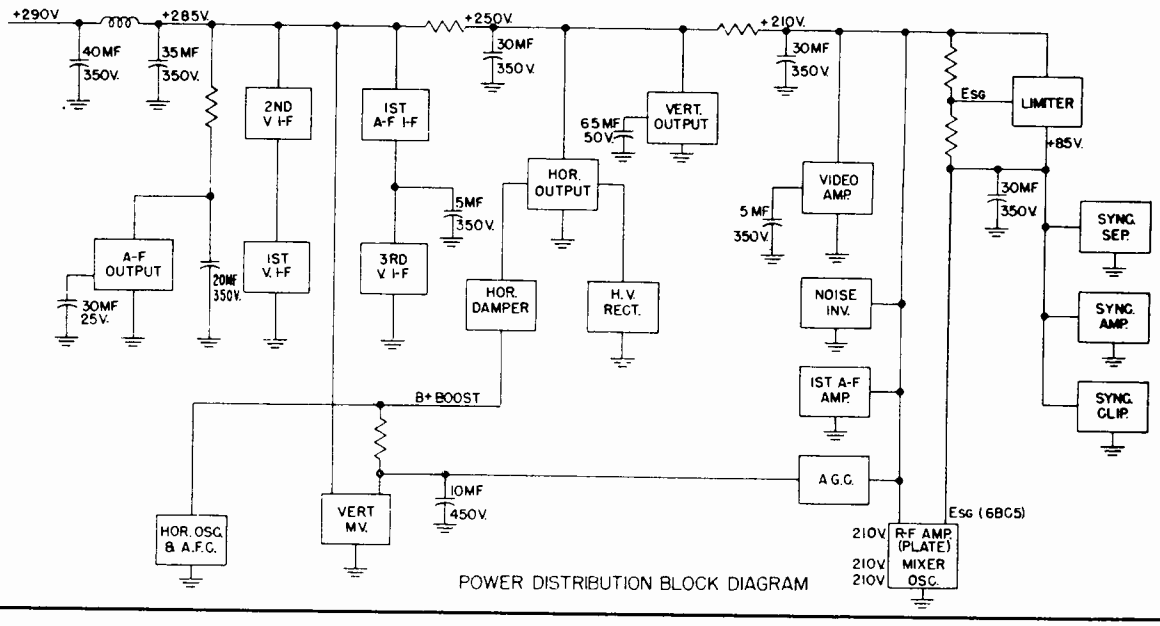

POWER DISTRIBUTION BLOCK DIAGRAM

Magnavox Series 105L and 105M

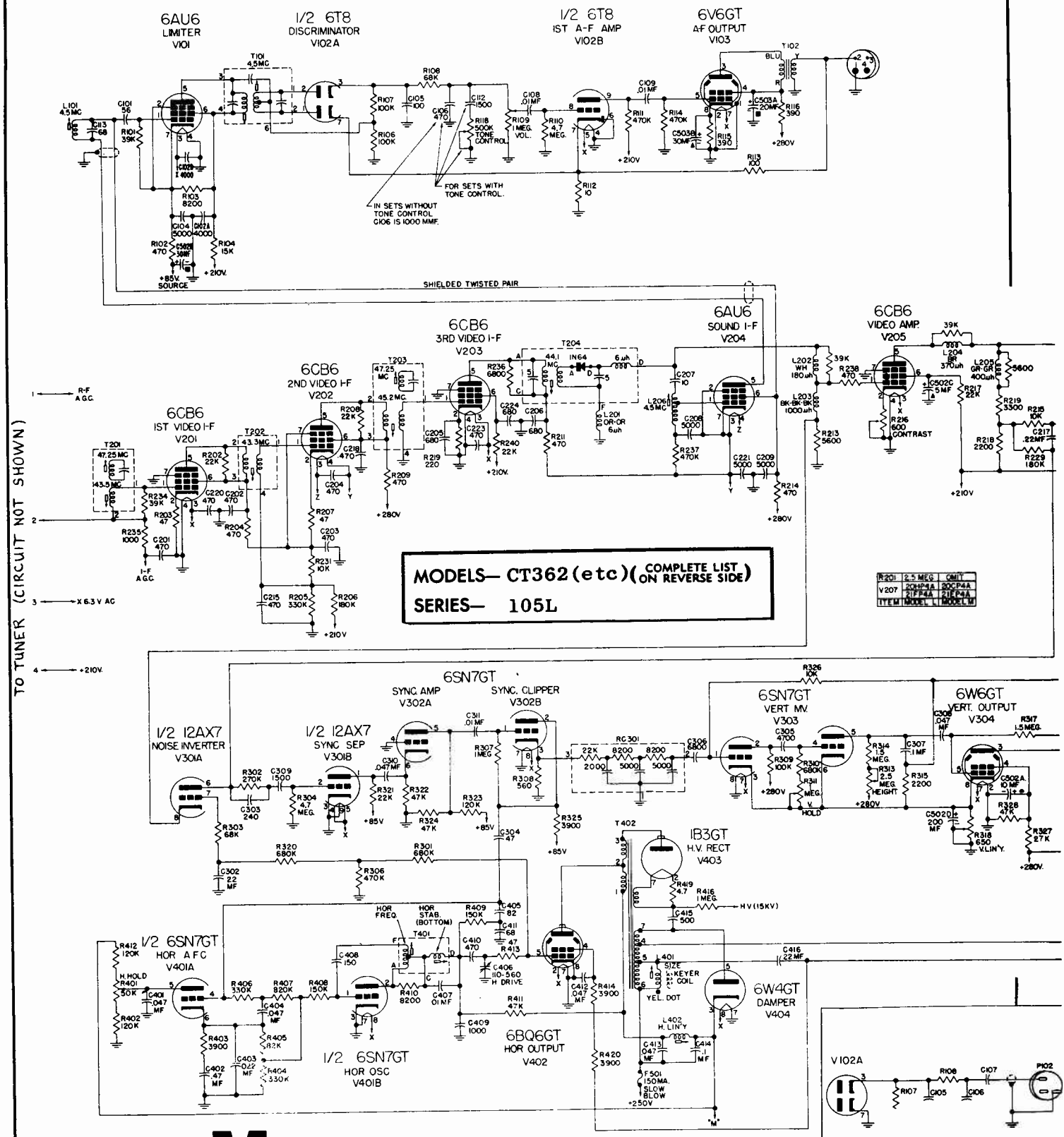

To main schematic, page 86.

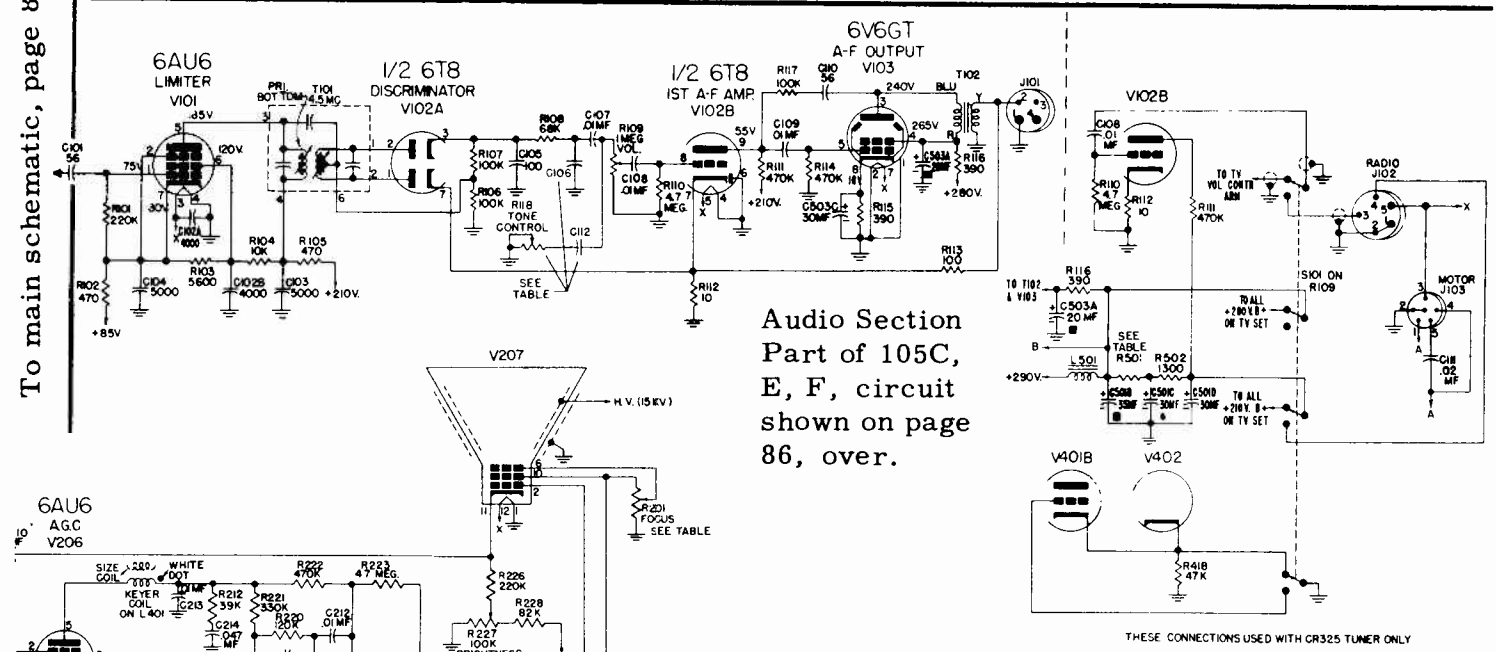

Audio Section Part of 105C, E, F, circuit shown on page 86, over.

Correct for all 105 Series

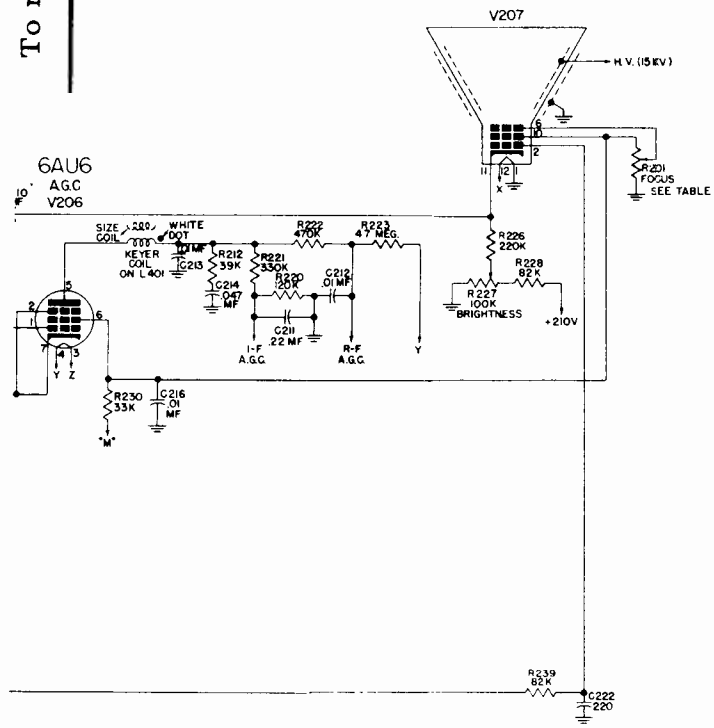

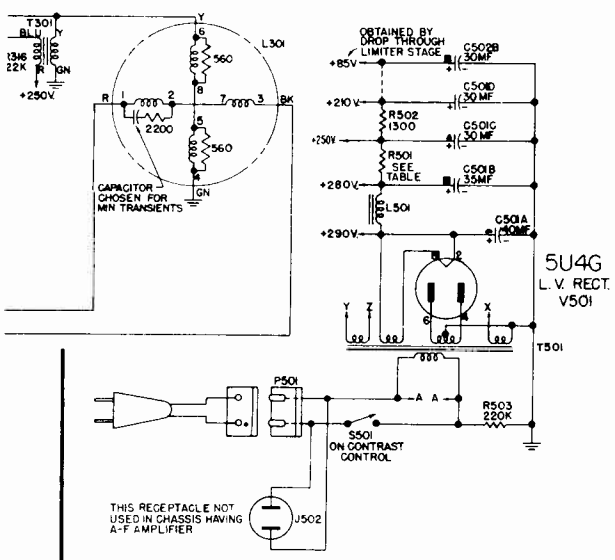

Power Supply Circuit, Applicable to all 105 Series.

Horizontal Oscillator and AFC Adjustments

1. Horizontal freq. adjustment, top slug T401
   a. Short out terminals C and D of the horizontal oscillator and AFC transformer. Set the Horizontal Lock trimmer 1 turn from full clockwise position and Horizontal Drive trimmer to 1-1/2 turns from tight.
   b. Turn Horizontal Hold control to full clockwise position and adjust the top slug of T401, until picture locks in.
   c. Check Horizontal Drive, Linearity, and Width controls.
2. Horizontal waveform adjust., bottom slug.
   a. Remove short from terminals C and D of T401.
   b. Connect oscilloscope probe in series with 15 mmfd. capacitor to terminal C. Set scope at horizontal frequency and adjust bottom slug of T401 so that the rounded and sharp peaks of the curve are of equal amplitude.
   c. Remove scope. With Horizontal Hold control in full clockwise position, adjust frequency slug (top of T401) until picture is just out of sync. as indicated by blanking bar appearing at left of picture. Back off frequency slug slightly until picture again locks in sync. This adjustment is made with Brightness control in full clockwise position.

Magnavox Series 105, continued.

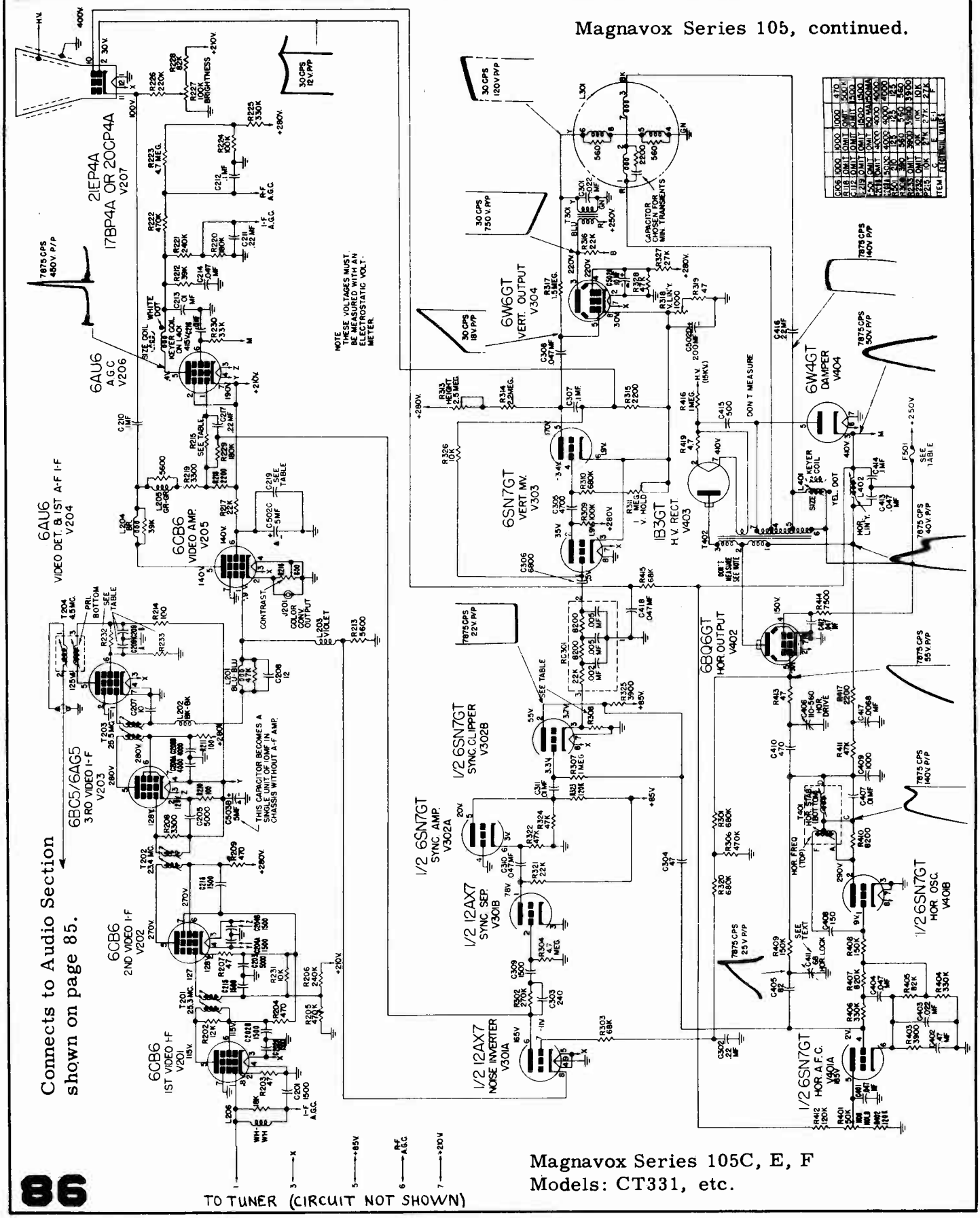

Connects to Audio Section shown on page 85.

Magnavox Series 105C, E, F
Models: CT331, etc.

john MECK industries

Chassis Types 9026, 9032, and 9033.

Models 17PCSB2, 17PCW2, 17PTE2, 20PCSB2, 20PCW2, 20PTE2, 20PTSB2, 20PTW2, 20TPRS2, 21PCS2, 21QDCS2, 24QDCS2, MM-617C, MM-617T, MM-620C, MM-620T, JM-717C, JM-717T, JM-720C, JM-720T, JM-721C, and JM-721CD.

SPECIFICATIONS

Electrical Input, 117 v. A.C.

Intermediate Frequency
- Video 26.1 MC
- Sound 21.6 MC
- Intercarrier Sound Frequency 4.5 MC

Antenna Input 300 ohms.

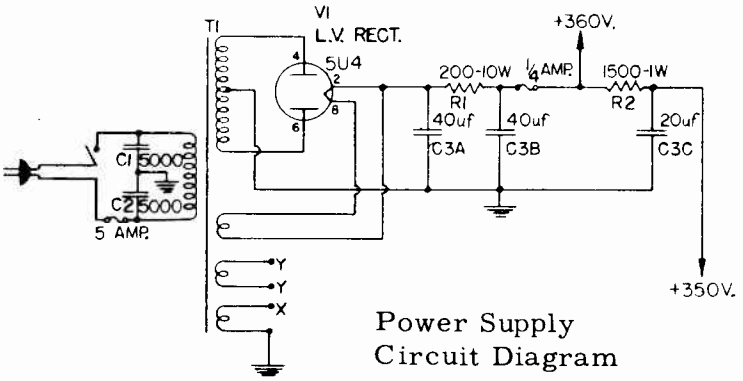

Power Supply Circuit Diagram

Circuits of the front end using either Standard Coil or Sarkes Tarzian tuners. Corresponding numbered terminals connect to main schematic diagram shown on the next page. This separation is made for printing convenience only.

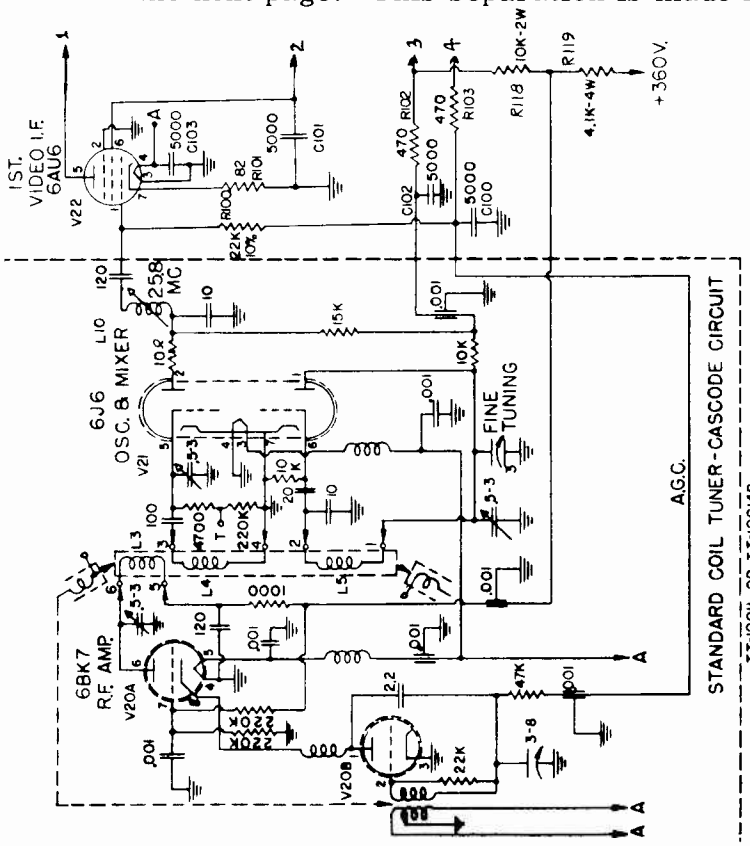

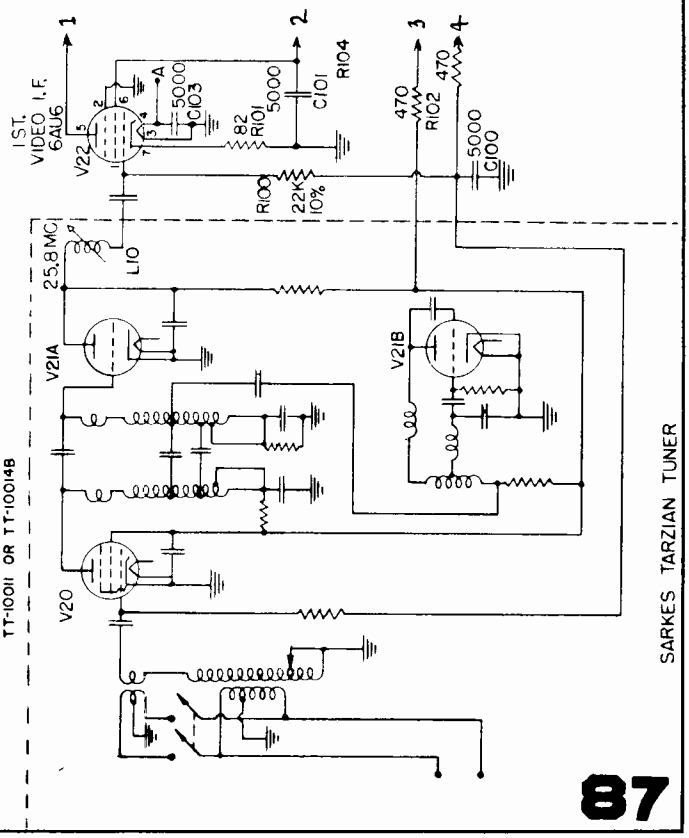

John Meck Industries, continued.

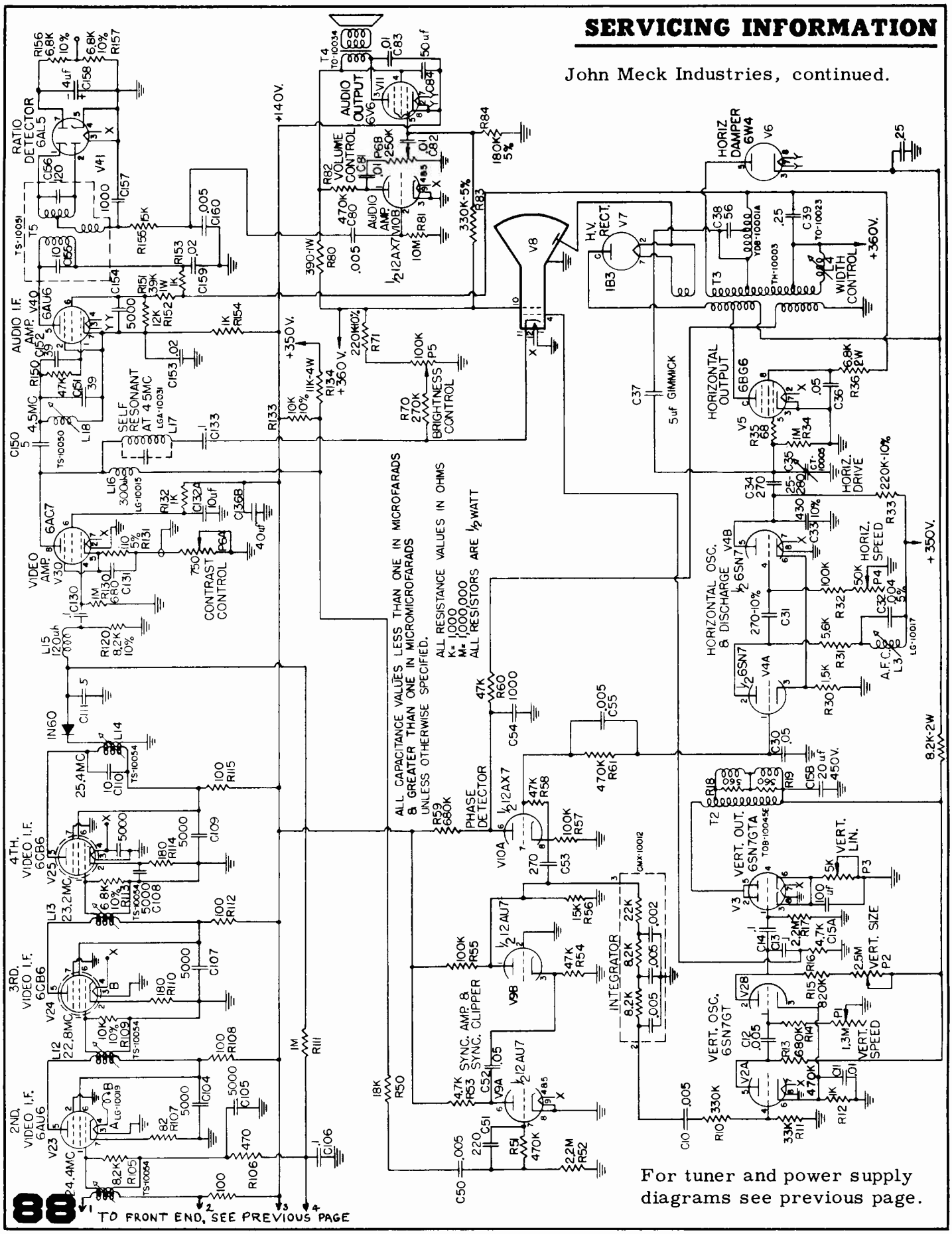

For tuner and power supply diagrams see previous page.

MONTGOMERY WARD

MONTGOMERY WARD

MODELS
25WG-3066A & B
25WG-3071A & B
25WG-3072A & B
25WG-3073A & B

MODELS
25WG-3075A&B
25WG-3077A&B
25WG-3079A&B

This circuit diagram continued on page 90.

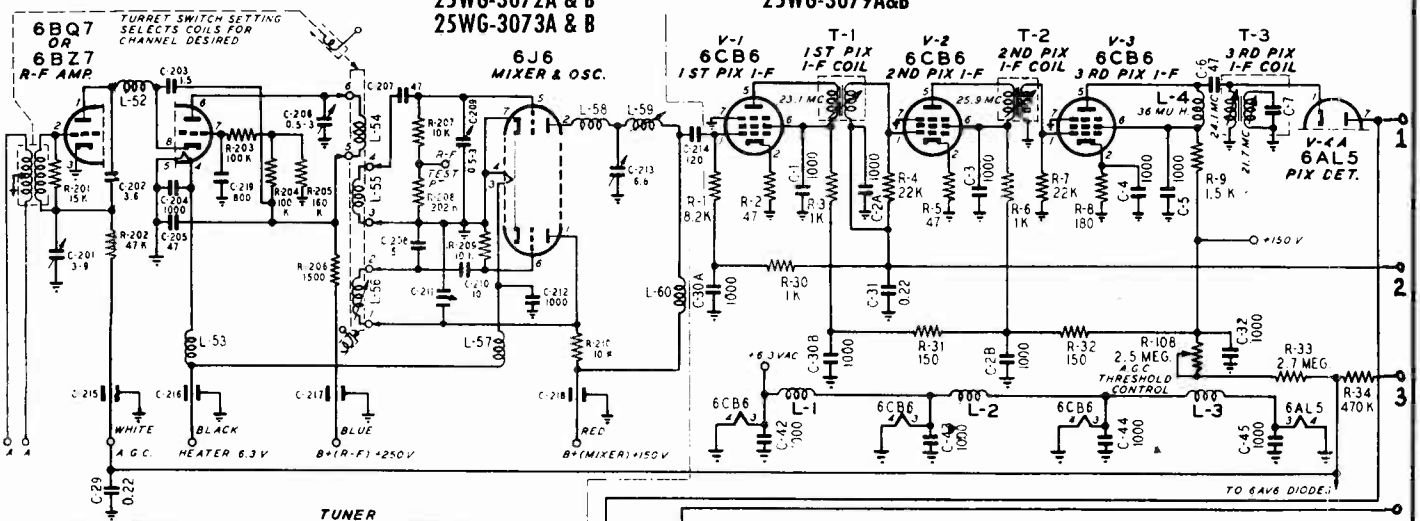

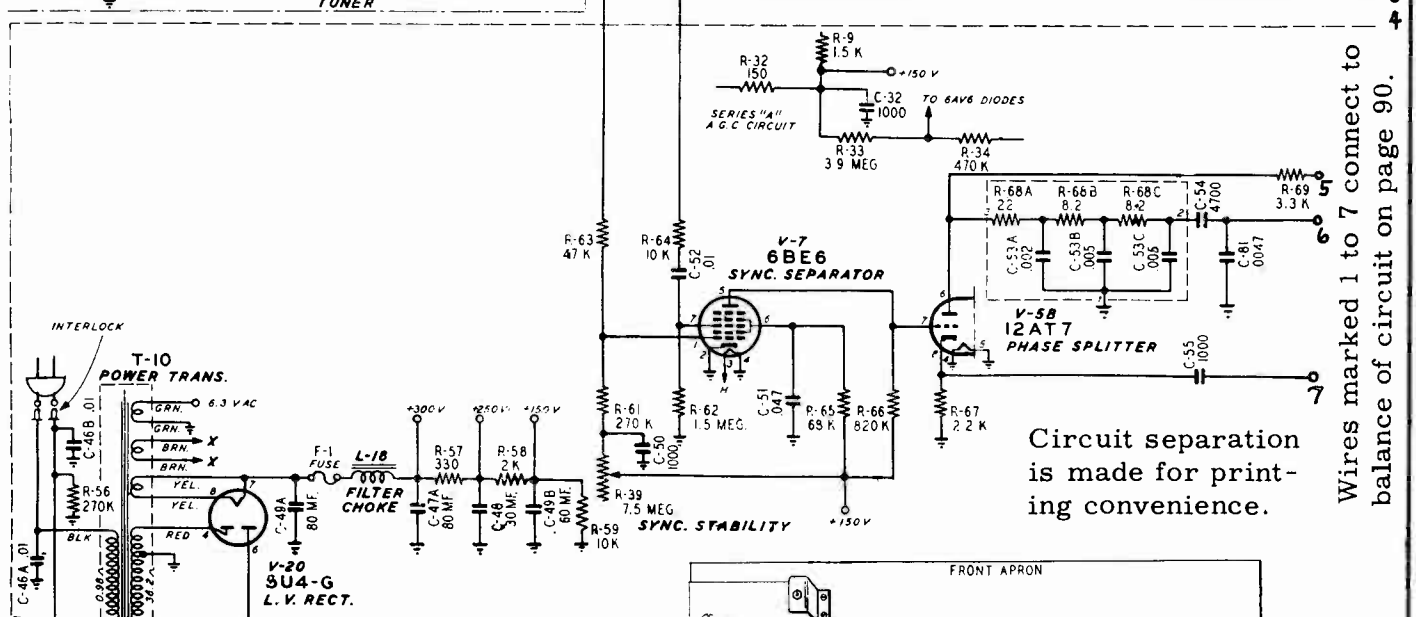

Circuit separation is made for printing convenience.

Wires marked 1 to 7 connect to balance of circuit on page 90.

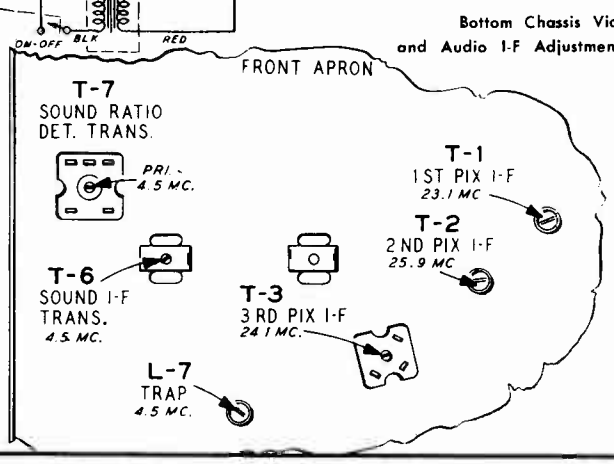

Bottom Chassis Video and Audio I-F Adjustments.

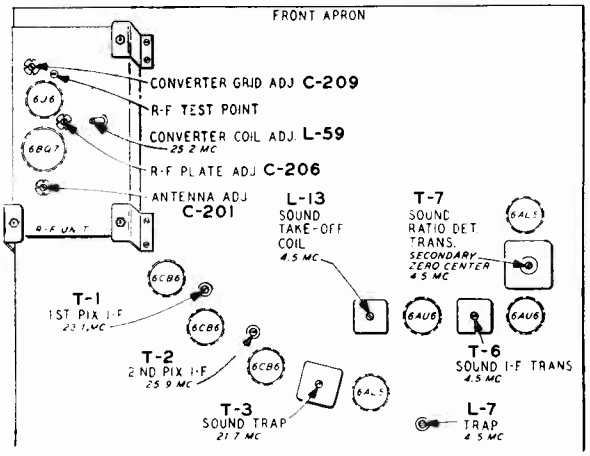

Top Chassis Video and Audio I-F Adjustments

MONTGOMERY WARD

Models 25WG-3066, 25WG-3071, 25WG-3072, 25WG-3073, 25WG-3075, 25WG-3077, 25WG-3079.

These models have suffix A and B, indicating a difference in the AGC circuit as shown in diagram.

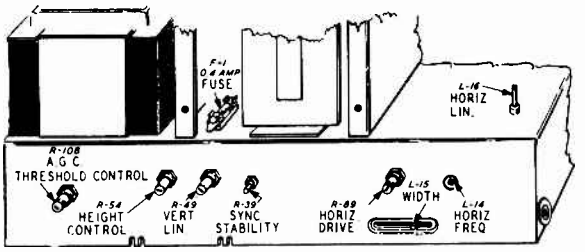

Adjustments Rear of Chassis

NOTE—AGC control used only in issue "B" receivers.

Wires marked 1 to 7 inclusive connect to balance of circuit on page 89.

Motorola TV

The circuit diagram on the next page, over, is exact for Chassis TS-292A and TS-324A. All other chassis listed in the table below are similar and their main differences are explained. Separate circuits of series filament connections, audio section, and conventional tuner used in some chassis are shown separately. Alignment information applies to all sets.

Chassis	Used in Models	Tuner	Tube	How different from TS-292A
TS-292A	21C1, 21C1B, 21F2, 21F2B, 21F3, 21F3B, 21K4, 21K4A, 21K4B, 21K4W, 21K5, 21K5B, 21K6, 21K7	Cascode	21FP4	Use TS-292A Chassis shown in schematic diagram.
TS-292B	21T4AC, 21T4ACE, and also several models listed above.	Cascode	21FP4	C-74 changed to 10 mfd., also other minor part changes.
TS-324A (or -B)	21T4A, 21T4EA, 21T5A, 21T5BA	Cascode	21MP4	Same as TS-292A except for differences shown in main schematic
TS-395A	17F13, 17F13B, 17K14, 17K14A, 17K14B, 17K14W, 17K15, 17K15B, 17K16, 17T11, 17T12, 17T12B, -W	Conventional	17LP4	Audio circuit differs, see diagram. Filament transformer has 3 windings
TS-400A	17T11E	Conven.	17LP4	Series filament, audio diff., see diag
TS-401	17F12D, 17K13D, 17T9EF, 17T9F, 17T10D	Conventional	17TP4	Audio circuit differs, see diagram.
TS-408A	17F13C, 17F13BC, 17K14C, 17K14BC, 17K14WC, 17K15C, 17K15BC, 17K16C, 17T11C, 17T11EC, 17T12C, 17T12WC	Cascode	17LP4	Main difference in picture tube, otherwise same as TS-292A Chassis shown in schematic diagram.
TS-410A	17T13	Conven.	17HP4	See note under TS-400A.
TS-501A	21T3	Cascode	21MP4	Same as TS-324A, but no tone control

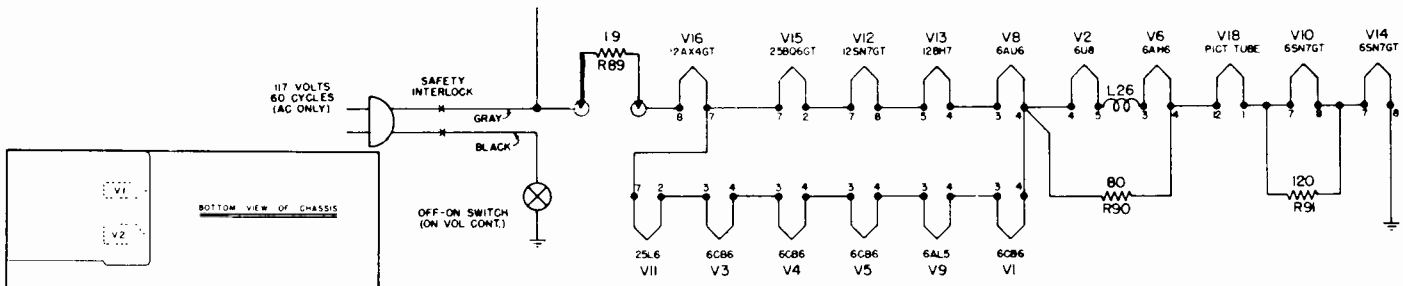

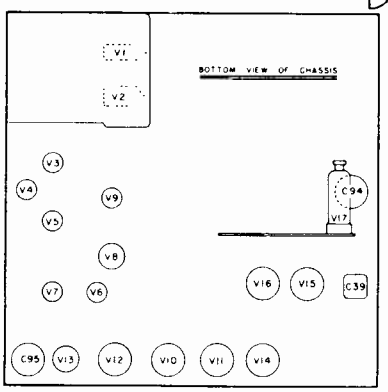

Above is the circuit of series wired tube filaments used in Chassis TS-400A and TS-410A.

At left is a drawing showing tube layout of Chassis TS-292A and TS-324A.

(Continued on the next seven pages).

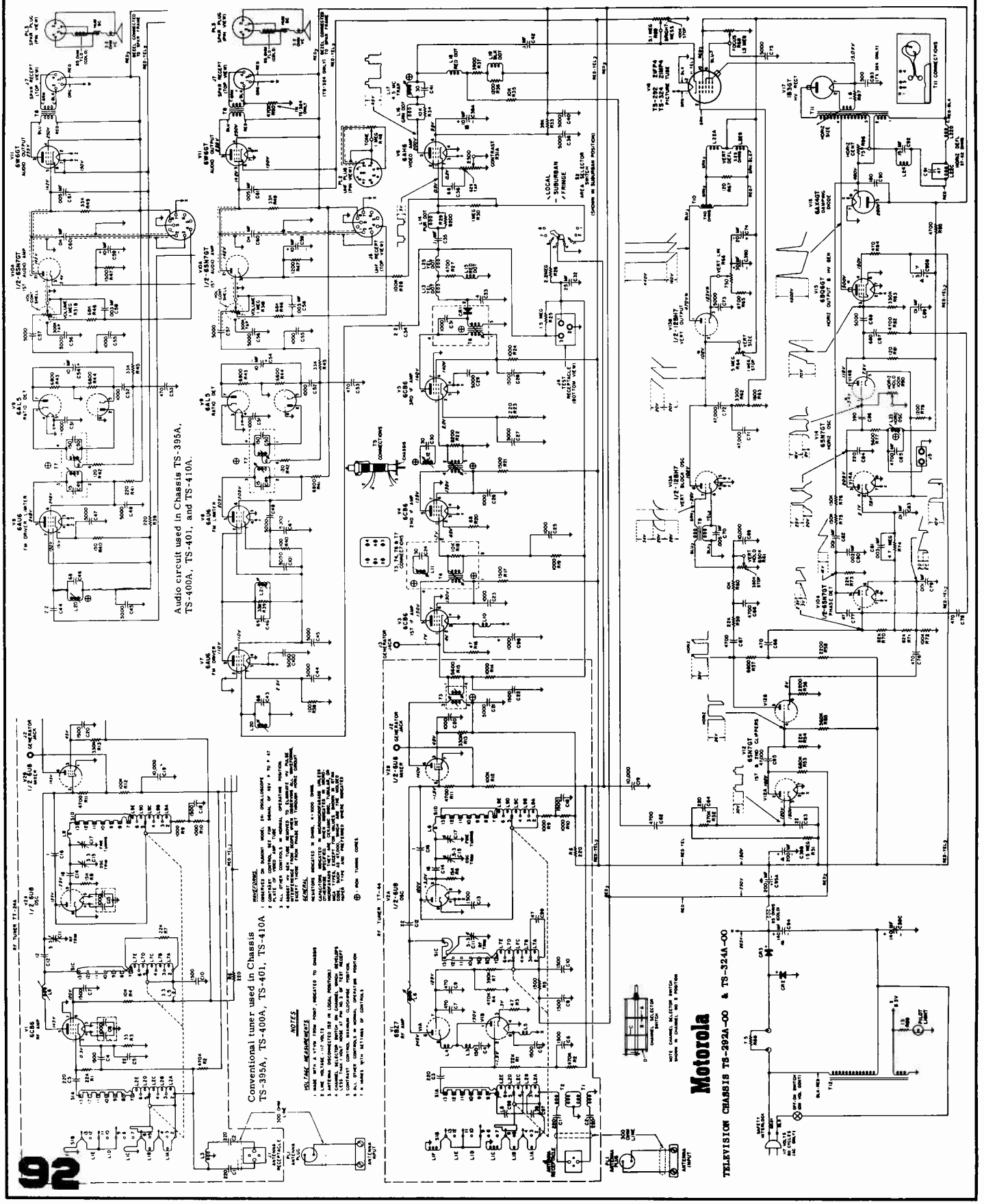
Audio circuit used in Chassis TS-395A, TS-400A, TS-401, and TS-410A.
Conventional tuner used in Chassis TS-395A, TS-400A, TS-401, TS-410A
Motorola
TELEVISION CHASSIS TS-292A-00 & TS-324A-00
NOTES
VOLTAGE MEASUREMENTS
GENERAL
92

MOTOROLA 1953 Models. General Information and Production Changes.

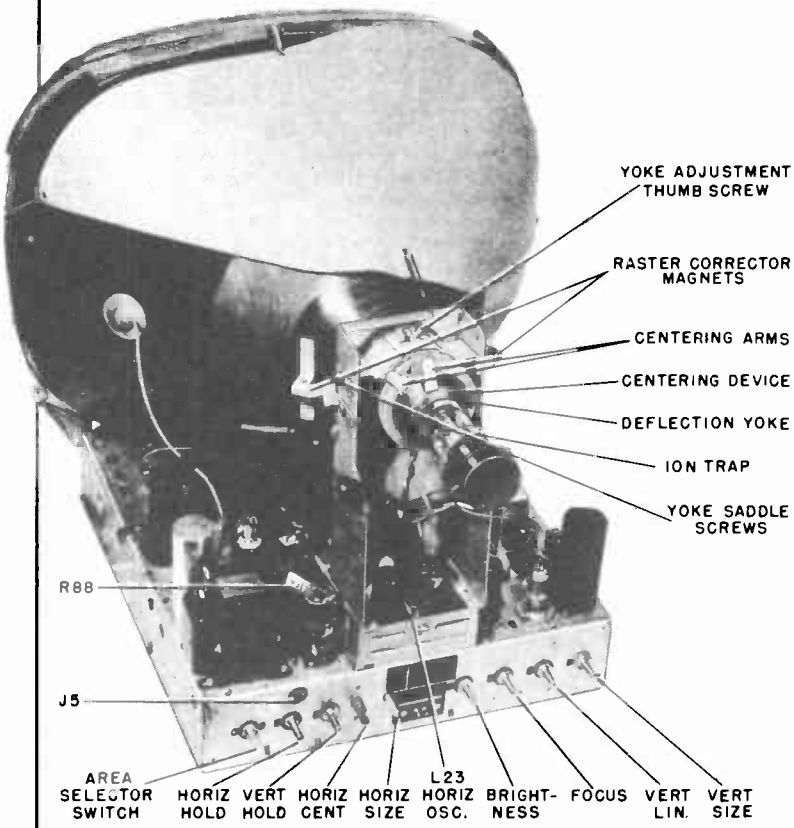

HORIZONTAL HOLD ADJUSTMENT

The HORIZONTAL HOLD control should have a sync range of approximately 50°. If the control is too critical, adjust as follows:

1. Shunt the HORIZONTAL OSCILLATOR coil L-23 to ground with a .25 mf 400V capacitor. This may be done with the chassis in the cabinet by placing the capacitor across the two-pin receptacle (J-5) located as shown in Figure 2.

2. With the HORIZONTAL CENTERING control, move the picture to the left so that the right edge of the raster can be seen, as viewed from the front of the set. Adjust the HORIZONTAL HOLD control for about 1/16" of sync pulse. (The sync pulse appears as a darker gray bar at the right edge of the blanking pulse. The blanking pulse is the gray bar at at the right edge of the raster.)

3. Remove the .25 mf capacitor from across the HORIZONTAL OSCILLATOR coil.

4. Adjust the HORIZONTAL OSCILLATOR coil until the same amount of sync pulse can be seen as was noted in step 2.

FOCUS

The zero focus type of electrostatically focused tube used in these chassis requires a fixed potential applied to the focusing anode which is supplied through the focus control potentiometer. This control, in effect, provides a means of compensating for differences in gun structure between tubes, but is far less critical in adjustment than was the focus control in the electromagnetically focused tubes.

PRODUCTION CHANGES

With the current line of TV chassis (TS-292, TS-324, TS-395 & TS-400), a new system of chassis coding has been started. The first production chassis number carries the suffix "A-00" (i.e., TS-292A-00, TS-395A-00). With the first minor revision, the suffix becomes "A-01", and with each subsequent minor change "A-02", "A-03", etc. The first major revision changes the suffix to "B-00" and, as before, each following minor change is labeled "B-01", "B-02", etc.

Chassis Coding	Change
TS-292A-01 TS-324A-01 TS-395A-01 TS-400A-01	R-65, the sand coated 8700 ohm resistor on the vertical linearity control, was replaced by two 2-watt carbon resistors in series - R-65 (4700) and R-93 (3900).
TS-292A-02 TS-324A-02	The centering device, E-2, is mounted on the yoke cover instead of being a separate unit.
TS-292A-03 TS-324A-03	R-94 (0.47 ohms) was put in series with the heaters of V-10, the 1st Audio Amp & Phase Detector, to reduce heater-to-cathode leakage.
TS-292A-04 TS-324A-04	Increased high voltage by revising high voltage transformer, T-11 (has issue "C" coding after part number). The following horizontal circuit changes were also made to increase high voltage: C-84 changed from 220 mmf to 100; R-81 changed from 120K to 100K, and R-84 (470) omitted.
TS-292B-00 TS-324B-00	Filament transformer changed to auto transformer type. This boosts the AC input, resulting in a raise in the high voltage applied to the 2nd anode. Transformer has new part number.
TS-292B-01 TS-324B-01 TS-408A-01 TS-501B-00	Revised 3rd IF transformer. Differs from the original only in that L-13 is mounted on the transformer and becomes a part of the T-6 assembly. Transformer has new part number.
TS-292B-02 TS-408A-02 TS-501B-01	C-74 changed from 20 mf to 10 mf to eliminate vertical flutter due to line voltage variations.
TS-292B-03 TS-408A-03 TS-410A-02 TS-501B-02	C-75 (5000 mmf) omitted and a 100K 1-watt resistor added between the focus control arm and the blue lead to the picture tube focusing anode. This adds protection to the focus control potentiometer.
TS-408A-00	Original production incorporated the changes of the TS-292A-03.
TS-410A-01	C-61 changed from .005 to .01 mf and C-102 (.02 mf) added to improve tone.
TS-501A-00	Original production incorporated changes of TS-324A-04.

MOTOROLA 1953 Models. Alignment Information.

ALIGNMENT

Since the power cord circuit is broken by the interlock when the cabinet back is removed, it will be necessary to obtain an extra power cord with the female interlock receptacle in order to make a power connection to the receiver. Order Motorola Part No. 30B470756.

It is important that an isolation transformer be used between the receiver and the line when any test equipment is attached to the chassis. Due to the full wave rectifier, there is always a potential difference between the chassis and earth, and it is very important that an isolation transformer be used when servicing the receiver. This precaution is especially important if grounded test equipment is used. NEVER GROUND THE RECEIVER CHASSIS DURING TESTING OPERATIONS OR INSTALLATION UNLESS AN ISOLATION TRANSFORMER IS USED.

ORDER OF ALIGNMENT

A complete receiver alignment can be most conveniently performed in the following order:

1. IF & Mixer Transformers
2. Oscillator & RF Sections
3. 4.5 Mc Trap
4. Audio Take-Off, Interstage Coil, & Ratio Detector

IF AMPLIFIER ALIGNMENT

Equipment Required:

IF Sweep Generator meeting the following requirements:

1. 18 to 30 mc, approximately 12 mc sweep width.
2. Output constant and adjustable to at least 0.1 volt maximum.
3. Accurately calibrated, adjustable markers

Cathode Ray Oscilloscope - Preferably one with a calibrated attenuator.

AM Signal Generator - Adjustable Output

NOTE: If there is no built-in marker in the sweep generator, loosely couple the output of an accurately calibrated AM signal generator to the IF strip. At all times, keep the marker output low enough to prevent the marker from distorting the response curve.

If a wide band scope is used, the marker will be more distinct if a capacitor of 100 to 1000 mmf is placed across the scope input. Use the smallest size possible, since too large a value will affect the shape of the curve.

Procedure:

1. Remove the horizontal output tube, V-15, to eliminate RF interference in the oscilloscope.

2. By means of an external battery, apply a negative 3 volt bias, through a decoupling resistor of 47K ohms, to the AGC line, which is connected to pin 1 of the test receptacle (J-4). See Figure 4 for receptacle location.

3. Through a 47K ohm decoupling resistor, connect the oscilloscope across the video detector load resistor R-27 (4700) which may be reached from pin 3 of test receptacle (J-4). If a stronger output is required, connect the scope between picture tube cathode (yellow lead) and chassis. The curve seen at this position will be the reverse of the polarity shown in Figures 5 & 6.

4. Turn Area Selector Switch (S-2) to LOCAL position.

5. Using leads as short as possible, connect the sweep generator, through a 1000 mmf capacitor, to jack J-3, feeding into the grid of 1st IF tube V-3. See Figure 4. (Do not use the loose or "spraying" method of coupling.) Set the generator center frequency to 24.6 mc, with a sweep deviation of 10 mc.

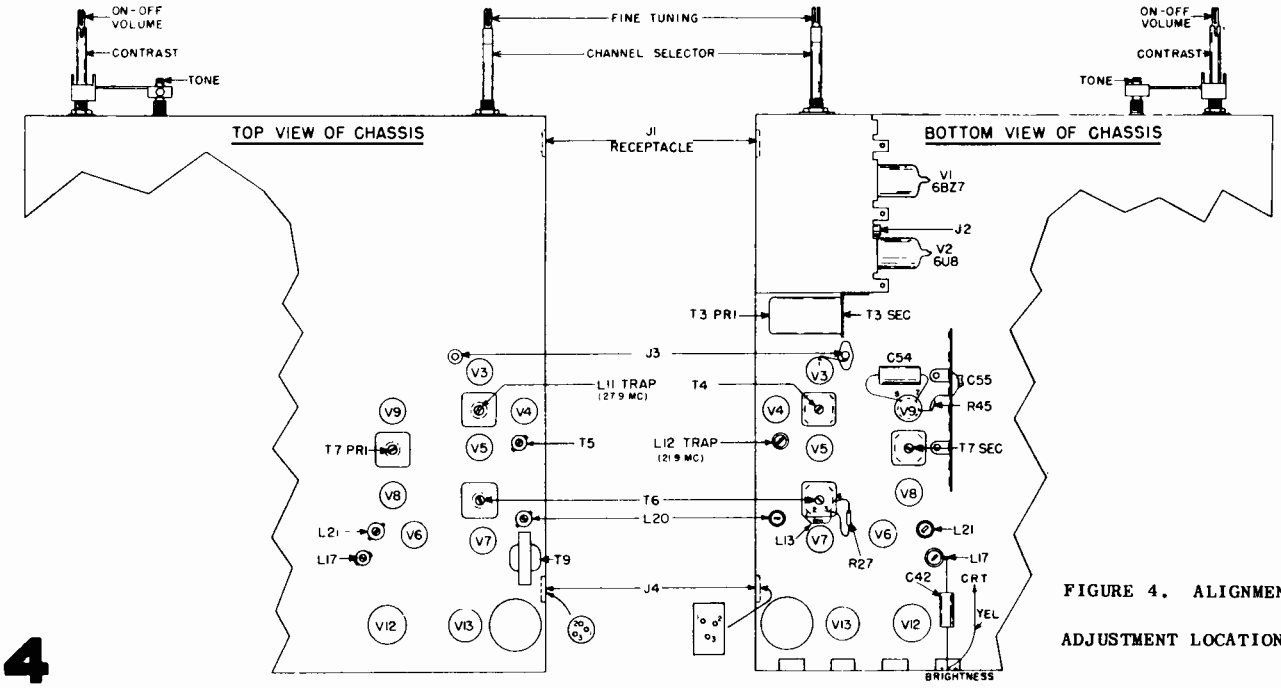

FIGURE 4. ALIGNMENT ADJUSTMENT LOCATIONS

MOTOROLA 1953 Models. Alignment Information, continued.

6. Detune the oscillator by placing a shunt wire across the oscillator inductance (from position 2 to position 13 on the bandswitch).

7. Tune the 1st IF transformer, T-4, to place a 26.6 mc marker on the high side of the response curve 50% down from maximum response. At the same time, adjust T-6 to provide a flat top or symmetrical response curve. Tuning the two transformers together will make for proper marker placement and "jacking" action of T-6. See Figure 5.

CAUTION: A. Keep the signal input low, to prevent flattening the top of the curve, due to limiting in the video or scope amplifiers.

B. The dressing of plate and grid components in the IF circuit affects tuning. Do not move indiscriminately.

C. The resonance point of the IF coils and the trap will be found at two settings of the core. The correct setting is the one with the core at the outer end of the winding.

8. Tune the 2nd IF transformer, T-5, to place a 22.8 mc marker on the low side of the response curve 50% down from maximum response. At the same time, adjust T-6 to provide a flat top or symmetrical response curve as in step 6. See Figure 5.

9. Tune trap L-12 for maximum attenuation on the curve at 21.9 mc, as in Figure 5. Make sure the core is toward the outside of the trap winding (toward the top).

10. Tune trap L-11 for maximum attenuation on the curve at 27.9 mc, as in Figure 5. Make sure the core is toward the outside of the trap winding (toward the top).

11. Move the generator and capacitor to jack J-2. See Figure 7. Short out R-11 (4700) located between the jack and the mixer grid.

12. Turn the primary and secondary of the mixer IF transformer, T-3 so that the bandpass appears as in Figure 6.

NOTE: This is a double-tuned circuit. Make sure the slugs are tuned away from the center of the coil.

NOTE: It is important that the 21.9 mc and 27.9 carriers are attenuated as much as shown in Figure 6. To calculate, connect an AM generator to the mixer grid and a VTVM across the detector load resistor. Take voltage readings at 21.9 mc, 24.6 mc, and 27.9 mc and divide per following formula: With proper attenuation -

$$\frac{\text{voltage reading at 24.6}}{\text{voltage reading at 21.9}} = \text{between 50 and 80}$$

and

$$\frac{\text{voltage reading at 24.6}}{\text{voltage reading at 27.9}} = \text{at least 100}$$

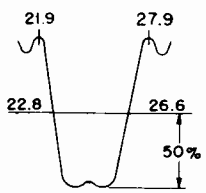

FIGURE 5.
IF RESPONSE CURVE

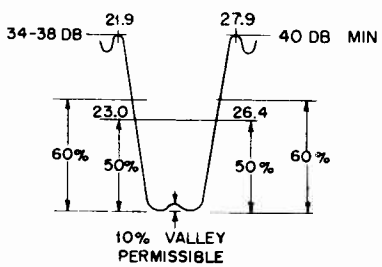

FIGURE 6.
MIXER RESPONSE CURVE

BANDWIDTH

The IF bandwidth may be checked with an AM signal generator, if desired. Connect the generator, through a 1000 mmf capacitor, to jack J-2 in the grid circuit of the mixer tube, V-2B, and an electronic voltmeter across the video detector load resistor R-27 (4700). Short out R-11 (4700), set the generator frequency to 24.6 mc, and adjust its output for a 1 volt reading on the meter. Double the output of the generator. Tune to both sides of 24.6 mc and note the frequencies at which the meter again reads 1 volt. These frequencies indicate the 6 db bandwidth points and should be 22.9 mc and 26.4 mc. By watching the meter while tuning slowly through the band, any serious peaks or holes in the response curve can be detected.

REGENERATION

After the mixer and IF stages have been aligned, a check for regeneration in the IF strip should be made as follows:

1. Remove the battery bias and observe the response curve on the scope as taken between the picture tube cathode (yellow lead) and chassis. The bandwidth may change with the bias removed, but should not change more than 0.2 mc. If the bandwidth does change more than 0.2 mc, check the cathode resistors or change tubes.

2. Set the contrast control at maximum gain (fully clockwise).

3. Decrease the generator input until the output signal shows a marked decrease.

4. Any regeneration present will be indicated by sharp peaks on the overall response curve.

NOTE: The oscillator should be detuned, as described above, during this procedure

MIXER SENSITIVITY MEASUREMENTS

1. Connect an AM signal generator, set at 24.6 mc, modulated 30% with 400 cycles, to jack J-2 through a capacitor of 1000 mmf. Short out R-11 (4700).

2. Remove the battery bias from the AGC line.

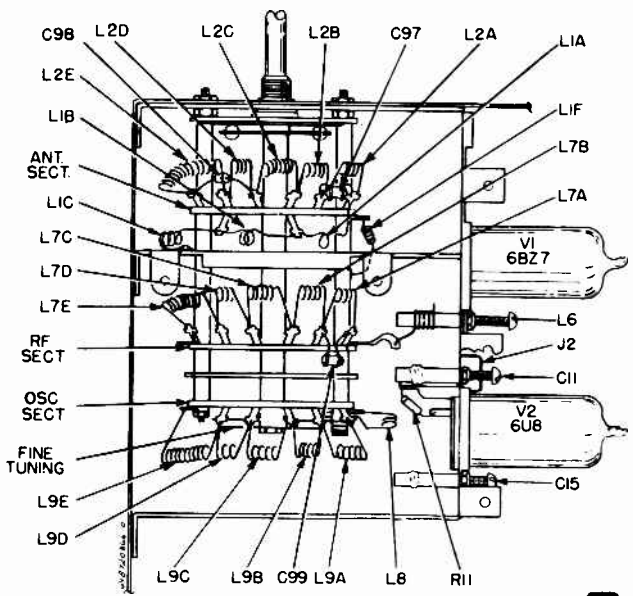

FIGURE 7. ANTENNA, RF & OSC LOCATIONS

MOTOROLA 1953 Models. Alignment Information, continued.

3. Remove shunt wire from oscillator.

4. Connect the oscilloscope to the cathode of the picture tube. Turn contrast control to maximum.

5. Turn the station selector switch to the low channel position which gives the lowest noise reading on the meter.

6. The signal required to produce 20 volts peak-to-peak on the scope should be less than 100 microvolts.

NOTE: To calibrate scope, connect it across the 6.3 volt filament supply. The peak-to-peak amplitude on the screen will then be approximately 18V (6.3 x 2.8).

IF SENSITIVITY MEASUREMENT

1. Move generator to jack J-3 feeding into the grid of the 1st IF tube (V-3, 6CB6).

2. Connect the electronic voltmeter, through a 100K decoupling resistor, across the video detector load resistor R-27 (4700).

3. The signal required to produce 1 volt on the voltmeter should be less than 750 microvolts.

ANTENNA, RF & OSCILLATOR ALIGNMENT

FREQUENCY CHART

Chan	Frequency	Picture	Sound	Oscillator
2	54-60	55.25	59.75	81.65
3	60-66	61.25	65.75	87.65
4	66-72	67.25	71.75	93.65
5	76-82	77.25	81.75	103.65
6	82-88	83.25	87.75	109.65
7	174-180	175.25	179.75	201.65
8	180-186	181.25	185.75	207.65
9	186-192	187.25	191.75	213.65
10	192-198	193.25	197.75	219.65
11	198-204	199.25	203.75	225.65
12	204-210	205.25	209.75	231.65
13	210-216	211.25	215.75	237.65

Equipment Required:

Sweep generator having:
1. Frequency range 40-220 mc
2. 10 mc sweep width
3. Output constant and adjustable
4. Adjustable markers (markers should be calibrated occasionally by checking against an accurate signal generator).

AM Signal Generator having:
1. Frequency range 40-220 mc
2. Accurate frequency and attenuator calibration
3. 400 cycle, AM modulation

Oscilloscope: Preferably one with a calibrated input attenuator.

ANTENNA & RF ALIGNMENT PROCEDURE

1. Remove the horizontal output tube V-15, to eliminate RF interference in the oscilloscope. Connect a 5000 ohm 10 watt resistor between the red B+ bus and chassis to normalize the bus voltages.

2. Detune the oscillator by placing a shunt wire across the oscillator inductance (from position 2 to position 13 on the bandswitch).

3. Remove the antenna lead-in from the chassis, and connect the sweep generator to the antenna receptacle. Keep the leads from the generator to the socket short. Use internal markers or an accurately calibrated external signal generator for markers.

4. Connect the oscilloscope, through a decoupling resistor of 47K ohms to jack J-2 in the grid circuit of the mixer tube V-2B. See Figure 7.

5. Ground the AGC lead to the mixer and RF stages by moving the area selector switch to the suburban or fringe position.

6. Refer to Figure 7 for the location of the trimmers and coils. The chart listed above gives the picture and sound carrier frequencies.

7. The antenna coils are tuned to the video carrier side and the RF coils are tuned to the sound carrier side. Figure 8 shows the shape of the curve which should appear on the oscilloscope.

8. Set the screw in channel 13 RF coil, L-6, midway in the coil.

9. Turn the station selector switch to channel 8. Set the center frequency of the sweep generator to the center frequency of channel 8 (183 mc).

10. Adjust ceramic trimmer, C-11, so that the video and sound markers appear on the response curve within the limits shown in Figure 8.

NOTE: The two impedance matching transformers, T-1 and T-2 must be a minimum of 1/4" apart or a "suck-out" will be noted on channel 12 or 13.

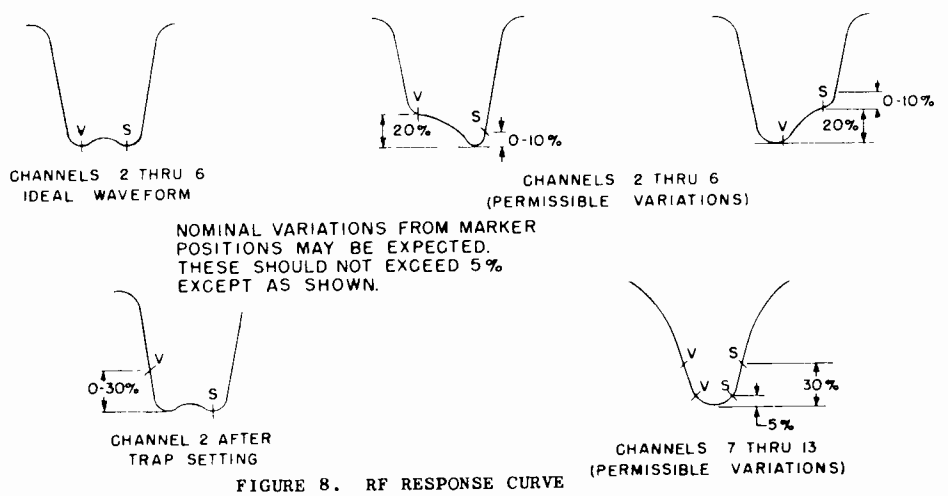

FIGURE 8. RF RESPONSE CURVE

MOTOROLA 1953 Models. Alignment Information, continued.

11. Move the station selector switch to channel 13, and set the generator to the center frequency of the channel (213 mc). Adjust the screw in coil L-6 for the proper response on channel 13 (see Figure 8).

12. Recheck channel 8 for proper response. Readjust trimmer C-11, if necessary.

13. Check channels 13 through 7 and compare the curves in Figure 8. It is important that the antenna primary coil (L-1F) is not changed. The wave shapes may be narrowed by reducing the inductance in the coil but the signal-to-noise ratio will be seriously affected.

NOTE: If the response is checked with the cover on the tuner, the picture marker will move up the left side of the curve a short distance, but the markers should be within tolerance.

14. Move the station selector switch to channel 6 and set the generator to the center frequency of the channel (85 mc).

15. Compress or spread the channel 6 antenna coil, L-2E, and RF coil, L-7E, to obtain the proper response. See Figure 7 for coil locations and Figure 8 for response curve. The antenna coil affects the video carrier and the RF coil affects the sound carrier.

NOTE: The tilt on the low channels, particularly channels 5 and 6, can be controlled by adjusting the antenna matching coil, L-1C.

16. Align channels 5 through 2, in that order, in the same manner as channel 6. As the coils are in series, the proper phasing of channel 6 will simplify the alignment of the lower channels. On one of the lower channels, check that the same waveform is obtained with the sweeper head reversed. Waveform deviations indicate a faulty coil.

CAUTION: Make certain the bandswitch is on the correct channel before checking bandpass.

17. With channel selector on channel 2, adjust the two traps formed by C-97 & C-99 across L-2A and L-7A, respectively. Proceed as follows:

a. Move the oscilloscope to the picture tube cathode (yellow lead), and connect an AM generator, set at 104.7 mc and modulated 30%, to the antenna input.

b. With the contrast control at maximum gain (fully clockwise), adjust the fine tuning control for maximum amplitude on scope.

c. Adjust coils L-2A and L-7A (by spreading or compressing) for minimum amplitude on scope. These coils can be reached with the tuner cover on through two holes in the cover.

d. To check rejection of 104.7 mc, set the generator output high enough so that a 20 volt peak-to-peak wave appears on the scope. Note the generator output reading.

e. Tune the generator to 57 mc, tune fine tuning trimmer for maximum amplitude on scope, and adjust the generator output to give a 20 volt peak-to-peak wave on the scope. Again note the generator output reading.

f. Using figures noted in steps (d) and (e), divide using formula shown in step (g).

g. For proper rejection,

$$\frac{\text{generator output at 104.7 mc}}{\text{generator output at 57 mc}} = \text{at least } 6000$$

h. If voltage ratio in (g) is less than 6000, repeat steps (a) through (g).

OSCILLATOR ADJUSTMENT

1. Remove shunt wire from oscillator inductance.

2. Connect the oscilloscope, through a 47K ohm resistor, across the video detector load resistor R-27 (4700). Restore AGC to the mixer and RF tubes by placing the Area Selector Switch into LOCAL position.

3. Refer to Figure 7 for the locations of the trimmers and coils. The sound carrier frequencies may be obtained from the preceding chart.

4. Set fine tuning trimmer for mid-capacity.

5. Turn station selector switch to channel 10.

6. Set the sweep generator to channel 10, with a center frequency of 195 mc. Keep the output low enough to show no evidence of limiting in the overall response curve.
NOTE: The curve should be substantially that of the mixer as in Figure 6. Any consistent tilting of the response curve indicates that the mixer and IF stages are not properly aligned.

7. Introduce a marker corresponding to the sound carrier of channel 10 (197.75 mc). Keep marker signal as low as possible.

8. Adjust the oscillator trimmer C-15 to place the sound marker slightly higher in frequency than the 21.9 mc trap dip. This allowance must be made for the shift caused by the bottom shield being off. When the shield is replaced, the sound marker will move down into the trap dip. The picture marker will then be approximately one-half down from the base line on the opposite side of the curve.

9. Check channels 7 through 13, noting whether the sound marker falls just above the trap dip, with the fine tuning trimmer at approximately mid-capacity.

10. If more than a 30 degree change in the fine tuning trimmer was needed in step 9, adjust the channel 13 oscillator coil L-8 by spreading or compressing the turns. If L-8 is adjusted, it may be necessary to readjust trimmer C-15 on channel 10. Coil L-8 has more effect on channels 10 to 13 than on channels 7 to 9.

11. Turn the station selector switch to channel 6, and set the sweep generator center frequency to 85 mc.

12. Set the fine tuning trimmer to 15° off mid-capacity (toward less capacity) as in Figure 9.

NOTE: It is important that the rotor be set as nearly as possible to the drawing. Otherwise, the fine tuning trimmer may not have sufficient range to suitably tune a weak signal.

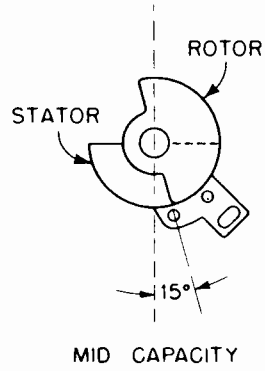

FIGURE 9. FINE TUNING TRIMMER SETTING

MOTOROLA 1953 Models. Alignment Information, continued.

13. Introduce a marker corresponding to the sound carrier of channel 6 (87.75 mc).

14. Compress or spread the channel 6 oscillator coil L-9E until the sound marker is placed just above the dip in the 21.9 mc trap.

15. Align channels 5 through 2, in that order, in the same manner as channel 6, so that the sound marker falls just above the trap dip, with the fine tuning trimmer within 15 degrees of initial setting in step 12.

NOTE: Since the oscillator coils are in series, it is necessary to adjust the high channel coils first, before proceeding to a lower channel.

OVERALL SENSITIVITY MEASUREMENTS

An overall measurement of sensitivity is made as follows:

1. Connect an AM signal generator to the antenna receptacle on the receiver chassis, matching the generator to the receiver with a resistor network. In the case of a generator with a 50 ohm output impedance, insert a 100 ohm resistor in series with the output terminal, and a 150 ohm resistor in series with the ground terminal.

2. From the cathode of the picture tube (yellow lead) to chassis, connect a calibrated oscilloscope. NOTE: To calibrate scope, connect it across the 6.3 volt filament supply. The peak-to-peak amplitude on the screen will then be approximately 18V (6.3 x 2.8).

3. Set the contrast control for maximum sensitivity (fully clockwise).

4. Set the signal generator for 30% modulation at 400 cycles, tune it to the mid-carrier frequency of the channel being checked, and rotate the fine tuning trimmer for maximum output.

5. The generator signal necessary to produce 20 volts peak-to-peak on the scope should be less than:

a) 20 microvolts for channels 2 through 6
b) 30 microvolts for channels 7 through 13

4.5 MC TRAP ALIGNMENT

Equipment Required:

AM Signal Generator:	Accurately calibrated at 4.5 mc Adjustable output
DC Meter:	Low range electronic voltmeter

Procedure:

1. Connect the signal generator to pin 3 of test receptacle, J-4.

2. Set CONTRAST control for maximum gain (fully clockwise).

3. Connect the voltmeter and a germanium crystal detector, as shown in Figure 10, between the cathode of the picture tube (yellow lead) and chassis.

4. With the signal generator accurately set at 4.5 mc and maximum output, adjust trap L-17 for minimum reading on the lowest voltage scale of the meter.

AUDIO TAKE-OFF, INTERSTAGE COIL, & RATIO DETECTOR

Refer to Figure 4 for location of adjustments.

1. If possible, it is desirable to align the audio section from an actual station signal, since the 4.5 mc alignment frequency will be exact. To permit operation below the limiting level of the audio driver tube, for sharp alignment, the fine tuning trimmer should be turned off the station slightly so that there is between 6 and 8V as measured from one side of C-54 and chassis.

2. If a signal generator is used, tune it accurately to 4.5 mc, and adjust the output to approximately 5,000 microvolts. Connect the high side of the signal generator to pin 3 of the test receptacle and the low side to chassis. The following steps apply whether the station signal or signal generator is used.

3. From either side of electrolytic capacitor C-54 (10 mf) through a 10K ohm decoupling resistor, connect an electronic voltmeter to chassis.

4. Tune audio take-off coil L-20 for maximum reading on meter.

5. Tune interstage coil L-21 for maximum reading on meter.

NOTE: As adjustments are brought to resonance, it is advisable to reduce the signal generator output to prevent overloading.

6. Tune ratio detector (T-7) primary (top core) for maximum reading on meter.

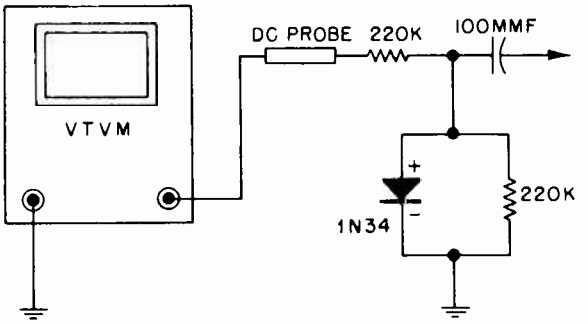

FIGURE 10. ELECTRONIC VOLTMETER CONNECTIONS

NOTE: Both the primary and secondary of the ratio detector transformer have two tuning points. Only one, with the cores at the outer end of the windings, is the proper point.

7. Move the meter and decoupling resistor to the junction of R-45 (33K) and C-55 (1000 mmf).

8. Adjust T-7 secondary (bottom core) for zero response on the lowest scale of the meter. Be sure the slug is tuned to the outside of the winding (toward the top). This corresponds to the cross-over point of the FM detector curve. If desired, the symmetry of the curve may be checked by tuning the signal generator 25 kc above and below 4.5 mc and noting the plus and minus voltage produced, reversing the meter connections, as necessary. For proper balance of the ratio detector system, the voltages in each direction should be approximately equal. If not, check the tuning of L-20, L-21, and both the primary and secondary of T-7, the ratio detector transformer. If necessary, replace the ratio detector tube V-9.

9. Repeat steps 4 through 8 for maximum accuracy.

OLYMPIC RADIO & TELEVISION INC.

OLYMPIC TELEVISION RECEIVERS, CHASSIS TYPES TK AND TL

These models are nineteen tube direct viewing television receivers differing only in type of cabinet, size of speaker and their use in conjunction with a radio receiver and automatic record changer in the combination models. A 17" electrostatically focused rectangular tube (17HP4) is used in the 17" models and a 20" electrostatically focused rectangular tube (20HP4A) is used in the 20" models.

MODELS

		20T46	20C53
17T40	17K41	20T47	20D49
17T48	17K42	20C45	20K43
17C44	17K50	20C52	20K51

TO REMOVE CHASSIS FROM CABINET

Remove: (1) Line cord from power outlet
(2) Masonite back.
(3) Antenna Lead-in from terminal posts.
(4) Speaker plug from rear of chassis.
(5) Knobs from front of cabinet.
(6) Four mounting screws and washers from bottom of cabinet.

In 20" models the picture tube is mounted as a part of the cabinet and therefor the CR tube socket, the yoke plug and the high voltage connector will have to be disconnected before removing the chassis.

In sliding chassis out of cabinet, be careful that the kinescope tube does not strike against speaker or any other obstruction.

Before proceding it will be necessary to use an extra line (or "cheater") cord to supply AC current to the chassis as the set's line cord is attached to the masonite back of the cabinet.

IF ALIGNMENT PROCEDURE

After removing chassis from cabinet re-connect power speaker plugs, and Kinescope and yoke connections.

If a local station is not operating on Channel 9 set the tuner to this channel, turn on power switch and proceed as follows: (If 9 is a local station, use Channel 8 or 10.)

ACCOMPANYING SOUND TRAP

Insert a 100,000 ohm 1/2 watt resistor in series with the "Hot Lead" of the electronic voltmeter and connect to the junction of L7 and L8. Meter switch should be set to the lowest negative scale. Ground lead of meter should be connected to chassis.

Remove the shield of the RF Oscillator and Mixer tube (V2) from ground clips and connect hot lead of the RF Signal Generator to it. This will couple generator output to mixer plate.

Set the generator frequency accurately to 21.75 MC, and adjust (L6) sound trap (See Fig. 6 Tube and Trimmer Layout) for **minimum** reading on voltmeter.

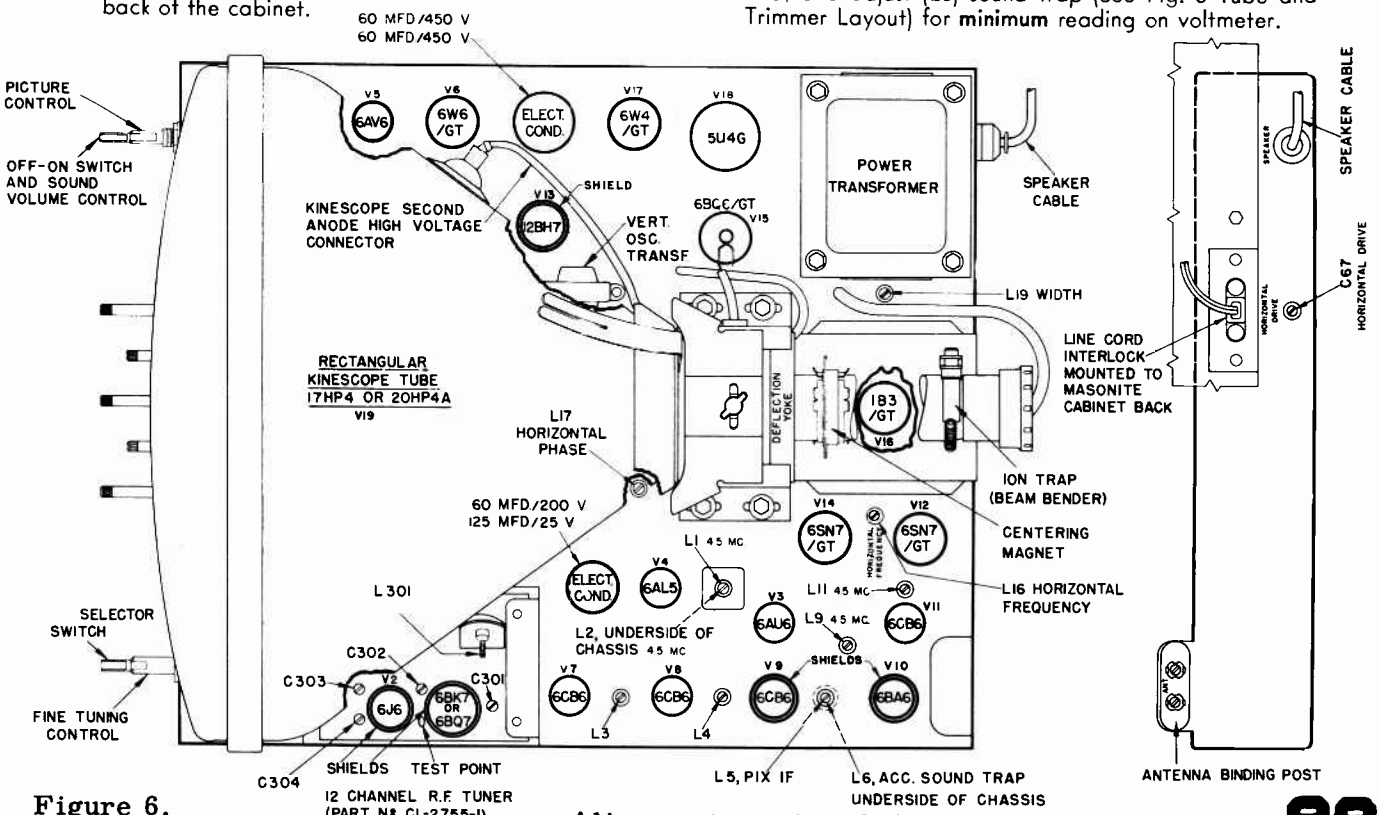

Figure 6.

Alignment continued on page 102.

OLYMPIC TK17 & TL20 CHASSIS

17" TK MODELS: 17T40, 17K41, 17K42, 17C44, 17T48 AND 17K50

20" TL MODELS: 20K43, 20C45, 20T46, 20T47, 20D49, 20K51, 20C52 AND 20C53

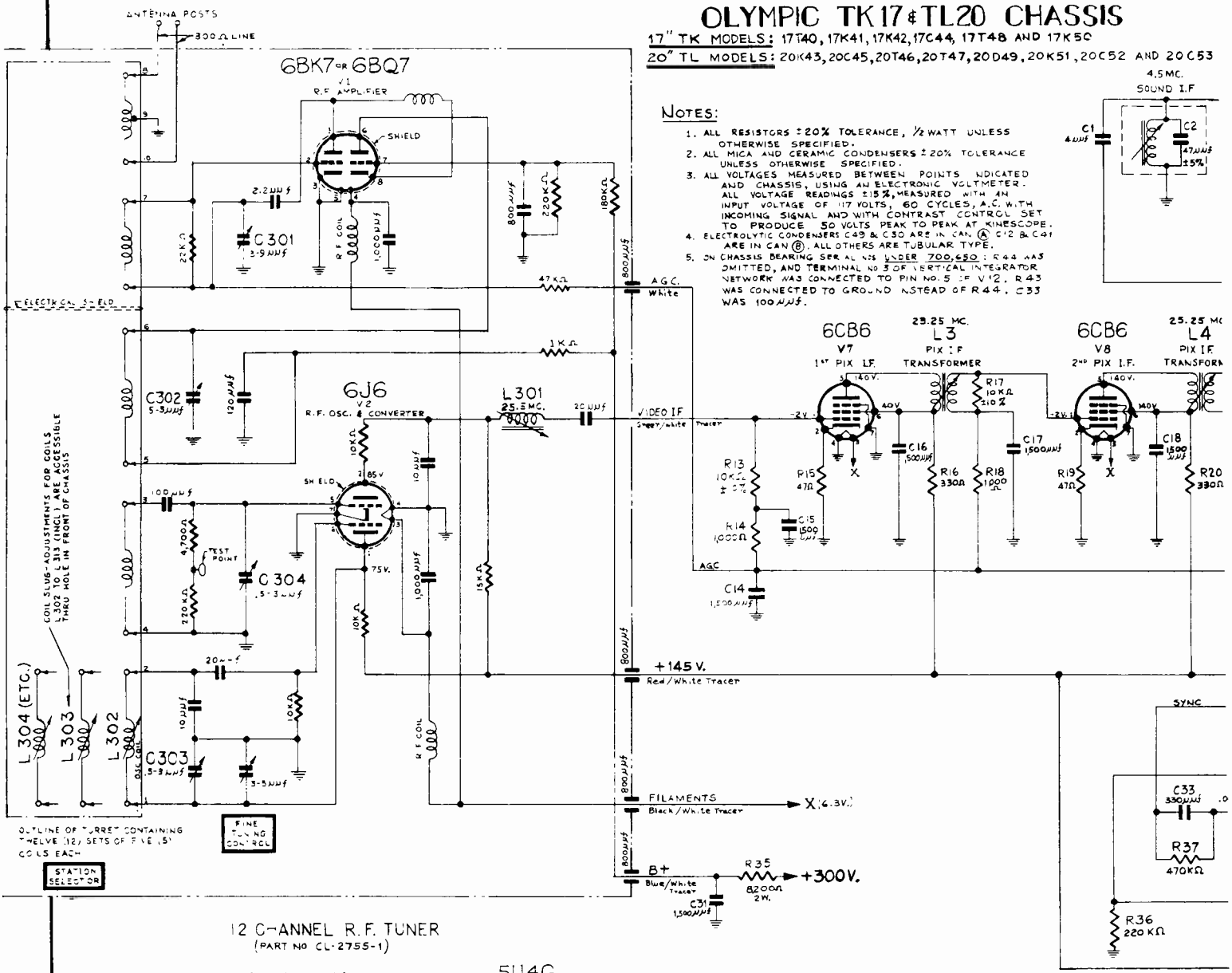

NOTES:

1. ALL RESISTORS ±20% TOLERANCE, ½ WATT UNLESS OTHERWISE SPECIFIED.
2. ALL MICA AND CERAMIC CONDENSERS ±20% TOLERANCE UNLESS OTHERWISE SPECIFIED.
3. ALL VOLTAGES MEASURED BETWEEN POINTS INDICATED AND CHASSIS, USING AN ELECTRONIC VOLTMETER. ALL VOLTAGE READINGS ±15%, MEASURED WITH AN INPUT VOLTAGE OF 117 VOLTS, 60 CYCLES, A.C. WITH INCOMING SIGNAL AND WITH CONTRAST CONTROL SET TO PRODUCE 50 VOLTS PEAK TO PEAK AT KINESCOPE.
4. ELECTROLYTIC CONDENSERS C49 & C50 ARE IN CAN Ⓐ. C12 & C41 ARE IN CAN Ⓑ. ALL OTHERS ARE TUBULAR TYPE.
5. ON CHASSIS BEARING SERIAL NOS UNDER 700,650: R44 WAS OMITTED, AND TERMINAL NO 3 OF VERTICAL INTEGRATOR NETWORK WAS CONNECTED TO PIN NO. 5 OF V12. R43 WAS CONNECTED TO GROUND INSTEAD OF R44. C33 WAS 100 μμf.

For alignment instruction see pages 99 and 102.

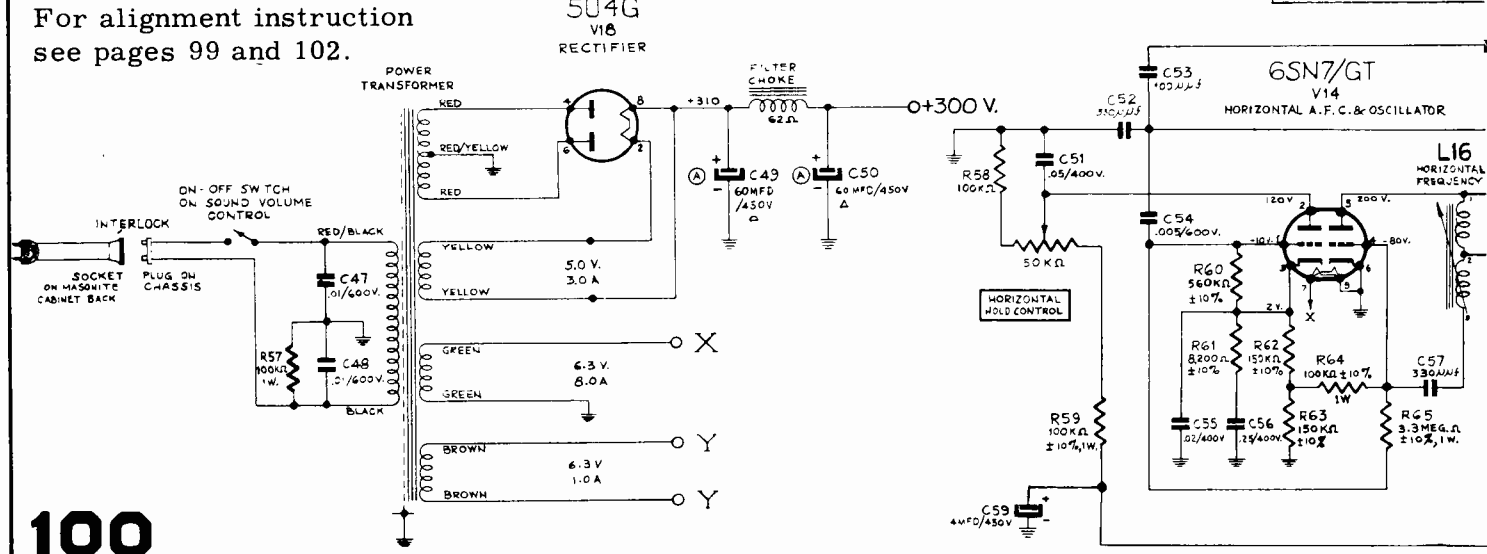

MOST-OFTEN-NEEDED 1953 TELEVISION SERVICING INFORMATION

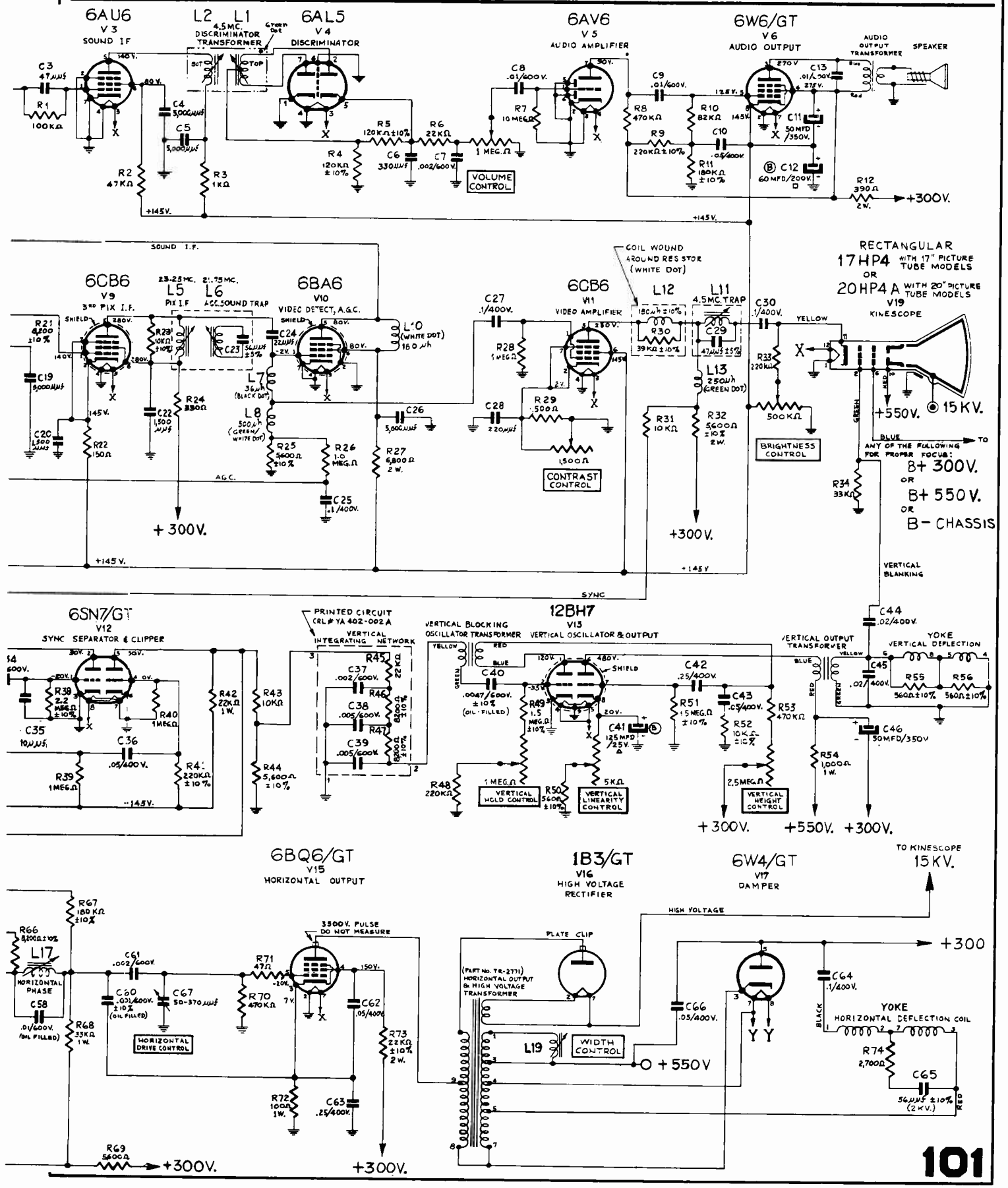

OLYMPIC Television Chassis Types TK and TL, Alignment continued.

PIX IF COIL ADJUSTMENT

Adjust the following slugs for maximum output at frequencies and sequence indicated with meter and generator connected as above:

L301	25.5 MC
L3	23.25 MC
L4	25.25 MC
L5	23.25 MC

If oscillation occurs during alignment, temporarily raise frequency of L3 by turning screw counter-clockwise until screw projects approximately ¾".

After properly adjusting L301, L4 and L5 reset L3 to proper frequency. Oscillation is evidenced by high reading on voltmeter (-5v to -20v) with signal generator OFF and no signal coming in through the antenna terminals.

Disconnect RF signal generator leads, connect hot lead of sweep generator through a 330 uuf condenser to test point on tuner and ground lead to chassis.

Connect vertical input terminal of oscilloscope to junction of peaking coils L7 and L8 and connect ground lead of scope to chassis.

Connect 1.5v flashlight battery with positive terminal to chassis and negative terminal to junction of R26 and C25. This point is origin of AGC bigs voltage. Set tuner to Channel 9 unless local station is operating on this frequency, in which case an adjacent channel should be used.

Set Sweep Generator frequency to IF sweep on the 20 to 30 MC range.

Adjust sweep generator output to produce a curve on the scope which is approximately 2/3 of the screen diameter.

Loosely couple output of RF signal generator by using shield on V2 and set frequency of RF signal generator to 26.25 MC (marker).

Curve shown on scope should be similar to the response curve shown in Figure 4. For proper setting of the pix carrier the 26.25 MC marker should appear on the curve at a point approximately 50% of the vertical height of the curve.

To obtain this setting retouch L301 and L4.

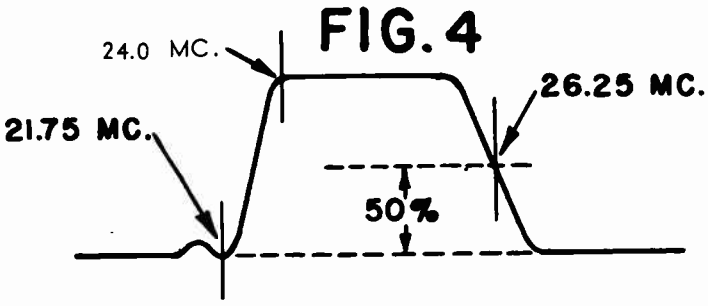

STANDARD RESPONSE CURVE

Reset RF signal generator frequency to 24.0 MC and retouch L3 and L5 for correct positioning of marker on shoulder of curve.

Recheck setting of 26.25 MC marker to make sure that position has not shifted on curve.

Disconnect bias battery.

Note: If the curve cannot be made to appear as above due to a local station or other interference, or if multiple markers appear, remove (V1-6BK7 or 6BQ7) RF tube from tuner.

4.5 MC TRAP ALIGNMENT

Connect voltmeter lead to Diode crystal rectifier as shown in Fig. 5. Connect Diode crystal rectifier between C.R. Tube Cathode lead (yellow wire) and chassis ground. Signal generator is connected at junction of the two peaking coils L7 and L8. Set contrast control at maximum and voltmeter to 3 volt scale (negative). Remove 6CB6 (V9) from socket. Use maximum output of generator at 4.5 MC. Adjust L11 trap for **minimum** reading on meter.

When it is necessary to retouch this trap in the field, proper adjustment can be made by using the local station signal and turning the Fine Tuning Control to bring fine herringbone sound beat into the picture. The 4.5 MC trap (L11) should then be adjusted to minimize this beat interference.

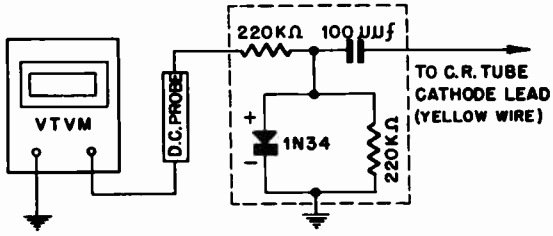

VOLTMETER AND CRYSTAL DIODE CONNECTIONS

FIG. 5

SOUND IF TRANSFORMER, (4.5 MC) AND DISCRIMINATOR ADJUSTMENT

In view of the fact that the transmitted sound signal from a TV station is probably the most accurate available, as far as frequency is concerned, it is recommended that a working signal be used for sound alignment. The set should be connected to an antenna, turned on, allowed to warm up for about 5 to 10 minutes and then tuned for the best picture. A vacuum tube voltmeter should be connected to the junction of R4 and R5 and the meter set to the minus 30 volt scale. The 4.5 MC Sound IF Transformer (L9) and the primary of the Discriminator (L2 — bottom of chassis) should be tuned for maximum deflection of the meter. The vacuum tube voltmeter should then be connected to the junction of R6 and C7 and one side of the volume control and the secondary of the discriminator (L1 — top adjustment) should be adjusted for a zero reading with the meter set to the 3 volt scale. The secondary can also be adjusted by ear by tuning L1 for the elimination of buzz in the sound.

Packard-Bell

Packard-Bell Television Models 2421, 2422, 2423, and 2822, are covered by the service material below and on the next three pages. Chassis used in each of these models are essentially the same. Major differences between chassis are picture tube size and additional components necessary for AM reception in Model 2822. This model uses a separate AM Chassis, while the television chassis is the same as 2423 except that it is designed for use in a combination model.

PRODUCTION MODIFICATIONS:

Although the frequency response of these models is not as wide as the 26 tube series, some overshoot or halo effect is noticed on some stations. This can be reduced by clipping (C24) 330 mmf from the cathode of the 2nd video amplifier to ground. Due to the physical layout of the 24 tube chassis it has been possible to bring a lead from (C24) 330 mmf capacitor to the top of the chassis near the low voltage power transformer where it is grounded. Clipping this wire will remove the capacitor from the circuit without the necessity of removing the chassis from the cabinet.

During early production some difficulties were experienced with a form of lockout which was caused by the wide variation in grid cut-off voltage encountered with electrostatic tubes. On some tubes where the grid cut-off was in the vicinity of 35 to 45 volts, advancing the contrast control beyond normal would make the grid of the picture tube draw current. This in turn reduced the high voltage, thereby reducing the keying pulse below normal for the keyed AGC. When this happened the IF strip was running wide open which aggravated the situation even more. To compensate for this condition a 100K resistor was inserted between the arm of the brightness control and the picture tube cathode.

This form of cathode-limiting controls the amount of current that can be drawn by the plate of the picture tube without affecting the high voltage regulation.

Vertical Oscillator Buzz:

Due to the spacing between the 6J5 vertical oscillator and the 6V6 audio output, a few reports of 60 cycle buzz have been cured by replacing a glass 6J5 with a metal tube. This condition was most noticeable when set was not on station.

Width Reduction and Improved Keying Pulse:

In some areas where high line voltages are encountered, excessive width has been reported which could not be compensated for by setting the horizontal drive control. All production after 4/15/52 has incorporated the change as shown below to give a further reduction in width. In conjunction with this modification a change was made in connections to the high voltage transformer. The junction point of C-44 .05 mmfd and R-73 5600 ohms was moved from tap #3 to #1. This changes the turns ratio with reference to the keying pulse tap thereby increasing the keyed pulse for the keyed AGC about 75%. This makes the keyed AGC much more stable under varying line voltage conditions.

LOCATING TROUBLE BY PICTURE TUBE OBSERVATION:

A great percentage of circuit failures may be easily isolated by observing certain visible characteristics present in the picture. The following are hypothetical trouble cases and the probable cure.

No Raster On Picture Tube:

1. Incorrect adjustment of Ion Trap Magnet.
2. V-15, V-17, V-20, V-21 defective, check voltages and associated components.
3. V-14 defective (no horizontal drive); change tube then check voltages and components.
4. Check horizontal sweep waveforms.
5. No high voltage; check T-2 for defects.
6. Blown fuse; if fuse continues to blow out, check for short in B boost voltage.
7. Defective picture tube or picture tube socket.

Picture Stable But Poor Resolution:

1. V-11 may be defective. Change tube and check voltages and associated circuit components.
2. Check Centering Magnet for proper adjustment.
3. R-F or I-F Circuit improperly aligned.
4. Check video peaking coils (open or shorted).

Weak Raster:

1. Low B plus or line voltage.
2. V-21 defective; change tube then check voltages.
3. V-15, V-17, V-20 defective; change tubes then check voltages and associated circuit components.
4. Power transformer defective; check plate winding.
5. Check filter capacitor (short or drawing excessive current).

Picture Jitter:

1. If regular sections of the left picture are displaced V-15 may be defective; check voltages.
2. Check for loose connections or noise.

Poor Vertical Linearity:

1. Incorrect adjustment of Vertical Linearity Control.
2. Vertical Output Transformer defective.

No Horizontal Deflection:

1. Horizontal Deflection Coil open.

No Vertical Deflection:

1. V-19 defective; change tube then check voltages and associated components.
2. Vertical Deflection Coil open.

Packard-Bell Models 2421, 2422, 2423, Schematic Diagram.

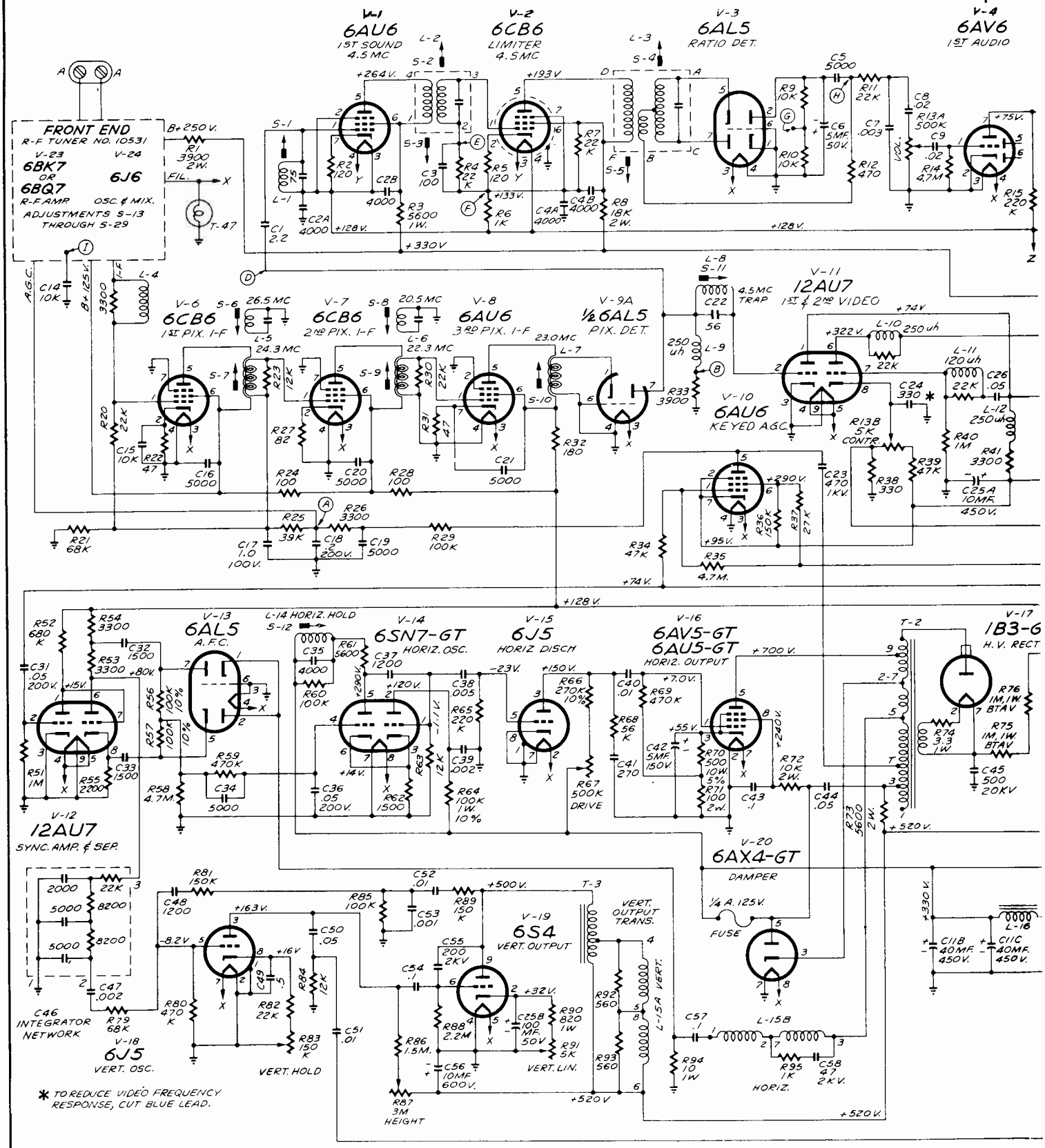

PACKARD-BELL SCHEMATIC MODEL 2421, 2422, 2423

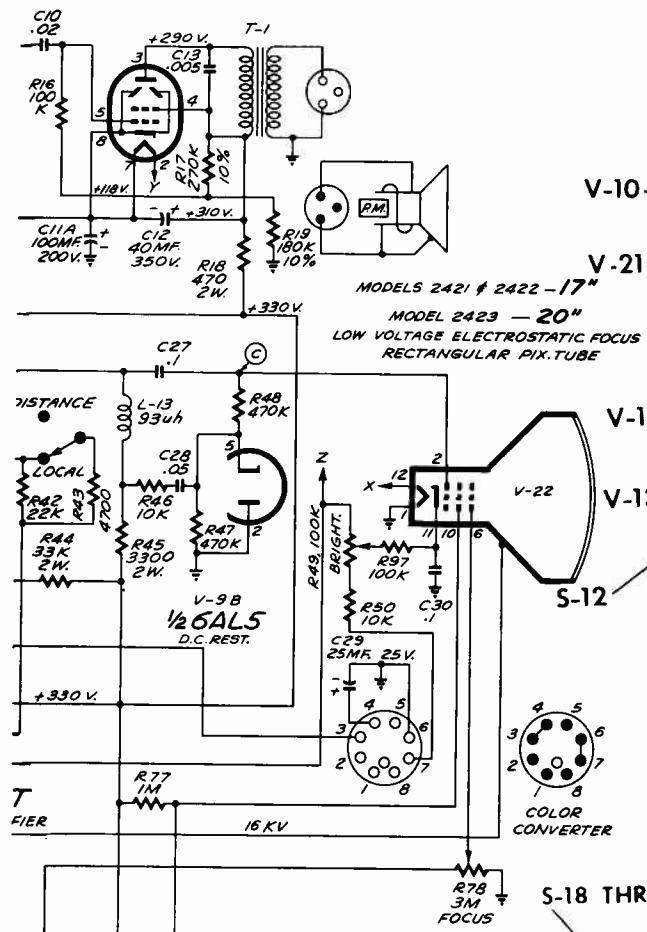

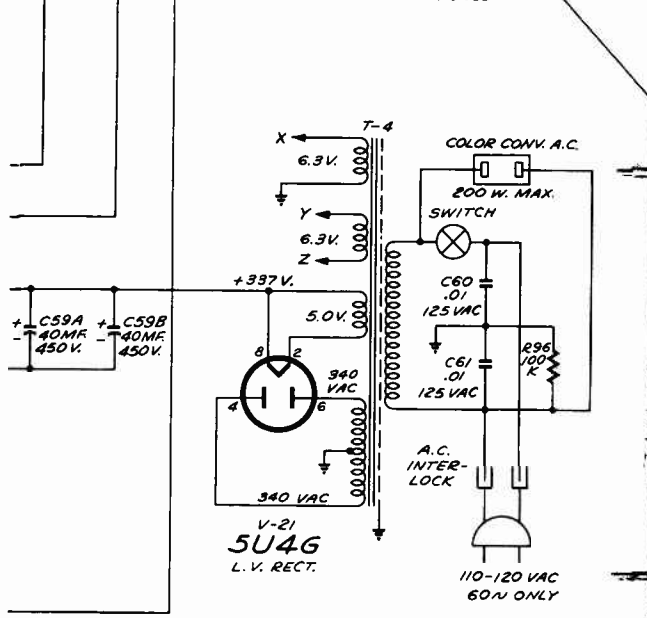

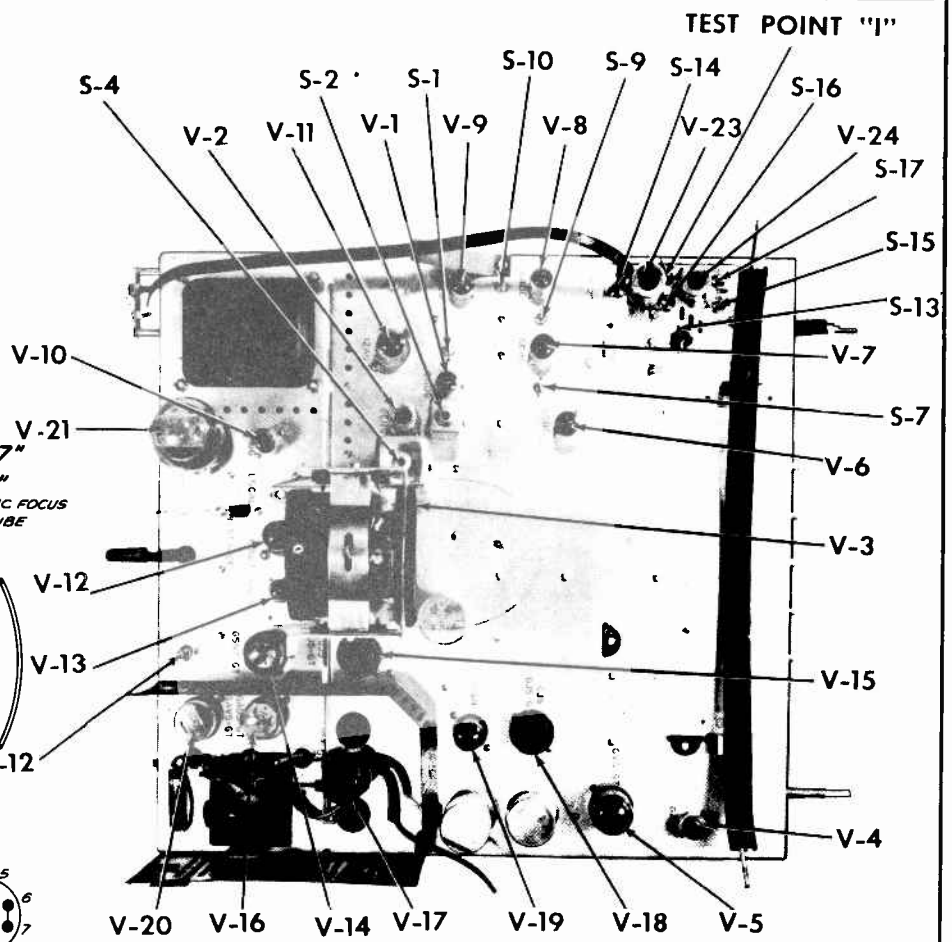

Top View of Television Chassis

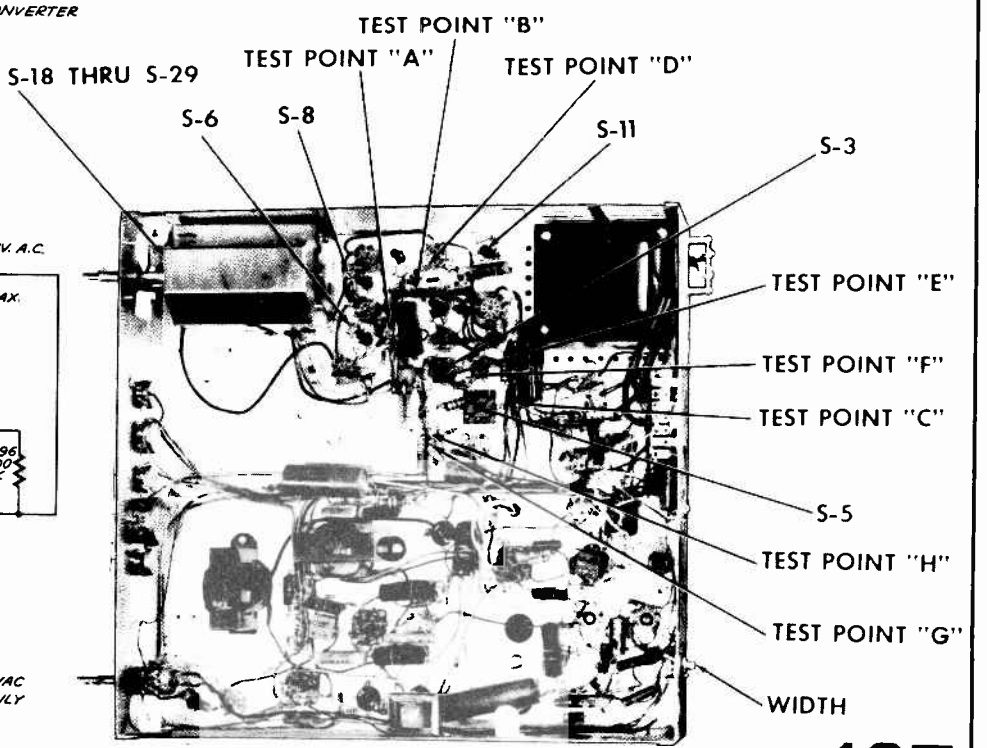

Bottom View of Television Chassis

ALIGNMENT INSTRUCTIONS Packard-Bell Models 2421, 2422, 2423, 2822.

GENERAL:

The majority of realignment cases in the field, generally speaking, require only slight readjustments which can be accomplished by aligning the picture I-F response curve on the oscilloscope alone. If, however, complete realignment is necessary, the service technician should follow the step by step instructions carefully.

It will be noted that the sweep generator is fed in through the antenna terminals. This being the case, it is imperative that steps be taken to match its output impedance with the 300 ohm antenna input impedance. At the factory a Sylvania Type 500 sweep generator was used. The service technician will be obliged to determine the output impedance of his generator. The instruction manuals which accompany these units will, in all probability, provide this information.

The signal generator is loosely coupled to the converter tube. This is accomplished by merely "lifting" the tube shield from ground and connecting the signal generator to it.

LOCATIONS OF TEST POINTS ARE SHOWN ON THE SCHEMATIC DIAGRAM.

PICTURE I-F ALIGNMENT:

1. Connect VTVM between Point A and ground.
2. Loosely couple (See General Instructions) signal generator to converter tube and adjust for maximum output. Set to frequencies shown in following two steps.
3. Adjust 20.5 MC (S-8) trap for minimum reading on VTVM.
4. Adjust 26.5 MC (S-6) trap for minimum reading on VTVM.
5. Set signal generator to 21.8 MC and adjust converter I-F trimmer (on tuner) for maximum reading on VTVM. Signal generator output should be sufficient to produce a reading of 2.5 to 3 volts on VTVM.
6. Set signal generator to 24.3 MC and adjust 1st Pix I-F (S-6) as above.
7. Set signal generator to 22.3 MC and adjust 2nd Pix I-F (S-9) as above.
8. Set signal generator to 23.0 MC and adjust 3rd Pix I-F (S-10) as above.

   AT THIS POINT RECHECK ALL PRECEDING STEPS.

9. Disconnect VTVM.
10. Connect oscilloscope to Point B.
11. Connect sweep generator to antenna terminals (See General Instructions).
12. Rotate tuner to any low frequency channel and set sweep generator to center frequency of channel used; 10 MC sweep width.
13. With signal generator loosely coupled to the converter tube, adjust to provide markers shown on the response curve. (Check the position of the markers one at a time.)
14. Observe the waveform obtained on the oscilloscope; compare it with the waveform shown in Figure 1. Slight retouching of the I-F adjustment may be necessary.

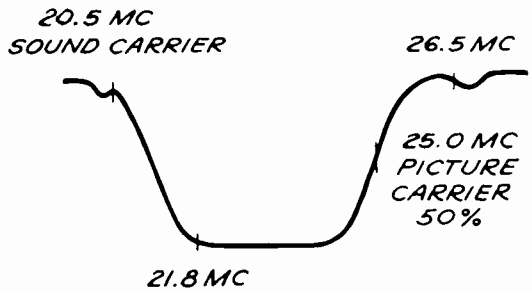

Figure 1. I-F Response Curve

a. The 20.5 and 26.5 MC markers will be at minimum response.
b. The 25.0 MC marker will be at 50% response.
c. The 21.8 MC marker will be at 100% response.

4.5 MC TRAP ALIGNMENT:

1. Connect an R-F VTVM between Point C and ground.
**2. Connect signal generator between Point B and ground.
3. Set signal generator to 4.5 MC (Exact) with an output of approximately 2V.

**If the service technician does not have a signal generator capable of 2 volts output, it will be necessary to adjust the trap by visual means; observe the picture and adjust the trap to eliminate the 4.5 MC beat.

SOUND I-F AND RATIO DETECTOR ALIGNMENT:

1. Connect signal generator between Point D and ground.
2. Connect VTVM between Points E and F.
3. Adjust 1st and 2nd sound I-F (S-1, S-2, S-3) to 4.5 MC observing VTVM for maximum output.
4. Connect VTVM between Point G and ground.
5. Adjust Ratio Detector Primary to 4.5 MC (S-5) observing VTVM for maximum output.
6. Connect VTVM between Points G and H.
7. Adjust Ratio Detector (S-4) secondary to zero between positive and negative peaks.

LOCATING TROUBLE BY PICTURE TUBE OBSERVATION: (Continued from page 103)

Insufficient Width:

1. V-21 defective; change tube then check for adequate B plus voltage.
2. Defective power transformer; check plate winding.
3. V-15, V-17 defective; change tubes then check voltages.
4. Defective Horizontal Output Transformer.
5. Check horizontal sweep waveforms.

Non-Symmetrical Raster:

1. Check Ion Trap and Centering Magnet adjustments.
2. Defective yoke assembly.
3. Check Vertical Adjustment.

PHILCO CORPORATION

Various Philco models of this period were made in the form of dual chassis. The Deflection Chassis employed contained power and sync circuits, while the R.F Chassis contained the balance of circuits. Models that were changed from one type of chassis to another during production have a different code number and are so listed in the table below at left.

MODEL	CODE	R-F CHASSIS	DEFLECTION CHASSIS
52-T1802*	124	71	G-1
52-T1821	124	71	G-1
52-T1822	124	71	G-1
52-T2120	124	71	G-1
52-T2150W	124	71	G-1
52-T2151	124	71	G-1
52-T2252	124	71	G-1
53-T1824	123	81	H-1
53-T1824	124	71	G-1
53-T1825	123	81	H-1
53-T1825	124	71	G-1
53-T1826	123	81	H-1
53-T1826	124	71	G-1
53-T1827	126	91	J-1
53-T1852	124	71	G-1
53-T1853	126	91	J-1
53-T1883	123	84	H-4
53-T1883	125	44	G-4
53-T1884	123	84	H-4
53-T1884	125	44	G-4
53-T1886	123	84	H-4
53-T1886	125	44	G-4
53-T2125	123	81	H-1
53-T2125	124	71	G-1
53-T2126	125	42	G-2
53-T2127	126	91	J-1
53-T2152	123	81	H-1
53-T2152	124	71	G-1
53-T2183	123	84	H-4
53-T2183	125	44	G-4
53-T2227	123	81	H-1
53-T2228	126	91	J-1
53-T2260	123	81	H-1
53-T2260	125	42	G-2
53-T2262	125	42	G-2
53-T2264	123	81	H-1
53-T2264	125	42	G-2
53-T2266	126	91	J-1
53-T2268	126	91	J-1
53-T2269	126	91	J-1
53-T2270	126	91	J-1
53-T2271	126	91	J-1
53-T2272	123	81	H-1
53-T2273	126	91	J-1
53-T2285	126	94	J-4
53-T2286	126	94	J-4
53-T2287	126	94	J-4

*52-T1802, Code 123, is in TV-6, 1952 TV manual.

To find the service material you need, first look up below at left the model number with the correct code reference of the set you are servicing, and the corresponding listing in the table will tell you what R.F. and Deflection Chassis are used.

After looking up what R.F. and Deflection Chassis are used, see the list below for reference to pages in this manual where this information is presented.

Deflection Chassis No. — Page

- G-1 110
- G-2 and G-4 are similar to G-1
- H-1 111
- H-4 is similar to H-1
- J-1 116
- J-2, J-4, J-5 are similar to J-1

R.F. Chassis No.

- 42 similar to 41 in 1952 TV manual
- 44 is in 1952 TV manual
- 71 108-109
- 81 112-113
- 84 is similar to 81
- 91 114-115
- 94 is similar to 91

The additional models listed below have a prefix 53-T or AT- and use some of the chassis covered in this manual:

		2279
1814	1888	2280
1816	2230	2281
1817	2232	2288
1818	2 233	2289
1856	2 234	2290
1858	2274	2292
1887	2 277	2294

Alignment information given on pages 117 to 124 applies to all these models, and any differences are covered by additional text. The material on Philco TV sets in this manual is reproduced through the co-operation and courtesy of the Philco Corp.

PHILCO Chassis 71, Schematic Diagram

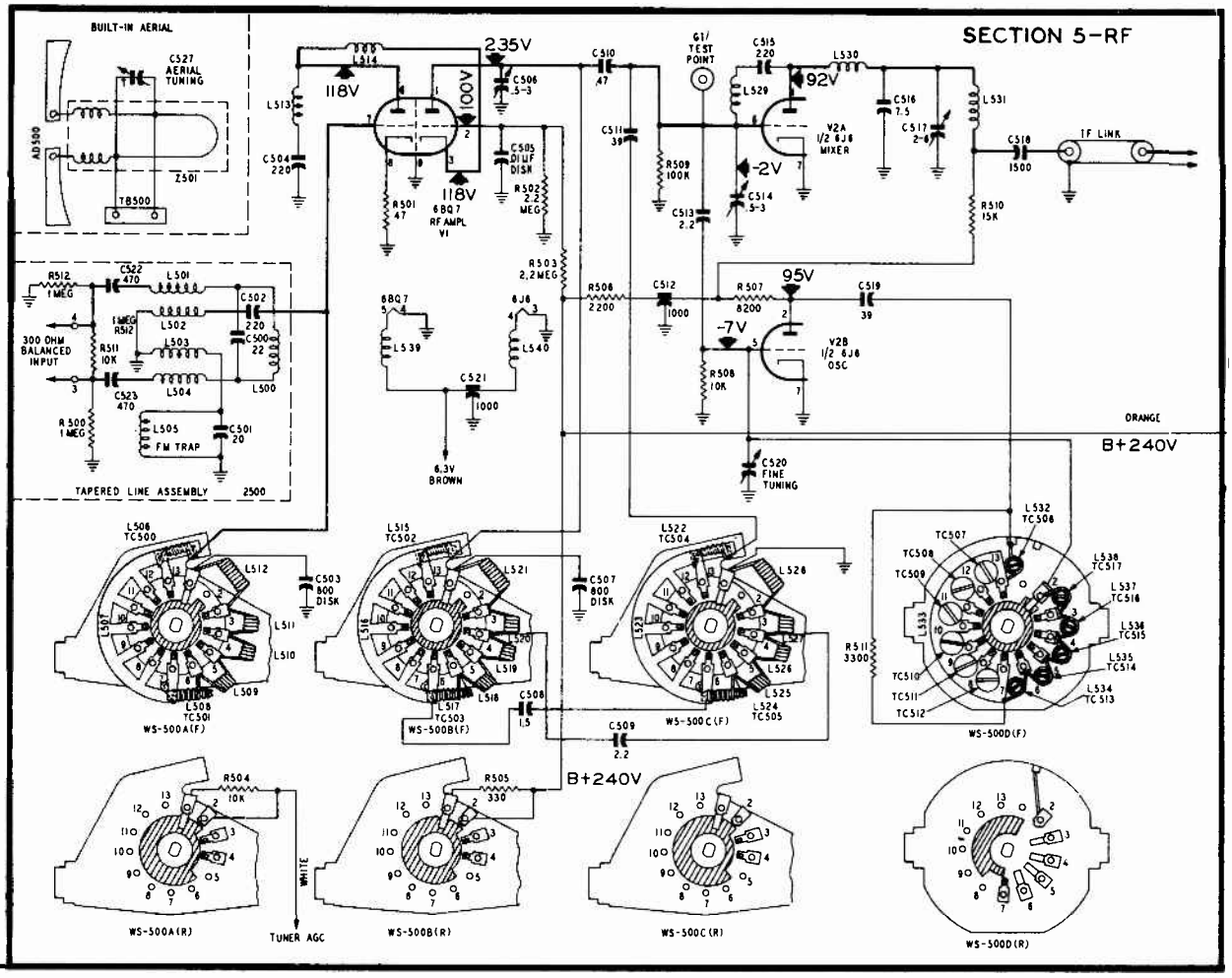

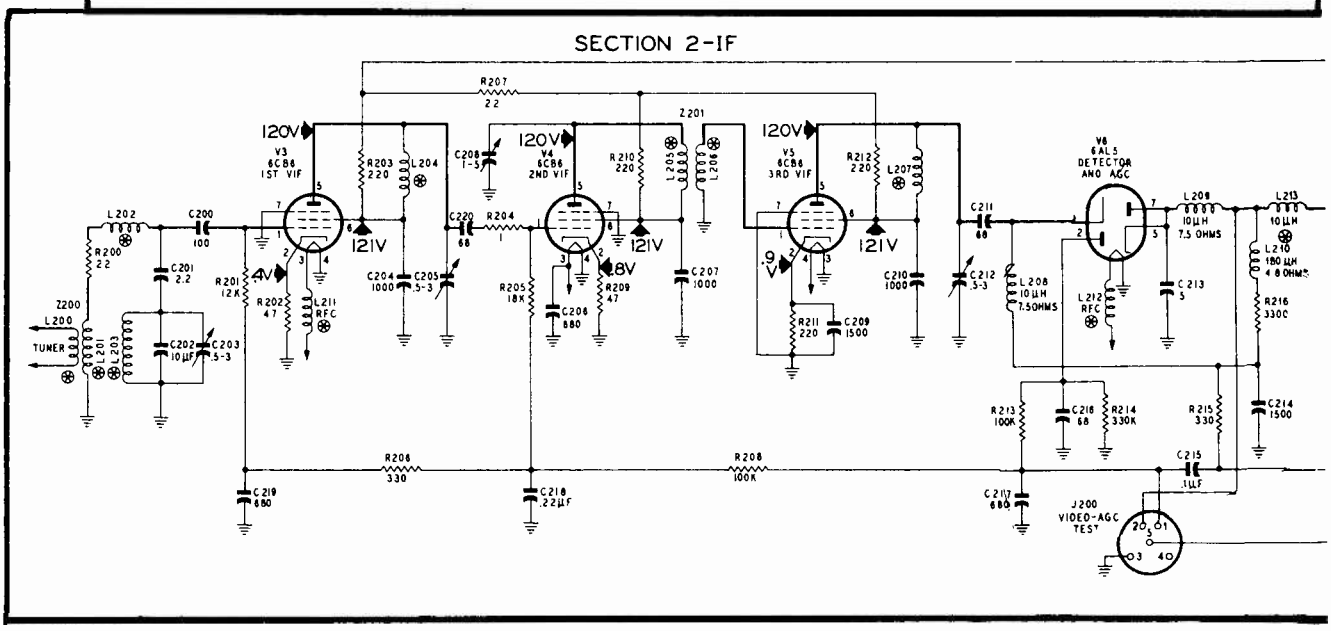

Chassis 71, Runs 3TS, 4S, and 5, Schematic Diagram

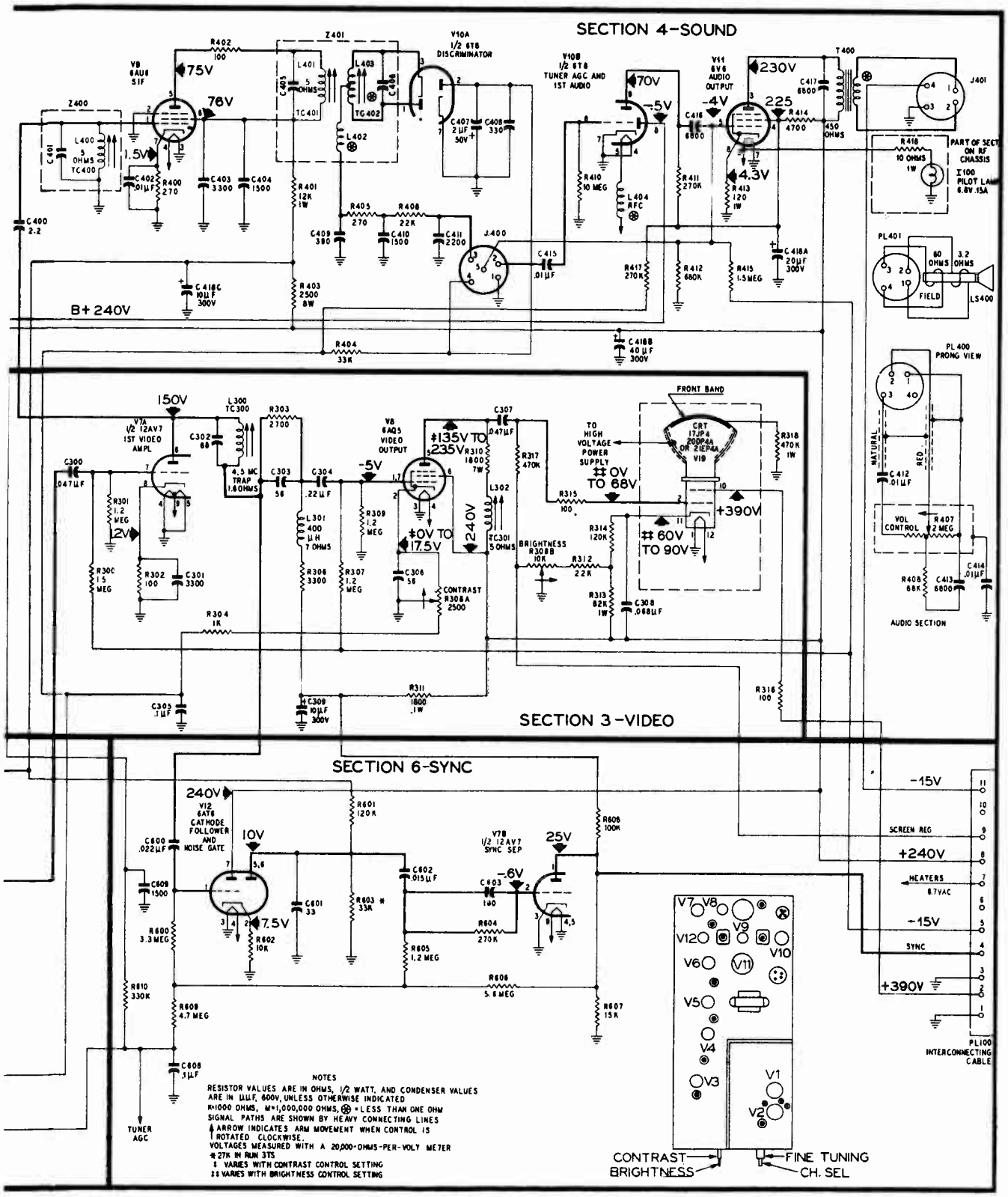

PHILCO Deflection Chassis G-1 (G-2 and G-4 are similar)

The video-output peaking coil, L302, is adjusted at the factory for proper transient response of the video amplifiers. Ordinarily this coil will require no further adjustment by the serviceman. On some stations, where excessive overshoot or excessive smear is present, however, a slight adjustment of L302 may improve the picture quality on that station, but at a possible sacrifice of quality on other channels.

Before adjusting L302, check the tuner alignment and i-f alignment. (Never adjust L302 until the alignment of the receiver is correct.) Then tune in a station and adjust L302 so there are no trailing whites or smear in the picture. Turning TC301 clockwise reduces trailing whites and overshoot; turning TC301 counterclockwise reduces picture smear and increases trailing whites.

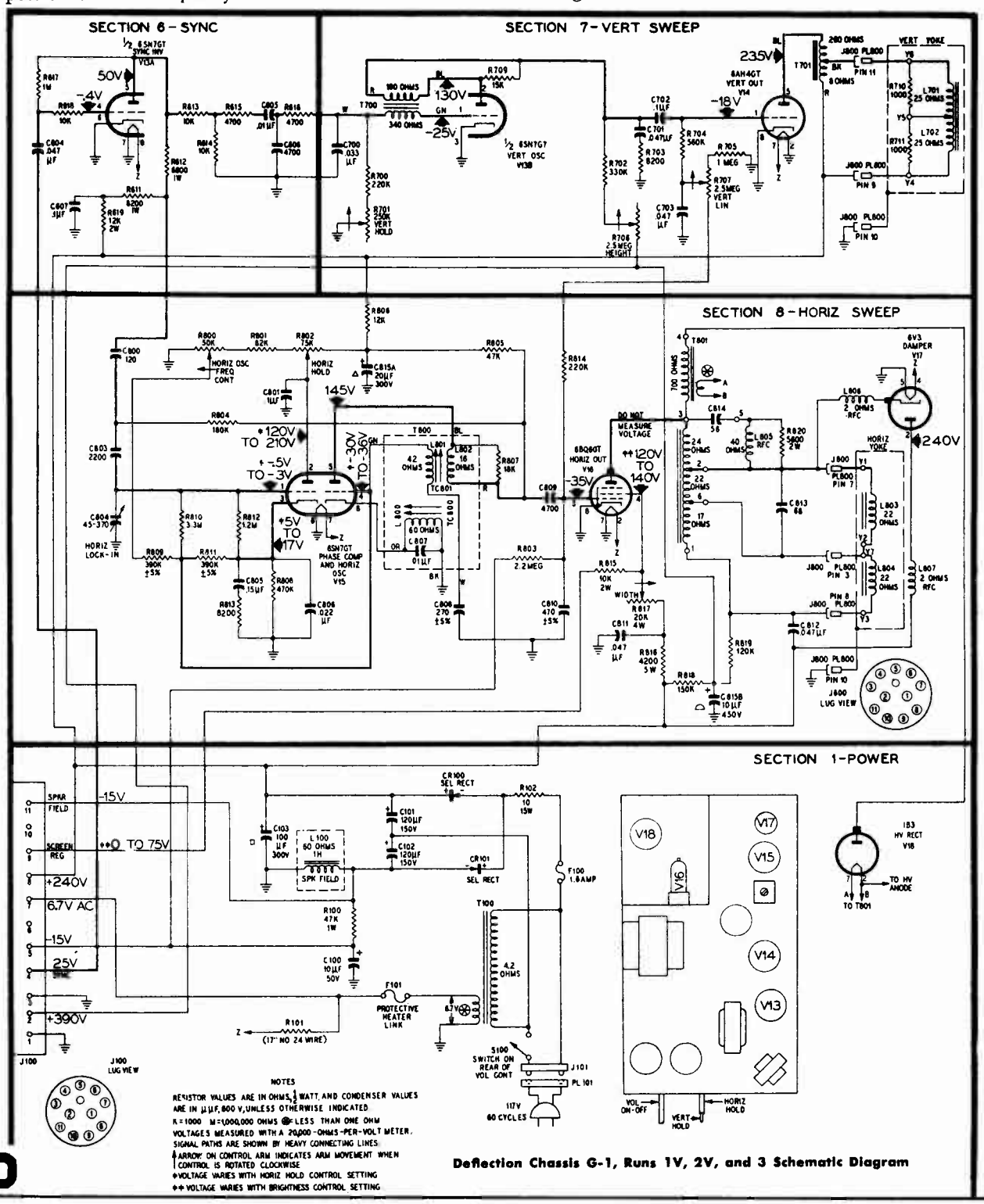

Deflection Chassis G-1, Runs 1V, 2V, and 3 Schematic Diagram

PHILCO Deflection Chassis H-1

Mixer Jig

Connections to the grid of the mixer tube may be made through the alignment jack provided for that purpose. To connect the generator to this point, a mixer-grid jig, Philco Part No. 45-1739, and a connecting cable, Philco Part No. 45-1635, may be used. As an alternate, a Philco alligator-clip adapter, Part No. 45-1636, with as short a ground lead as possible, may be used to connect the alignment jack. The ground lead should be connected as close as possible to the mixer tube. It is essential that the signal-generator output lead be terminated with a 68-ohm resistor (carbon), so that regeneration, caused by connection of the lead to the mixer, is held to a minimum.

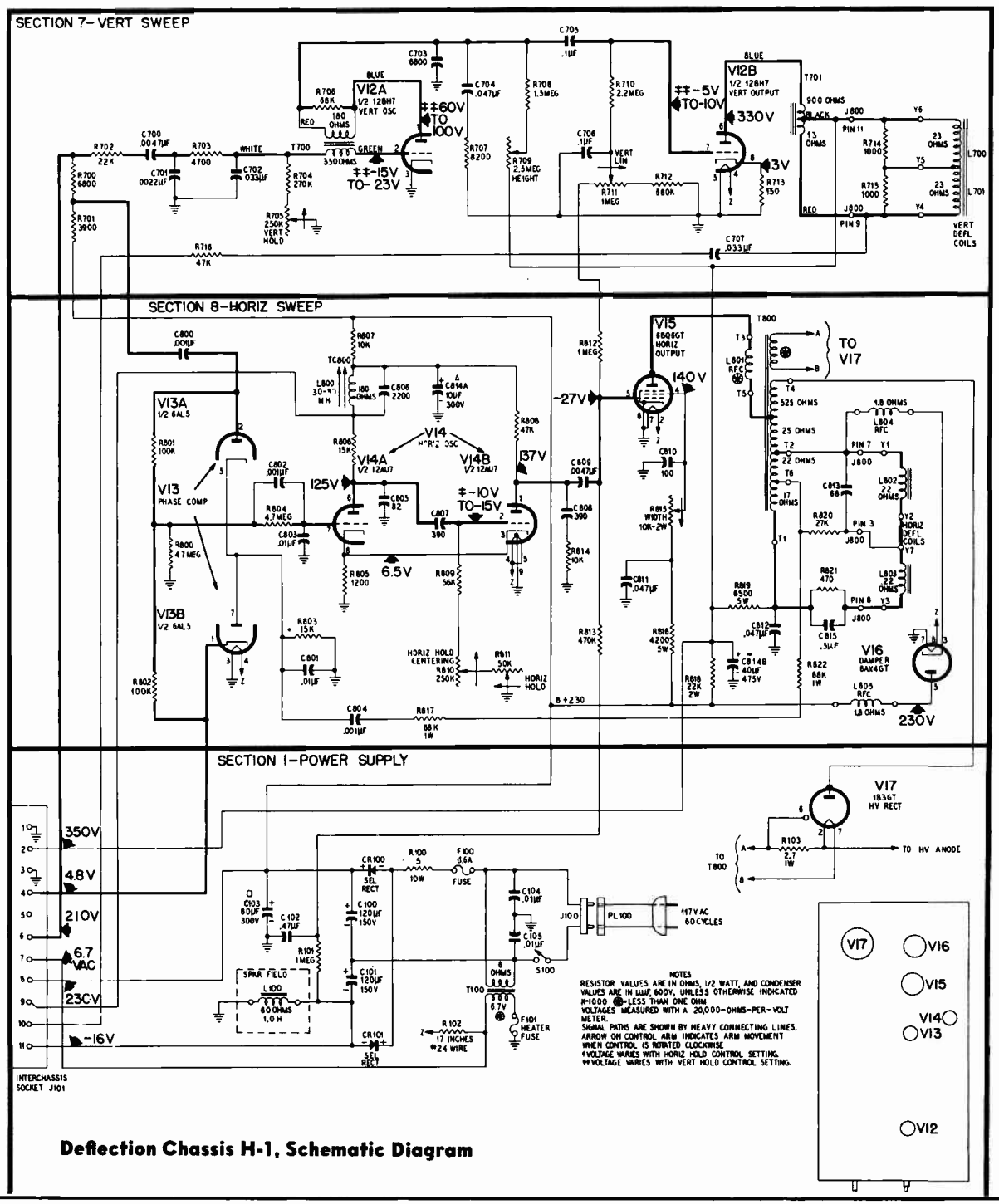

Deflection Chassis H-1, Schematic Diagram

PHILCO Chassis 81, Schematic Diagram

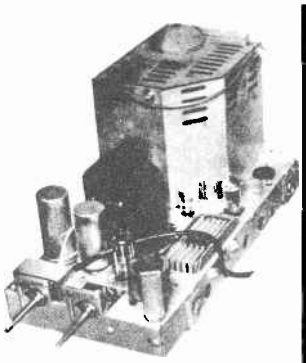

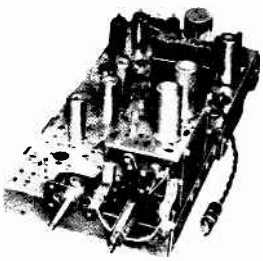

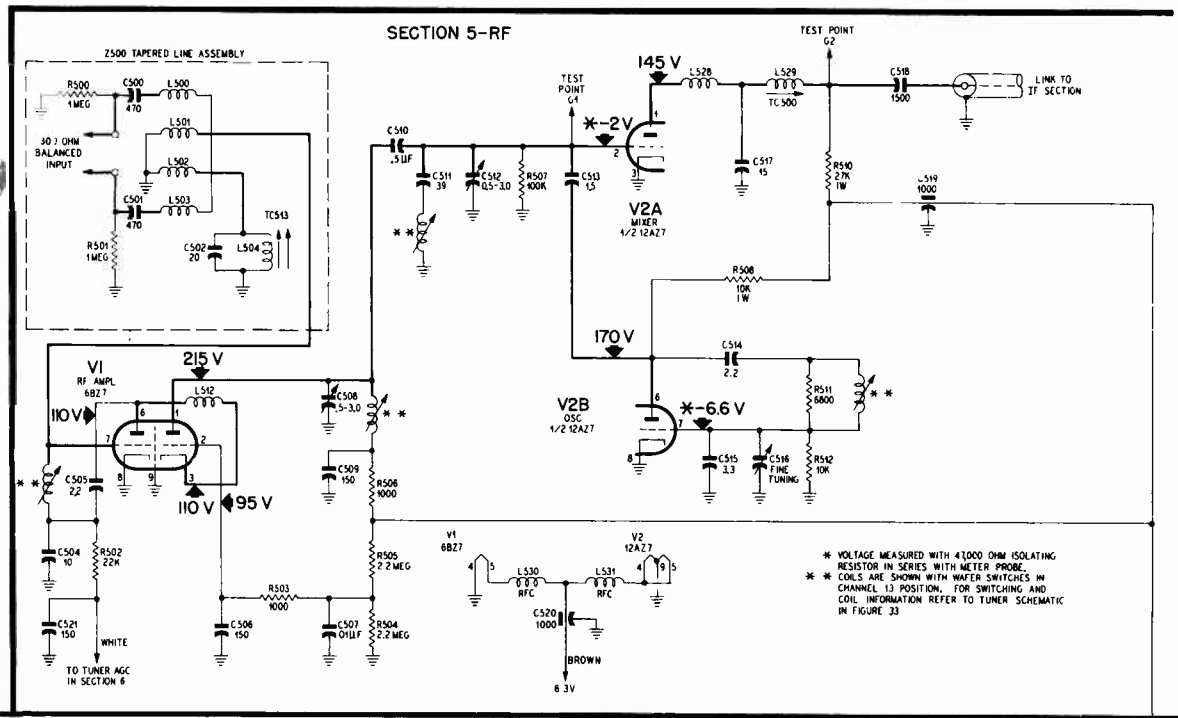

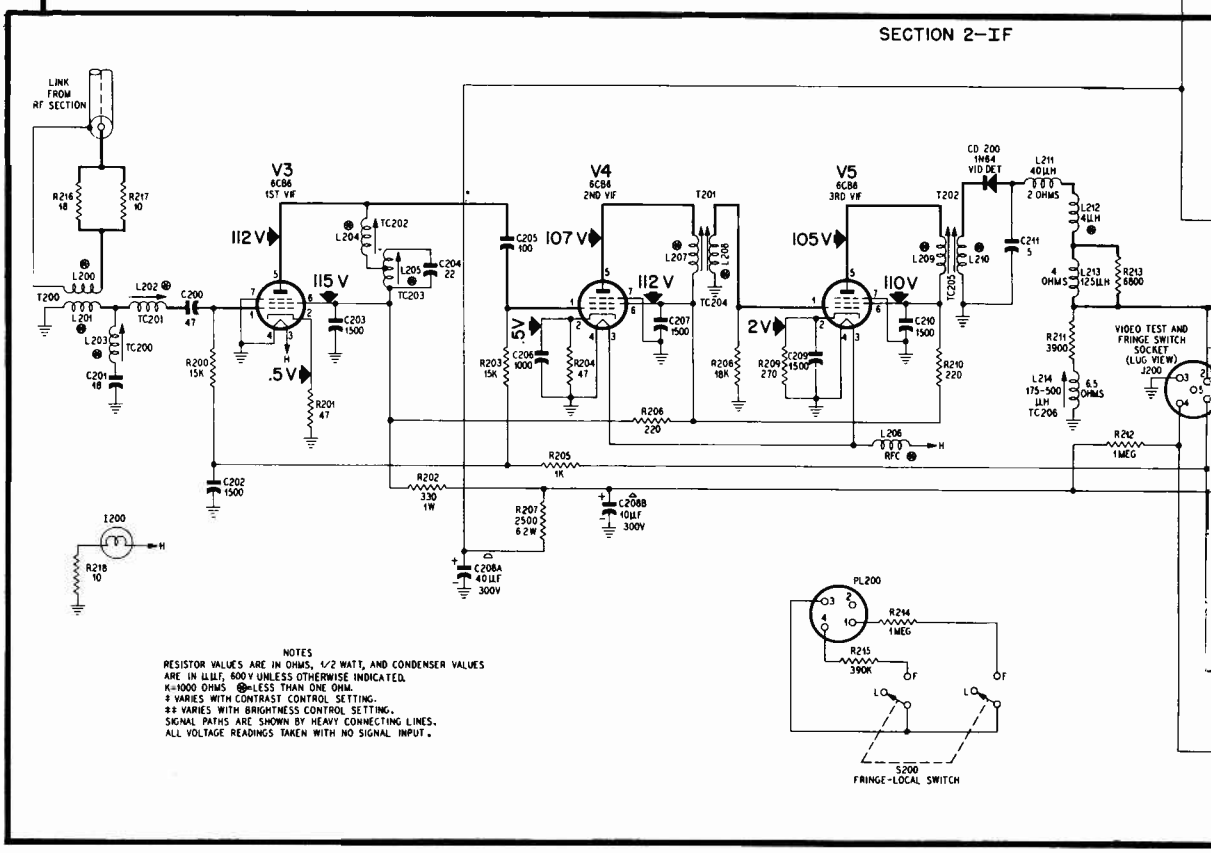

R-F Chassis 81, Schematic Diagram

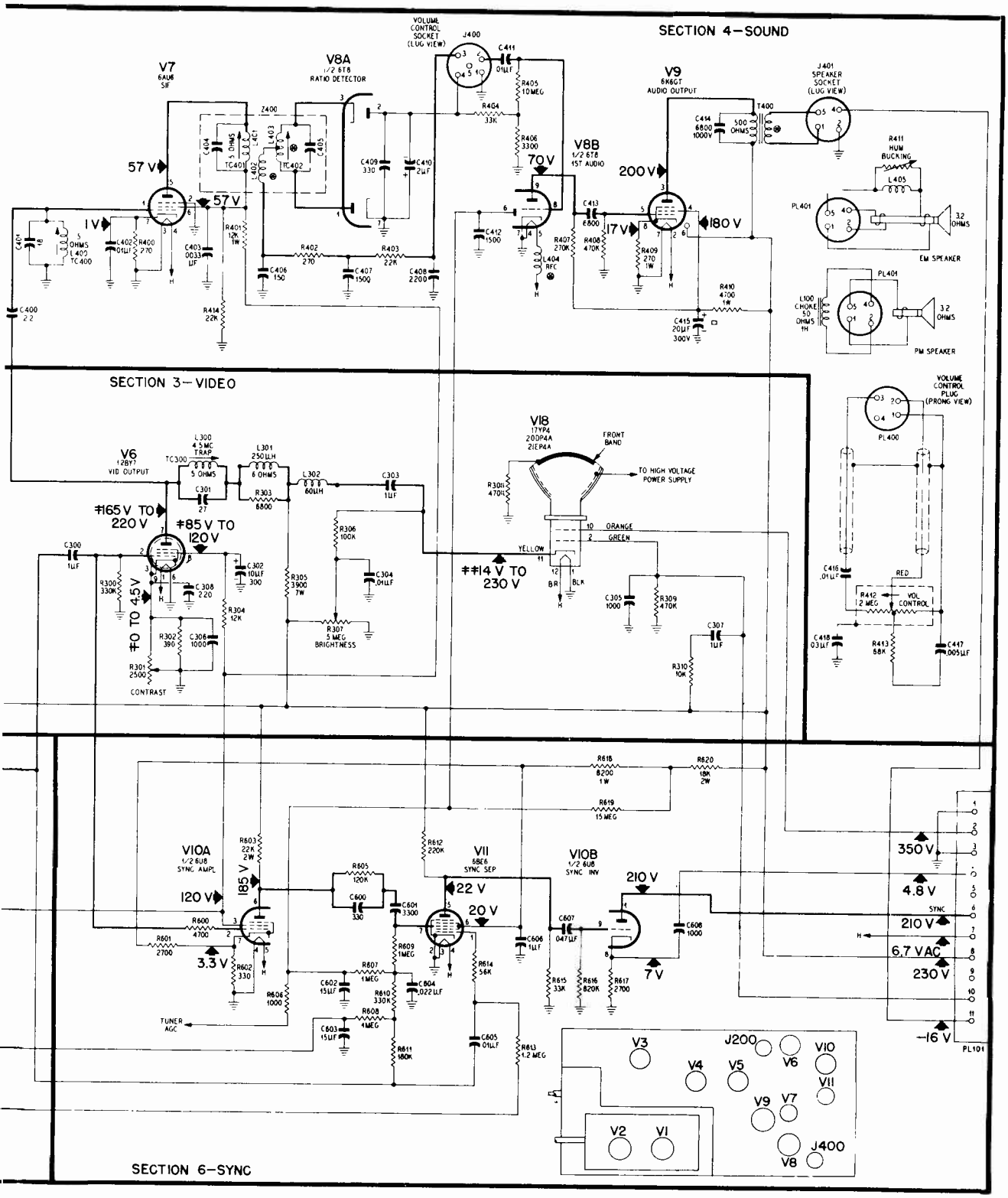

PHILCO Chassis 91, Schematic Diagram

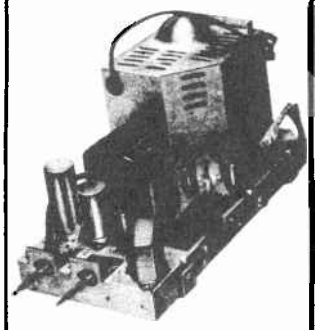

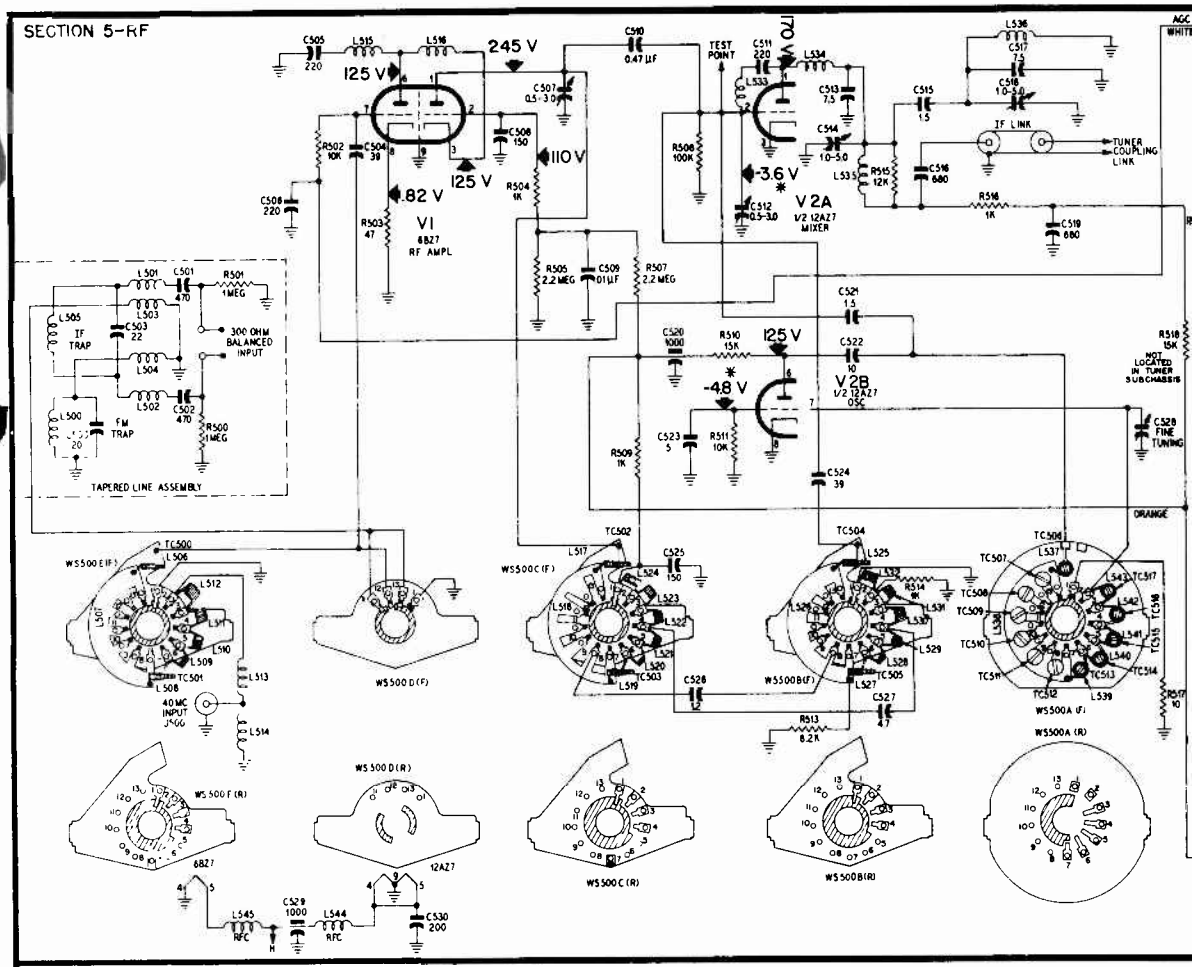

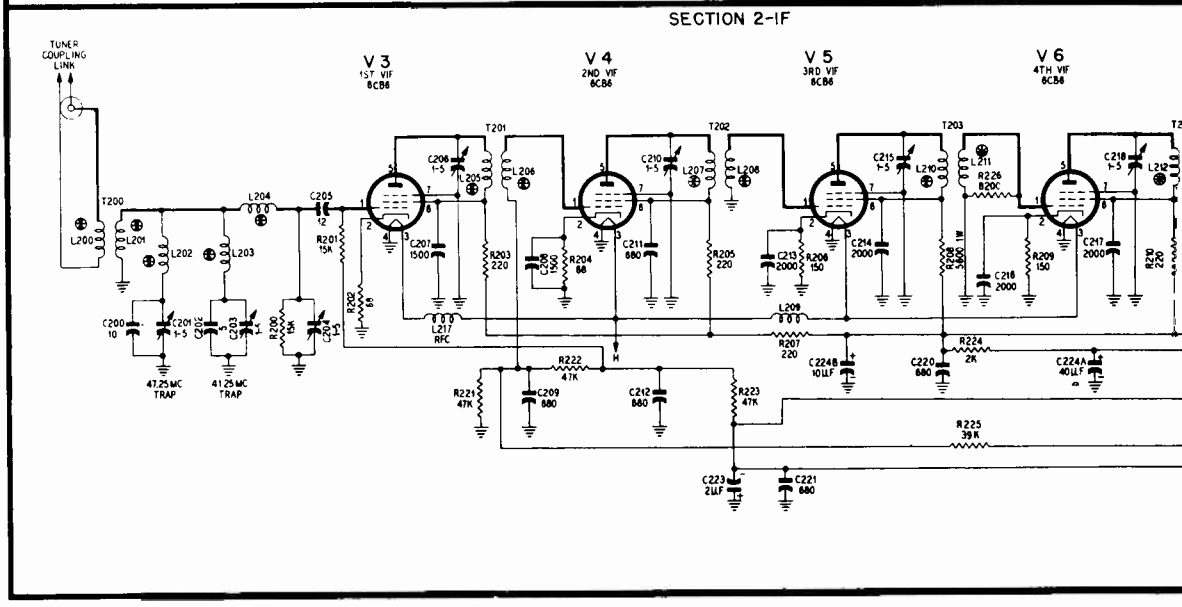

Figure 37. R-F Chassis 91, Schematic Diagram

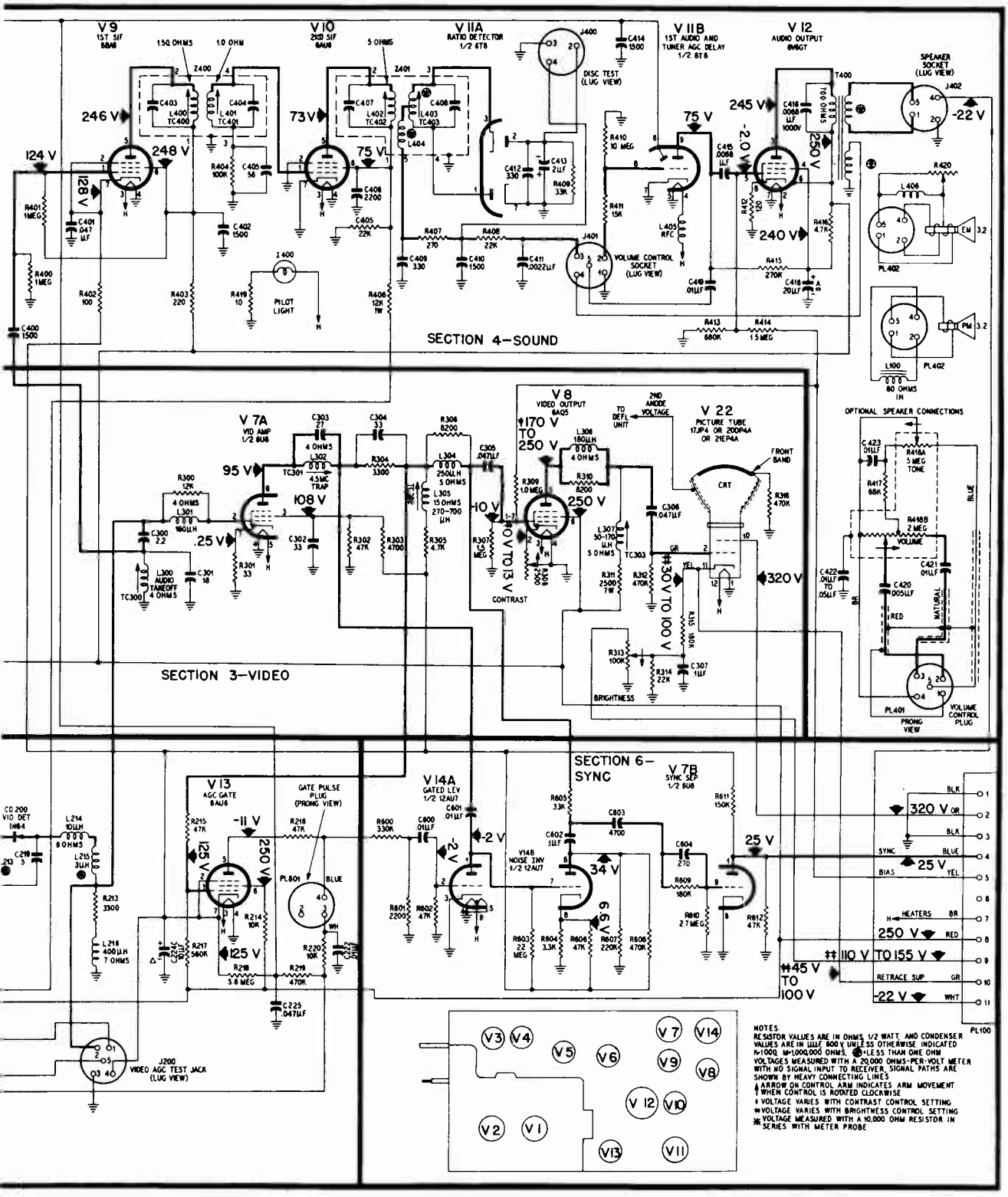

PHILCO Deflection Chassis J-1

(Alignment material for R.F. Chassis 71, 81, and 91, begins on the next page and continues for eight pages.)

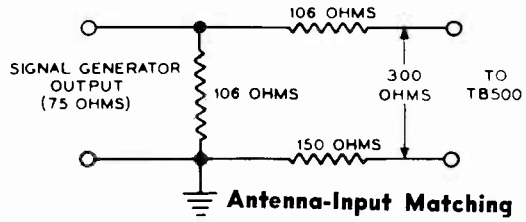

Figure 38. Deflection Chassis J-1, Schematic Diagram

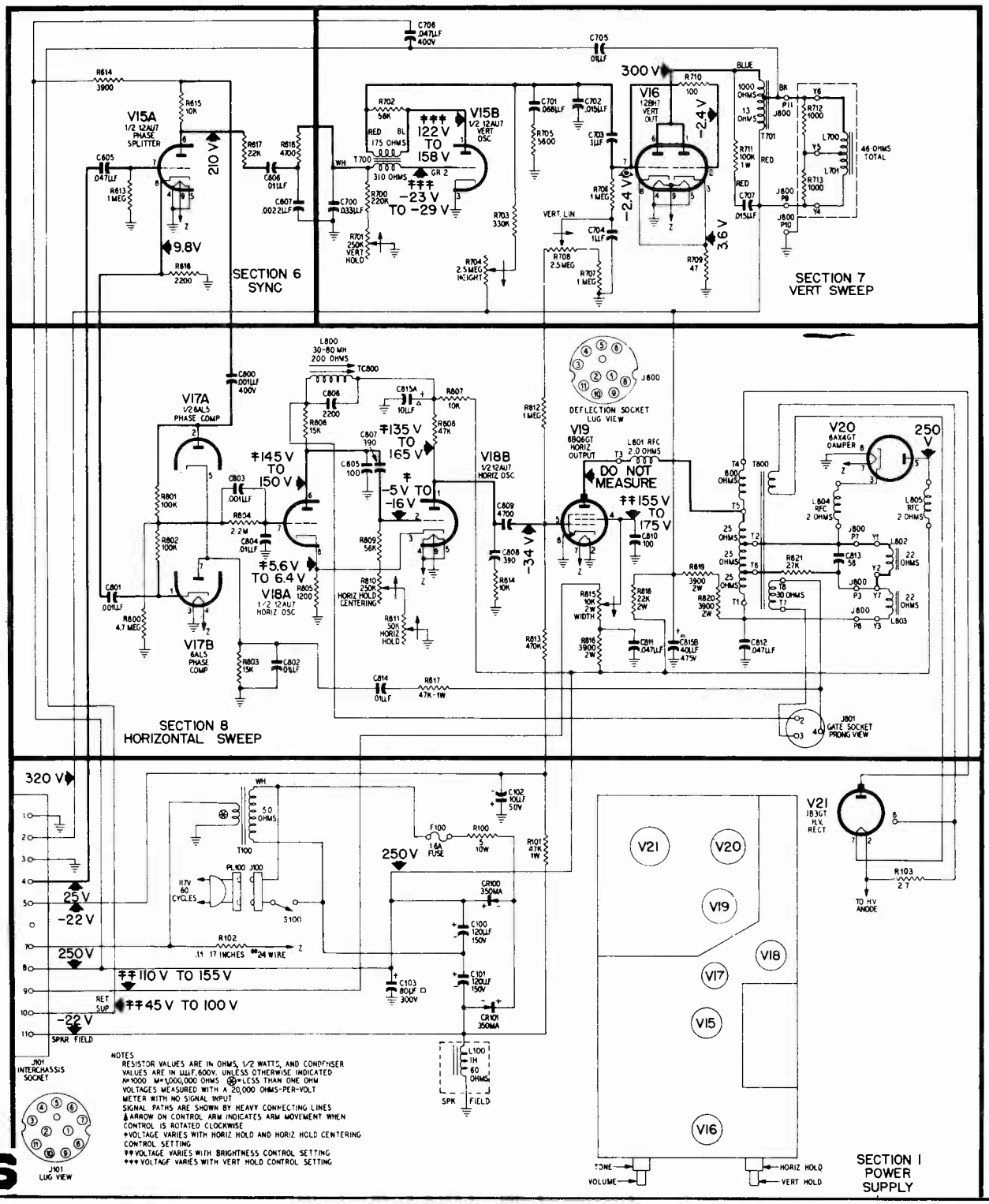

Alignment Information for PHILCO models using Chassis 71, 81, and 91.

The alignment of Philco R.F. Chassis 71, 81, and 91 are similar in many ways, but do differ in some steps of the procedure. In particular, major differences exist in the tuner oscillator alignment, video I.F. alignment, and types of jigs required. The information presented below is applicable to all three chassis, except for the paragraphs that are boxed-in and noted to refer only to a specific chassis. When servicing any one of these chassis, follow the general material and the specific (boxed-in) data on the R.F. chassis on hand. Also find the specific illustrations for the construction of jigs needed for any one particular chassis.

TELEVISION TUNER ALIGNMENT

After the tuner is serviced, or if an i-f alignment is required, or if a replacement tube does not exactly meet the requirements, the tuner alignment should be checked. If realignment is necessary, use the procedure given below.

Since the frequency of the local oscillator affects the tuner response, the local oscillator alignment should be made first.

Procedure Using Station Signal

The following simplified procedure may be used to align the oscillator when the television i-f alignment is satisfactory and a station signal is available:

1. Mechanically preset the FINE TUNING cam to the center of its range.
2. Tune in the highest-frequency channel to be received.
3. Adjust the tuning core for that channel, or the next highest channel, for the best picture; that is, starting with sound in the picture, turn the tuning core until the sound disappears. Repeat for each channel received in the area.

Data for Chassis 71 and 91, only.

Procedure Using Signal Generators

An r-f signal (unmodulated), at the video carrier frequency of the channel, is fed into the antenna input, and an i-f signal, at the i-f carrier frequency, is fed to the first i-f amplifier. Two AM signal generators are used to supply the above signals. An oscilloscope is connected to the video detector output. The oscillator core is then adjusted for zero beat on each channel.

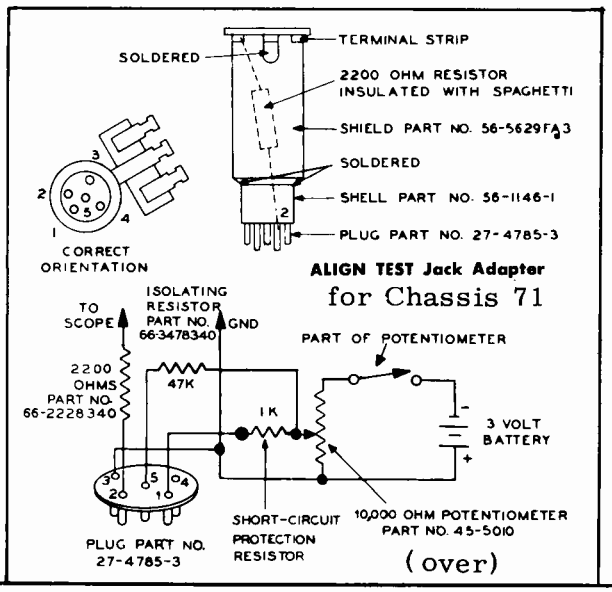

(over)

Procedure Using Signal Generator Chassis 81.

An r-f signal (unmodulated), at the oscillator frequency, is fed into the antenna input from an AM signal generator, and the oscillator tuning cores are adjusted for zero beat. The r-f signal frequency should be accurately determined. It is preferable that the signal be taken from a crystal-controlled source.

Chassis 81 TV Tuner, Adjustments.

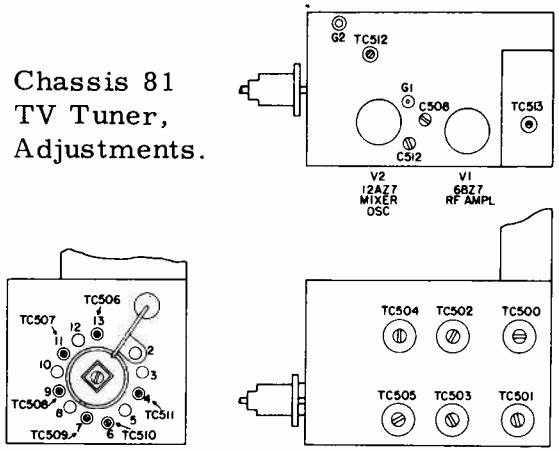

1. Connect the hot lead of the oscilloscope to the mixer plate test point, G2, through a 1000-ohm resistor, and connect the ground lead of the oscilloscope to the chassis, near the test point. (High oscilloscope gain may be necessary to obtain a visual beat. In this instance, base-line hum may be ignored.)
2. Connect the AM (marker) generator to the 300-ohm antenna-input terminals. For this purpose the antenna-input matching network is not required.
3. If the tuner is being aligned out of the chassis, connect the white lead to the negative terminal of a 1.5-volt battery. Ground the positive terminal.
4. Mechanically preset the FINE TUNING cam, as shown in figure.
5. Feed in an r-f signal (unmodulated), at the oscillator frequency for Channel 13, with the CHANNEL SELECTOR set for Channel 13.
6. Adjust the tuning core for Channel 13 (see figure).
7. Reset the signal-generator frequency and the CHANNEL SELECTOR, and adjust the tuning cores for Channels 11 and 9, respectively.
8. Repeat steps 5, 6, and 7 until Channels 13, 11, and 9 are within plus or minus 500 kc. of the correct frequency.
9. Feed in r-f (unmodulated) signals, at the oscillator frequencies for Channels 7, 6, and 4, consecutively (see NOTE below), and adjust the respective tuning cores. (See figure.)

NOTE: The exact position of the FINE TUNING cam should be marked when Channel 4 is correctly aligned.

Alignment for PHILCO Chassis 71, 81, and 91, continued.

Data for Chassis 71 and 91, continued. See adjacent column at right, for part 1 of text and tuner drawings for # 91, which differ from material below applicable in the main to both 71 and 91.

To align the oscillator, proceed as follows:

1. To observe the zero beat, connect the oscilloscope to the video detector output through the ALIGN TEST jack adapter. See figure. Bias the tuner and i-f a-g-c circuits with one and one-half volts, by means of the adapter.
2. To feed in the i-f comparison signal, remove the shield from the first v-i-f tube and wrap several turns of insulated copper wire around the tube. Connect the output leads of the v-i-f signal generator to the two ends of the wire loops, and set the generator for unmodulated output at 45.75 mc.
3. To feed in the signal representing the channel frequency, set the r-f signal generator at the video carrier frequency of channel 13, and connect the output to the aerial terminals of the receiver, through the proper matching jig.
4. Mechanically preset the fine-tuning cam, as shown in figure, and set the CHANNEL SELECTOR to channel 13.
5. Adjust the channel-13 tuning core for zero beat, as indicated by the oscilloscope.
6. Retune the r-f signal generator and the CHANNEL SELECTOR for channels 12, then 11, etc., each time adjusting the respective tuning core for zero beat. The tuning cores should be adjusted progressively from the highest to lowest channel, because the higher channel adjustments will affect the lower channels.

Applicable only to Chassis 91.

To align the oscillator, proceed as follows:

1. To observe the zero beat, connect the oscilloscope to the video detector output through the video i-f alignment jig. See figure. Bias the tuner and i-f a-g-c circuits with one and one half volts and remove the gate pulse plug PL801, from the socket J801. To apply the bias to the tuner connect the battery to the white lead which comes out of the top of the tuner. On later runs of this tuner, the white a-g-c lead connects to a feed through condenser on the top of the tuner. To make certain that good connection is made to the tuner a-g-c circuit remove the glyptol coating on this condenser terminal.

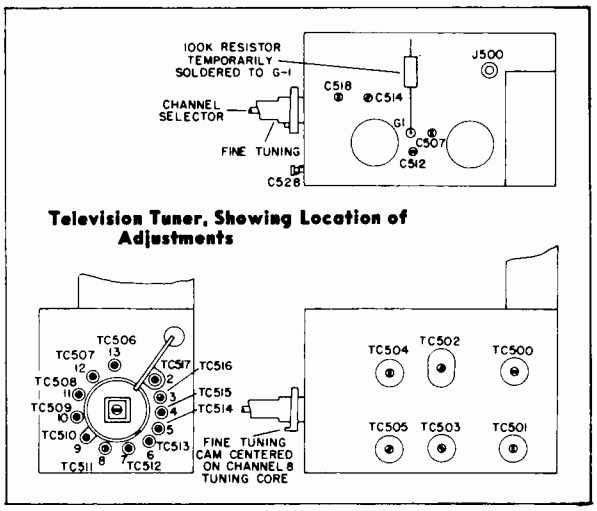

Television Tuner, Showing Location of Adjustments

Chassis 71. **Television Tuner, Showing Location of Adjustments**

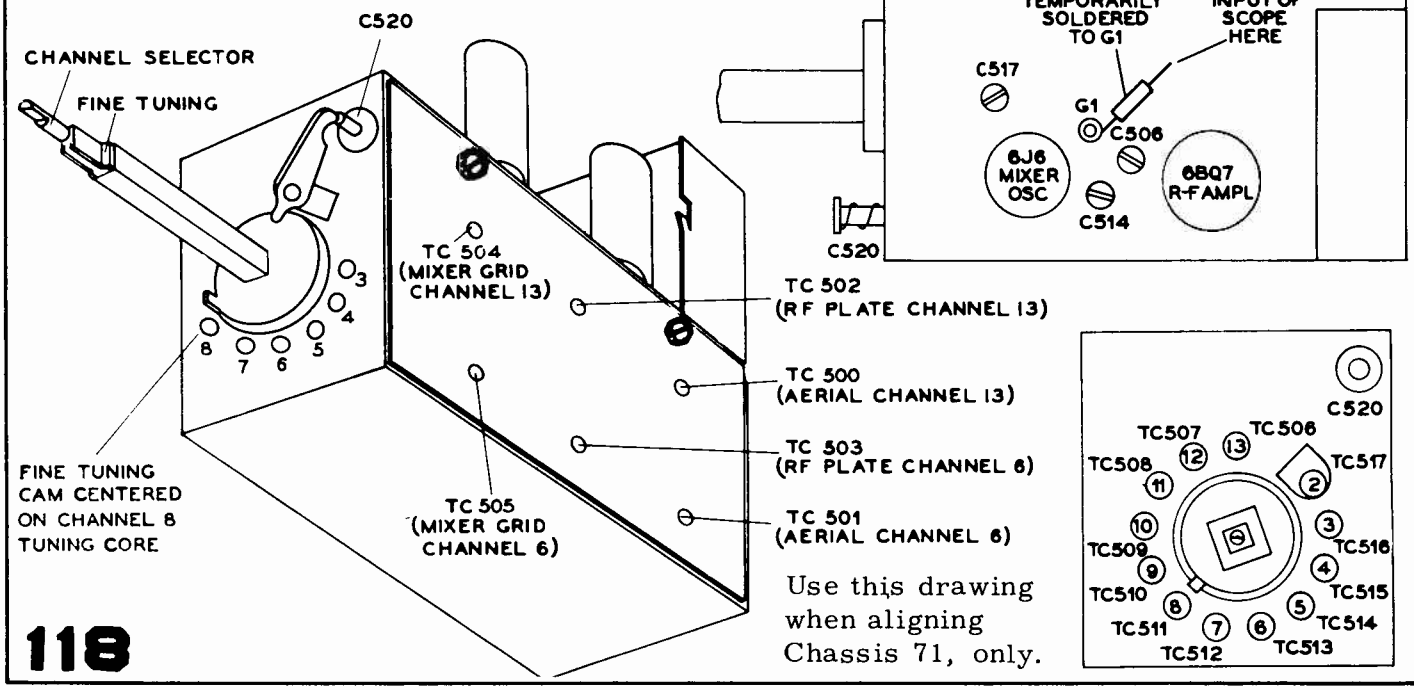

Use this drawing when aligning Chassis 71, only.

Alignment for PHILCO Chassis 71, 81, and 91, continued.

Tuner Bandpass Alignment

General

The bandpass alignment consists of aligning the tuner at Channels 13 and 6 and then making it track properly.

During the alignment, a fixed bias of 1.5 volts is applied to the r-f amplifier tube through the white a-g-c lead.

An FM (sweep) signal is applied to the antenna-input circuit through the proper matching jig, and an oscilloscope is connected through a 100,000-ohm resistor to the mixer-grid test point. The oscilloscope gain should be as high as possible, consistent with "hum" level and "bounce" conditions. Hum conditions will cause distortion of the time base and response. Bounce conditions, a result of poor line regulation, will cause the response and the time base to jump up and down. The use of too high an oscilloscope gain aggravates these conditions, whereas the use of too low a gain necessitates increasing the generator output to a point where the tuner may be overloaded. The scope controls should be adjusted so that the width of the presentation is double the height. Overload may then be checked by changing the generator output while observing the shape of the response curve. When the generator output is changed, the vertical gain of the oscilloscope should be readjusted to keep the scope presentation amplitude the same. Do not readjust the horizontal gain control. Any change in the shape of the curve indicates overload, in which case a lower generator output and higher oscilloscope gain must be used.

The signal generator output must be properly matched to the antenna input of the tuner. The Antenna-Input Matching Network, shown in figure 2 of PR2170, or Philco Antenna Matching Jig, Part No. 45-1637, may be used for this purpose. If a matching jig is not used, the result obtained will be extremely unreliable.

Regeneration in the test setup will also cause poor and unreliable results. To check for regeneration move the hand along the generator cable after all equipment is connected, and observe the response curve on the oscilloscope screen. If the response curve on the oscilloscope changes as the hand is moved along the cable, regeneration is indicated. A check for regeneration may also be made by adjusting the VOLUME control until the noise in the speaker can be heard. If the level of the noise changes as the hand is moved along the generator cable, regeneration is indicated. The symptoms which indicate regeneration may also be caused by failure to use the proper matching jig as described above.

Procedure

CAUTION: When comparing the response curves from channel to channel, maintain the 2 to 1 width to height relationship in the oscilloscope presentation as described above.

1. Connect the FM (sweep) and AM marker generators to the 300-ohm aerial input through an aerial-input matching jig.
2. Connect the oscilloscope to the mixer-grid test point through a 100,000-ohm, one-half watt resistor, as shown in figures. Connect the ground lead of the oscilloscope as close to the mixer tube as possible.
3. Apply 1.5 volts bias to the white tuner a-g-c lead.

Applicable only to Chassis 71.

4. Disconnect the tuner coupling link at wiring panel B-11 terminals 5 and 6, and solder a 68-ohm, one-half-watt carbon resistor to the open link coming from the tuner. See figure 34. Remove the first i-f tube from its socket.

Applicable only to Chassis 81

4. Disconnect the tuner link at terminal board B11-7 and B11-8 (see figure 34), and connect a 40- to 70-ohm carbon resistor to the two leads of the link.

Applicable only to Chassis 91.

4. Disconnect the tuner coupling link at wiring panel B-13 terminals 1 and 4, and solder a 68-ohm, one-half watt carbon resistor to the open link coming from the tuner. See figure 7. Remove the first i-f tube from its socket.

5. Set the CHANNEL SELECTOR and FM (sweep) generator to Channel 13 (213 mc.). Adjust the generator for sufficient sweep width to show the complete response curve.
6. Establish channel limits (see figure 5) by using the marker (AM r-f) signal generator to produce marker pips on the response curve. (Set the marker generator first to 210 mc., then 216 mc.) The response curve should be reasonably flat between the limits.
7. Adjust TC502 and TC504 (figure 4) for a symmetrical, approximately centered pass band. Set marker generator to 213 mc. Detune TC504 counterclockwise until a single peak appears. Adjust TC502 until the peak falls on the 213-mc. marker. (It may be necessary to increase the output of the generator during this adjustment.) Then adjust TC500 for maximum curve height and symmetry of the single peak. The antenna circuit is now tuned for the high band channels.

NOTE: On later runs of the tuner, L506 is not tunable and TC500 is omitted, therefore, the adjustments in step 7 should be confined to TC502 and TC504 when later-run tuners are encountered.

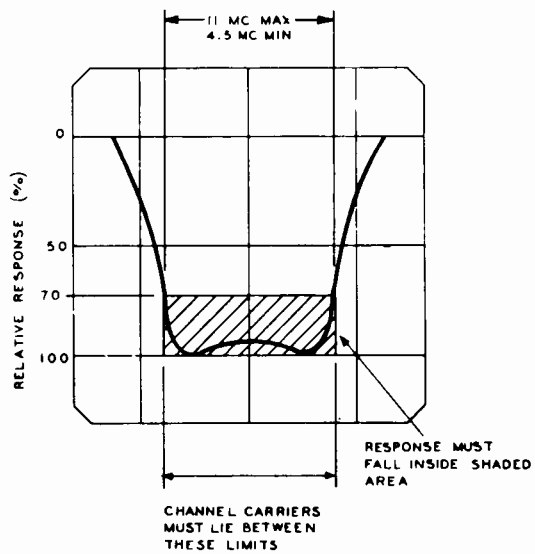

Figure 5. Television Tuner Response Curve, Showing Bandpass Limits

PHILCO Chassis 71, 81, and 91, Top Views showing location of adjustments needed for alignment.

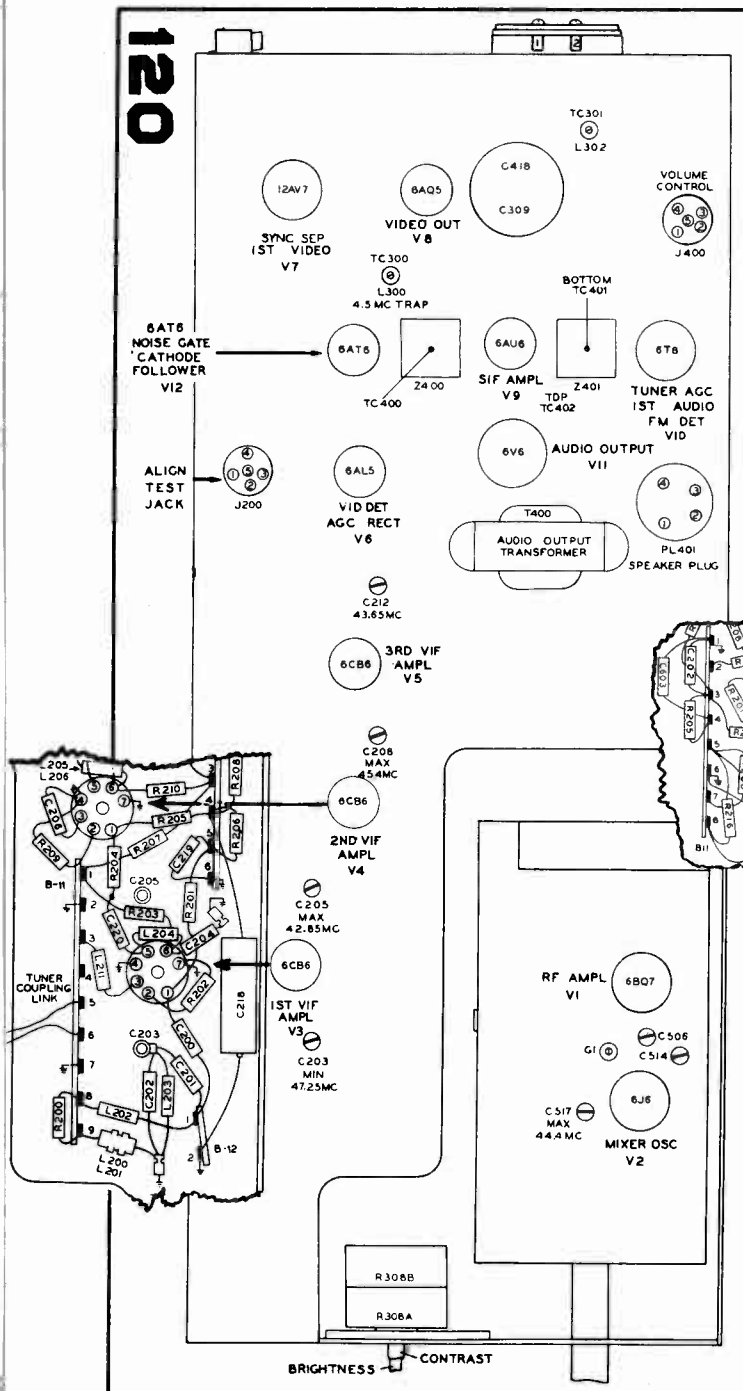

Figure 34. RF Chassis 71, Runs 3TS, 4S, and 5, Base Layout

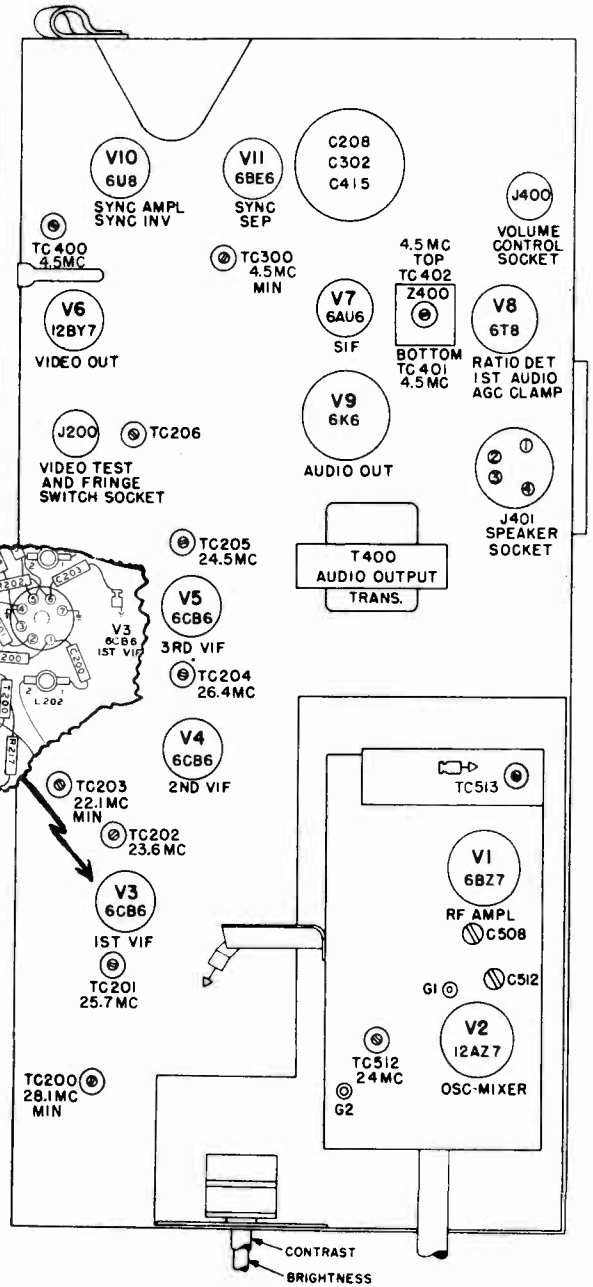

Figure 34. R-F Chassis 81, Base Layout

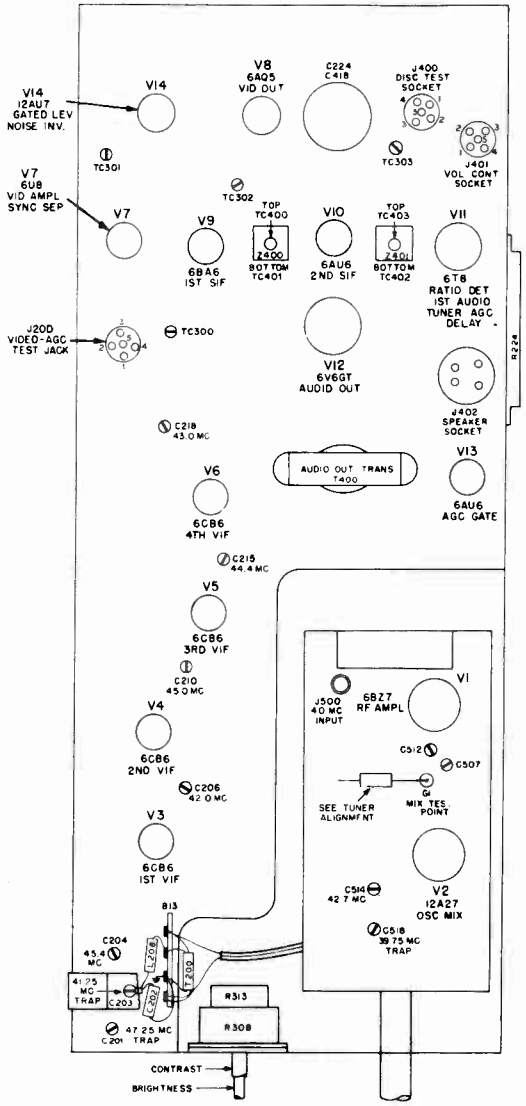

Figure 7. R-F Chassis 91, Top View, Showing Location of Adjustments

Alignment for PHILCO Chassis 71, 81, and 91, continued.

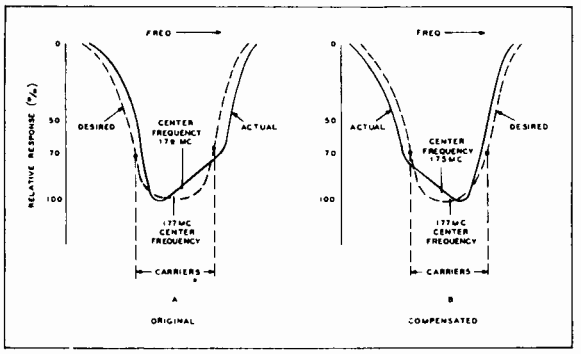

Figure 6. Television Tuner Response Curve, Showing Tracking Compensation

8. Readjust TC502 and TC504 for a symmetrical response, centered about 213 mc. and falling within the specifications as shown in figure 5.

9. Set the CHANNEL SELECTOR and FM generator to Channel 7 (177 mc.). Establish the channel limits by using the marker-signal generator to produce marker pips on the response curve. (Set the marker generator first to 174 mc., and then to 180 mc.) The curve should be reasonably flat between the limits.

10. On Channel 7, observe the tilt, and center frequency of the response curve. The curve should be centered in the pass band and should be symmetrical. If it is not symmetrical and appears unbalanced, as in figure 6, adjust C507 and C512 (figure 4) to obtain a response curve which is the mirror image (tilt in the opposite direction) of the original; for example, if Channel 7 response curve appears as in figure 6A, adjust C506 and C514 until the curve appears as in figure 6B. This adjustment overcompensates to make allowance for the effect of Channel 13 adjustments (to be made in step 11) upon Channel 7 response.

11. Reset the CHANNEL SELECTOR and generators to Channel 13, and repeat steps 8 through 10 as many times as necessary to obtain most symmetrical and centered response curves on Channels 13 and 7. Channels 7 through 13 are now correctly aligned.

12. Set the CHANNEL SELECTOR and sweep generator to Channel 6 (85 mc.).

13. Establish the channel limits, using the marker generator to produce marker pips on the response curve. (Set the marker generator first to 82 mc., then to 88 mc.)

14. Adjust TC503 and TC505 for a symmetrical, approximately centered pass band. Set the marker generator to 85 mc. Detune TC505 counterclockwise until a single peak appears. Adjust TC503 until the peak falls on the 85-mc. marker. It may be necessary to increase the output of the generator during this adjustment. Then adjust TC501 for maximum curve height and symmetry of the single peak. The antenna circuit is now tuned for Channels 2 through 6.

15. Readjust TC503 and TC506 for a symmetrical response, centered about 85 mc. and falling within the specifications as shown in figure 6. Channels 2 through 6 are now correctly aligned.

NOTE: C212 and C515 control the top of curve. C205 controls the slope at sound side of curve. C208 controls the video carrier level. Do not disturb the setting of C203 from that obtained in step 2 and 7 above.

VIDEO I-F ALIGNMENT

PRELIMINARY

Before proceeding with the alignment or making an alignment check, observe the following preliminary instructions:

1. Preset the CONTRAST and BRIGHTNESS controls to the maximum counterclockwise position.
2. Preset the CHANNEL SELECTOR to Channel 4.
3. Insert the video i-f alignment jig into J200.

Applicable only to Chassis 71.

Procedure

1. Adjust the r-f and i-f a-g-c bias jig for 3 volts.
2. Set the AM generator for 47.25-mc. modulated output, and adjust C203 for minimum indication on the scope.
3. Set the AM generator for 43.65-mc. modulated output, and adjust C212 for maximum indication on the scope.
4. Set the AM generator for 45.4-mc. modulated output, and adjust C208 for maximum indication on the scope.
5. Set the AM generator for 42.85-mc. modulated output, and adjust C205 for maximum indication on the scope.
6. Set the AM generator for 44.4-mc. modulated output, and adjust C517 for maximum indication on the scope.
7. Recheck the adjustment of C203, as made in step 2 (above).
8. If it is desired to check the over-all response of the receiver, an r-f sweep generator signal may be injected through the proper matching jig into the aerial terminals, and the over-all response observed on the oscilloscope. Set the CHANNEL SELECTOR and sweep generator to channel 4. Set the FINE TUNING cam to the mark as indicated in step 6 of Procedure Using Signal Generators (under OSCILLATOR ALIGNMENT). The response should fall within the limits shown in figure.

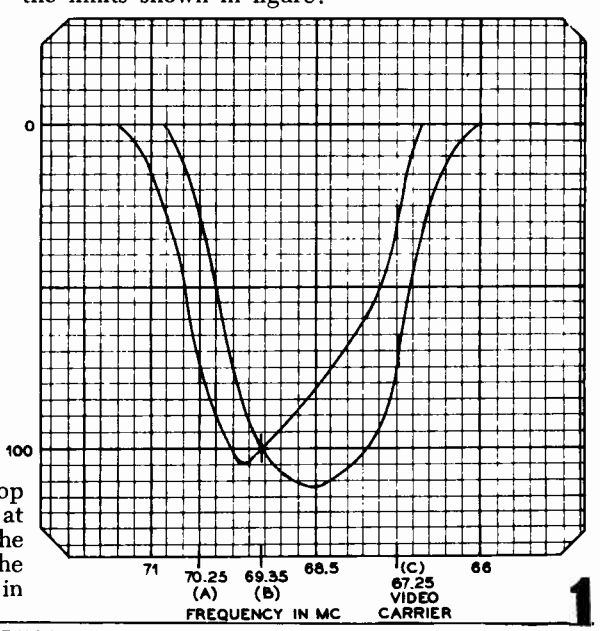

Alignment of PHILCO Chassis 71, 81, and 91, continued.

Video I.F. Alignment, continued.

Applicable to Chassis 81, only.

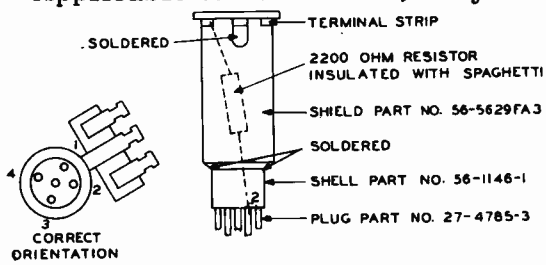

Video I-F Alignment Jig

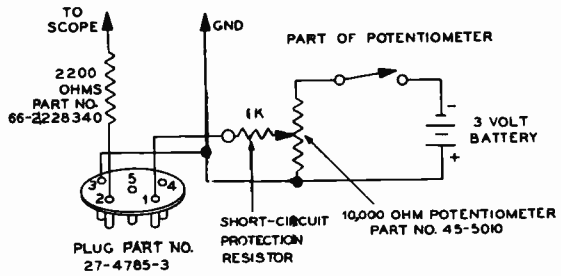

PROCEDURE for Chassis 81.

1. Tune the AM generator to 28.1 mc., and adjust TC200 (see figure 7) for minimum output, as observed on the oscilloscope.

2. Tune the AM generator to 22.1 mc., and adjust TC203 for minimum output, as observed on the oscilloscope.

NOTE: In steps 1 and 2 it is necessary to keep the generator output sufficiently high that a null indication may be observed on the oscilloscope; however, avoid overloading of the receiver by excessive signal.

3. Tune the AM generator to the frequencies indicated below, and adjust the tuning cores for maximum output.

a. 24.0 mc.—adjust TC512.
b. 25.7 mc.—adjust TC201.
c. 23.6 mc.—adjust TC202.
d. 26.4 mc.—adjust TC204.
e. 24.5 mc.—adjust TC205.

4. Connect the sweep generator and r-f marker generator to the antenna terminal through a matching jig. (If a separate oscilloscope is used, connect the sweep output of the generator to the horizontal input of the oscilloscope.) Set the CHANNEL SELECTOR to Channel 4, and tune the sweep generator for output on Channel 4. After the equipment is propertly connected, adjust the FINE TUNING control to the mark, as indicated in the NOTE under OSCILLATOR ALIGNMENT.

5. If the response curve does not fall within the limits shown in figure 8, the adjustment of the tuning cores may be touched up slightly, while observing the response curve with the sweep generator. Do not retouch the setting of TC200 and TC203. To adjust the curve, adjust TC201 and TC204 for proper video carrier level. The top of the curve may be leveled by adjusting TC205, and the low-frequency side of the curve may be adjusted by adjusting TC202. By means of these adjustments the response curve should be brought within the limits shown in figure 8.

CAUTION: Do not turn any of the tuning cores excessively. To retouch, only turn the tuning cores slightly.

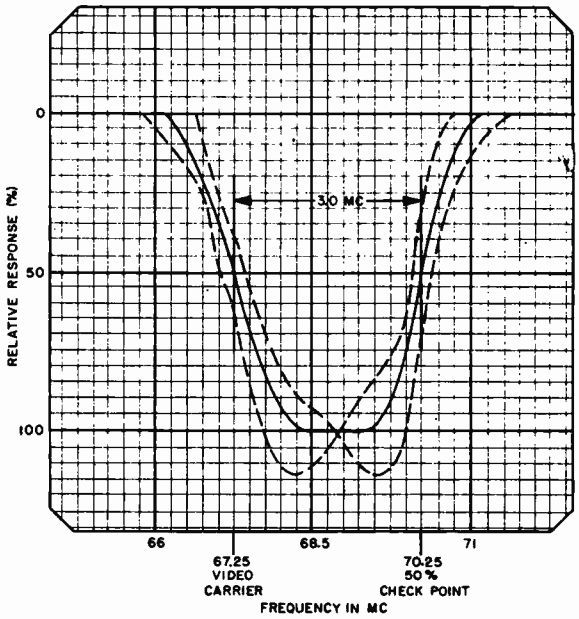

Figure 8. Over-all R-F, I-F Response Curve, Showing Tolerance Limits

Applicable to Chassis 91, only.

Procedure for Chassis 91.

1. Tune the AM generator to 39.75 mc. and adjust C518 (see figure 7) for minimum output as observed on the oscilloscope.

2. Tune the AM generator to 47.25 mc. and adjust C201 for minimum output as observed on the oscilloscope.

3. Tune the AM generator to 41.25 mc. and adjust C203 for minimum output as observed on the oscilloscope.

NOTE: In steps 1, 2, and 3 it is necessary to keep the generator output sufficiently high so that a null indication may be observed on the oscilloscope; however, avoid overloading of the receiver by excessive signal.

4. Tune the AM generator to the frequencies indicated and adjust the trimmers for maximum output.

a. 42.7 mc. adjust C514
b. 45.4 mc. adjust C204
c. 42.0 mc. adjust C206
d. 45.0 mc. adjust C210
e. 44.4 mc. adjust C215
f. 43.0 mc. adjust C218

5. Connect the sweep generator and r-f marker generator to the antenna terminal through a matching jig. (If separate oscilloscope is used, connect the sweep output of the generator to the horizontal input of the oscilloscope.) Set the CHANNEL SELECTOR to Channel 4 and tune the sweep generator for output on Channel 4. Tune the r-f marker generator for the video carrier frequency of Channel 4 (67.25 mc.) and tune the i-f marker generator (connected to mixer grid) to 45.75 mc. Note that two marker generators are used for this procedure. The r-f marker generator is connected to the antenna terminals while the i-f marker generator is connected to the mixer grid test point, G1. A jig

Alignment of PHILCO Chassis 71, 81, and 91, continued.

Applicable to Chassis 91, only.

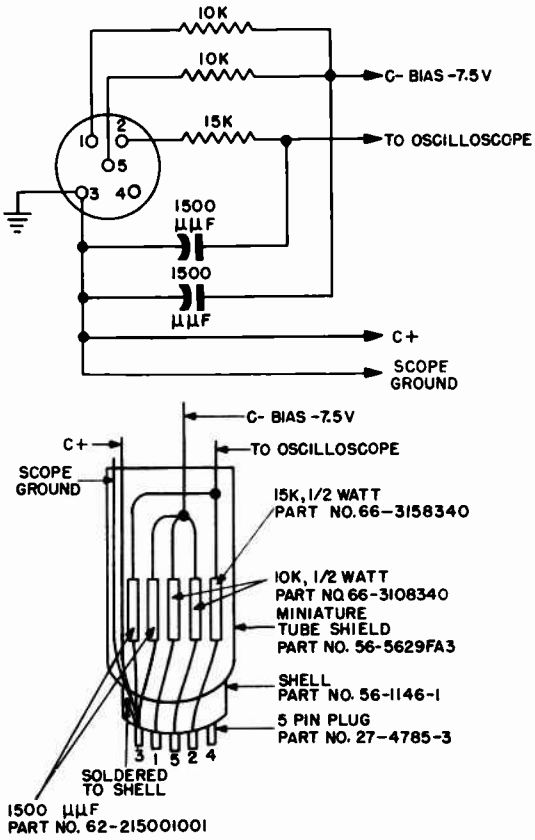

Video I-F Alignment Jig (VIDEO TEST Jack Adapter)

constructed from a piece of fiber tubing, with 3/16 inch inside diameter, and a brass machine screw which fits tightly into the tubing is used to connect the generator to the test point. The screw is adjusted so that it clears the test point by approximately 1/64 inch. The output cable of the marker generator is connected to the head of the brass screw in the jig and to chassis near the mixer tube. Both marker generators should be adjusted for the minimum output required to make the markers barely visible. Failure to observe this precaution or the use of excessive output from the sweep generator will cause misleading results. After the equipment is properly connected, adjust the FINE TUNING control for zero-beat of the two markers, as observed on the oscilloscope. When zero beat is obtained, remove the i-f marker.

6. If the response curve does not fall within the limits as shown in figure, the adjustment of the trimmers may be touched up slightly, while observing the response curve with the sweep generator. Do not retouch the setting of C518, C201, C203, or C206. To adjust the curve, first adjust C215 and C218, alternately until maximum improvement has been obtained. C215 affects the tilt of the curve and C218 affects the dip of the curve. After C215 and C218 have been adjusted, adjust C514 for proper slope at the 42.25 mc. side of the curve, then adjust C204 and C210 for proper level at the video carrier (45.75 mc.).

CAUTION: Do not turn any of the trimmers excessively. To retouch, only turn the trimmers slightly.

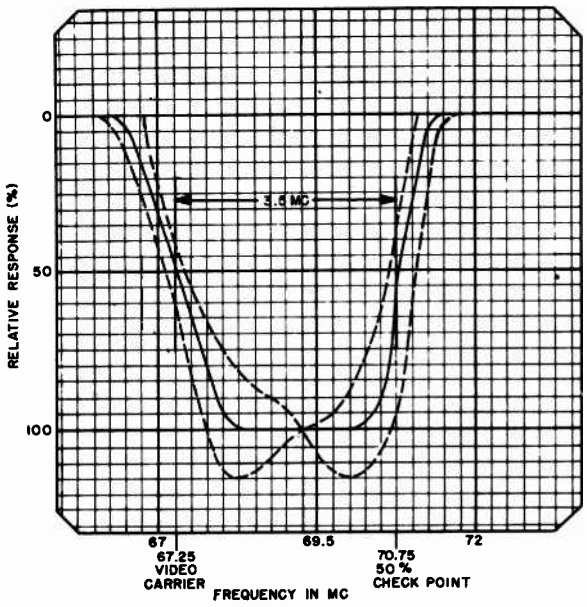

Overall R-F, I-F Response Curve

Applicable to Chassis 91, only.

S-I-F ALIGNMENT

The sound i-f system may be aligned by means of the station signal or an accurately calibrated signal generator as the signal source. If the station signal is used, tune the FINE TUNING control for the best picture regardless of sound. It will be necessary to reduce the signal input to the receiver so that the d-c output at the sound detector, as measured between pins 2 and 3 of J400, is kept below 10 volts maximum and preferably below 5 volts. In strong signal areas this may require shorting of the antenna terminals and the application of bias to the a-g-c circuit. The signal input to the receiver may be adjusted by varying the

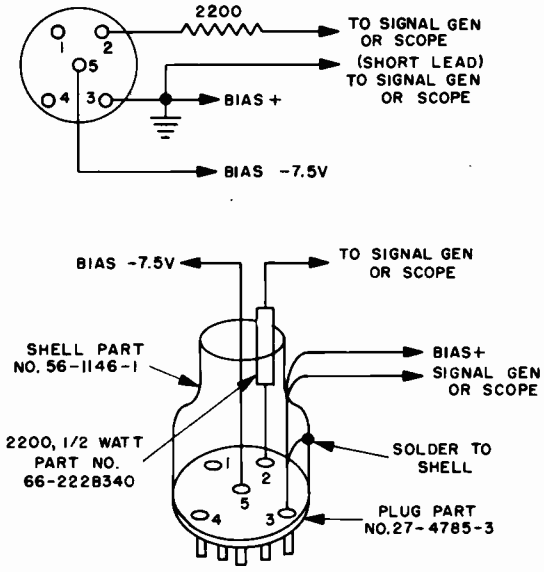

Figure 2. Sound I-F Input Alignment Jig (VIDEO TEST Jack Adapter)

Sound I.F. Alignment for PHILCO R.F. Chassis 91, continued.

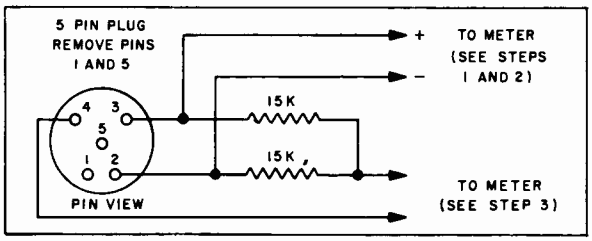

Figure 3. Sound I-F Output Alignment Jig (FM TEST Jack Adapter)

length of the shorting lead. The bias may be applied to the a-g-c circuit by means of the jig shown in figure 2. The s-i-f output alignment jig shown in figure 3 should be used for convenient connection of the meter to the sound detector output.

When an accurately calibrated signal generator is used, bias should be applied to the a-g-c circuit to aid in the reduction of circuit noises from the i-f system. The receiver should be adjusted to a channel on which no station can be received. The generator should be connected to pin 2 of J200 through the 2200 ohms resistor in the sound i-f input alignment jig. The generator should be adjusted for unmodulated output at 4.5 mc.

After the above conditions have been met, proceed as follows:

1. Connect the 20,000 ohms-per-volt meter to the leads from pins 2 and 3 of the sound i-f output alignment jig, negative terminal to pin 2 and positive terminal to pin 3.

2. Adjust TC300, TC400, TC401, and TC402 for maximum output as indicated on the meter. If the output exceeds 10 volts, reduce the signal input to the receiver.

3. Connect the meter to the junction of the two 15,000-ohm resistors in the sound i-f output alignment jig and to pin 3. Adjust TC403 for zero crossover. Zero crossover is indicated by a zero indication on the meter, and when TC403 is turned in one direction from this zero point, the meter will swing positive; turning TC403 in the opposite direction will cause a negative swing. (To aid in reading a positive and negative swing of the meter, set the pointer by means of the zero adjust screw to a convenient calibration mark on the scale before connecting to the circuit.)

Sound I.F. Alignment for PHILCO Chassis 81 (Alignment for 71 is similar).

SOUND I-F ALIGNMENT

1. Remove the first i-f tube, and connect a v.t.v.m. or a 20,000-ohms-per-volt voltmeter to the FM TEST jack adapter. Adjust the VOLUME control for moderate speaker output.
2. Feed in an accurately calibrated 4.5-mc. AM signal through the 2200-ohm resistor in the video i-f alignment jig to pin 2 of J200.
3. Tune TC400, TC401, and TC402 for maximum indication on the meter. The point of maximum meter indication for TC402 should also be the point of minimum speaker output.
4. Tune TC402 for minimum speaker output.
5. Connect an r-f probe or crystal detector to the grid (pin 2) of the picture tube. See NOTE below.
6. Tune TC300 for minimum indication on oscilloscope. If a crystal detector is not available, TC300 may be adjusted for minimum beat pattern, observed on the picture tube, with a station picture present.
7. Replace the first i-f tube. Tune in a station and use the speaker output as an indication.
8. Turn the FINE TUNING control clockwise to obtain a slightly fuzzy picture.
9. Tune TC402 for minimum AM (noise) output.

NOTE: The R-F Probe, Part No. 76-3595, is used as a detector of the 4.5-mc. signal, and the oscilloscope as an indicating device. An alternate crystal detector may be made up as shown in figure.

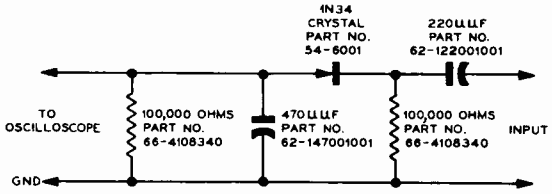

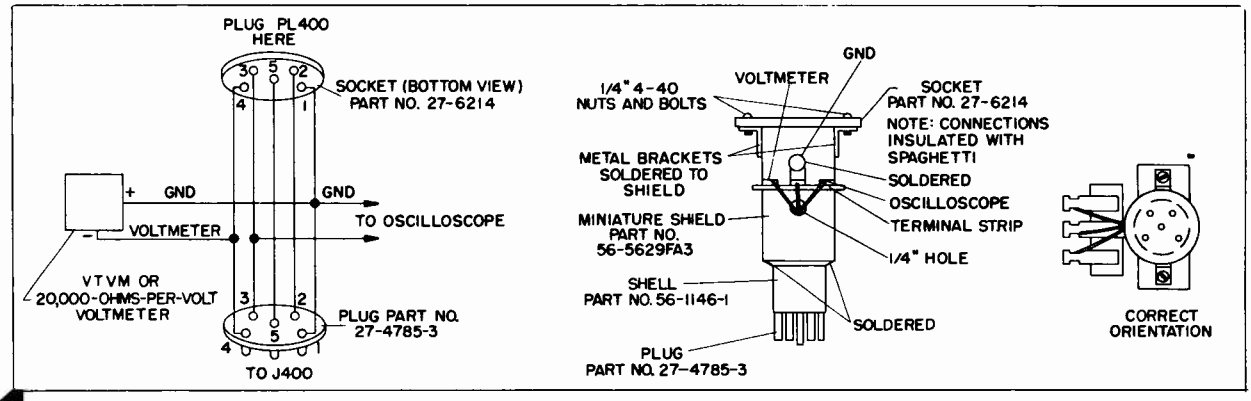

Sound I-F Alignment Jig

RCA VICTOR TELEVISION RECEIVERS

MODELS 17T200, 17T201, 17T202, 17T211, 17T220

Chassis No. KCS72

The material presented below and on the next seven pages is exact for the models listed above and using Chassis KCS-72. The group of models listed below and using Chassis KCS-72A are almost identical to the sets covered on these pages. There is almost no difference in circuit connections and alignment is identical. Models using Chassis KCS-72A employ 21AP4 kinescope.

MODELS 21T208, 21T217, 21T218, 21T227, 21T228, 21T229

Also combination Models 21T242 and 21T244 using Chassis KCS72D-1 or -2, have the circuit of the TV section basically the same as the models described.

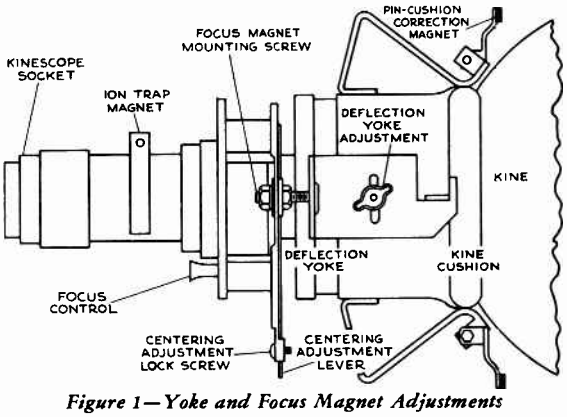

Figure 1—Yoke and Focus Magnet Adjustments

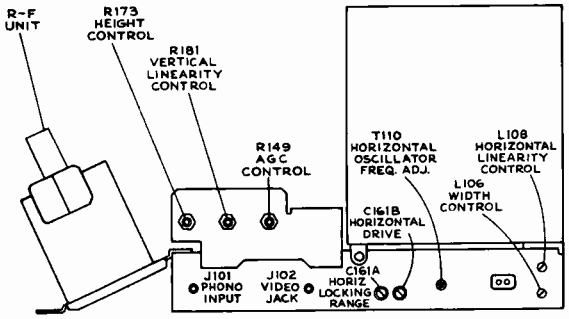

Figure 2—Rear Chassis Adjustments

Horizontal Frequency Adjustment.—Turn the horizontal hold control to the extreme clockwise position. Tune in a television station and adjust the T110 horizontal frequency adjustment at the rear of the chassis until the picture is just out of sync and the horizontal blanking appears as a vertical or diagonal black bar in the raster. Then turn the T110 core until the bar moves out of the picture leaving it in sync.

Horizontal Locking Range Adjustment.—Set the horizontal hold control to the full counter-clockwise position. Momentarily remove the signal by switching off channel then back. The picture may remain in sync. If so turn the T110 rear core slightly and momentarily switch off channel. Repeat until the picture falls out of sync with the diagonal lines sloping down to the left. Slowly turn the horizontal hold control clockwise and note the least number of diagonal bars obtained just before the picture pulls into sync.

If more than 3 bars are present just before the picture pulls into sync, adjust the horizontal locking range trimmer C161A slightly clockwise. If less than 2 bars are present, adjust C161A slightly counter-clockwise. Turn the horizontal hold control counter-clockwise, momentarily remove the signal and recheck the number of bars present at the pull-in point. Repeat this procedure until 2 or 3 bars are present.

Repeat the adjustments under "Horizontal Frequency Adjustment" and "Horizontal Locking Range Adjustment" until the conditions specified under each are fulfilled. When the horizontal hold operates as outlined under "Check of Horizontal Oscillator Alignment" the oscillator is properly adjusted.

If it is impossible to sync the picture at this point and the AGC system is in proper adjustment it will be necessary to adjust the Horizontal Oscillator by the method outlined in the alignment procedure

FOCUS MAGNET ADJUSTMENT.—The focus magnet should be adjusted so that there is approximately three-eighths inch of space between the rear cardboard shell of the yoke and the flat of the front face of the focus magnet. This spacing gives best average focus over the face of the tube.

AGC THRESHOLD CONTROL.—The AGC threshold control R149 is adjusted at the factory and normally should not require readjustment in the field.

To check the adjustment of the AGC Threshold Control, tune in a strong signal and sync the picture. Momentarily remove the signal by switching off channel and then back. If the picture reappears immediately, the receiver is not overloading due to improper setting of R149. If the picture requires an appreciable portion of a second to reappear, or bends excessively, R149 should be readjusted.

Turn R149 fully counter-clockwise. The raster may be bent slightly. This should be disregarded. Turn R149 clockwise until there is a very, very slight bend or change of bend in the picture. Then turn R149 counter-clockwise just sufficiently to remove this bend or change of bend.

If the signal is weak, the above method may not work as it may be impossible to get the picture to bend. In this case, turn R149 clockwise until the snow in the picture becomes more pronounced, then counter-clockwise until the best signal to noise ratio is obtained.

The AGC control adjustment should be made on a strong signal if possible. If the control is set too far clockwise on a weak signal, then the receiver may overload when a strong signal is received.

FM TRAP ADJUSTMENT.—In some instances interference may be encountered from a strong FM station signal. A trap is provided to eliminate this type of interference. To adjust the trap tune in the station on which the interference is observed and adjust the L203 core on top of the antenna matching transformer for minimum interference in the picture

CAUTION.—In some receivers, the FM trap L203 will tune down into channel 6 or even into channel 5. Needless to say, such an adjustment will cause greatly reduced sensitivity on these channels. If channels 5 or 6 are to be received, check L203 to make sure that it does not affect sensitivity on these two channels.

17T200, 17T201, 17T202, 17T211, 17T220

ALIGNMENT PROCEDURE

RCA Victor (continued)

TEST EQUIPMENT.—To properly service the television chassis of this receiver, it is recommended that the following test equipment be available:

R-F Sweep Generator meeting the following requirements:

(a) Frequency Ranges
20 to 30 mc., 1 mc. and 10 mc. sweep width
50 to 90 mc., 10 mc. sweep width
170 to 225 mc., 10 mc. sweep width
(b) Output adjustable with at least .1 volt maximum.
(c) Output constant on all ranges.
(d) "Flat" output on all attenuator positions.

Cathode-Ray Oscilloscope.—For alignment purposes, the oscilloscope employed must have excellent low frequency and phase response, and should be capable of passing a 60-cycle square wave without appreciable distortion.

For video and sync waveform observations, the oscilloscope must have excellent frequency and phase response from 10 cycles to at least two megacycles in all positions of the gain control.

Signal Generator to provide the following frequencies with crystal accuracy.

(a) Intermediate frequencies
22.25 and 25.5 mc. conv. and first pix i-f trans.
22.75 mc. second picture i-f transformer
24.25 mc. fourth picture i-f transformer
25.5 mc. third picture i-f transformer
25.50 mc. picture carrier
27.00 mc. adjacent channel sound trap
(b) Radio frequencies

Channel Number	Picture Carrier Freq. Mc.	Sound Carrier Freq. Mc.
2	55.25	59.75
3	61.25	65.75
4	67.25	71.75
5	77.25	81.75
6	83.25	87.75
7	175.25	179.75
8	181.25	185.75
9	187.25	191.75
10	193.25	197.75
11	199.25	203.75
12	205.25	209.75
13	211.25	215.75

(c) Output of these ranges should be adjustable and at least .1 volt maximum.

Heterodyne Frequency Meter with crystal calibrator which covers the frequency range from 80 mc. to 109 mc. and from 200 mc. to 237 mc.

Electronic Voltmeter of Junior or Senior "VoltOhmyst" type and a high voltage multiplier probe for use with this meter to permit measurements up to 15 kv.

Service Precautions.—If possible, the chassis should be serviced without the kinescope. However, if it is necessary to view the raster during servicing, it would be a great convenience fo have a bench mounted kinescope and speaker complete with a set of extension cables.

CAUTION: Do not short the kinescope second anode lead. Its short circuit current presents a considerable overload on the high voltage rectifier V117.

Adjustments Required.—Normally, only the r-f oscillator and mixer lines will require the attention of the service technician. All other circuits are either broad or very stable and hence will seldom require readjustment.

ORDER OF ALIGNMENT.—When a complete receiver alignment is necessary, it can be most conveniently performed in the following order:

(1) R-F unit
(2) Picture i-f transformers
(3) Picture i-f trap
(4) Sweep of picture i-f
(5) Ratio detector alignment
(6) Sound i-f alignment
(7) 4.5 Mc Trap Adjustment
(8) Check of overall response
(9) AGC control adjustment
(10) Horizontal oscillator alignment

R-F UNIT ALIGNMENT.—Disconnect the co-ax link from terminal 2 of the r-f unit terminal board and connect a 39 ohm composition resistor between lugs 1 and 2.

Detune T1 by backing the core all the way out of the coil.

Back the L44 core all the way out. Back the L203 core all the way out.

In order to align the r-f tuner, it will first be necessary to set the channel-13 oscillator to frequency. The shield over the bottom of the r-f unit must be in place when making any adjustments.

The oscillator may be aligned by adjusting it to beat with a crystal-calibrated heterodyne frequency meter. Couple the meter probe loosely to the receiver oscillator.

Set the channel selector switch to 13.

Adjust the heterodyne frequency meter to the correct frequency (236.75 mc).

Set the fine tuning control 30 degrees clockwise from the mechanical center of its range.

Adjust C1 for an audible beat on the heterodyne frequency meter.

Now that the channel-13 oscillator is set to frequency, we may proceed with the r-f alignment.

Turn the AGC control fully clockwise.

Obtain a 7.5 volt battery capable of withstanding appreciable current drain and connect the ends of a 1,000 ohm potentiometer across it. Connect the battery positive terminal to chassis and the potentiometer arm to terminal 3 of the r-f unit. Adjust the bias box potentiometer to produce —3.5 volts of bias at the r-f unit terminal board.

Connect the oscilloscope to the test point TP1 on top of the r-f unit.

Connect the r-f sweep oscillator to the receiver antenna terminals. The method of connection depends upon the output impedance of the sweep. The P300 connections for 300-ohm balanced or 72-ohm single-ended input are shown in the circuit schematic diagram. If the sweep oscillator has a 50-ohm or 72-ohm single-ended output, 300-ohm balanced output can be obtained by connecting as shown in Figure 10

Connect the signal generator loosely to the receiver antenna terminals.

Set the receiver channel switch to channel 8.

Set the sweep oscillator to cover channel 8.

Insert markers of channel 8 picture carrier and sound carrier, 181.25 mc. and 185.75 mc.

Adjust C9, C11, C16 and C22 for approximately correct curve shape, frequency, and band width as shown in Figure 11.

The correct adjustment of C22 is indicated by maximum amplitude of the curve midway between the markers. C16 tunes the r-f amplifier plate circuit and affects the frequency of the curve most noticeably. C9 tunes the converter grid circuit and affects the tilt of the curve most noticeably (assuming that C22 has been properly adjusted). C11 is the coupling adjustment and hence primarily affects the response band width.

Set the receiver channel switch to channel 6.

Adjust the heterodyne frequency meter to the correct frequency (108.75 mc.).

Set the fine tuning control 30 degrees clockwise from the mechanical center of its range.

Adjust L5 for an audible beat on the heterodyne frequency meter.

RCA Victor (continued)

ALIGNMENT PROCEDURE

17T200, 17T201, 17T202, 17T211, 17T220

Set the sweep generator to channel 6.

From the signal generator, insert channel 6 sound and picture carrier markers, 83.25 mc. and 87.75 mc.

Adjust L42, L45 and L49 for proper response as shown in Figure 11.

L42 is adjusted to give maximum amplitude of the curve between the markers. L45 primarily affects the tilt of the curve. L49 primarily affects the frequency of response.

Connect the "VoltOhymst" to the r-f unit test point TP1.

Adjust C7 for —3.0 volts at the test point.

Retouch L42, L45 and L49 for proper response if necessary. If necessary, retouch C11 for proper band width on channel 6. Continue these retouching adjustments until proper response is obtained and —3.0 volts of oscillator injection are present at the test point, TP1.

Set the receiver channel selector switch to channel 8 and readjust C1 for proper oscillator frequency.

Set the sweep oscillator and signal generator to channel 8.

Readjust C9, C16 and C22 for correct curve shape, frequency and band width. Readjust C11 only if necessary.

Switch the receiver, the sweep oscillator and signal generator to channel 13.

Adjust L52 for maximum amplitude of the curve midway between markers and then overshoot the adjustment by turning the slug in the same direction from the initial setting a little more than the amount of turning required to reach maximum amplitude of response.

Adjust C22 for maximum amplitude of response.

Turn off the sweep generator. Adjust the L43 core for correct channel 13 oscillator frequency, then overshoot the adjustment by turning the slug a little more in the same direction from the initial setting. Reset the oscillator to proper frequency by adjustment of C1.

Turn the sweep oscillator back on.

Check the response of channels 7 through 13 by switching the receiver channel switch, sweep oscillator and marker oscillator to each of these channels and observing the response and oscillator injection obtained. See Figure 11 for typical response curves. It should be found that all these channels have the proper shaped response with the markers above 80% response.

If the markers do not fall within this requirement, switch to channel 8 and readjust C9, C11, C16 and C22 as necessary. If C22 required adjustment, the adjustment should be overshot a small amount and corrected by adjustment of L52 to give maximum amplitude of response between the sound and picture carrier markers. The antenna circuit (L52, C22) is broad so that tracking is not particularly critical.

If the valley in the top of the selectivity curves for the high channels is deeper than normal, the curve can be flattened somewhat by decreasing the inductance of L44 by turning the core stud in. Be sure to check for undesirable resonant suck-outs on channels 7 and 8 if this is done.

Turn the sweep oscillator off and check the receiver channel 8 r-f oscillator frequency. If the oscillator is off frequency overshoot the adjustment of C1 and correct by adjusting L43.

Turn the receiver channel selector switch to channel 6. Adjust L5 for correct oscillator frequency.

Turn the sweep oscillator on and to channel 6 and observe the response curve. If necessary readjust L42, L45 and L49. It should not be necessary to touch C11.

Check the oscillator injection voltage at the test point TP1. If necessary adjust C7 to give —3 volts injection. If C7 is adjusted, switch to channel 8, and readjust C9 for proper curve shape, then recheck channel 6.

Switch the receiver through channel 6 down through channel 2 and check for normal response curve shapes and oscillator injection voltage.

Likewise check channels 7 through 13, stopping on 13 for the next step.

With the receiver on channel 13, check the receiver oscillator frequency. Correct by adjustment of C1 if necessary.

Adjust the oscillator to frequency on all channels by switching the receiver and the heterodyne frequency meter to each channel and adjusting the appropriate oscillator trimmer to obtain a beat on the freq. meter. It should be possible to adjust the oscillator to the correct frequency on all channels with the fine tuning control 30 degrees clockwise from the mechanical center of its range.

Channel Number	Picture Carrier Freq. Mc.	Sound Carrier Freq. Mc.	Receiver R-F Osc. Freq. Mc.	Channel Oscillator Adjustment
2	55.25	59.75	80.750	L1
3	61.25	65.75	86.750	L2
4	67.25	71.75	92.750	L3
5	77.25	81.75	102.750	L4
6	83.25	87.75	108.750	L5
7	175.25	179.75	200.750	L6
8	181.25	185.75	206.750	L7
9	187.25	191.75	212.750	L8
10	193.25	197.75	218.750	L9
11	199.25	203.75	224.750	L10
12	205.25	209.75	230.750	L11
13	211.25	215.75	236.750	C1

Switch to channel 8 and observe the response.

Adjust T1 clockwise while watching the change in response. When T1 is properly adjusted, the selectivity curve will be slightly wider with a slightly deeper valley in its top.

Switch through all channels and observe response, oscillator injection and r-f oscillator frequency. Minor touch-ups of adjustments may be made at this time. However, if C7 or C9 are changed appreciably, then a recheck of the oscillator frequency on all channels should be made.

Reconnect the link from T101 to terminal 2 of the r-f unit terminal board.

Since T1 was adjusted during the r-f unit alignment it will be necessary to sweep the overall i-f response.

R-F UNIT TUBE CHANGES.—Since most of the circuits are low capacitance circuits the r-f unit may require readjustments when the tubes are changed.

If the 6CB6 r-f amplifier tube is changed, it may be necessary to readjust C16 and C22.

If the 6J6 oscillator and mixer tube is changed, then more extensive adjustments are required.

For good conversion efficiency, the oscillator injection to a triode mixer must be held reasonably close to the optimum value. Although there is some latitude in this level, it is nearly expended in the normal variation in injection from channel to channel. Consequently, the adjustment of C7 is limited primarily to establishing the conditions for good conversion. Since changes in oscillator injection affect conversion gain, it also affects the input capacity of the mixer, thus also affecting tracking of the mixer grid circuit. These tube variations with their consequent effect on circuit alignment thereby require readjustment of the r-f unit if maximum conversion efficiency is to be retained after the 6J6 tube is changed. It may be possible, however, to try several 6J6 tubes and select one which gives satisfactory performance without realignment.

PICTURE I-F TRANSFORMER ADJUSTMENTS.—Connect the "VoltOhmyst" to the junction of R142 and R143.

Turn the AGC control fully clockwise.

Obtain a 7.5 volt battery capable of withstanding appreciable current drain and connect the ends of a 1,000 ohm potentiometer across it. Connect the battery positive terminal to chassis and the potentiometer arm to the junction R142 and R143. Adjust the potentiometer for —5.0 volts indication on the "VoltOhmyst".

Set the channel switch to channel number 9, 10 or 11.

Connect the "VoltOhmyst" to pin 4 of V110 and to ground.

Connect the output of the signal generator to the mixer grid test point TP2 in series with a 1500 mmf ceramic capacitor.

Connect a separate —5 volt bias supply to TP1 with the positive terminal to ground.

Set the generator to each of the following frequencies and with a thin fiber screwdriver tune the specified adjustment for maximum indication on the "VoltOhmyst". In each instance the generator should be checked against a crystal calibrator to insure that the generator is on frequency.

17T200, 17T201, 17T202, 17T211, 17T220

ALIGNMENT PROCEDURE

RCA Victor (continued)

Adjust the signal generator output to give 3 volts on the "VoltOhmyst" as the final adjustment is made.

(1) 24.25 mc.—T107
(2) 25.5 mc.—T106
(3) 22.75 mc.—T105

PICTURE I-F TRAP ADJUSTMENT.—With the same connections as above, tune the generator to 27.00 mc. and adjust the T104 top core for minimum d-c on the "VoltOhmyst". Set the generator output so that this minimum is about 3 volts when final adjustment is made. If necessary, the i-f bias may be reduced in order to obtain the 3 volt reading on the "VoltOhmyst".

SWEEP ALIGNMENT OF PIX I-F.—To align T1 and T104, connect the sweep generator to the mixer grid test point TP2. In series with a 1500 mmf ceramic capacitor use the shortest leads possible, with not more than one inch of unshielded lead at the end of the sweep cable. Connect the sweep ground lead to the r-f unit outer shield.

Connect a separate —5.0 volt bias supply to TP1 with the positive terminal connected to gnd.

Set the channel selector switch between channels 2 and 13.

Clip 330 ohm resistors across terminals A and B of T106 and T107.

Preset C115 to minimum capacity.

Adjust the bias box potentiometer to obtain —5.0 volts of bias as measured by a "VoltOhmyst" at the junction of R142 and R143. Leave the AGC control fully clockwise.

Connect a 180 ohm composition resistor from pin 5 of V106 to terminal A of T105. Connect the oscilloscope diode probe to pin 5 of V106 and to ground.

Couple the signal generator loosely to the diode probe in order to obtain markers.

Adjust T1 (top) and T104 (bottom) for maximum gain and with 25.5 mc. at 70% of maximum response.

Set the sweep output to give 0.3 volt peak-to-peak on the oscilloscope when making the final touch on the above adjustment.

Adjust C115 until 22.25 mc. is at 70% response with respect to the low frequency shoulder of the curve as shown in Figure 12.

Disconnect the diode probe, the 180 ohm and two 330 ohm resistors.

Connect the oscilloscope to pin 4 of V110 socket.

Leave the sweep generator connected to the mixer grid test point TP2 with the shortest leads possible.

Adjust the output of the sweep generator to obtain 3.0 volts peak-to-peak on the oscilloscope.

Couple the signal generator loosely to the grid of the first pix i-f amplifier. Adjust the output of the signal generator to produce small markers on the response curve.

Retouch T105, T106 and T107 to obtain the response shown in Figure 13.

It is especially important that the 22.4 mc. marker should fall at 55% on the overall i-f response curve. If the marker should fall appreciably higher than 55%, trouble may be experienced with sound in the picture. If the marker should fall appreciably below 55% response, the sound sensitivity may be reduced and may cause the sound to be noisy in weak signal areas.

RATIO DETECTOR ALIGNMENT.—Set the signal generator at 4.5 mc. and connect it to the first sound i-f grid, pin 1 of V101.

As an alternate source of signal, the RCA WR39B or WR39C calibrator may be employed. In such a case, connect the calibrator to the grid of the third pix i-f amplifier, pin 1 of V108.

Set the frequency of the calibrator to 25.50 mc. (pix carrier) and modulate with 4.5 mc. crystal. The 4.5 mc. signal will be picked off at L102 and amplified through the sound i-f amplifier.

Connect the "VoltOhmyst" to pin 2 of V103.

Tune the ratio detector primary, T102 top core for maximum d-c output on the "VoltOhmyst". Adjust the signal level from the signal generator for 6 volts on the "VoltOhmyst" when finally peaked. This is approximately the operating level of the ratio detector for average signals.

Connect the "VoltOhmyst" to the junction of R106 and C108.

Tune the ratio detector secondary T102 bottom core for zero d-c on the "VoltOhmyst".

Repeat adjustments of T102 top for maximum d-c at pin 2 of V103 and T102 bottom for zero d-c at the junction of R106 and C108. Make the final adjustments with the signal input level adjusted to produce 6 volts d-c on the "VoltOhmyst" at pin 2 of V103.

SOUND I-F ALIGNMENT.—Connect the signal generator to the first sound i-f amplifier grid, pin 1 of V101.

As an alternate source of signal, the RCA WR39B or WR39C calibrator may be employed as above.

Connect the "VoltOhmyst" to pin 2 of V103.

Tune the T101 top core for maximum d-c on the "VoltOhmyst".

The output from the signal generator should be set to produce approximately 6.0 volts on the "VoltOhmyst" when the final touches on the above adjustment are made.

4.5 MC. TRAP ADJUSTMENT.—Connect the signal generator in series with a 1,000 ohm resistor to pin 2 of V109. Set the generator to 4.5 mc. and modulate it 30% with 400 cycles. Set the output to approximately 0.5 volts.

Short the third pix i-f grid to ground, pin 1, V108, to prevent noise from masking the output indication.

Connect the crystal diode probe of an oscilloscope to the plate of the video amplifier, pin 8 of V110.

Adjust the core of L103 for minimum output on the oscilloscope.

Remove the short from pin 1, V108 to ground.

As an alternate method, this step may be omitted at this point in the alignment procedure and the adjustment made "on the air" after the alignment is completed.

If this is done, tune in a station and observe the picture on the kinescope. If no 4.5 mc. beat is present in the picture, when the fine tuning control is set for proper oscillator-frequency, then L103 requires no adjustment. If a 4.5 mc. beat is present, turn the fine tuning control slightly clockwise so as to exaggerate the beat and then adjust L103 for minimum beat.

CHECK OF OVERALL RESPONSE.—If desired, the overall response of the receiver can be checked on each channel.

Connect the r-f sweep generator to the receiver antenna input terminals. If necessary, employ one of the pads shown in Figure 10 to match the sweep output cable to the r-f unit.

Connect the signal generator loosely to the first pix i-f amplifier grid.

Adjust the bias potentiometer to obtain —5.0 volts of bias as measured by a "VoltOhmyst" at the junction of R142 and R143.

Connect the oscilloscope to pin 4 of V110.

Check the response of channels 2 through 13 by switching the receiver channel switch and sweep oscillator to each of these channels and observing the response obtained. On each channel, adjust the output of the sweep generator to obtain 3.0 volts peak-to-peak on the oscilloscope.

I-F markers at 22.4 mc., 24.75 mc. and 25.5 mc. should be provided by the signal generator.

The response obtained in this manner should be very similar to that shown in Figure 13.

Some curves may show a 10% sag in the top between 22.75 mc. and 24.75 mc. while others may show a 10% peak in this region. This may be considered normal.

If the picture carrier is consistently high or low on all channels, T106 may be adjusted slightly. Do not adjust T105.

AGC CONTROL ADJUSTMENT.—Disconnect all test equipment except the oscilloscope which should be connected to pin 8 of V110.

Connect an antenna to the receiver antenna terminals.

Turn the AGC control fully counter-clockwise.

Tune in a strong signal and adjust the oscilloscope to see the video waveform.

Turn the AGC control clockwise until the tips of sync begin to be compressed, then counter-clockwise until no compression is obtained.

RCA Victor (continued)

ALIGNMENT PROCEDURE

17T200, 17T201, 17T202, 17T211, 17T220

HORIZONTAL OSCILLATOR ADJUSTMENT.—Normally the adjustment of the horizontal oscillator is not considered to be a part of the alignment procedure, but since the oscillator waveform adjustment may require the use of an oscilloscope, it can not be done conveniently in the field. The waveform adjustment is made at the factory and normally should not require readjustment in the field. However, the waveform adjustment should be checked whenever the receiver is aligned or whenever the horizontal oscillator operation is improper.

Horizontal Frequency Adjustment.—Tune in a station and sync the picture. If the picture cannot be synchronized with the horizontal hold control R170B, then adjust the T110 frequency core on the rear apron until the picture will synchronize. If the picture still will not sync, turn the T110 waveform adjustment core (under the chassis) out of the coil several turns from its original position and readjust the T110 frequency core until the picture is synchronized.

Examine the width and linearity of the picture. If picture width or linearity is incorrect, adjust the horizontal drive control C161B, the width control L106 and the linearity control L108 until the picture is correct.

Horizontal Oscillator Waveform Adjustment.—The horizontal oscillator waveform may be adjusted by either of two methods. The method outlined in paragraph A below may be employed in the field when an oscilloscope is not available. The service shop method outlined in paragraph B below requires the use of an oscilloscope.

A.—Turn the horizontal hold control completely clockwise. Place adjustment tools on both cores of T110 and be prepared to make simultaneous adjustments while watching the picture on the screen. First, turn the T110 frequency core (on the rear apron) until the picture falls out of sync and three or four diagonal black bars sloping down to the right appear on the screen. Then, turn the waveform adjustment core (under the chassis) into the coil while at the same time adjusting the frequency core so as to maintain three or four diagonal black bars on the screen. Continue this procedure until the oscillator begins to motorboat, then turn the waveform adjustment core out until the motorboating just stops. As a check, turn the T110 frequency core until the picture is synchronized then reverse the direction of rotation of the core until the picture falls out of sync with the diagonal bars sloping down to the right. Continue to turn the frequency core in the same direction. No more than three or four bars should appear on the screen. Instead, the horizontal oscillator should begin the motorboat. Retouch the adjustment of the T110 waveform adjustment core if necessary until this condition is obtained.

B.—Connect the low capacity probe of an oscilloscope to terminal C of T110. Turn the horizontal hold control one-quarter turn from the clockwise position so that the picture is in sync. The pattern on the oscilloscope should be as shown in Figure 14. Adjust the waveform adjustment core of T110 until the two peaks are at the same height. During this adjustment, the picture must be kept in sync by readjusting the hold control if necessary.

This adjustment is very important for correct operation of the circuit. If the broad peak of the wave on the oscilloscope is lower than the sharp peak, the noise immunity becomes poorer, the stabilizing effect of the tuned circuit is reduced and drift of the oscillator becomes more serious. On the other hand, if the broad peak is higher than the sharp peak, the oscillator is overstabilized, the pull-in range becomes inadequate and the broad peak can cause double triggering of the oscillator when the hold control approaches the clockwise position.

Remove the oscilloscope upon completion of this adjustment.

Horizontal Locking Range Adjustment.—Set the horizontal hold control to the full counter-clockwise position. Momentarily remove the signal by switching off channel then back. The picture may remain in sync. If so turn the T110 frequency core slightly and momentarily switch off channel. Repeat until the picture falls out of sync with the diagonal lines sloping down to the left. Slowly turn the horizontal hold control clockwise and note the least number of diagonal bars obtained just before the picture pulls into sync.

If more than 3 bars are present just before the picture pulls into sync, adjust the horizontal locking range trimmer C161A slightly clockwise. If less than 2 bars are present, adjust C161A slightly counter-clockwise. Turn the horizontal hold control counter-clockwise, momentarily remove the signal and recheck the number of bars present at the pull-in point. Repeat this procedure until 2 or 3 bars are present.

Turn the horizontal hold control to the maximum clockwise position. Adjust the T110 frequency core so that the diagonal bar sloping down to the right appears on the screen and then reverse the direction of adjustment so that bar just moves to the left side of the screen leaving the picture in synchronization.

SENSITIVITY CHECK.—A comparative sensitivity check can be made by operating the receiver on a weak signal from a television station and comparing the picture and sound obtained to that obtained on other receivers under the same conditions.

This weak signal can be obtained by connecting the shop antenna to the receiver through a ladder type attenuator pad. The number of stages in the pad depends upon the signal strength available at the antenna. A sufficient number of stages should be inserted so that a somewhat less than normal contrast picture is obtained when the picture control is at the maximum clockwise position. Only carbon type resistors should be used to construct the pad.

RESPONSE CURVES are shown in the classical manner of presentation, that is with "response up" and low frequency to the left. The manner in which they will be seen in a given test set-up will depend upon the characteristics of the oscilloscope and the sweep generator. The curves may be seen inverted and, or switched from left to right depending on the deflection polarity of the oscilloscope and the phasing of the sweep generator.

NOTE ON R-F UNIT ALIGNMENT.—Because of the frequency spectrum involved and the nature of the device, many of the r-f unit leads and components are critical in some respects. Even the power supply leads form loops which couple to the tuned circuits, and if resonant at any of the frequencies involved in the performance of the tuner, may cause serious departures from the desired characteristics. In the design of the receiver these undesirable resonant loops have been shifted far enough away in frequency to allow reasonable latitude in their components and physical arrangement without being troublesome. When the r-f unit is aligned in the receiver, no trouble from resonant loops should be experienced. However, if the unit is aligned in a jig separate from the receiver, attention should be paid to insure that unwanted resonances do not exist which might present a faulty representation of r-f unit alignment.

A resonant circuit exists between the r-f tuner chassis and the outer shield box, which couples into the antenna and fr-plate circuits. The frequency of this resonance depends on the physical structure of the shield box, and the capacitance between the tuner chassis and the front plate. In the KRK8 units, this resonance should fall between 120 and 135 mc. and is controlled in the design by using insulating washers of different thicknesses (in the front plate to tuner chassis mounting) to compensate for differences in the shield boxes of different models of receivers. The performance of the tuner, particularly on channels 7 and 8 will be impaired if the proper washers for the particular shield box involved are not used. Obviously then, if the r-f unit is removed for service, the washers should be replaced in the correct order when the unit is replaced.

RCA Victor (continued)

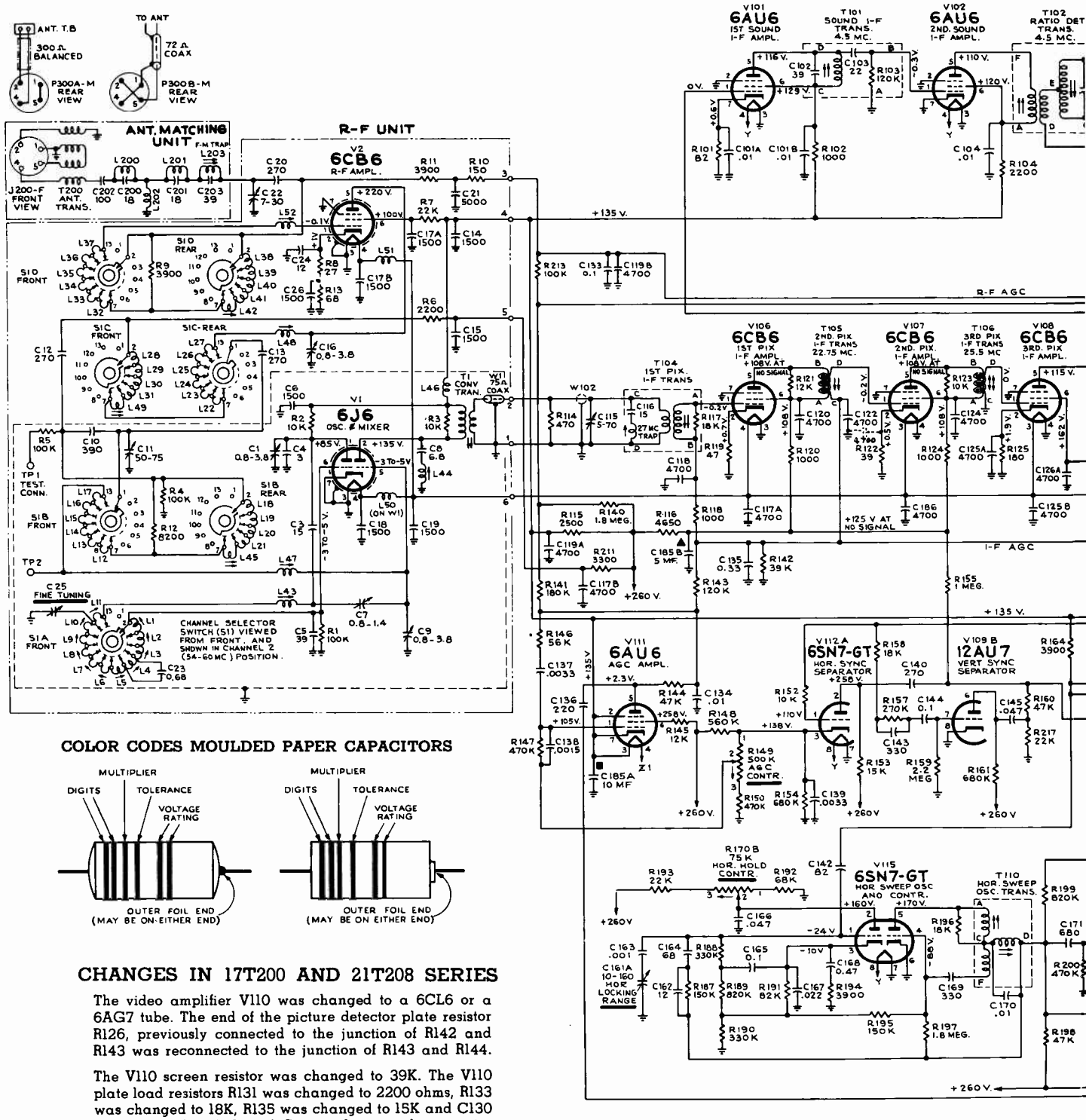

COLOR CODES MOULDED PAPER CAPACITORS

CHANGES IN 17T200 AND 21T208 SERIES

The video amplifier V110 was changed to a 6CL6 or a 6AG7 tube. The end of the picture detector plate resistor R126, previously connected to the junction of R142 and R143 was reconnected to the junction of R143 and R144.

The V110 screen resistor was changed to 39K. The V110 plate load resistors R131 was changed to 2200 ohms, R133 was changed to 18K, R135 was changed to 15K and C130 was changed to 270 mmf. Picture detector plate resistor R126 was changed to 2.2 meg and the end previously connected to the junction of R143 and R144 was reconnected to the junction of R200 and R201 in the V116 grid circuit. Brightness control bleeder resistor R183 was changed to 150K, R185 was omitted and terminal 1 of R184 connected to ground.

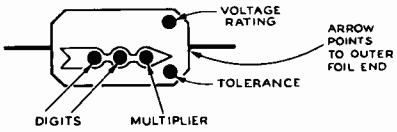

17T200, 17T201, 17T202, 17T211, 17T220

CIRCUIT SCHEMATIC DIAGRAM

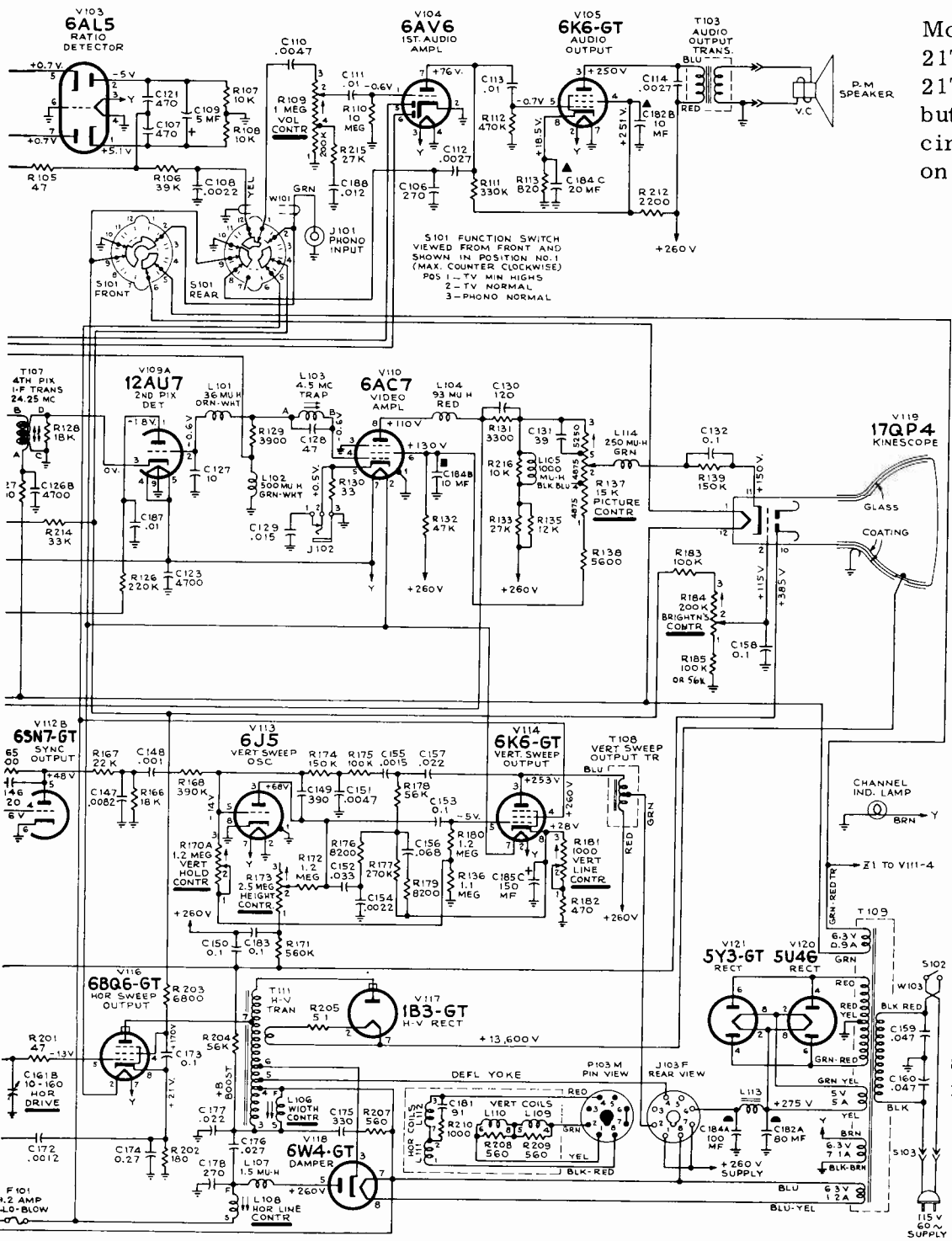

Models 21T208, 21T217, 21T218, 21T227, 21T228, 21T229, employ 21AP4, but use almost identical circuit to the one shown on these pages.

In weak signal areas, noisy sound can be improved by following these suggestions. Watch the picture from the top of the chassis, turn T105 one-half to one turn clockwise to improve sound. This should not weaken or decrease picture contrast. On high channels, a slight improvement in both picture and sound may be obtained by retouching the R.F. tuner antenna trimmer C22, located between 6CB6 R.F. tube and antenna matching transformer unit. In some cases, adjusting the tuning of T101 sound I.F. transformer may improve sound.

All resistance values in ohms. K=1000.

All capacitance values less than 1 in MF and above 1 in MMF unless otherwise noted.

All voltages measured with "VoltOhmyst" and with no signal input. Voltages should hold within ±20% with 117 v. a-c supply.

Direction of arrows at controls indicates clockwise rotation.

In some receivers, V119-10 was connected to the junction of R171 and C183.

Schematic Diagram

RCA Victor (continued)

ALIGNMENT DATA

17T200, 17T201, 17T202, 17T211, 17T220

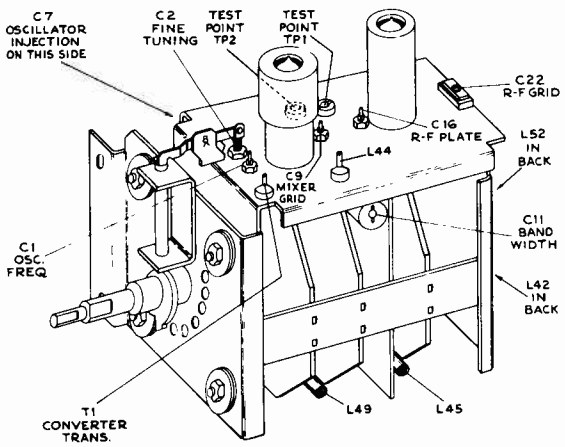

Figure 6—R-F Unit Adjustments

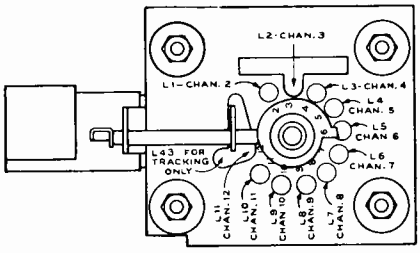

Figure 7—R-F Oscillator Adjustments

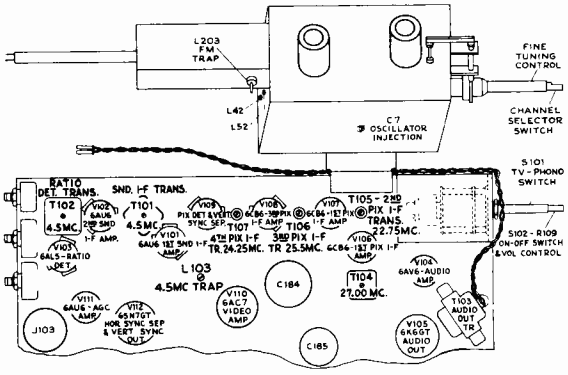

Figure 8—Top Chassis Adjustments

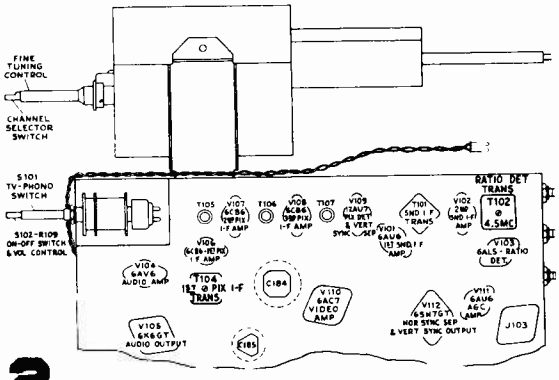

Figure 9—Bottom Chassis Adjustments

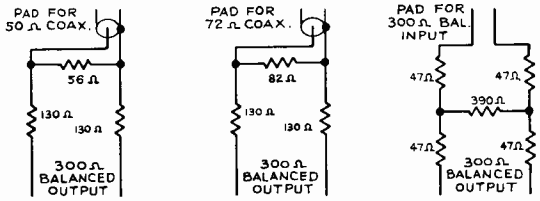

Figure 10—Sweep Attenuator Pads

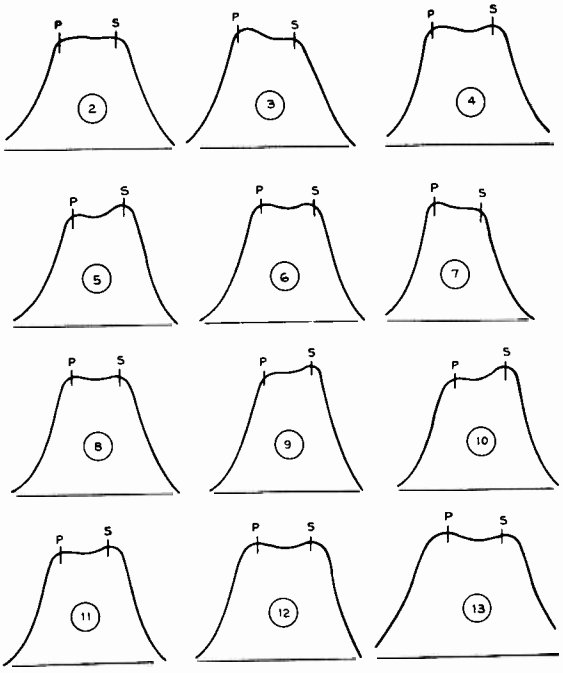

Figure 11—R-F Response

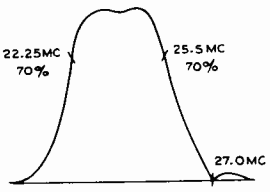

Figure 12 T1 and T104 Response

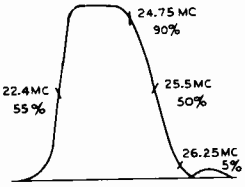

Figure 13 Over-all I-F Response

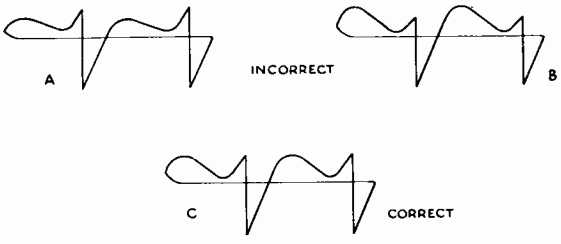

Figure 14—Horizontal Oscillator Wave Forms

RCA VICTOR MODELS 17T250DE, 17T261DE

Chassis No. KCS74

A complete circuit diagram is printed across the next two pages, over. For alignment information refer to material on pages 131 to 135, in the 1952 Television Servicing manual, Volume TV-6. That alignment data presented in connection with other RCA Victor sets is applicable to these additional models.

ION TRAP MAGNET ADJUSTMENT. — Set the ion trap magnet approximately in the position shown in Figure 1. Starting from this position immediately adjust the magnet by moving it forward or backward at the same time rotating it slightly around the neck of the kinescope for the brightest raster on the screen. Reduce the brightness control setting until the raster is slightly above average brilliance. Turn the focus control (shown in Figure 1) until the line structure of the raster is clearly visible. Readjust the ion trap magnet for maximum raster brilliance. The final touches of this adjustment should be made with the brightness control at the maximum clockwise position with which good line focus can be maintained.

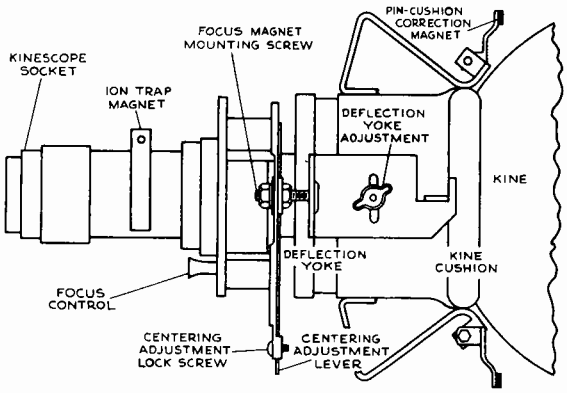

Figure 1—Yoke and Focus Magnet Adjustments

DEFLECTION YOKE ADJUSTMENT. — If the lines of the raster are not horizontal or squared with the picture mask, rotate the deflection yoke until this condition is obtained. Tighten the yoke adjustment wing screw.

PICTURE ADJUSTMENTS. — It will now be necessary to obtain a test pattern picture in order to make further adjustments. Connect the antenna transmission line to the receiver.

If the Horizontal Oscillator and AGC System are operating properly, it should be possible to sync the picture at this point. However, if the AGC control is misadjusted, and the receiver is overloading, it may be impossible to sync the picture.

If the receiver is overloading, turn R181 on the rear apron (see Figure 2) counter-clockwise until the set operates normally and the picture can be synced.

CHECK OF HORIZONTAL OSCILLATOR ALIGNMENT. — Turn the horizontal hold control to the extreme counter-clockwise position. The picture should remain in horizontal sync. Momentarily remove the signal by switching off channel then back. Normally the picture will be out of sync. Turn the control clockwise slowly. The number of diagonal black bars will be gradually reduced and when only 2 or 3 bars sloping downward to the left are obtained, the picture will pull into sync upon slight additional clockwise rotation of the control. Pull-in should occur before the control has been turned 120 degrees from the extreme counter-clockwise position. The picture should remain in sync for approximately 90 degrees of additional clockwise rotation of the control. At the extreme clockwise position, the picture should remain in sync and should not show a black bar in the picture.

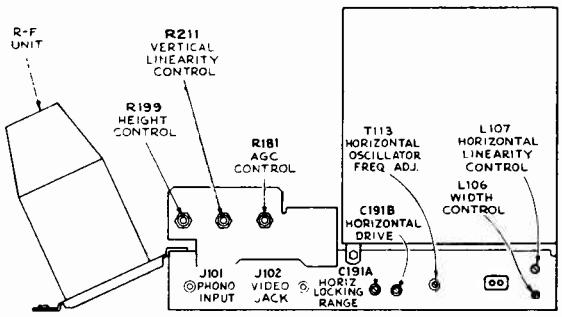

Figure 2—Rear Chassis Adjustments

CENTERING ADJUSTMENT. — No electrical centering controls are provided. Centering is accomplished by means of a separate plate on the focus magnet. The centering plates include a locking screw which must be loosened before centering. Up and down adjustment of the plate moves the picture side to side and sidewise adjustment moves the picture up and down.

If a corner of the raster is shadowed, check the position of the ion trap magnet. Reposition the magnet within the range of maximum raster brightness to eliminate the shadow and recenter the picture by adjustment of the focus magnet plate. In no case should the magnet be adjusted to cause any loss of brightness since such operation may cause immediate or eventual damage to the tube. In some cases it may be necessary to shift the position of the focus magnet in order to eliminate a corner shadow.

WIDTH, DRIVE AND HORIZONTAL LINEARITY ADJUSTMENTS. — Adjustment of the horizontal drive control affects the high voltage applied to the kinescope. In order to obtain the highest possible voltage hence the brightest and best focused picture, adjust horizontal drive trimmer C191B counter-clockwise until the picture begins to "wrinkle" in the middle then clockwise until the "wrinkle" disappears.

Turn the horizontal linearity control L107 clockwise until the picture begins to "wrinkle" on the right and then counter-clockwise until the "wrinkle" disappears and best linearity is obtained.

Adjust the width control L106 to obtain correct picture width.

A slight readjustment of these three controls may be necessary to obtain the best linearity.

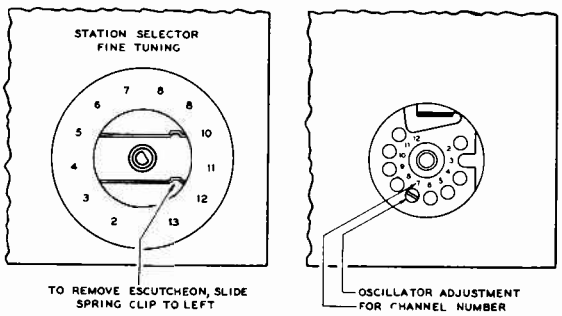

Figure 3—R-F Oscillator Adjustments

RCA Victor Models 17T250DE and 17T261DE, using Chassis KCS-74.

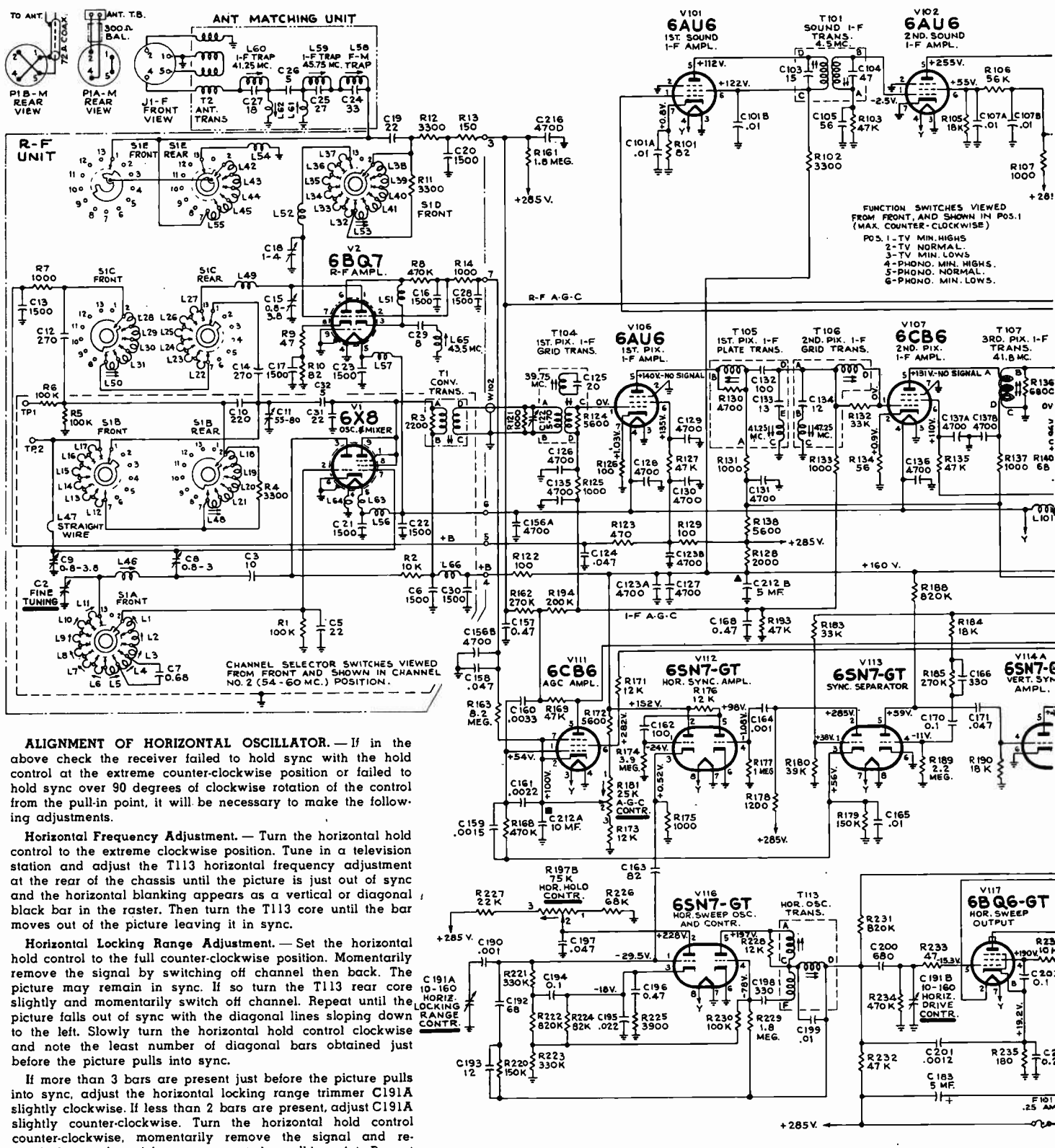

ALIGNMENT OF HORIZONTAL OSCILLATOR. — If in the above check the receiver failed to hold sync with the hold control at the extreme counter-clockwise position or failed to hold sync over 90 degrees of clockwise rotation of the control from the pull-in point, it will be necessary to make the following adjustments.

Horizontal Frequency Adjustment. — Turn the horizontal hold control to the extreme clockwise position. Tune in a television station and adjust the T113 horizontal frequency adjustment at the rear of the chassis until the picture is just out of sync and the horizontal blanking appears as a vertical or diagonal black bar in the raster. Then turn the T113 core until the bar moves out of the picture leaving it in sync.

Horizontal Locking Range Adjustment. — Set the horizontal hold control to the full counter-clockwise position. Momentarily remove the signal by switching off channel then back. The picture may remain in sync. If so turn the T113 rear core slightly and momentarily switch off channel. Repeat until the picture falls out of sync with the diagonal lines sloping down to the left. Slowly turn the horizontal hold control clockwise and note the least number of diagonal bars obtained just before the picture pulls into sync.

If more than 3 bars are present just before the picture pulls into sync, adjust the horizontal locking range trimmer C191A slightly clockwise. If less than 2 bars are present, adjust C191A slightly counter-clockwise. Turn the horizontal hold control counter-clockwise, momentarily remove the signal and re-check the number of bars present at the pull-in point. Repeat this procedure until 2 or 3 bars are present.

All resistance values in ohms. K = 1000.
All capacitance values less than 1 in MF and above 1 in MMF unless otherwise noted.

Coil resistance values less than 1 ohm are not shown.
Direction of arrows at controls indicates clockwise rotation.

17T250DE, 17T261DE SCHEMATIC DIAGRAM

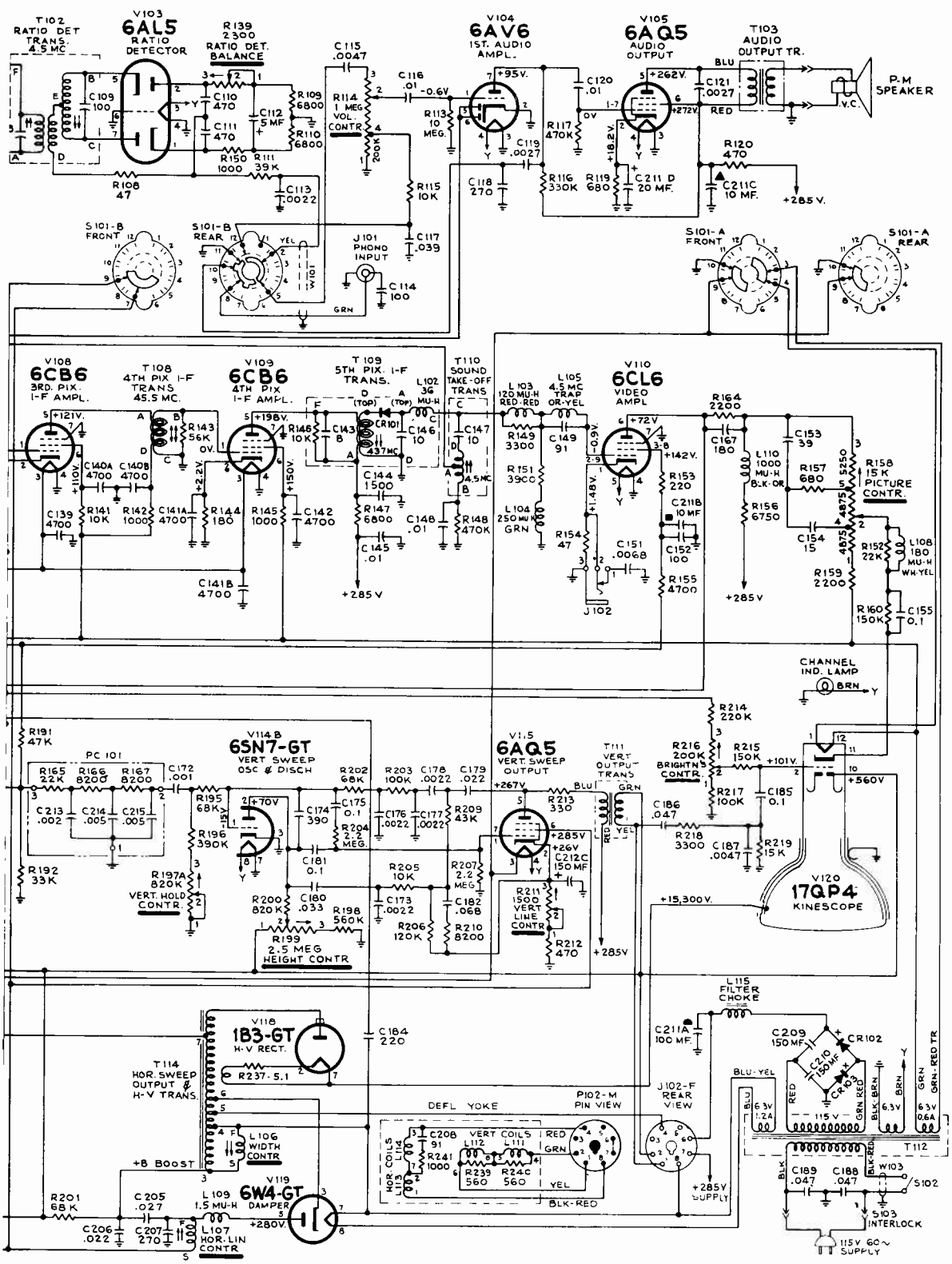

Circuit Schematic Diagram

ll voltages measured with "VoltOhmyst" with no signal input. Voltages should l within ±20% with 117 v. a-c supply.

For waveform photographs and service suggestions, refer to the Fourth Edition of the 17T153 Service Data.

In some receivers, a 6AG7 tube may be employed in place of the 6CL6 video amplifier.

Raytheon

RAYTHEON TELEVISION AND RADIO CORPORATION

A Subsidiary of Raytheon Manufacturing Company

MODEL IDENTIFICATION CHART

Model	Chassis	Sales Name
M-1733A	17T1	Saratoga
*M-1734A	17T2	Northbrook
C-1735A	17T1	Lakewood
C-1736A	17T1	Glendale
M-2107A	21T1	Beverly
C-2108A	21T1	Westport
*C-2109A	21T2	Montclair
C-2110A	21T1	Malibu
C-2111A	21T1	Plymouth

** NOTE: Models include Raytheon's Continuous UHF Tuner*

17T1, 17T2, 21T1 AND 21T2 CHASSIS

SERVICE ADJUSTMENTS

Horizontal Hold Control (L-30):

The horizontal hold control is located on the rear flange of the chassis and should be adjusted in the following manner.

Set the picture control to its normal operating position. Turn the thumb screw clockwise until it reaches its stop. Turn two complete turns counter-clockwise. The thumb screw is a vernier adjustment and will then be in the center of its range.

Turn the iron core with a small screwdriver or adjusting tool until the picture is steady (no horizontal movement). Set the core to the middle of its range.

After the iron core has been properly adjusted the thumb screw should then be used as a vernier adjustment to control synchronization when necessary.

Horizontal Linearity Magnet - 17" only

The horizontal linearity magnet affects the linearity of the right side of the picture only. The magnet pulls or stretches the right side and has a greater effect closer to the picture tube.

Anti-Pin Cushion Magnet - 21" only

Adjust centering until an edge of the raster is visible. Loosen the positioning screws and slide the magnet backward or forward until the edge of the raster is vertically straight. If keystoning is noticed adjust magnets in vertical plane.

PRE-ALIGNMENT PRECAUTIONS

1. If sweep generator does not have a balanced output, connect a 150 ohm resistor in series with the ground lead and 150 ohms minus the internal resistance of the generator in series with the hot lead.
2. Connect a 1000 mmf capacitor across scope terminals and a 10K ohm resistor in series with hot scope lead as close to test point as possible.
3. Connect signal generator through a 1000 mmf capacitor.
4. Set F-S-L switch to "Fringe" position.
5. When aligning the IF Amplifier be sure tuner is turned to high band channel 13.

Ion Trap Magnet

The position of the ion trap magnet MUST be over the grid of the picture tube (second cylinder from the base identified by a flared forward lip) If the adjustment is necessary, loosen the wing nut and rotate until the position which gives maximum illumination is found. Adjust the screw for maximum illumination. Repeat the above two steps. Rotate and slide magnet until the best focus position is found. Tighten wing nut.

Centering Magnet

The centering magnet should be rotated and the control adjusted until the picture is properly framed keeping in mind that the effect of the control is governed by the position of rotation. If the control is above or below the neck of the picture tube, the picture will be moved up or down. To the left or right of the neck of the picture tube, the picture will be moved either to the left or right.

Deflection Yoke

The correct position for the deflection yoke is as far forward on the neck of the picture tube as the shape of the tube will allow. Tube shadow or a tilted raster may result from an incorrectly positioned yoke. If a positioning adjustment is necessary, loosen the yoke wing nut located at the top of the picture tube assembly.

Top Chassis View

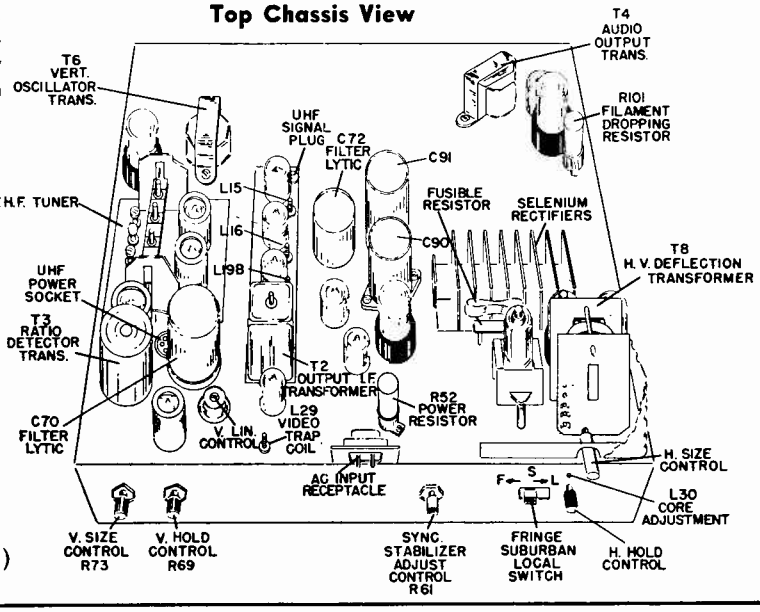

(Continued on next page.)

RAYTHEON

VIDEO I-F ALIGNMENT

(Continued)

Step No.	Signal Generator Freq. (mc.)	Sweep Generator Freq. (mc.)	Signal Input Point	Output Point	Remarks	Adjust	Response
1	23.5 26.2	25	Pin 1 of tube 5	Scope at junction of L25, R27, C58	Connect short between pin 5 and pin 6 of tube 4	T2 pri. T2 sec. Coupling rod	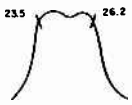
2	Calibrate scope for sensitivity of one volt per inch. Adjust peak response for one inch deflection. Marker should fall 10% down. If response curve is not as shown readjust coupling rod (bottom of T2) for proper bandwidth and T2 primary and secondary for flat response and maximum gain.						
3	21.4	———	Converter grid *	VTVM at junction of L25, R27, C58	Remove Short. Adjust generator for output of approx. 2 volts DC	L19-B (top of Chassis)	Maximum Reading
4	26.5	———	Converter grid *	VTVM at junction of L25, R27, C58	Adjust generator for output of approx. 2 volts DC	L19-A (bottom of chassis)	Maximum Reading
5	21.4	———	Converter grid *	VTVM at junction of L25, R27, C58	Remove Short. Adjust generator for output of approx. 2 volts DC	L19-B (top of chassis)	Maximum Reading
6	23.8	———	Converter grid *	VTVM at junction of L25, R27, C58	Adjust generator for output of approx. 2 volts DC	L16	Maximum Reading
7	25.0	———	Converter grid *	VTVM at junction of L25, R27, C58	Adjust generator for output of approx. 2 volts DC	L15	Maximum Reading
8	———	25	Converter grid *	Scope at junction of L25, R27, C58	———	T2 pri. (top of chassis)	Rock for flat response
9	23.5 26.5	25	Converter grid *	Scope at junction of L25, R27, C58	Marker should be 50% down and response curve should be as shown — If not, repeat alignment.	Check point only	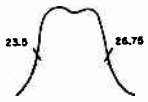

Picture IF frequency 26.75 MC — Sound. IF frequency 22.25 MC.

* NOTE: A very short lead from the generator must be used to prevent regeneration.

VIDEO TRAP COIL (L-29) ADJUSTMENT

1. Tune in a station.
2. Adjust the tuner until sound bars just appear.
3. Turn L-29 slug all the way out (counter-clockwise).
4. Turn the slug in (clockwise) until the horizontal scanning lines are smooth and continuous

SOUND I-F ALIGNMENT

Short antenna to ground.

1	4.5	———	Junction of L25, R27, C58	VTVM at junction of R44, C65, C67	———	T3 pri. (bottom of chassis)	Maximum Reading
2	———	4.5	Junction of L25, R27, C58	Scope at junction of R44, C65, C67	Sweep approximately ±100 kc—Adjust for maximum linearity	T3 sec. (bottom of chassis)	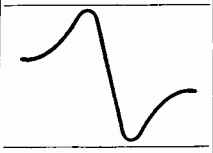
3	———	4.5	Junction of L25, R27, C58	Scope at junction of R44, C65, C67	Sweep approximately ±100 kc—Adjust for symmetry of peaks	T3 pri. (bottom of chassis)	

NOTE: L-29 coil should only be adjusted as prescribed. Do not adjust for maximum sound.

Raytheon 17T1, 17T2, 21T1, 21T2 Chassis

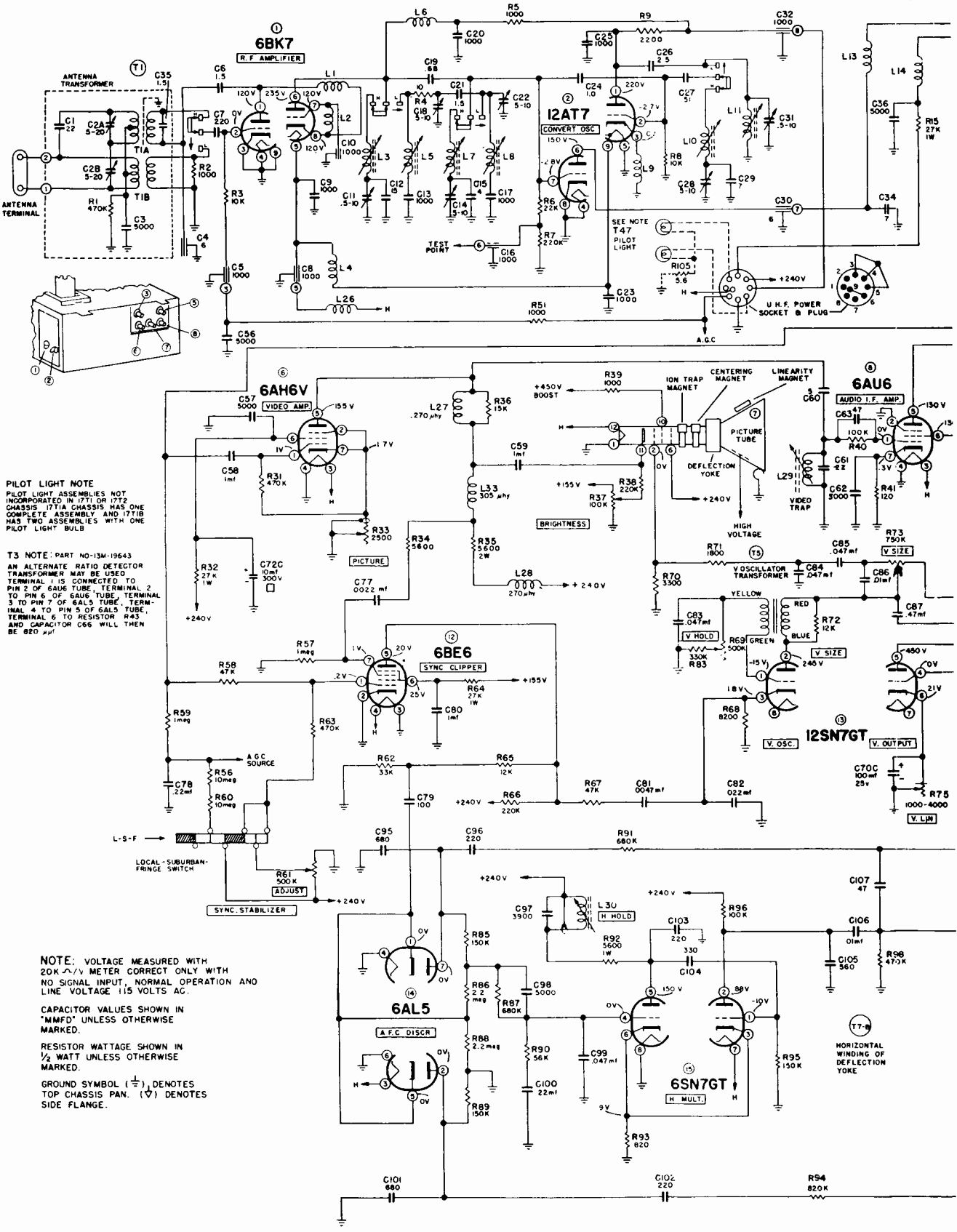

PILOT LIGHT NOTE

PILOT LIGHT ASSEMBLIES NOT INCORPORATED IN 17T1 OR 17T2 CHASSIS. 17T1A CHASSIS HAS ONE COMPLETE ASSEMBLY AND 17T1B HAS TWO ASSEMBLIES WITH ONE PILOT LIGHT BULB

T3 NOTE: PART NO-13M-19643

AN ALTERNATE RATIO DETECTOR TRANSFORMER MAY BE USED. TERMINAL 1 IS CONNECTED TO PIN 2 OF 6AU6 TUBE, TERMINAL 2 TO PIN 6 OF 6AU6 TUBE, TERMINAL 3 TO PIN 7 OF 6AL5 TUBE, TERMINAL 4 TO PIN 5 OF 6AL5 TUBE, TERMINAL 6 TO RESISTOR R43 AND CAPACITOR C66 WILL THEN BE 820 μμf

NOTE: VOLTAGE MEASURED WITH 20K Ω/V METER CORRECT ONLY WITH NO SIGNAL INPUT, NORMAL OPERATION AND LINE VOLTAGE 115 VOLTS AC.

CAPACITOR VALUES SHOWN IN "MMFD" UNLESS OTHERWISE MARKED.

RESISTOR WATTAGE SHOWN IN ½ WATT UNLESS OTHERWISE MARKED.

GROUND SYMBOL (⏚) DENOTES TOP CHASSIS PAN. (▽) DENOTES SIDE FLANGE.

Raytheon 17T1, 17T2, 21T1, 21T2 Chassis

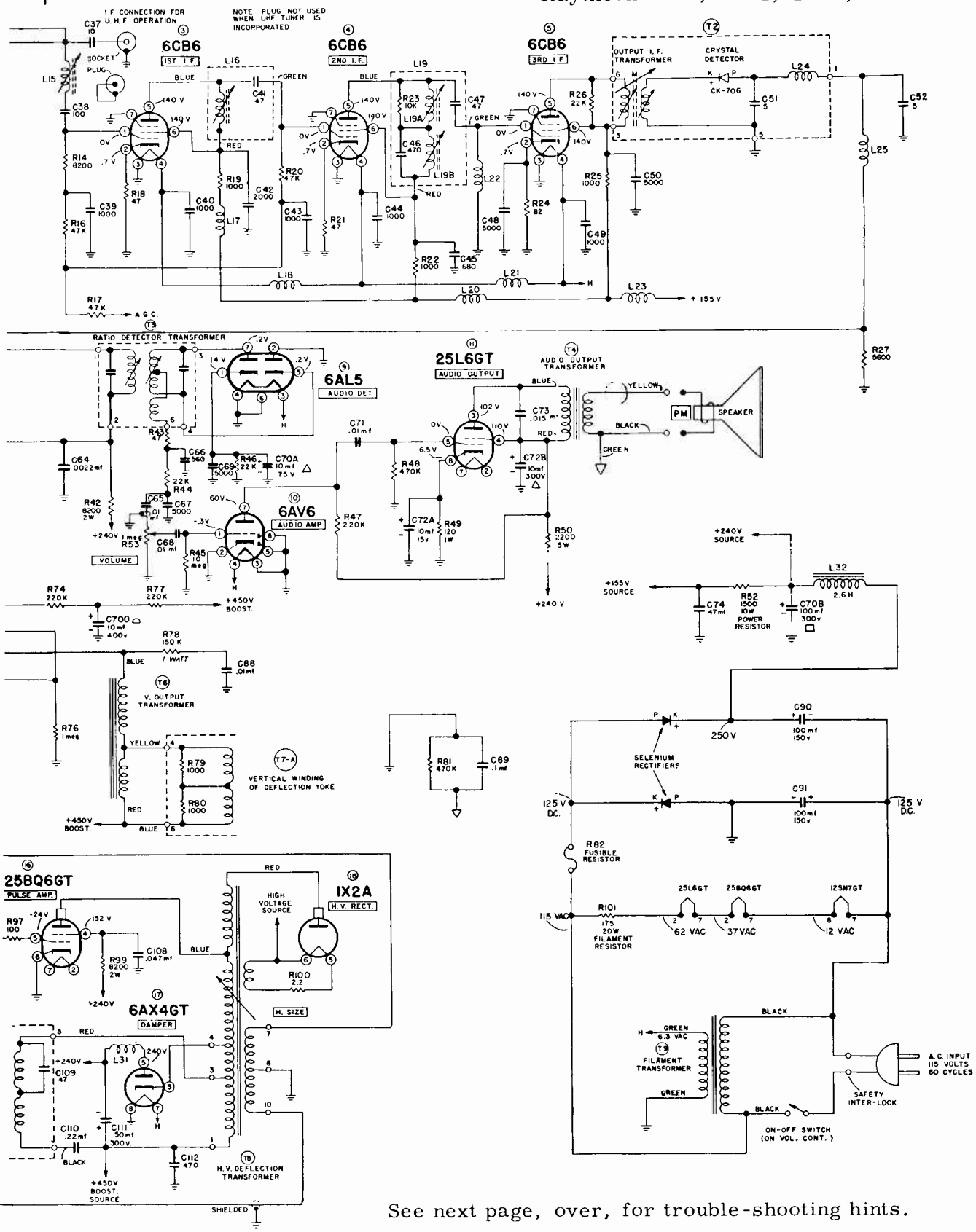

See next page, over, for trouble-shooting hints.

TROUBLE-SHOOTING

Raytheon 17T1, 17T2, 21T1, 21T2, continued.

Trouble	Probable Location
No Raster No Sound	1. Defective tubes 11-13-16. 2. Defective selenium rectifier. 3. Defective resistors R52-82-101. 4. Defective capacitors C70-72-74-90-91. 5. Defective transformer T9 or choke L32. 6. Defective safety interlock or on-off switch.
No Raster Sound Normal	1. Insufficient or no high voltage, (refer to "No High Voltage" section). 2. Defective picture tube. 3. Second anode lead disconnected. 4. Ion trap magnet misadjusted. 5. Defective C.R.T. socket.
No High Voltage	1. Defective tubes 15-16-17-18. 2. Defective transformer T8, yoke T7 or coil L30-31. 3. Defective capacitor C105-106-107-108-110-111-112. 4. Defective resistor R92-96-97-98-99-100.
No Picture No Sound Raster Normal	1. Defective antenna or lead-in. 2. Defective tuner tube 1-2. 3. Defective tuner (refer to page 12). 4. Defective tubes 3-4-5-6. 5. Improper voltages or resistances at sockets of tubes 3-4-5-6. 6. Improper alignment. 7. Defective crystal detector. 8. UHF power plug not in place.
No Sound Picture Normal	1. Defective tubes 8-9-10-11. 2. Improper voltages or resistances at socket of tube 8-9-10-11. 3. Defective speaker or leads broken or not in place. 4. Defective transformer T3-4 or coil L29. 5. Improper sound alignment.
No Sync	1. Defective tube 12. 2. Improper voltages or resistances at socket of tube 12. 3. Defective F-S-L switch or in wrong position. 4. Sync stabilizer adjust control misadjusted.
Insufficient or no Vertical Sweep	1. Defective tube 13. 2. Defective transformer T5-6 or yoke T7. 3. Defective capacitor C70-85-86-87. 4. Defective resistor R68-73-74-75-76-77.
Picture Cannot be Centered	1. Defective picture tube. 2. Defective centering magnet. 3. Defective ion trap magnet.
Poor Focus	1. Improper adjustment of Ion trap. 2. Defective picture tube.
Poor Horizontal Linearity	1. Improper adjustment of linearity magnet (17") or anti-pin cushion magnets (21"). 2. Defective tube 16-17. 3. Defective capacitor C105-106-111. 4. Defective transformer T8 or coil L31.
Snow or Poor Picture	1. Insufficient signal input. 2. Defective antenna or lead-in. 3. Improper alignment of C1-A-B. 4. Weak tubes 1-2-3-4-5. 5. Improper video IF alignment.
Lack of Contrast	1. Defective tube 6. 2. Defective crystal detector. 3. Improper video IF alignment.
Washed Out or Picture Smear	1. F-S-L switch in wrong position. 2. Defective crystal detector. 3. Gassy tube 1-3-4. 4. Improper video IF alignment.

SERVICE HINTS

A.G.C.

The A.G.C. is a negative bias voltage proportional to the average composite video signal, developed by the network of R-59 and C-78 and applied to the R F and first and second I F amplifiers. The magnitude of the A.G.C. voltage will vary according to the strength of the signal being received. However, it will closely correspond to the detector output voltage (across R-27). As a fast and simple check to determine whether the A.G.C. voltage is normal, measure both the A.G.C. and detector output voltage. Under normal operating conditions these two voltages will be approximately the same.

Sync Stability:

For optimum sync stability the following points should be considered. A three position F-S-L switch and a sync stabilizer adjust control are provided along with the two hold controls. The position of the switch is governed by the strength of the signal being received and the control should be adjusted for a steady picture. The position of the switch and the adjustment of the control are important for good sync stability (control will not function in "local" switch position).

For good horizontal sync stability both the horizontal hold thumb screw and coil core should be set to the center of their respective ranges. (Center position before going out of sync in either direction).

For good vertical sync stability the vertical hold control can be adjusted to reduce the effect of noise that may interrupt synchronization in reception areas where noise conditions exist.

Sentinel

Sentinel Radio Corporation
Models 1U-458, 1U-459, 1U-460, 1U-461

(Presented on the next 6 pages).

ALIGNMENT DATA

Generally under normal conditions only the INDIVIDUAL CHANNEL TRIMMERS in the tuner unit may require adjustment by the service technician.

RATIO DETECTOR AND SOUND I-F ALIGNMENT

In most cases only the secondary of the ratio detector coil will require adjustment. This can be done simply by adjusting the top adjustment screw of the ratio detector for minimum buzz with the sound carrier of a TV station. For complete alignment use steps 1, 2, and 3 in the alignment table.

PICTURE I-F ALIGNMENT

Receiver should be run for at least ½ hour before proceeding with alignment.

Use just enough signal output voltages at all stages of alignment to prevent distortion and overload. Maintain readings on low volt scale.

EQUIPMENT REQUIRED

VACUUM TUBE VOLTMETER

SIGNAL GENERATOR supplying a 4.5 MC. (within .25%) 20 to 30 MC. and 50 to 216 MC. (within 1%) signal. With output adjustable to at least .1 volt maximum.

CATHODE-RAY OSCILLOSCOPE. Must have good frequency and phase response from 10 cycles to at least 2 MC.

SWEEP GENERATOR. Capable of covering 20 to 30 MC. and 40 to 270 MC. with a 10 MC. sweep with output adjustable to at least .1 volt maximum.

7½ Volt Battery to provide 6 Volts fixed bias during video I-F alignment.

3 Volt "A" Battery to provide fixed bias during RF and RF oscillator alignment.

ALIGNMENT TABLE

RATIO DETECTOR AND SOUND ALIGNMENT

Step No.	Connect Signal Generator to	Sig. Gen. Freq.	Connect Voltmeter to	Miscellaneous Instructions	Adjust
1	In series with .001 MFD. cond. to junction of R-21 and C-25. See Fig. 5.	4.5 MC.	In series with 47,000 ohm resistor across C-45 a 10 MFD. Cond. See fig. 5.	Remove the 6AU6 tube 4th video I.F. Maintain reading on low volt scale.	T-7 (top), T-8 (top and bottom), T-9 (bottom) for maximum reading. See fig. 4 & 5.
2	In series with .001 MFD. cond. to junction of R-21 and C-25. See Fig. 5.	4.5 MC.	In series with 47,000 ohm resistor to junction of C-29 and C-31. See fig. 5.	Remove the 6AU6 tube 4th video I.F. Maintain reading on low volt scale.	T-9 (top) for zero reading. See fig. 4.
3	In series with .001 MFD. cond. to junction of R-21 and C-25. See Fig. 5.	4.5 MC.	In series with R.F. probe to junction of R-62 and R-128. See fig. 5.	Remove the 6AU6 tube 4th video I.F. Maintain reading on low volt scale.	T-12 (top) for minimum reading. See fig. 4.
4	Ungrounded converter tube (6J6) shield.	26.4 MC.	In series with 47,000 ohm resistor to junction of R-21 and C-25. See fig. 5.	Tuner on channel 3. No external bias	T-4 (bottom) for minimum reading. See fig. 5.
5	Ungrounded converter tube (6J6) shield.	20.4 MC.	In series with 47,000 ohm resistor to junction of R-21 and C-25. See fig. 5.	Tuner on channel 3. No external bias	T-3 (bottom), T-5 (bottom) for minimum reading. See fig. 5.
6	Ungrounded converter tube (6J6) shield.	21.9 MC.	In series with 47,000 ohm resistor to junction of R-21 and C-25. See fig. 5.	Tuner on channel 3. No external bias	T-11 (top) for minimum reading. See fig. 4.
7	Ungrounded converter tube (6J6) shield.	25.2 MC.	In series with 47,000 ohm resistor to junction of R-21 and C-25. See fig. 5.	Tuner on channel 3. 6 volt bias to junction of R-59 and C-53. Positive side to ground. See fig. 5.	T-6 (top) for maximum reading. See fig. 4.
8	Ungrounded converter tube (6J6) shield.	23.5 MC.	In series with 47,000 ohm resistor to junction of R-21 and C-25. See fig. 5.	Tuner on channel 3. 6 volt bias to junction of R-59 and C-53. Positive side to ground. See fig. 5.	T-5 (top) for maximum reading. See fig. 4.
9	Ungrounded converter tube (6J6) shield.	25.9 MC.	In series with 47,000 ohm resistor to junction of R-21 and C-25. See fig. 5.	Tuner on channel 3. 6 volt bias to junction of R-59 and C-53. Positive side to ground. See fig. 5.	T-4 (top) for maximum reading. See fig. 4.
10	Ungrounded converter tube (6J6) shield.	22.8 MC.	In series with 47,000 ohm resistor to junction of R-21 and C-25. See fig. 5.	Tuner on channel 3. 6 volt bias to junction of R-59 and C-53. Positive side to ground. See fig. 5.	T-3 (top) for maximum reading. See fig. 4.

NOTE 1: ALTERNATE 4.5 M.C. TRAP adjustment: Adjust T-12 (top) for minimum 4.5 M.C. beat on a strong station signal.
NOTE 2: For minimum buzz always adjust T-9 (top) with the sound carrier of a TV station.

SENTINEL Models 1U-458, 1U-459, 1U-460, 1U-461, continued.

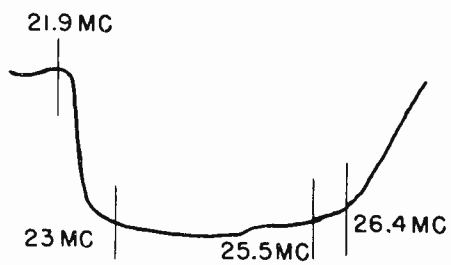

FIG. 2
RESPONSE CURVE FOR T-1 & T-2

ALIGNMENT TABLE—(Cont.)

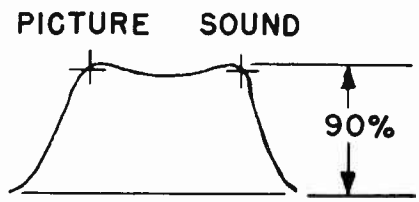

FIG. 3
RESPONSE CURVE FOR R.F. ALIGNMENT IN TUNER

Step No.	Connect Marker Generator to	Marker Gen. Freq.	Connect Sweep Gen. to	Sweep Freq.	Connect Oscilloscope to	Miscellaneous Instructions	Adjust
11	Couple to ungrounded converter tube shield.	26.4 MC. and 23.0 MC.	Direct to ungrounded converter tube shield.	20 to 30 MC.	In series with 47,000 ohm res. to junction of R-21 and C-25. See fig. 5.	Shunt 470 ohm resistors across primaries of T-3, T-4, T-5, T-6 (plate & screen).	T-1 and T-2 to correspond with response curve. See fig. 2.

NOTE 3: Steps 4 thru 10 should be repeated if any adjustments require more than ½ turn in either direction.

NOTE 4: T-1 primary and T-2 SECONDARY part of a double tuned circuit cannot be aligned to a set frequency, therefore, must be aligned to obtain the response curve shown in figure 2.

NOTE 5: T-1 affects the high side of response curve.
T-2 affects the low side of response curve.

TUNER R.F. ALIGNMENT

NEVER ADJUST C-1, C-7 and C-8 UNLESS ABSOLUTELY NECESSARY. THEY ARE FACTORY PRESET BY SPECIAL EQUIPMENT.

Step No.	Connect Marker Generator to	Marker Gen. Freq.	Connect Sweep Gen. to	Sweep Gen. Chan.	Connect Oscilloscope to	Miscellaneous Connections	Adjust
12	Loosely couple to sweep gen. leads.	205.25 MC. and 209.75 MC.	300 ohm antenna terminals.	12	Lead extending from top of tuner. See fig. 4	Tuner on channel 12 3 volt bias to center terminal of AGC level control.	C-1, C-7 and C-8 for max. response having linear peaks with picture and sound markers at 90% maximum response. See fig. 3
13	OBSERVE RESPONSE CURVE FOR ALL CHANNELS USING CORRECT FREQUENCIES AND CHANNELS. A SLIGHT COMPROMISE SHOULD BE MADE WITH C-1, C-7 AND C-8 IF MARKERS ARE BELOW 70%.						

FOR RF OSCILLATOR ALIGNMENT. SET FINE TUNING CONTROL IN CENTER POSITION. ADJUST INDIVIDUAL CHANNEL TRIMMERS FOR BEST PICTURE DETAIL WITH THE PATTERNS OF A TV STATION. NOTE: USE AN INSULATED SCREWDRIVER.

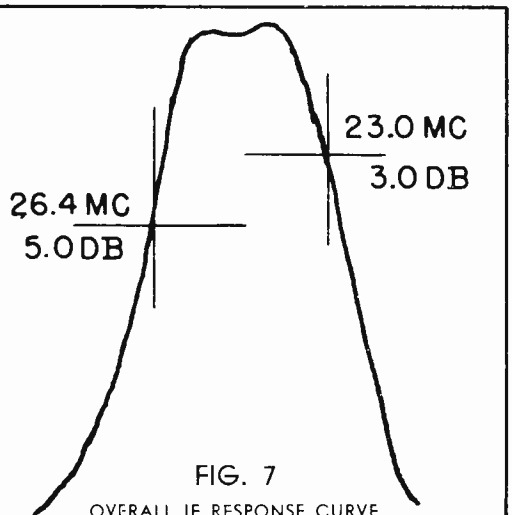

FIG. 7
OVERALL IF RESPONSE CURVE.

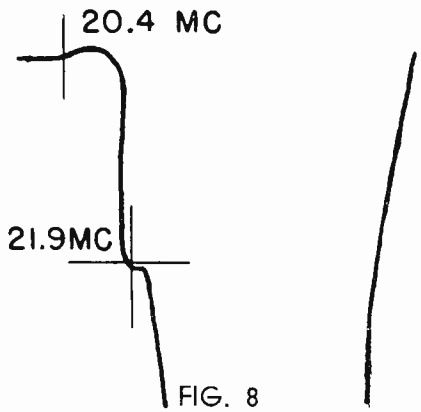

FIG. 8
EXPLODED VIEW OF 21-9, AND 20-4 MC TRAP MARKERS

SENTINEL Models 1U-458, 1U-459, 1U-460, 1U-461, continued.

TRIMMER LOCATION AND ALIGNMENT CONNECTION POINTS

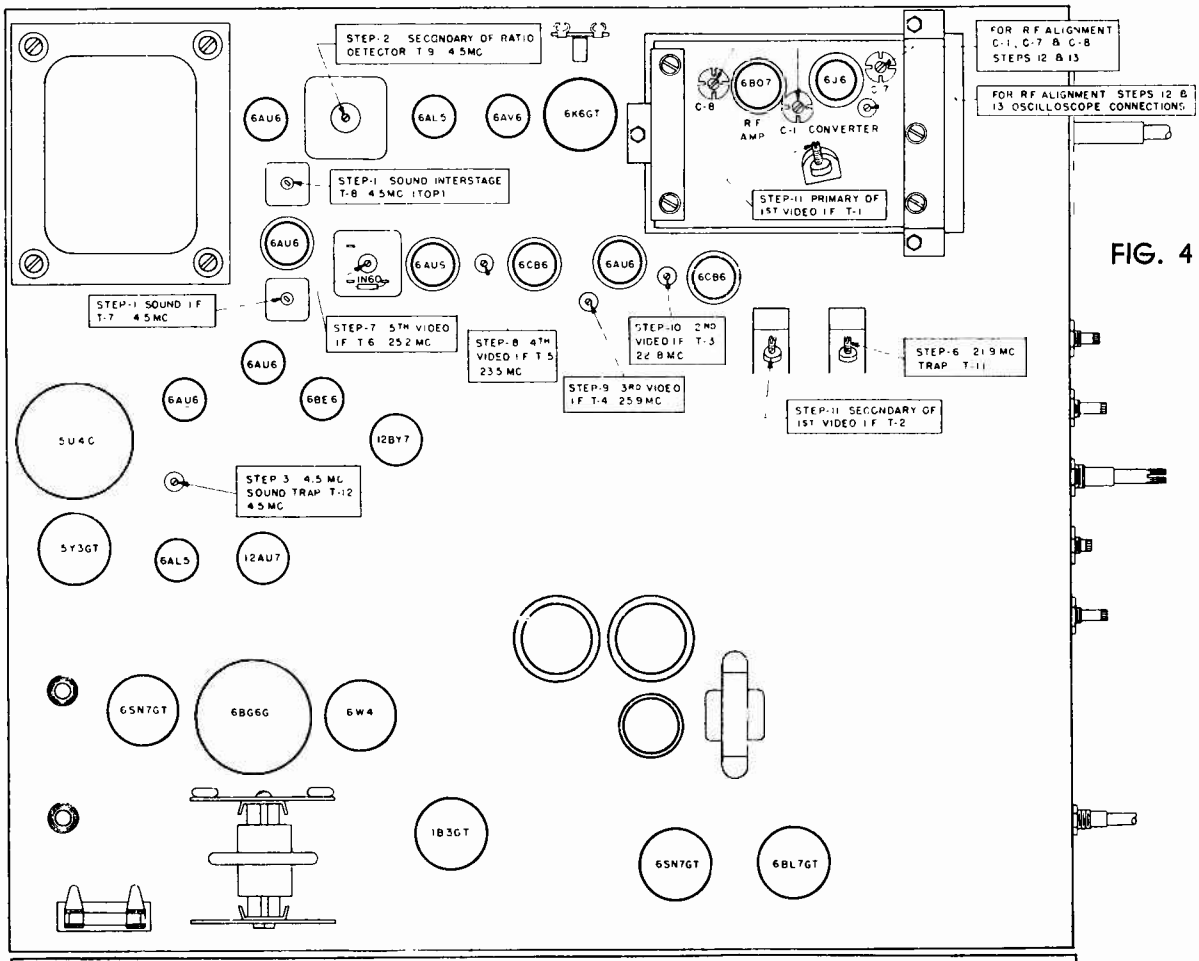

FIG. 4

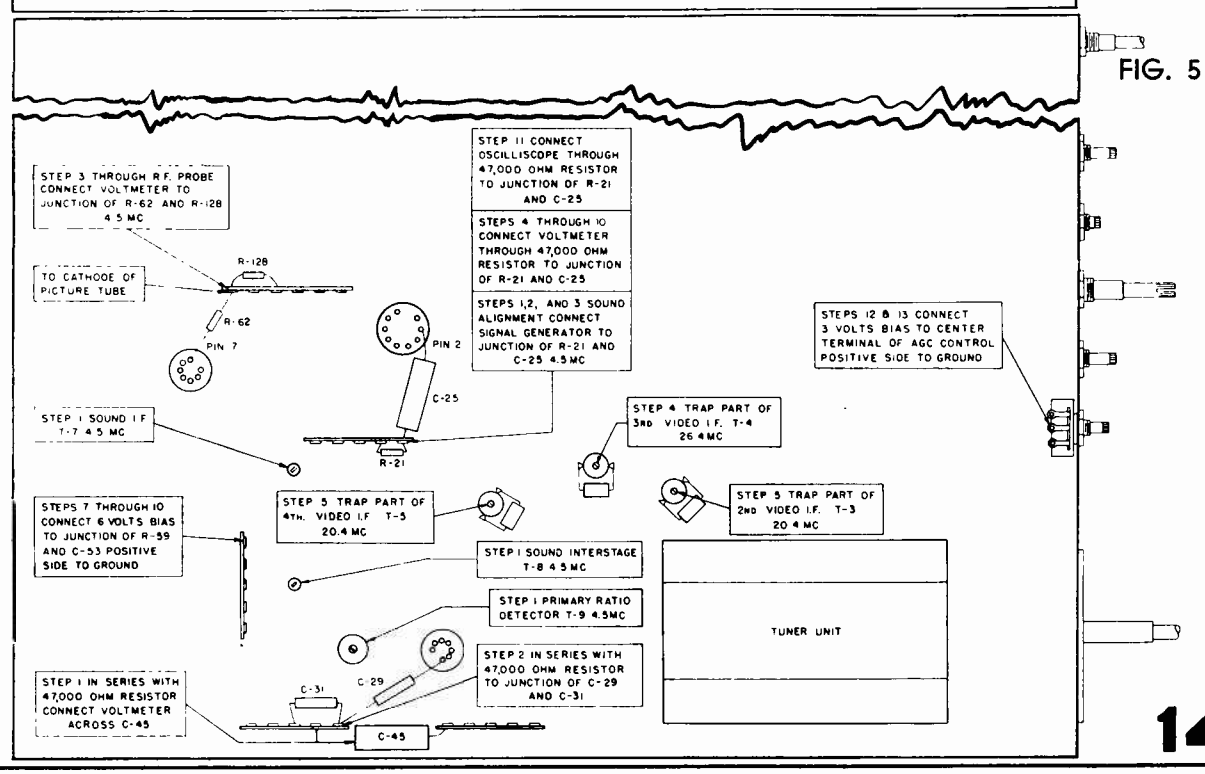

FIG. 5

SENTINEL Models 1U-458, 1U-459, 1U-460, 1U-461, Circuit Diagram

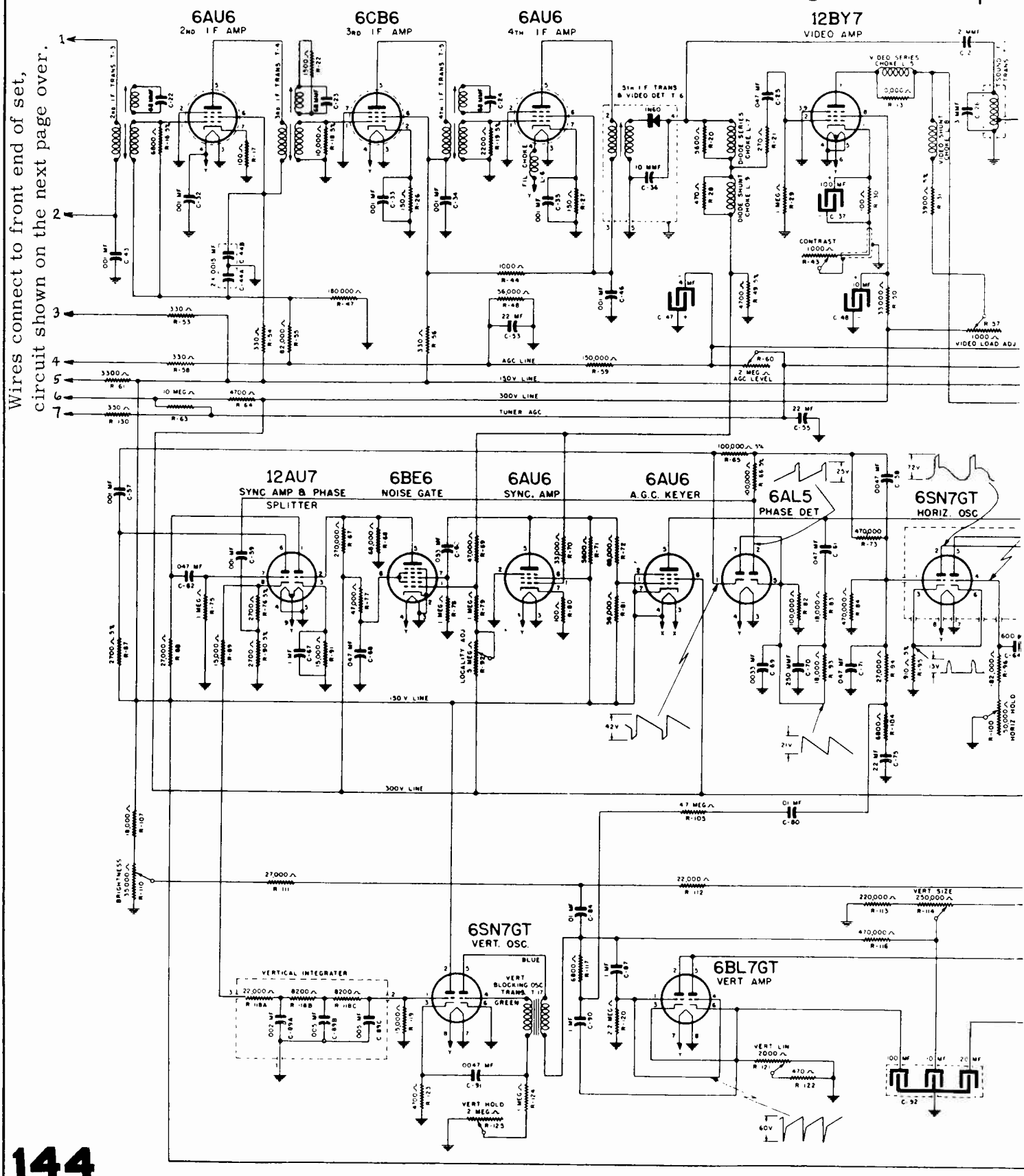

SENTINEL Models 1U-458, 1U-459, 1U-460, 1U-461, Circuit Diagram

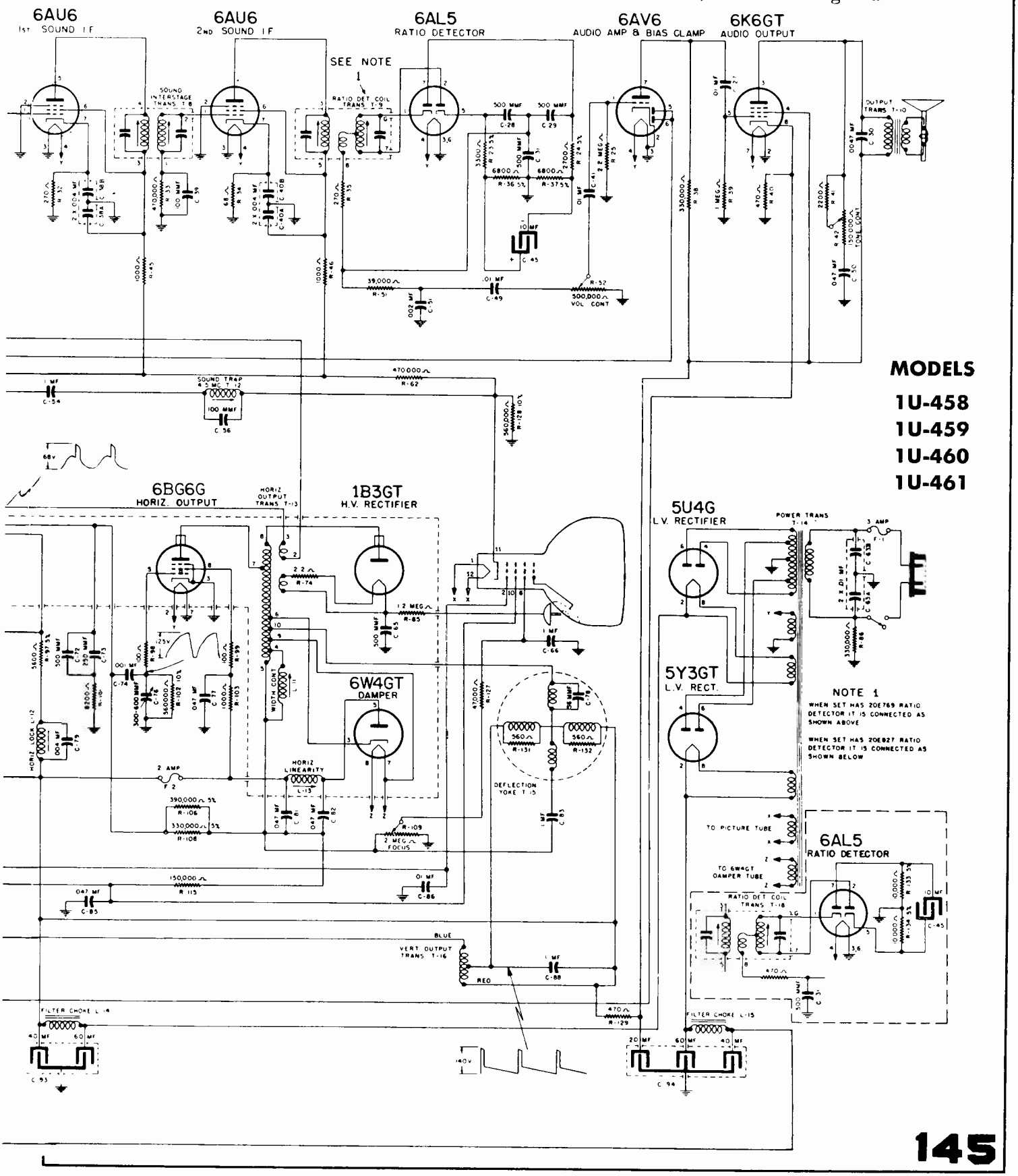

MODELS

1U-458
1U-459
1U-460
1U-461

SENTINEL Models 1U-458, 1U-459, 1U-460, 1U-461, continued.

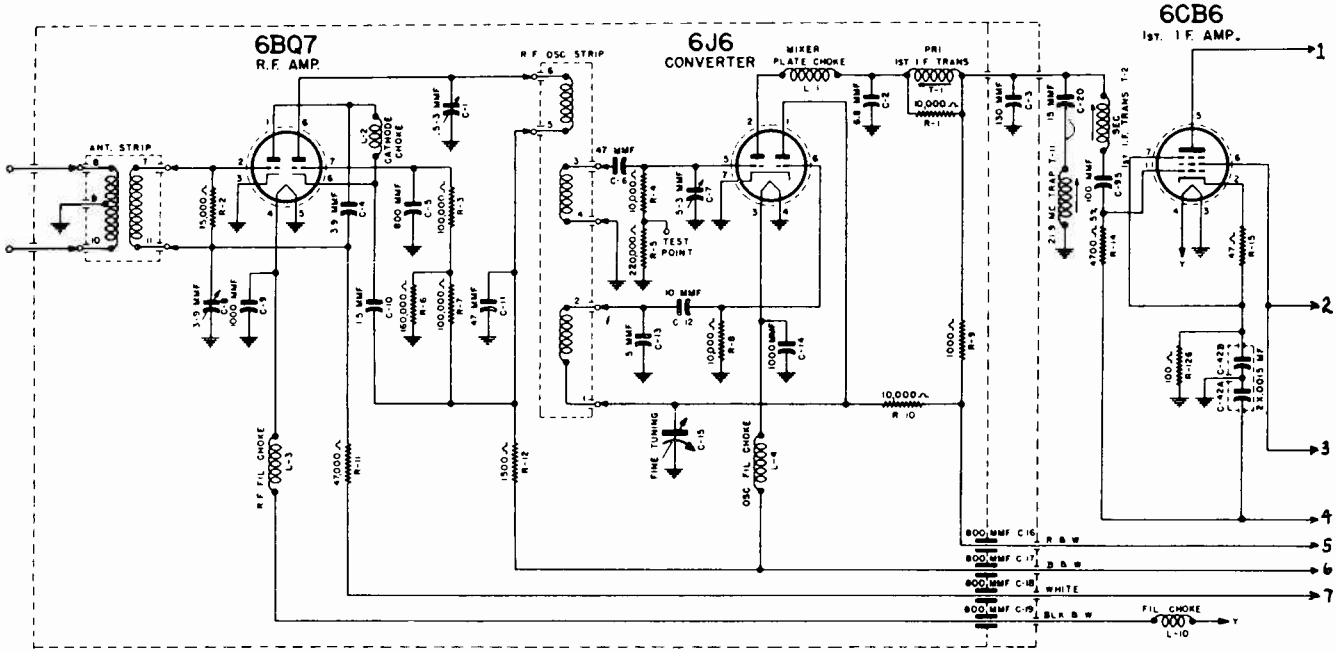

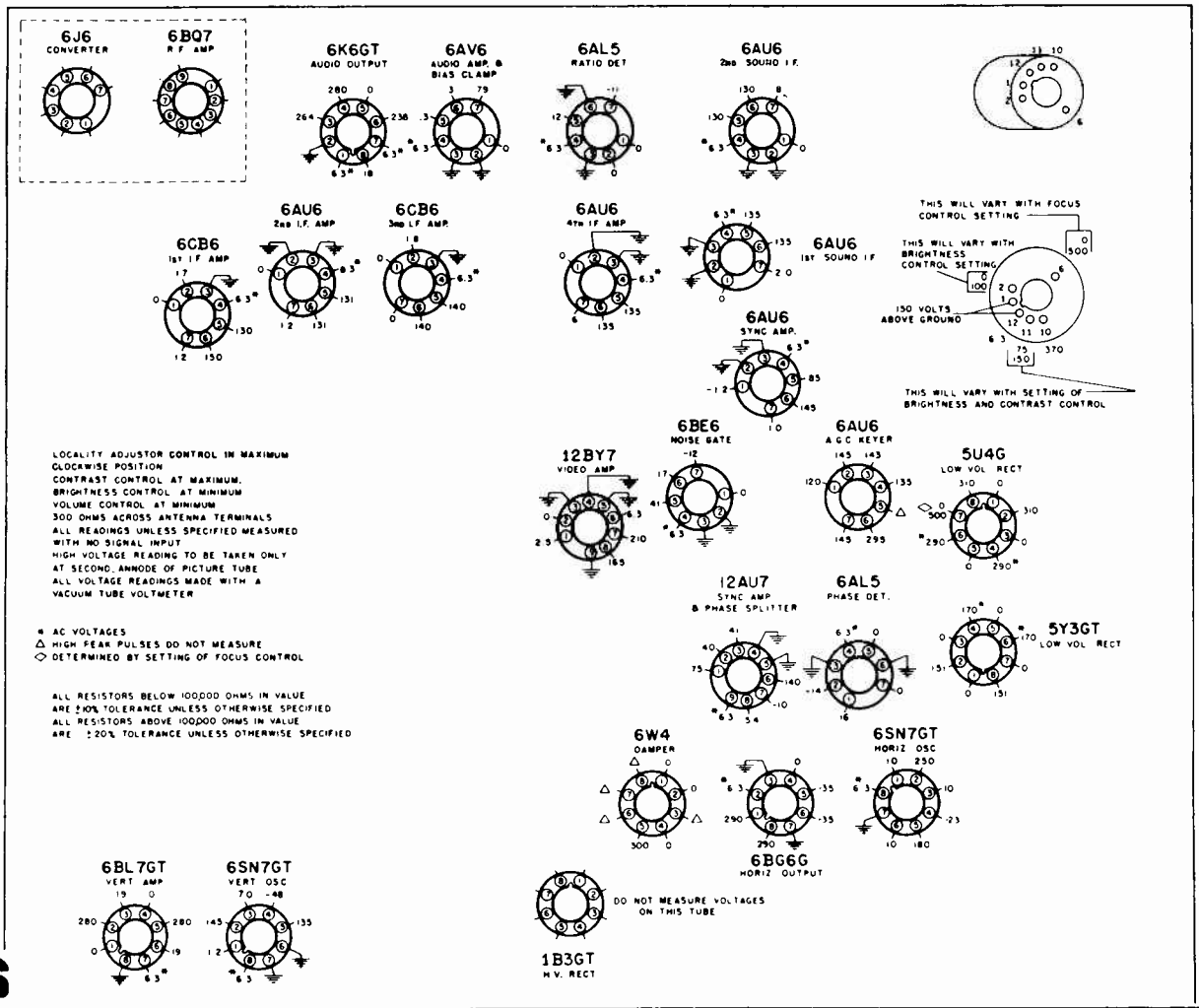

LOCALITY ADJUSTOR CONTROL IN MAXIMUM CLOCKWISE POSITION
CONTRAST CONTROL AT MAXIMUM.
BRIGHTNESS CONTROL AT MINIMUM
VOLUME CONTROL AT MINIMUM
300 OHMS ACROSS ANTENNA TERMINALS
ALL READINGS UNLESS SPECIFIED MEASURED WITH NO SIGNAL INPUT
HIGH VOLTAGE READING TO BE TAKEN ONLY AT SECOND ANNODE OF PICTURE TUBE
ALL VOLTAGE READINGS MADE WITH A VACUUM TUBE VOLTMETER

* AC VOLTAGES
△ HIGH PEAK PULSES DO NOT MEASURE
◇ DETERMINED BY SETTING OF FOCUS CONTROL

ALL RESISTORS BELOW 100,000 OHMS IN VALUE ARE ±10% TOLERANCE UNLESS OTHERWISE SPECIFIED
ALL RESISTORS ABOVE 100,000 OHMS IN VALUE ARE ±20% TOLERANCE UNLESS OTHERWISE SPECIFIED

Silvertone

Sears, Roebuck and Co.
Set No. 1175-21, using Chassis 478.380, and
Sets 1182-21 and 1189-21 with Chassis 478.381.

These models are 20 tube, AC operated, direct view, 21 inch rectangular metal picture tube television receivers. The chassis are electrically similar to those used for Catalog Nos. 163-16 (478.319 chassis), 153-16 (478.341 chassis), 1163-17 (478.375 chassis), and 1132-17 (478.376 chassis). The major differences consist of the use of a 21 inch rectangular metal picture tube (21AP4) and the Sarkes-Tarzian TT5 Tuner.

Circuit diagram on pages 148-149, additional service material on page 150.

TO REMOVE THE CHASSIS FROM THE CABINET:

1 — Remove the knobs on the front panel by pulling them straight forward, in line with the shafts on which they are mounted.
2 — Remove the screws holding the masonite back to the cabinet and remove the back.
3 — Loosen the screws holding the antenna terminal strip to the cabinet and slide out the antenna terminal strip.
4 — Reach into the cabinet from the rear and remove the speaker plug from the front of the chassis.
5 — Remove the six chassis mounting screws from the bottom of the cabinet.
6 — Slide the chassis straight out, being careful not to hit the picture tube.

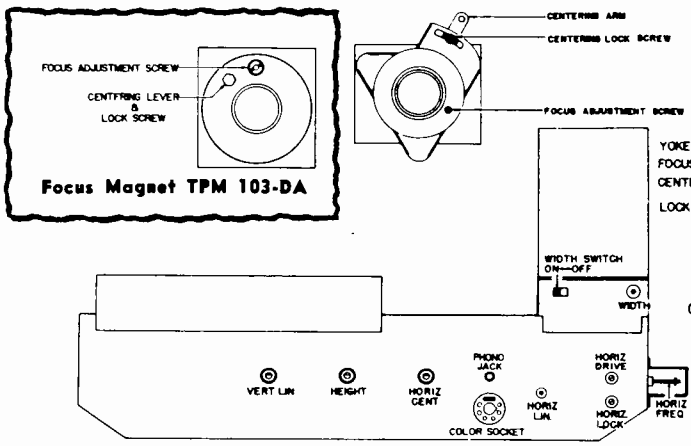

Focus Magnet TPM 103-DA

RECEIVER REAR CHASSIS CONTROLS

(Using Focus Magnet TPM 110-D)

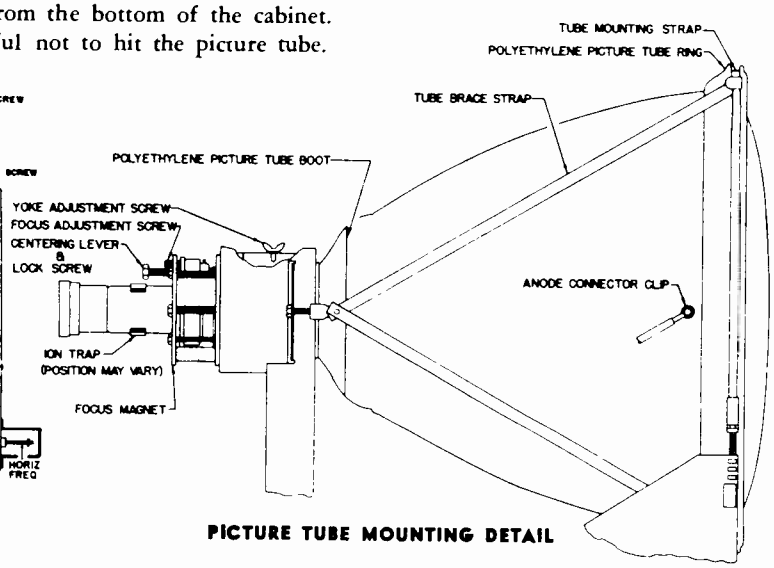

PICTURE TUBE MOUNTING DETAIL

VOLTAGE CHECK CHART

SCHEMATIC LOCATION	TUBE FUNCTION	TUBE	PIN NUMBERS 1	2	3	4	5	6	7	8	9
V 1	1st Vid. I.F.	6CB6	-.5	1	0	6.3 A.C.	110	110	0		
V 2	2nd Vid. I.F.	6CB6	-.5	1	0	6.3 A.C.	110	110	0		
V 3	3rd Vid. I.F.	6CB6	0	1.2	0	6.3 A.C.	110	110	0		
V 4	Vid.Detector & A.G.C.	6AL5	0	-.2	6.3 A.C.	0	1.2		-.5		
V 5	1st & 2nd Vid. Ampl.	12AU7	120*	-3.5	3.5*	6.3 A.C.	6.3 A.C.	160	-1*	.8	0
V 14	4.5 M.C. Ampl.	6AU6	0	0	0	6.3 A.C.	110	110	1.2		
V 15	Ratio Detector	6AL5	.4	-.4	1 A.C.	6.3 A.C.	0	0	0		
V 16	1st Audio Ampl.	6AT6	-0.9	0	0	6.3 A.C.	0	0	50		
V 17	Audio Output	6K6		0	120	130	-14		6.3 A.C.	0	
V 7	Sync. Separator	6SN7	-3.5	0	0	-15*	235	4	6.3 A.C.	0	
V 6	Sync. Limiter and Vertical Oscillator	6SR7	0	-45+	0	-15*	-15*	150++	6.3 A.C.	0	
V 8	Vertical Amplifier	6S4		-58		6.3 A.C.	0	-70		410	
V 9	Hor. Oscillator and Sync. Guide	6SN7	-100	35**	-125	180	110	-105	6.3 A.C.	0	
V 10	Hor. Output	6BG6		6.3 A.C.	-95		-110		0	190	
V 12	Damper	6W4			475		280		120	120	
V 13	Power Rectifier	5U4		300		-90		-90		300	

Conditions:
1. Switch on - set connected to 117 Volt 60 cycle AC.
2. No antenna connected and set tuned to unused channel.
3. All controls at "Normal Setting".
4. Measurements taken with a Vacuum tube Voltmeter.

Notes:
* Reading will vary with setting of Picture Control.
** Reading will vary with setting of Horizontal Hold Control.
\+ Reading will vary with setting of Vertical Hold Control.
++Reading will vary with setting of Height Control.

Sears, Roebuck and Co. Sets Catalog Numbers 1175-21, 1182-21, and 1189-21, Silvertone Chassis No. 478.380 and 478.381, Circuit Diagram.

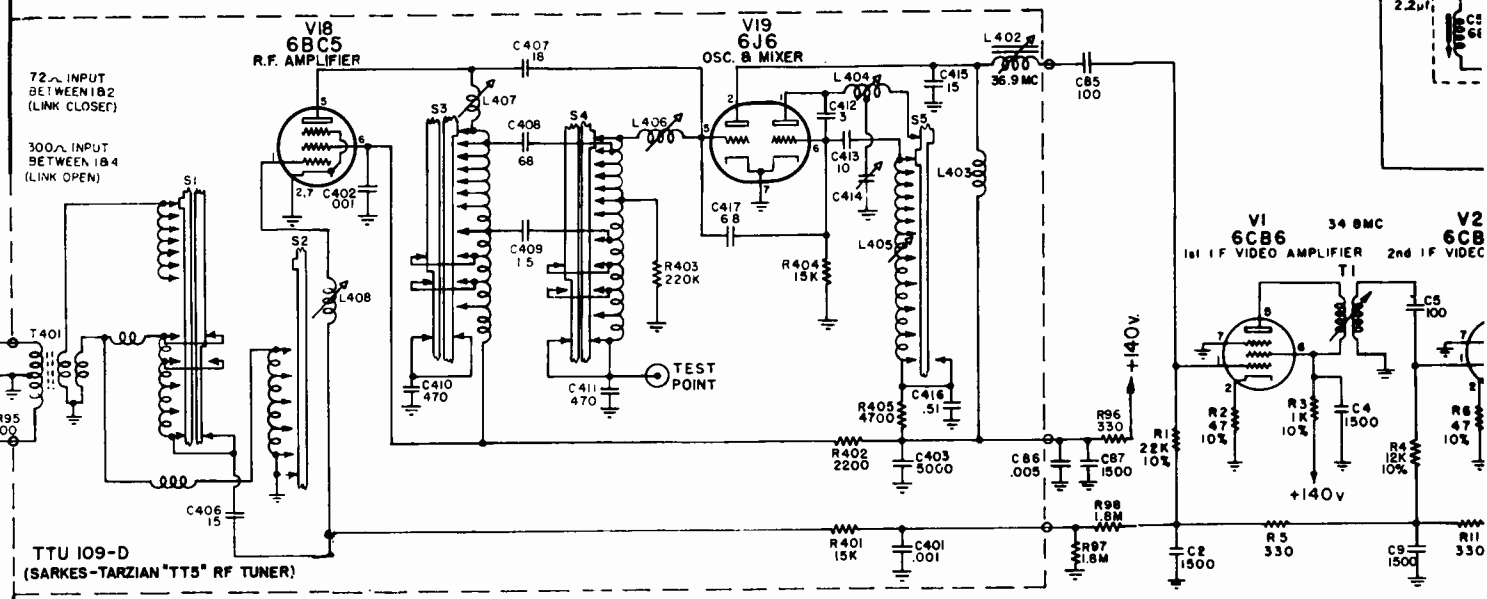

NOTES:

1. UNLESS OTHERWISE NOTED ALL CARBON RESISTORS ARE 1/2 WATT 20% & CONDENSER VALUES ARE IN μμf WITH 500V. RATINGS
2. Ⓜ = MOLDED PAPER, K = 1,000, M = 1,000,000
3. VOLTAGES MEASURED WITH A VACUUM TUBE VOLTMETER.
4. RESISTANCE READINGS OF WINDINGS ARE APPROXIMATE AND MAY VARY ±15%.
5. IN SOME RECEIVERS A 30 mh. DEFLECTION YOKE (TTR 224-D) MAY HAVE BEEN USED INSTEAD OF THE 8.3 mh. DEFLECTION YOKE (TTR 242-D). IN THESE RECEIVERS THE CHASSIS ARE DENOTED 478.380-1 OR 478.381-1, AND THE HORIZONTAL DEFLECTION CIRCUIT WILL BE AS FOLLOWS:

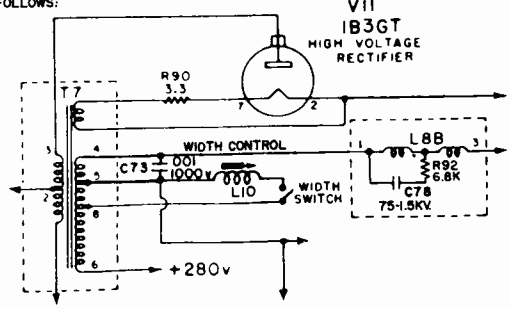

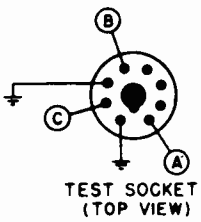

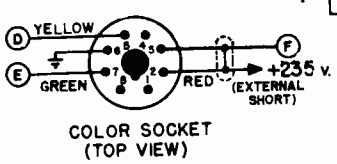

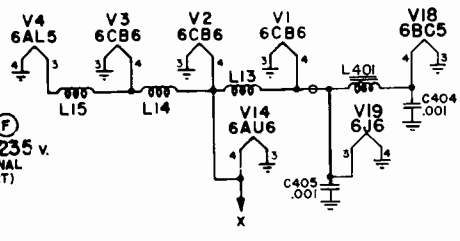

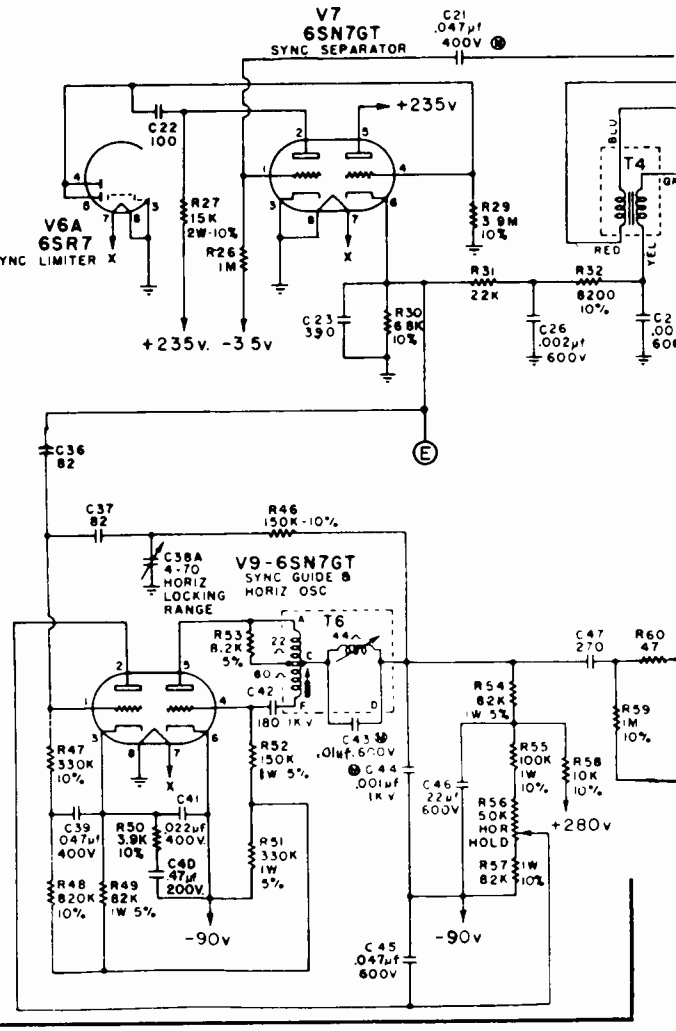

478.380 and 478.381 CHASSIS

1953 TELEVISION

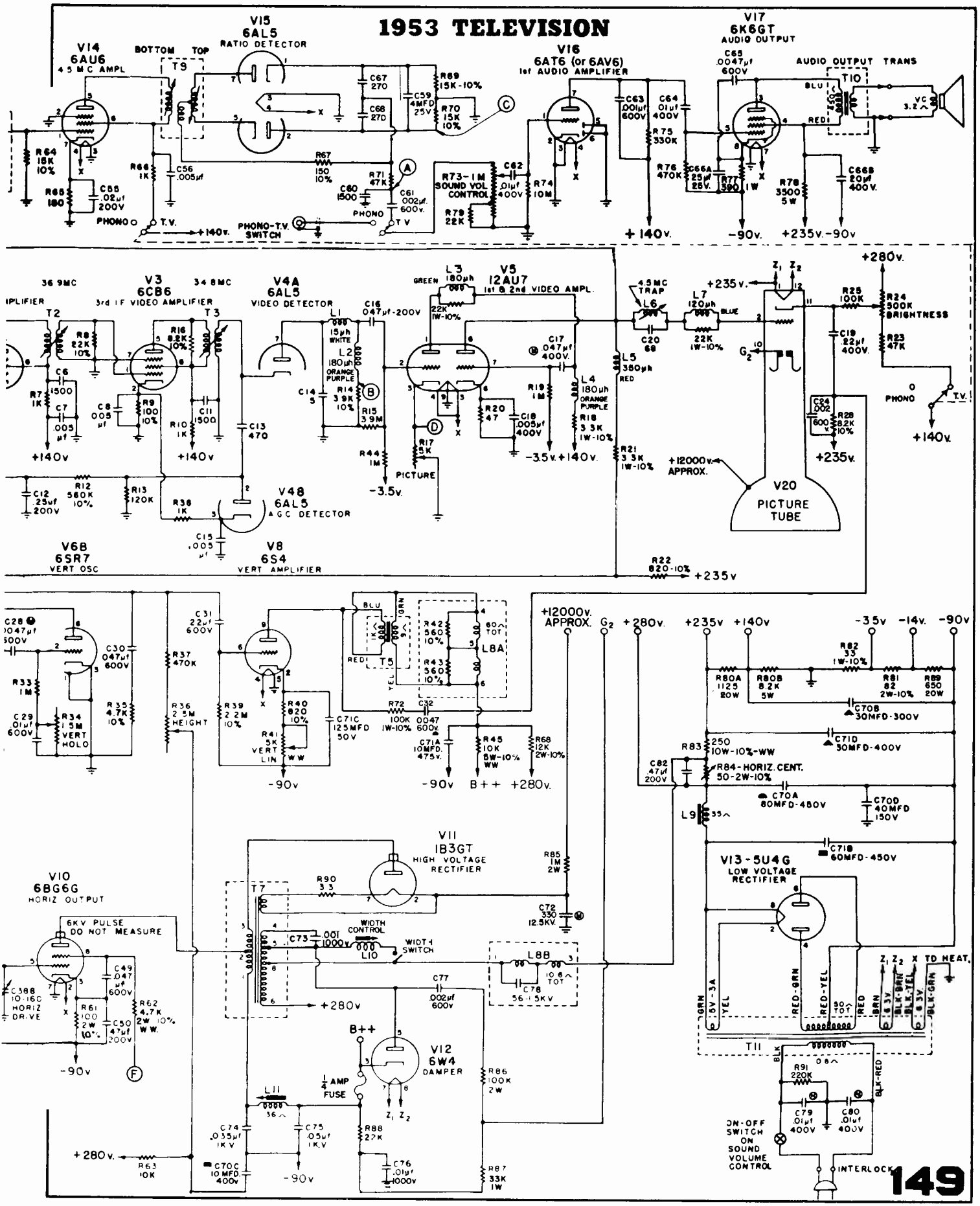

Sears, Roebuck and Co., Silvertone Chassis 478.380 and 478.381, continued.

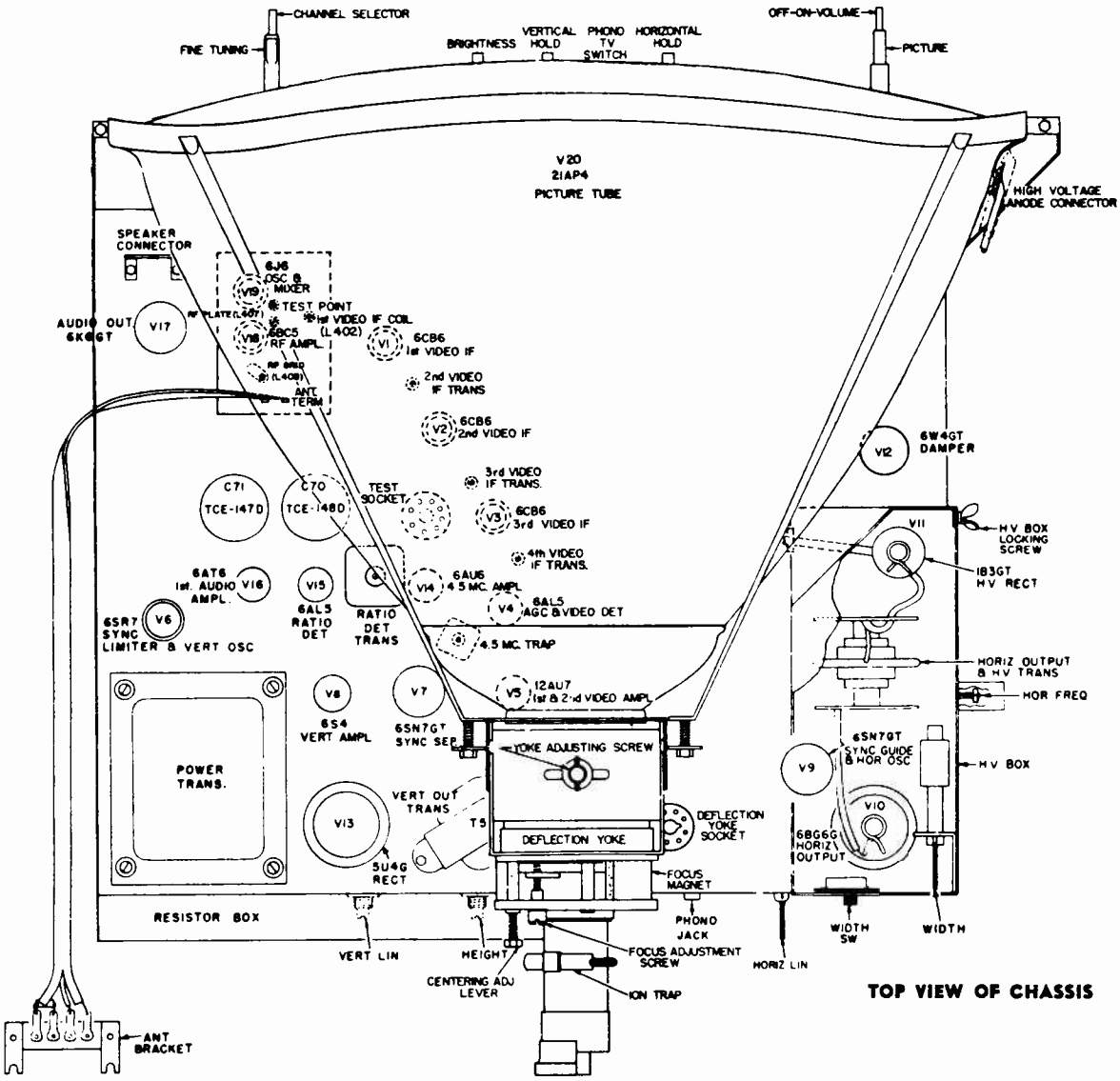

TOP VIEW OF CHASSIS

RESISTANCE CHECK CHART

SCHEMATIC LOCATION	TUBE FUNCTION	TUBE	PIN NUMBERS								
			1	2	3	4	5	6	7	8	9
V 1	1st Vid. I.F.	6CB6	700K	47	0	Fil.	10K	10K	0		
V 2	2nd Vid. I.F.	6CB6	700K	47	0	Fil.	10K	10K	0		
V 3	3rd Vid. I.F.	6CB6	0	100	0	Fil.	10K	10K	0		
V 4	Vid.Detector & A.G.C.	6AL5	0	120K	Fil.	0	1.1K		3.9K		
V 5	1st & 2nd Vid. Ampl.	12AU7	12K	1 Meg	5K	Fil.	Fil.	13K	1 Meg	47	0
V 14	4.5 M.C. Ampl.	6AU6	1.5	0	0	Fil.	10K	10K	180		
V 15	Ratio Detector	6AL5	15K	15K	0	Fil.	Inf.	0	Inf.		
V 16	1st Audio Ampl.	6AT6	10 Meg	0	0	Fil.	0	0	400K		
V 17	Audio Output	6K6		0	13K	13K	470K		Fil.	0	
V 7	Sync. Separator	6SN7	1.2 Meg	27K	0	5 Meg	10K	6.8K	Fil.	0	
V 6	Sync. Limiter and Vertical Oscillator	6SR7	0	1.8 Meg	0	4.7 Meg	4.7 Meg	600K	Fil.	0	
V 8	Vertical Amplifier	6S4		3K		Fil.	0	2.7 Meg			120K
V 9	Hor. Oscillator and Sync. Guide	6SN7	1.6 Meg	60K	450K	500K	100K	800	Fil.	0	
V 10	Horizontal Output	6BG6		Fil.	950		1 Meg		0	16K	
V 12	Damper	6W4			330K		10K		8K	8K	
V 13	Power Rectifier	5U4		10K		850		850		10K	

Conditions:
1. Readings may be taken with a VTVM type multimeter, a Simpson meter or any reliable resistance measuring device.
2. All controls at "Normal Setting."
3. Switch off-line cord disconnected.
4. All tubes left in sockets.

Note: Filament resistance too low to read.

SPARTON TELEVISION CHASSIS TYPE 27D213

THE SPARKS-WITHINGTON COMPANY - JACKSON, MICHIGAN

Models 5342A, 5343A, 5382A, 5383A, 5384A, 5385A, 5386A, 10352, and 10353.

ALIGNMENT PROCEDURE

SOUND TRAP ALIGNMENT: FIRST, Connect the R.F. Signal generator to the grid of V-2 by means of the I.F. Input adapter as shown in Figure 5.

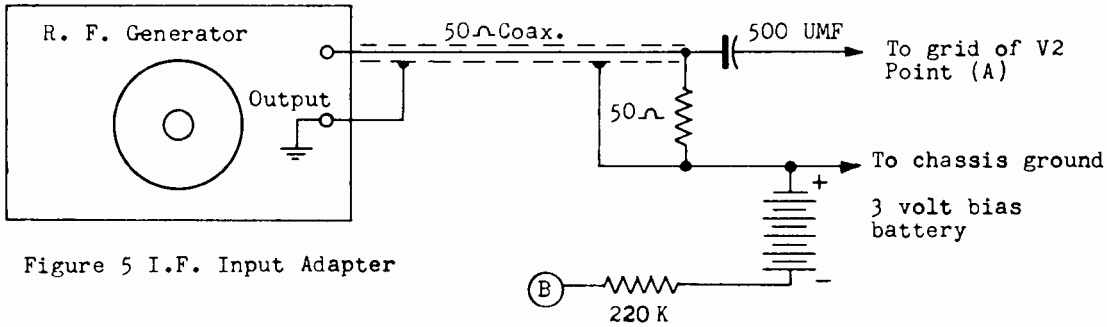

Figure 5 I.F. Input Adapter

SECOND: Set the R.F. tuner to Channel #13.

THIRD: Connect a 4.5 volt bias battery between the A.G.C. buss (Point G) and chassis ground so that the voltage on the A.G.C. buss is -4.5 volts in respect to the chassis. Remove AGC tube 6AU6 V8.

FOURTH: Connect the electronic voltmeter across the picture detector load resistor R41, Point C, and set the voltmeter on the low D.C. volt scale.

FIFTH: Set the R.F. signal generator to the frequency shown below and tune the specified adjustment for minimum indication on the voltmeter. It is advisable to check the output of the generator with the crystal calibrator to make certain that it is exactly on frequency.

27.75 Mc. L9 (Top of Chassis Fig. 3)
21.75 Mc. L10 (Top of Chassis as shown in Figure 3).

PICTURE I.F. ALIGNMENT: FIRST: Connect the R.F. Signal generator, voltmeter and bias battery to the receiver as described in Steps 1,2,3 and 4 of the sound trap alignment instructions.

SECOND: Set the signal generator to each of the following frequencies and peak the specified adjustments for maximum indication of the voltmeter.

22.5 Mc. L6 (Top of tuner as shown in Fig. 3)
25.25 Mc. L11 (Top of chassis as shown in Fig. 3)
24.25 Mc. L12 (Top of chassis as shown in Fig. 3)
23.25 Mc. L13 (Top of chassis as shown in Fig. 3)
26.0 Mc. L14 (Top of chassis as shown in Fig. 3)

SOUND I.F. ALIGNMENT FIRST: Connect the R.F. signal generator to Point C as shown on Schematic diagram.

SECOND: Set the signal generator accurately to 4.5 Mc. This is very important because the picture and sound carriers sent out from the television stations are exactly 4.5 Mc. apart.

THIRD: Connect the electronic voltmeter across R69 from Point E to ground. Set the voltmeter on the 10 volt scale, (-DC Volts).

FOURTH: Peak the following coils for maximum reading on the voltmeter.

L17 Top of chassis as shown in Fig. 3.
T1 Top of chassis as shown in Fig. 3 and bottom of chassis as shown in Fig. 4.
T2 (Pri. Ratio Det) Top of chassis as shown in Fig. 3.

Alignment information continued on page 154.

Sparton Television Chassis Type 27D213
(Service data continued)

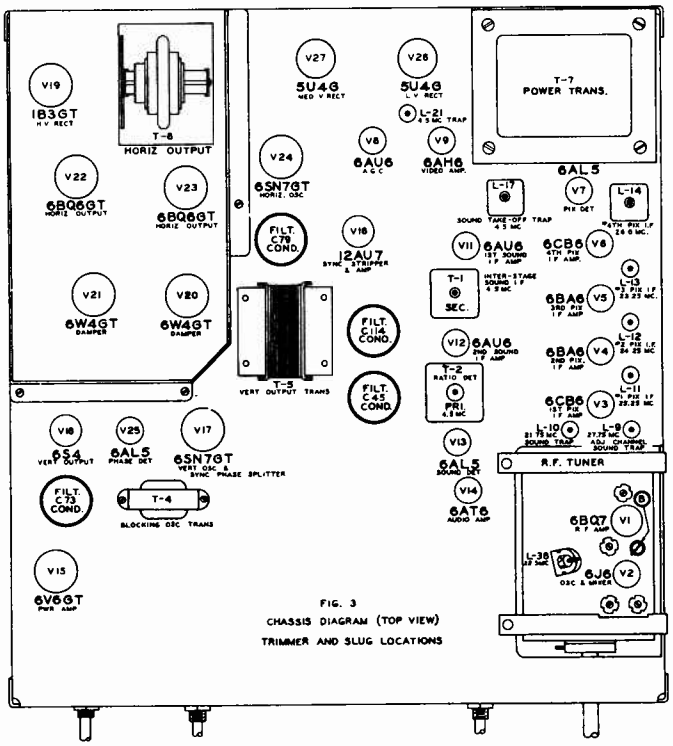

FIG. 3
CHASSIS DIAGRAM (TOP VIEW)
TRIMMER AND SLUG LOCATIONS

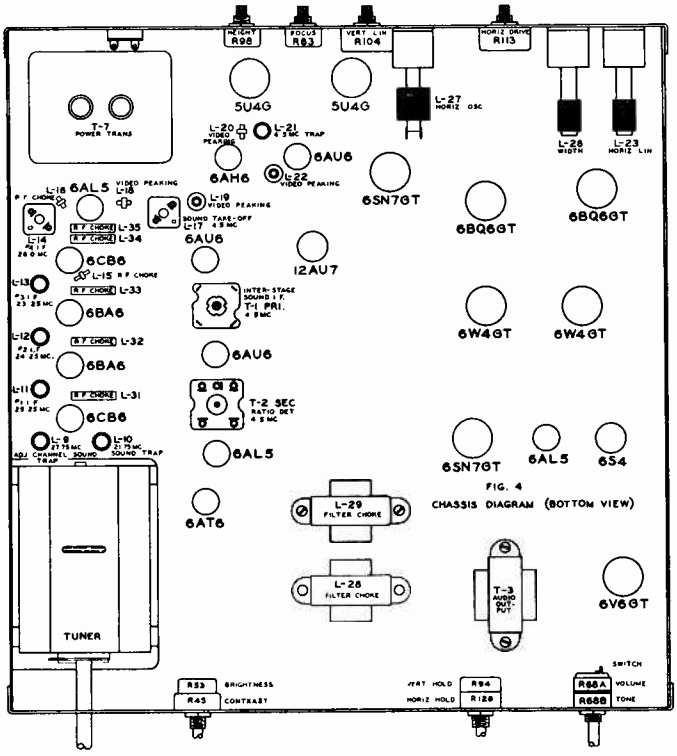

FIG. 4
CHASSIS DIAGRAM (BOTTOM VIEW)

SPARTON TELEVISION SCHEMATIC DIAGRAM
CHASSIS TYPE 27D213

MODELS 5342A, 5343A, 5382A, 5383A, 5384A, 5385A & 5386A
10352 & 10353

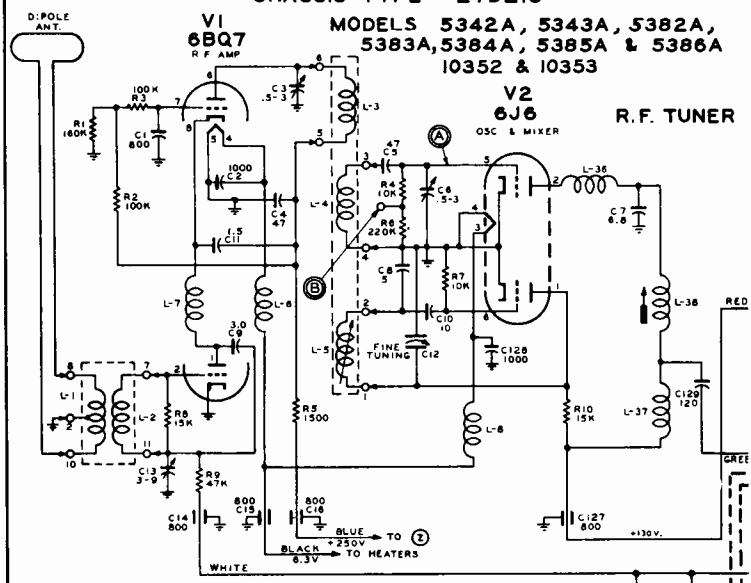

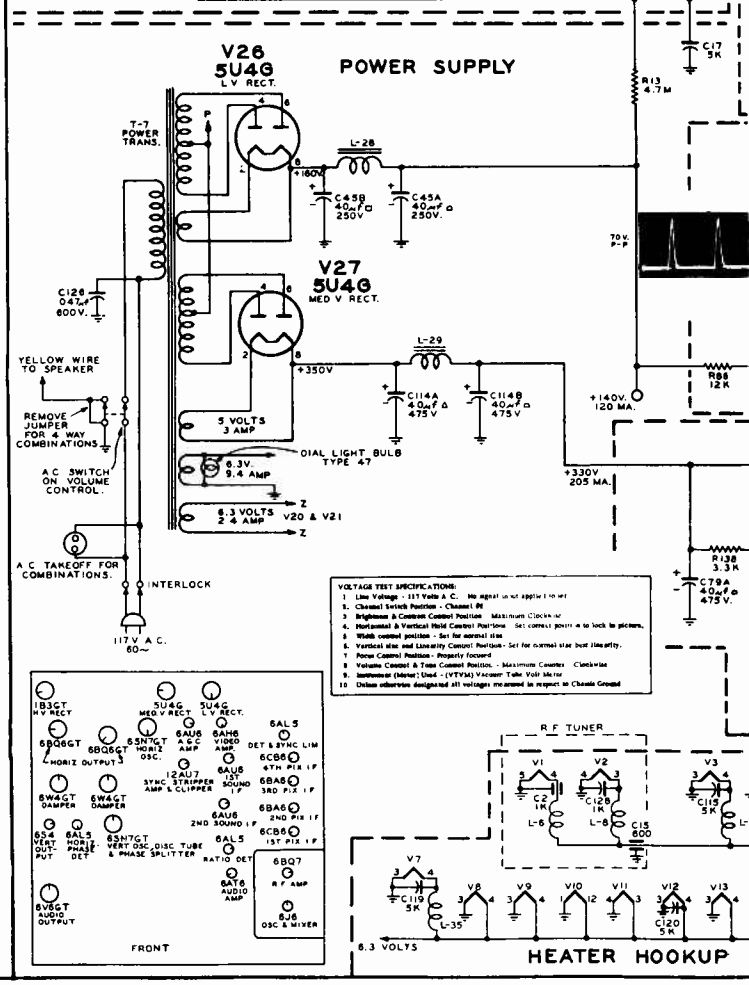

NOTE
The points indicated by the letters A, B, C, D, E, F & G are the alignment test points referred to in the alignment procedure

(A) Pin #5 of V2 (6J6) Osc & Mixer Tube
Apply signals here for spot I F Alignment or I F Sweep
(B) Apply minus 3 volts through 220K Ohms to test terminal, located between the tubes on top of R F Tuner (See Fig 3, suggested input adapter Fig 5)
(C) Diode Load Resistor
Read D C output here for spot I F Alignment
Connect scope here for visual I F Alignment
(D) Cathode of Picture Tube
Read A.C. output here for overall sensitivity
Read 4.5 Mc output here for aligning 4.5 Mc Trap
(E) Ratio Detector Output
Read D C here for alignment of sound take-off trap, inter-stage sound I.F trans and primary of ratio det trans.
(F) Ratio Detector Balanced Output
Read D C here for alignment of secondary of ratio det trans
(G) A.G.C. Line
Apply 4 5 volts bias here for visual check of I F or overall with oscilloscope.

ADJUSTMENT OF THE FOLLOWING CONTROLS WILL CHANGE VOLTAGES AT POINTS INDICATED:
1 Contrast Control Pin 1 of V8, Pin 5 of V9, Pin 11 of V10, Pin 2 of V16
2 Brightness Control - Pin 2 of V10
3 Focus Control Pin 6 of V10
4 Vertical Size Pin 5 of V17A
5 Horizontal Hold Control - Pin 1 of V24
6 Horizontal Drive Control - Pin 5 of V22 & V23, Pin 3 & 7 of V20 & V21

MOST-OFTEN-NEEDED 1953 TELEVISION SERVICING INFORMATION

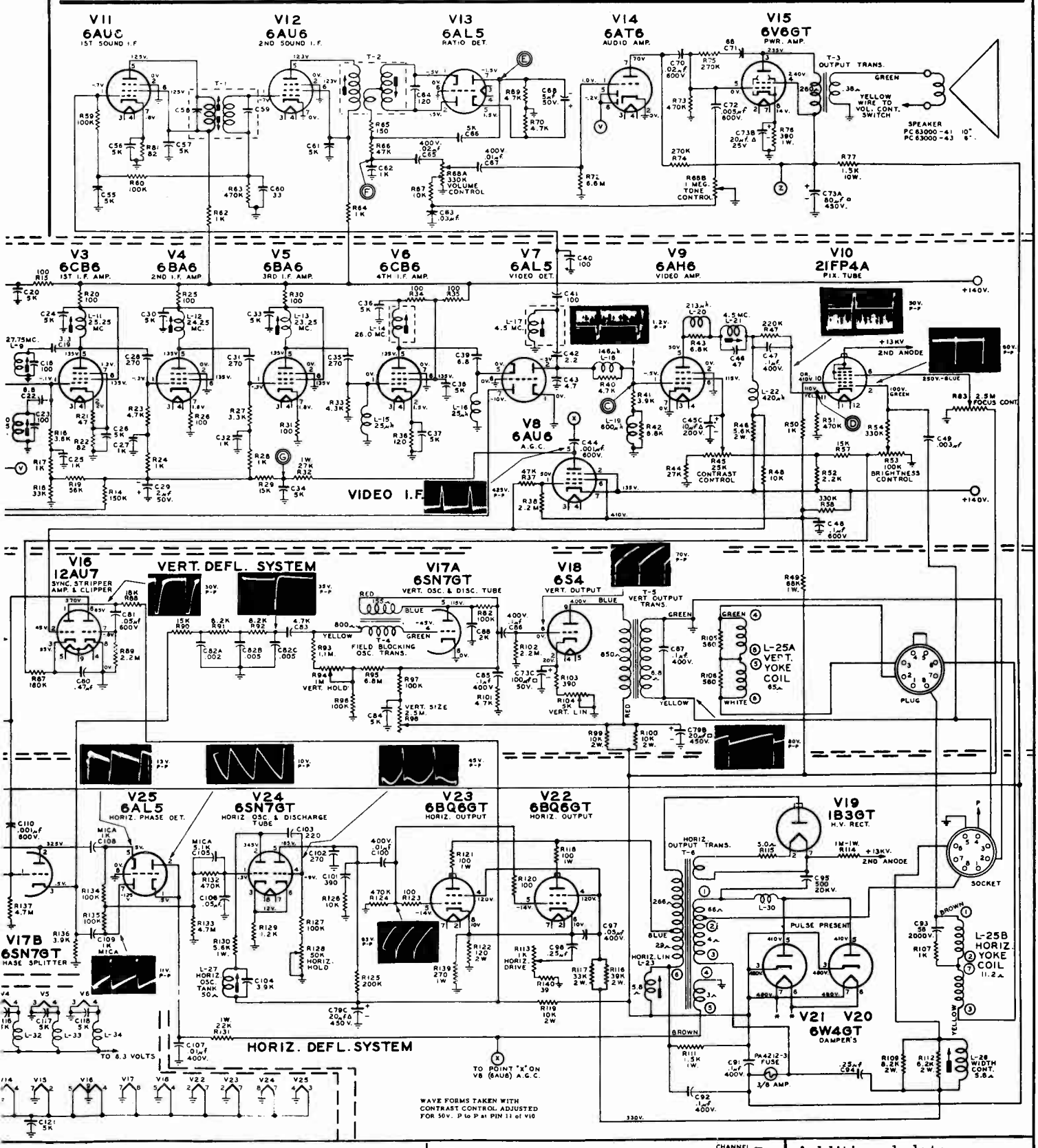

CHASSIS BACK VIEW

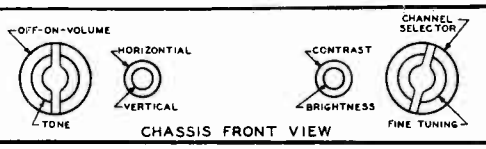

CHASSIS FRONT VIEW

Additional data on the next page.

SPARTON TELEVISION **CHASSIS TYPE** 27D213

ALIGNMENT PROCEDURE (CONT'D)

RATIO DETECTOR TRANSFORMER ALIGNMENT: FIRST: Connect the R.F. signal generator to the receiver as described in Step 1 of the sound I.F. alignment instructions.

SECOND: Connect the electronic voltmeter from Point F to ground. Set the voltmeter on the lowest DC scale.

THIRD: Set the signal generator output to 4.5 Mc. Adjust the secondary of T2 (Bottom view of chassis as shown in Fig. 4). Notice that it is possible to produce a positive or negative voltage indication on the meter by varying this adjustment. As the voltage swings from positive to negative, adjust T2 for zero output as indicated by the voltmeter. This point is called zero ratio detector output and indicates correct alignment of T2 transformer. If the secondary of T2 is found to be way out of alignment it will be necessary to re-peak the primary as described in the preceeding section on sound I.F. alignment.

4.5 MC. TRAP ALIGNMENT FIRST: Connect the R.F. signal generator as described in Step 1 of the sound I.F. alignment.

SECOND: Connect the electronic voltmeter from the cathode of the picture tube to ground (Point D). The voltmeter must be capable of giving a reading at 4.5 Mc. of approximately 1 to 2 volts.

THIRD: Peak L21 (Top of chassis as shown in Fig. 3) for minimum output on the voltmeter.

PICTURE I.F. TOUCH UP: Connect the R.F. sweep generator output to the grid of V-2 by means of the I.F. input adapter shown in Figure 5.

SECOND: Apply bias to A.G.C. line as described in Step 3 of sound trap alignment. Set R.F. selector to Channel #13.

THIRD: Connect the oscilloscope to the picture detector load resistor R41 (Point C) by means of the shielded cable and the filter system shown in Figure 6.

FOURTH: Set the R.F. sweep generator so that it sweeps from approximately 20 to 30 Mc.

FIFTH: Adjust the oscilloscope so that the swept I.F. response is visible on the cathode-ray tube screen.

SIXTH: Loosely couple the output of the R.F. signal generator to the grid of V-2 so that marker signals of proper frequency can be mixed in with the R.F. sweep signal.

SEVENTH: Observe the band width, relative position of the picture carrier, and flatness of the overall I.F. response curve. If necessary slightly vary the tuning of the picture I.F. coils L6, L11, L12, L13, L14 until the picture I.F. responseshown in Figure 7 is obtained. The solid curve in Fig. 7 depicts the ideal I.F. response while the dotted curves show permissable variations.

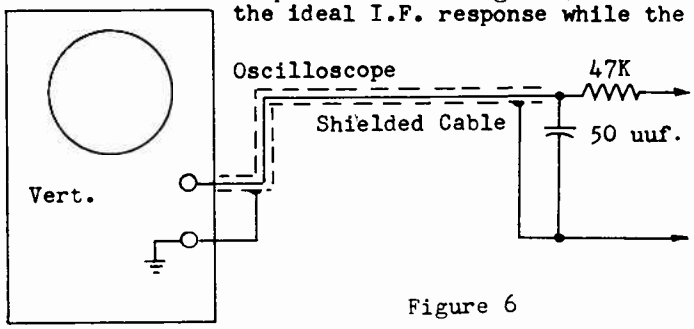

Figure 6

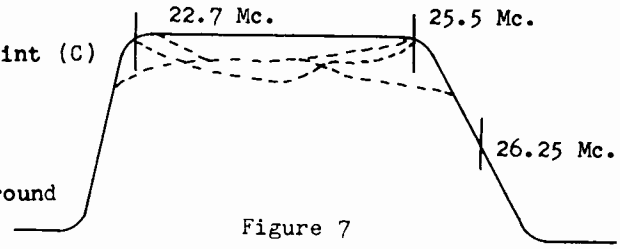

Figure 7

The picture I.F. carrier should appear approximately half way down the I.F. response curve as shown in Figure 7. Variation in the pix carrier position should not exceed ± 10% from the half way point.

STEWART-WARNER TELEVISION

Models 21T-9211B, 21T-9211C, 21C-9211D, 21C-9211E, & 21C-9211F

The service material below and circuits on the next three pages are exact for the Stewart-Warner models listed above. Model 9210C is very similar to these models. For convenience of printing, the circuit diagram is presented on a double page spread (over) and on the single page which follows. Such separation into sections is not to be taken to mean that the actual circuits are divided physically in this manner. Since the alignment information on other Stewart-Warner sets given on pages 160-162, in the 1952 Television Manual, Volume TV6, is applicable to these sets, it will not be repeated here.

PRODUCTION CHANGES

The following tabulation furnishes complete details on changes which occurred during receiver production. The receivers incorporating these changes are identified by coding stamped on rear surface of chassis. This coding consists of one or more letters following the word SERIES, as SERIES B, SERIES AC, etc., and corresponds to similarly lettered changes shown below. Chassis incorporate only that change indicated by letter designation; i.e., chassis stamped "SERIES BE" does not include changes "A" or "C" or "D".

The circuit shown applies to "SERIES ABC" chassis.

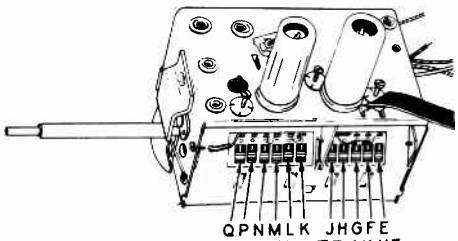

520645 R.F. TUNER UNIT
(SHOWN WITH SIDE SHIELD REMOVED)

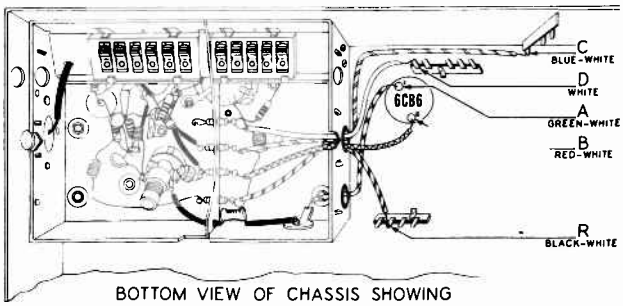

BOTTOM VIEW OF CHASSIS SHOWING CONNECTIONS TO RF TUNER UNIT

LETTER INCLUDED IN DESIGNATION FOLLOWING THE WORD "SERIES"	CHANGE INCORPORATED IN CHASSIS
UNCODED	**INITIAL PRODUCTION**
"A"	The following change was incorporated to allow the vertical hold control to operate in the center of its range. 1. Resistor 223 in grid circuit of V19A (Vertical Blocking Oscillator) was changed from 2 Meg. to 1.8 Meg.
"B"	The following change was incorporated only to facilitate production in bringing about a more consistent I.F. response curve. 1. Resistor 106 in grid circuit of V8 (3rd. I.F. Amp.) was changed from 6800 Ohms ± 10% to 4700 Ohms ± 5%.
"C"	This change was incorporated due to the unavailability of type 6BL7GT tube. 1. Tube V19 (Vert. Blocking Oscillator and Vert. Scanning Output) 6BL7GT, a duo-triode, was removed and replaced by two separate triode type tubes—V19, a 6C4 which is utilized as the Vert. Blocking Oscillator and V20, a 6S4 which is used for the Vertical Scanning Output stage. 2. The circuit of the former 6BL7GT tube is shown below. 3. Resistor 223 in grid circuit of V19 (Vert. Blocking Oscillator) was changed to 1.5 Meg. 4. Resistor 226 in grid circuit of V19 (Vert. Blocking Oscillator) was omitted. 5. The value of all the other components as well as their schematic location, utilized in the two stages remain the same.

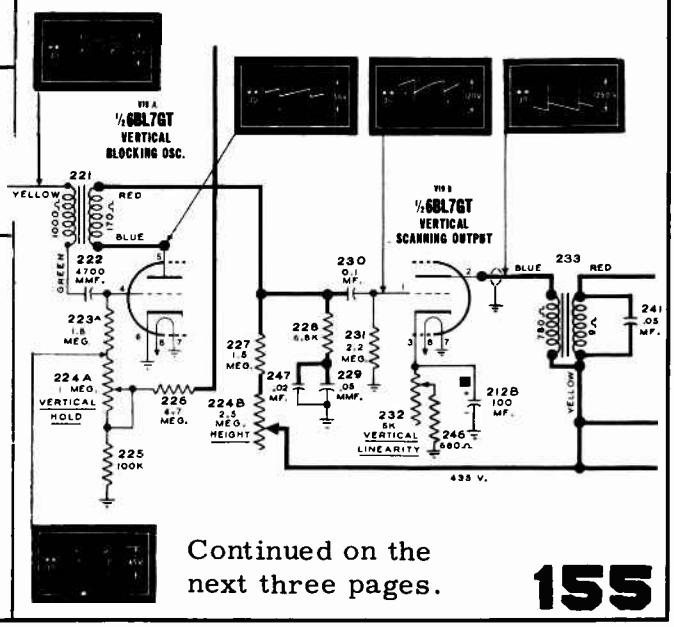

Continued on the next three pages.

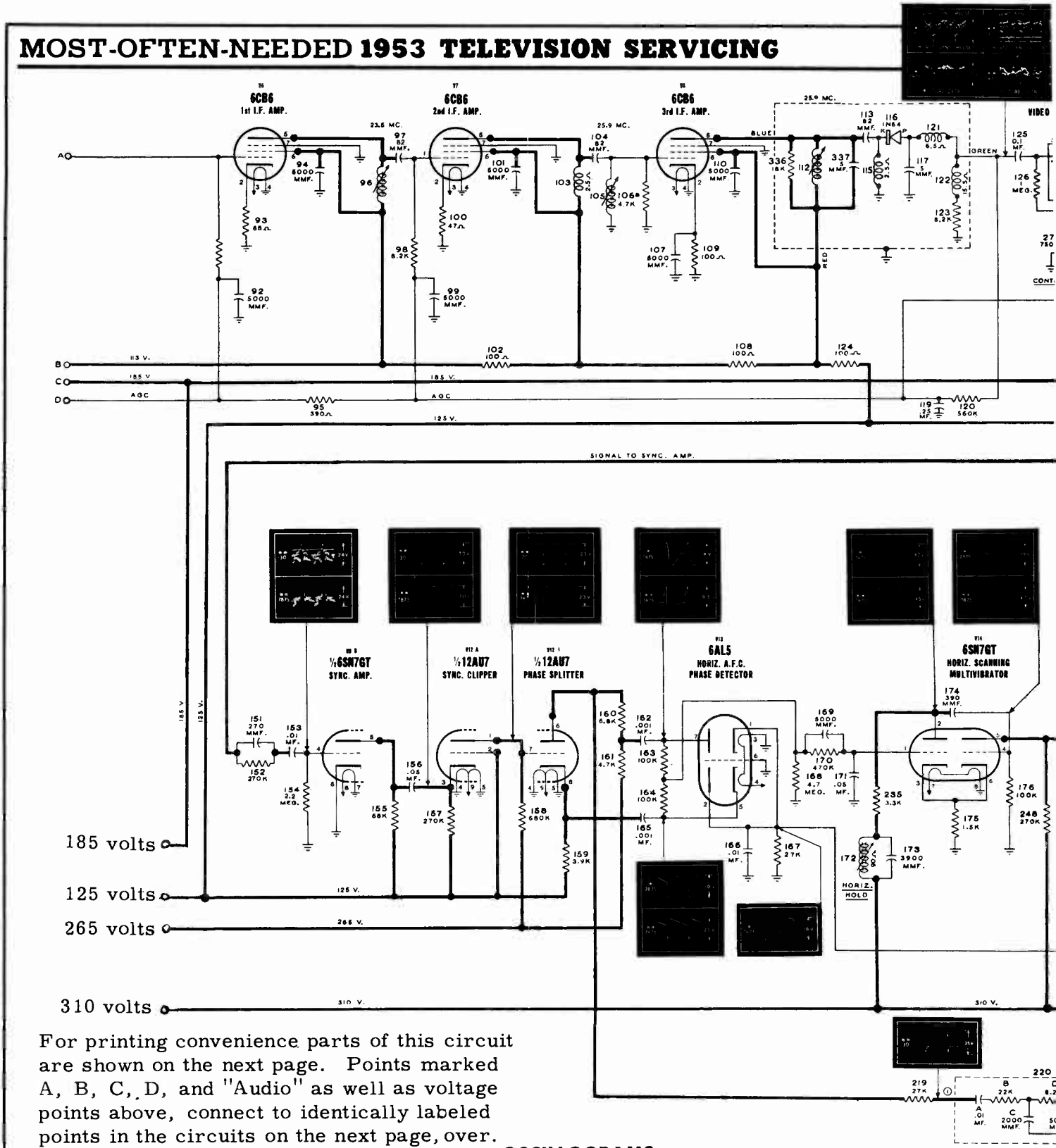

For printing convenience parts of this circuit are shown on the next page. Points marked A, B, C, D, and "Audio" as well as voltage points above, connect to identically labeled points in the circuits on the next page, over.

OSCILLOGRAMS

All oscillograms taken with ground lead of 'scope connected to receiver chassis (unless otherwise indicated) and with receiver controls set for normal reception of a station transmitting its standard test pattern.

Number appearing below asterisk specifies setting of horizontal frequency control on 'scope.

*—This symbol on illustration indicates that wave form was observed on a 'scope whose vertical amplifier had very limited high frequency response (50 to 100 Kc).

**—This symbol indicates that wave form was observed on a 'scope whose vertical amplifier frequency response was flat to within 20% up to 2 Mc.

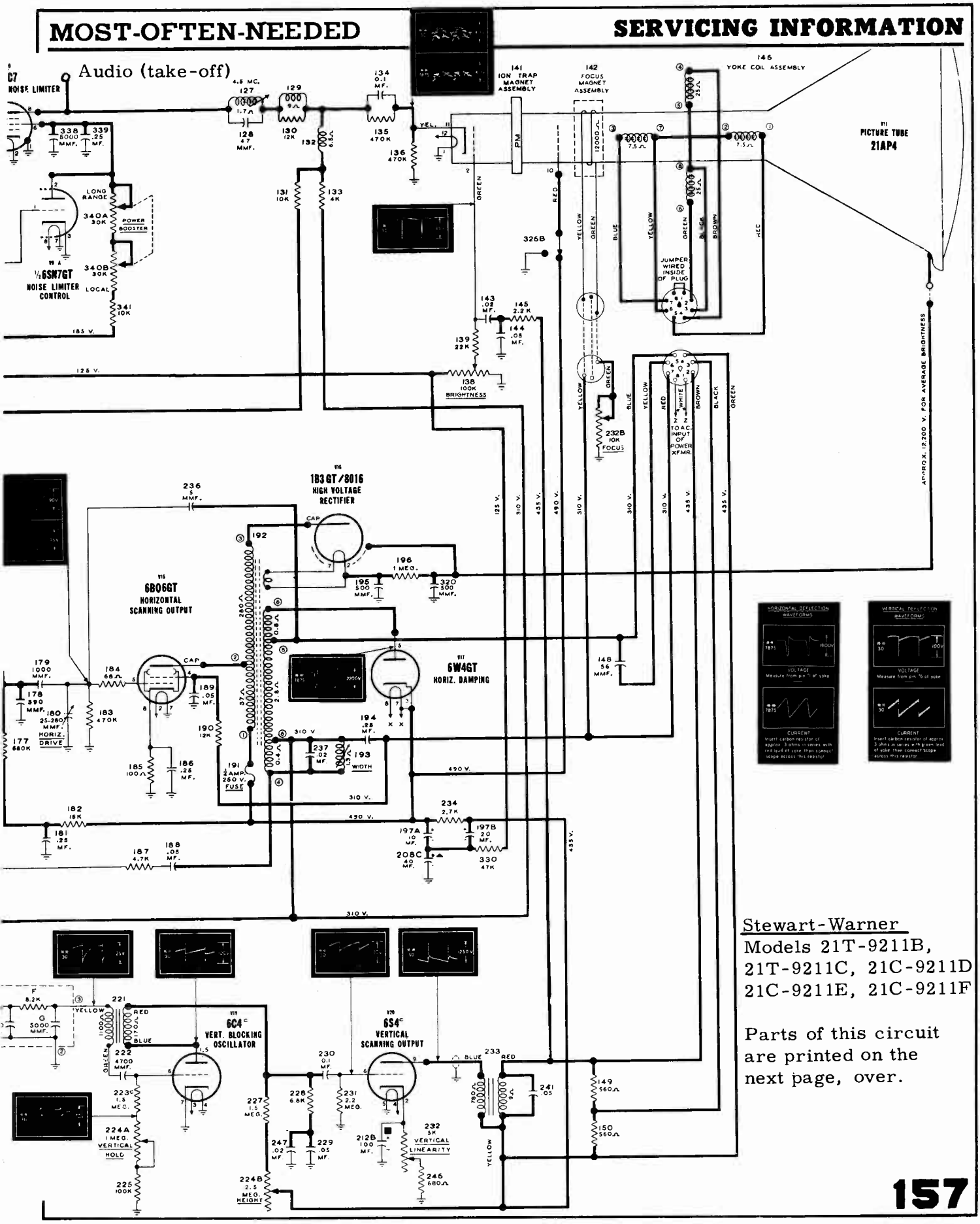

Stewart-Warner
Models 21T-9211B, 21T-9211C, 21C-9211D 21C-9211E, 21C-9211F

Parts of this circuit are printed on the next page, over.

Stewart-Warner Models 21T-9211B, 21T-9211C, 21C-9211D, etc. (continued)
(See preceding two pages for main circuit diagram)

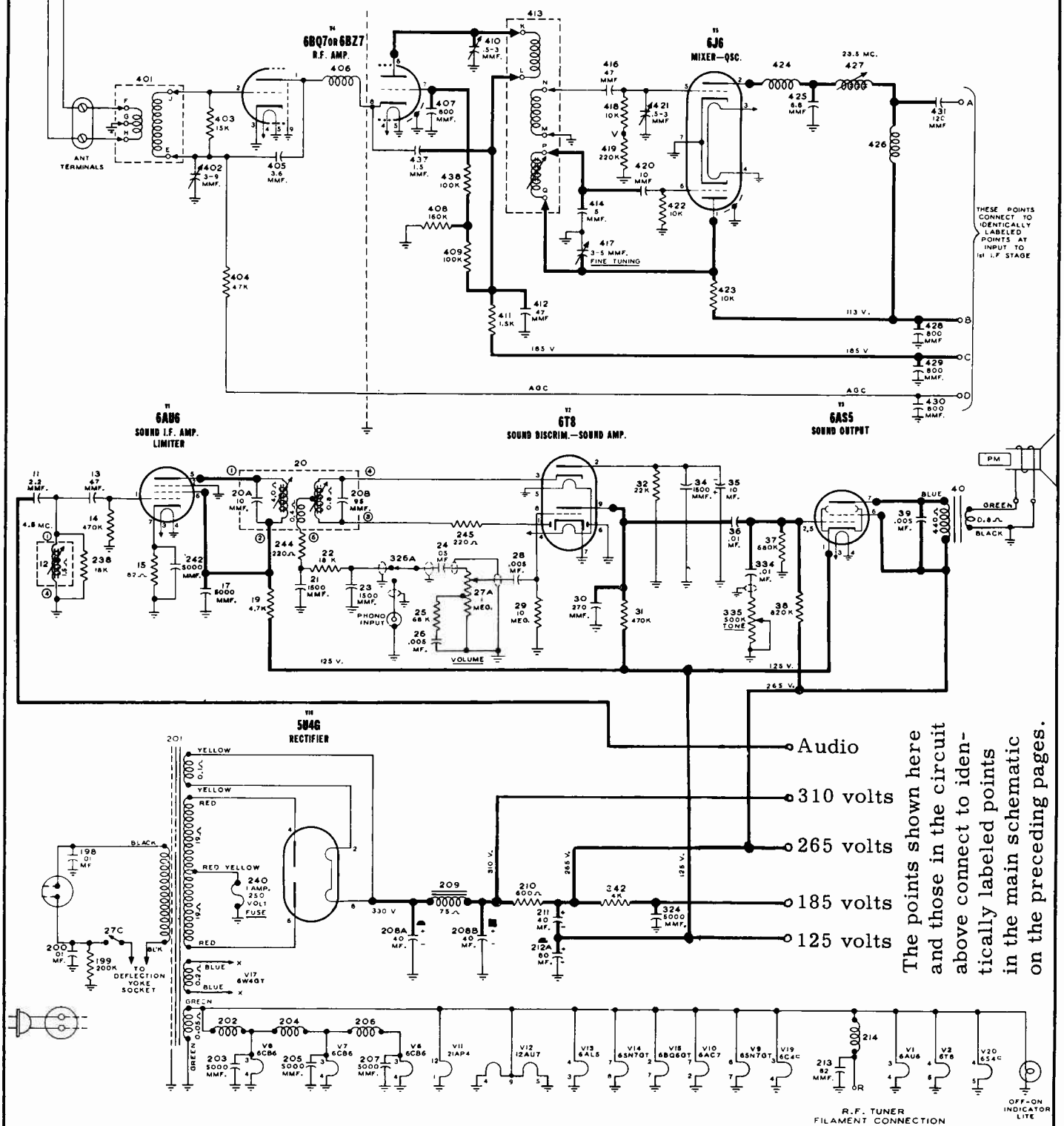

VOLTAGES SHOWN ON CIRCUIT DIAGRAM WERE MEASURED WITH ANTENNA TERMINALS SHORTED TO GROUND AND CHANNEL SELECTOR SET TO AN INACTIVE CHANNEL. ALL CONTROLS ARE SET FOR NORMAL OPERATION EXCEPT FOR POWER BOOSTER CONTROL WHICH WAS SET TO MAXIMUM COUNTER-CLOCKWISE POSITION.

STROMBERG-CARLSON COMPANY

417 SERIES 421 SERIES

	Signal Generator Connection	Oscilloscope or VTVM Connection	Adjustments and Notes
1 Quadruple Alignment	Output of sweep generator to grid of 1st IF tube, pin 1 of V-5, 6BA6 thru 100 MMF isolating capacitor.	Input of scope to grid of video amplifier, pin 4 of V-10, 6AG7 thru 47K ohm isolating resistor.	1. Adjust the bottom slug of T-3, 1st IF Transformer for low intermediate frequency. (23.7 mc. appox). 2. Adjust the bottom slug of T-4, 2nd IF Transformer for low frequency. (23.0 mc. approx). 3. Adjust the bottom slug of T-5, 3rd IF transformer for high frequency. (26.0 mc. appox). 4. Adjust the bottom slug of T-6, 4th IF transformer for high intermediate frequency. (25.3 mc. appox). 5. Maintaining the above relative frequency positions of the individual stages, adjust the slugs to produce a curve as shown with the 22.7 mc. and 26.4 mc. markers at 70% response. See Fig. 5.
2 Sound Traps	Same as Step #1 Using 21.9 mc. marker.	Same as Step #1.	1. Adjust the top slug of T-4 for minimum response at 21.9 mc. 2. Adjust the top slug of T-3 for curve shown in Fig. 6.
3 Adjacent Sound Trap	Same as Step #1 using 27.9 mc. marker.	Same as Step #1.	1. Adjust the top slug of T-5 for minimum response at 27.9 mc. 2. Repeat Step #1 (Quadruple alignment) to reproduce the curve as shown in Fig. 5.
4 Double-Tuned Stage Alignment	Couple the output of the sweep generator into the converter plate by means of the split tube shield. See Fig. 4.	Same as Step #1.	1. Adjust L-8 on tuner assembly and T-2 for curve as shown in Fig. 8 for maximum gain, maintaining the 22.7 mc. and 26.4 mc. markers at 50% response.
5 Sound IF Alignment	Connect an unmodulated 4.5 mc. signal to the grid of the 1st sound IF amp. pin 2 of V-9, 6U8.	Connect 2-100K resistors in series from plate of ratio detector pin 2 of V-13, 6T8 to ground. Connect VTVM from junction of the 2-100K resistors to ground.	1. Adjust L-10, T-7, and bottom slug of T-8 for maximum response.
6 Ratio Detector Balance	Same as Step #5.	Reconnect the VTVM from the junction of the 2-100K resistors (see 6 above) to the junction of C-134 and R-131.	1. Adjust the secondary (top slug) of T-8 for zero volts between the positive and negative excursions.

The material on Stromberg-Carlson Series 417 and 421 sets is presented on a total of eight pages. The alignment information below is exact for both series, but separate circuit diagrams are presented in double-page form to illustrate differences.

FIG. 5

FIG. 6

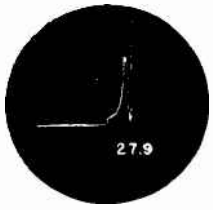

FIG. 7

FIG. 8

Continued on the next seven pages.

NOTE: USE A NON METALLIC ALIGNING TOOL AND LIGHT PRESSURE ON ALL SLUGS.

STROMBERG - CARLSON 417 Series
(Continued from the previous page)
The service material below and on the adjacent page to the right is exact only for 417 series, but can be used as an aid in servicing sets of the 421 series.

The following photographs were taken from a Du Mont 208-B Oscilloscope, using a standard receiver adjusted for normal picture.

Plate of Keyed AGC (pin 5 of V-16, 6AU6), 300 volts peak-to-peak — 15.75 Kc.

Cathode of phase detector (pin 1 of V-25, 6AL5), 12 volts peak-to-peak — 15.75 Kc.

Cathode of phase detector (pin 5 of V-25, 6AL5), 13 volts peak-to-peak — 15.75 Kc.

Plate of phase detector (pin 7 of V-25, 6AL5), 12 volts peak-to-peak — 15.75 Kc.

Plate of horizontal oscillator (pin 5 of V-19, 6SN7), 70 volts peak-to-peak — 15.75 Kc.

Grid of horizontal amplifier (pin 1 of V-20, 6AU5-GT), 150 volts peak-to-peak — 15.75 Kc.

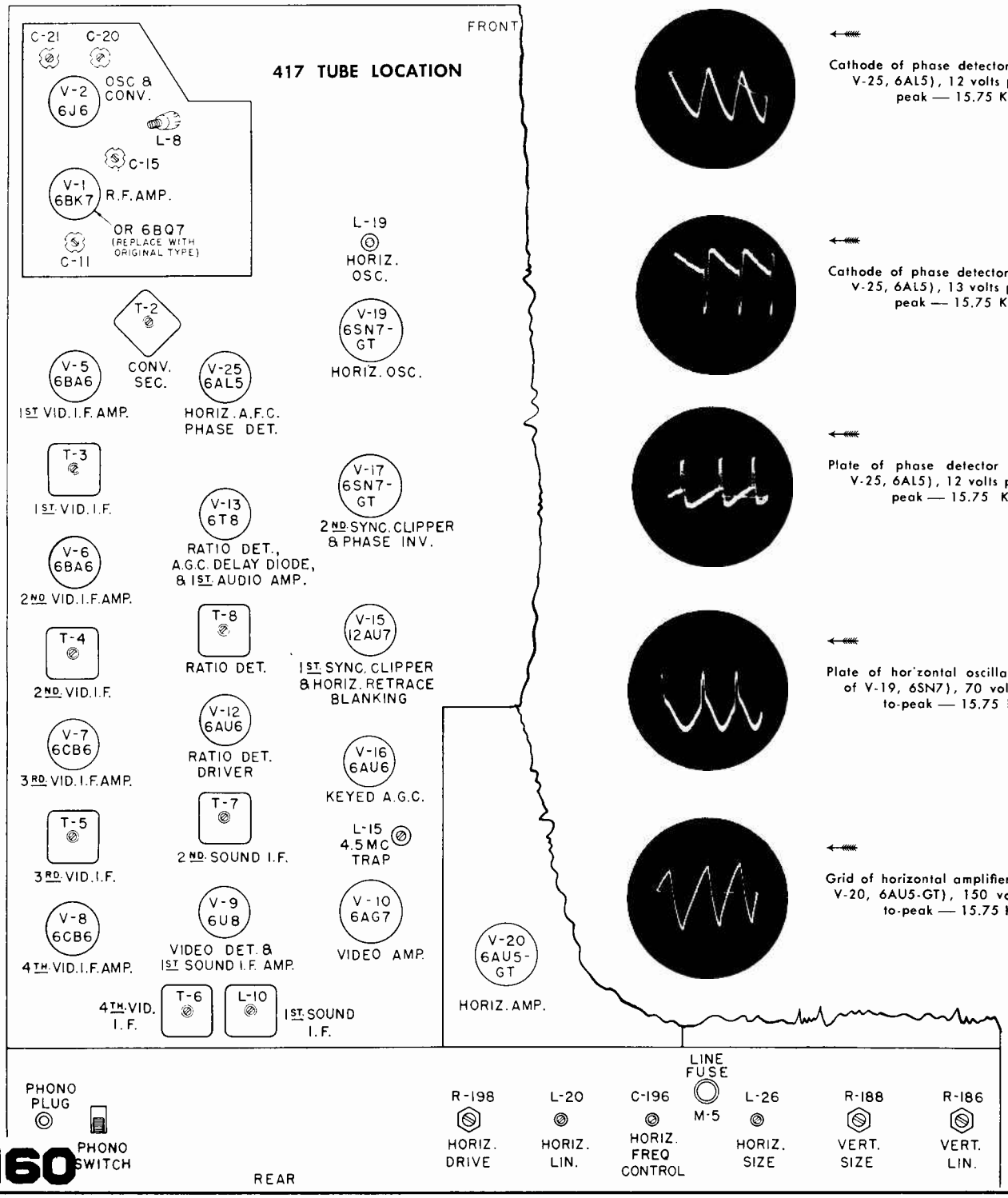

Plate of sync clipper (pin 5 of V-17, 6SN7), 30 volts peak-to-peak — 60 cps.

Grid of vertical output (pin 1 of V-18, 6BL7), 100 volts peak-to-

Output of vertical integrating network M-1, 25 volts peak-to-peak — 60 cps.

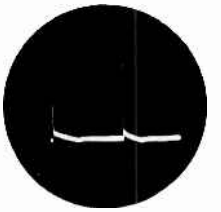

Plate of vertical output (pin 2 of V-18, 6BL7), 900 volts peak-to-peak — 60 cps.

Yellow lead to T-11, 50 volts peak-to-peak — 60 cps.

Red lead of vertical output transformer T-10, 70 volts peak-to-peak — 60 cps.

417 VOLTAGE CHART

1 — Measurements are made at 117 V. line using vacuum tube voltmeter. All voltages are D.C. positive with respect to chassis ground except where noted.

2 — All voltages shown in telev. section measured with range switch in TV position.

3 — Contrast control set maximum, brightness control set at minimum, antenna disconnected.

4 — Voltages shown with asterisk (*) vary considerably with control settings.

5 — Where no voltage is indicated, pin may be used as a tie point.

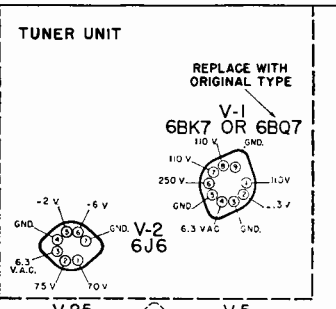

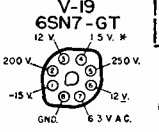

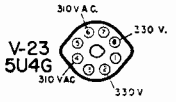

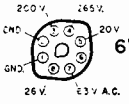

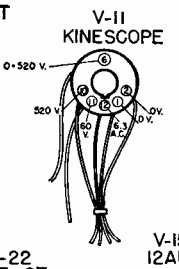

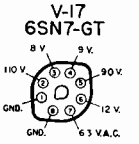

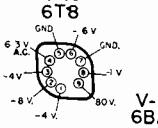

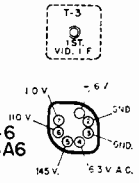

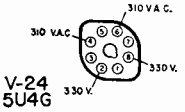

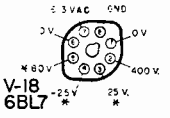

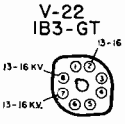

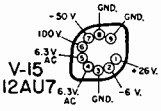

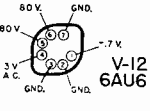

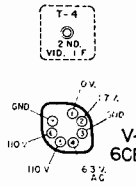

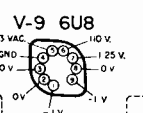

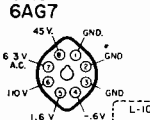

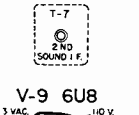

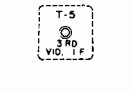

LOOKING AT INSIDE BOTTOM OF CHASSIS

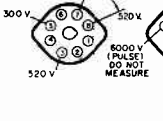

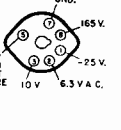

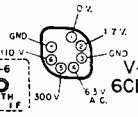

REAR

Stromberg-Carlson 417 Series Schematic Diagram

The video IF system consists of a double-tuned converter plate transformer followed by four single-tuned stages. These are the 1st, 2nd, 3rd, and 4th IF stages. They are aligned as a "Quadruple" unit, previous to the adjustment of the double-tuned stage. Three absorption type traps are located in the plates of the 1st, 2nd, and 3rd IF circuits. They are adjusted for the following frequencies: 1st IF (reaction trap) — 21.6 mc. approximately, 2nd IF (sound trap) 21.9 mc., 3rd IF (adjacent sound trap) 27.9 mc.

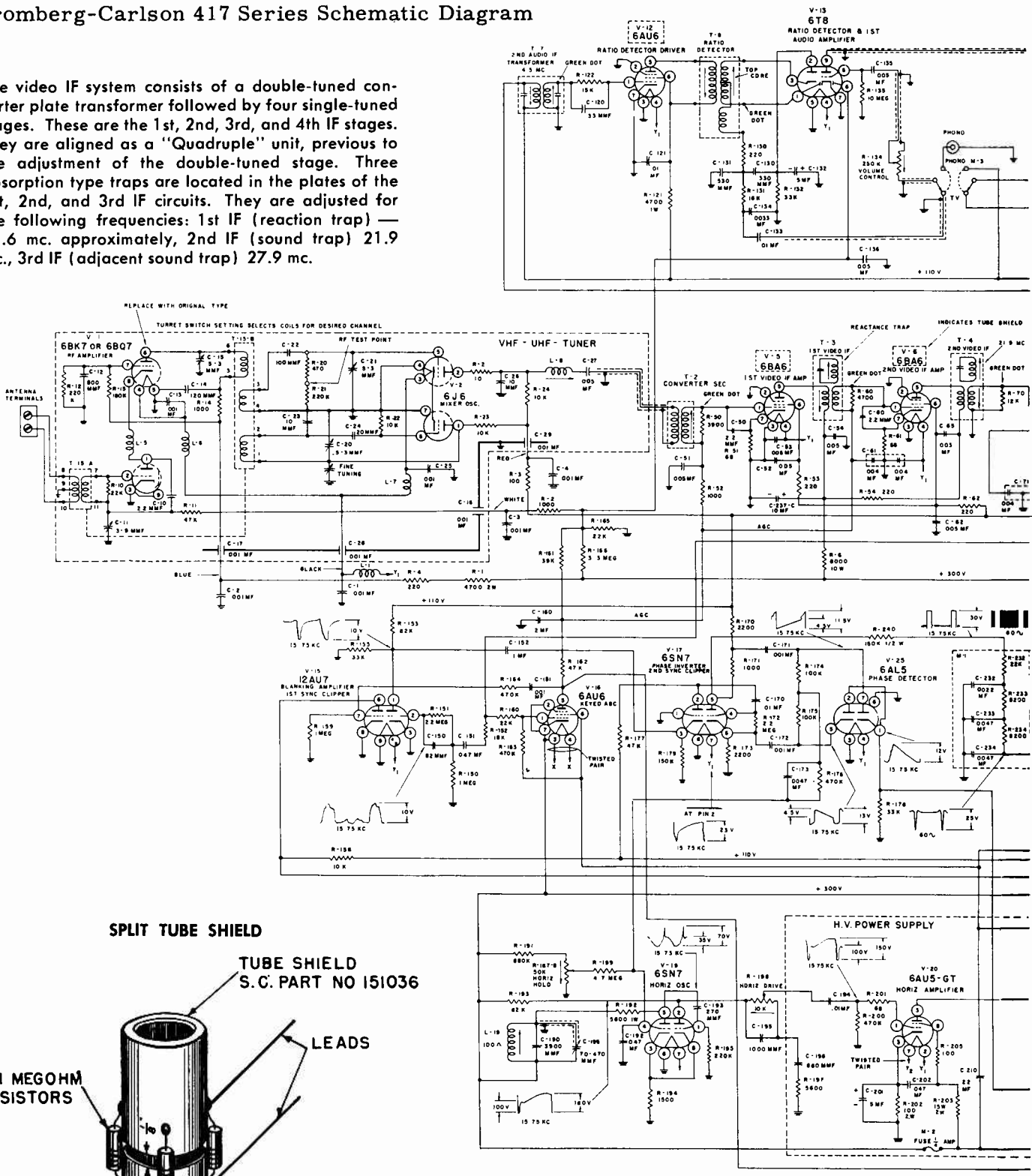

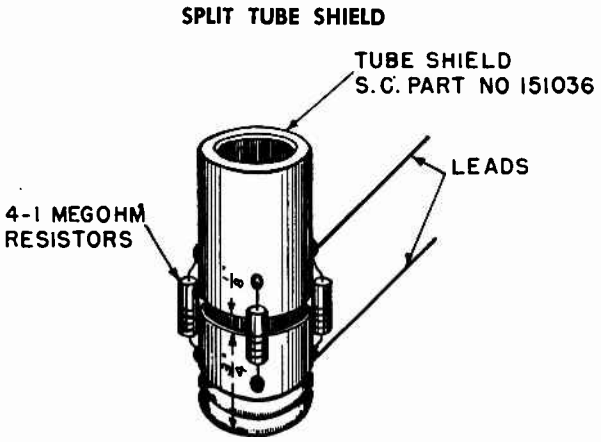

STROMBERG-CARLSON No. 417 SCHEMATIC DIAGRAM

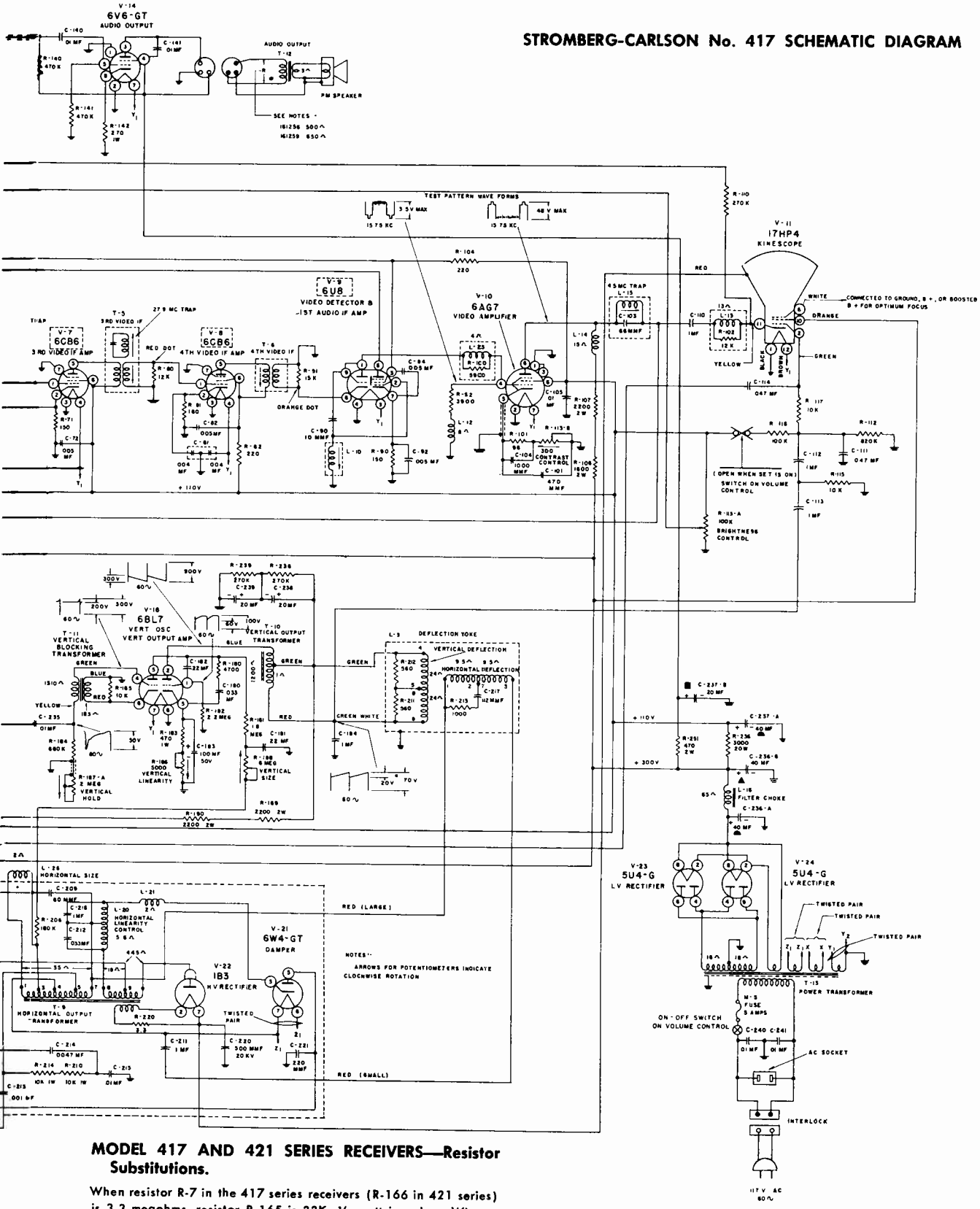

MODEL 417 AND 421 SERIES RECEIVERS—Resistor Substitutions.

When resistor R-7 in the 417 series receivers (R-166 in 421 series) is 3.3 megohms, resistor R-165 is 22K, ½ watt in value. When a 3.9 megohm, ½ watt resistor (Part No. 28198) is used as a substitute in production in the R-7 (R-166) position, then R-165 must be a 27K, ½ watt resistor (Part No. 28174).

MODEL 421 RECEIVERS — Component Part Substitutions.

The following parts may be substituted in production for the originally specified parts.

Schematic Position	Specified Value	Substitute Value
C-221	220 mmf., 500 V.	270 mmf., 500 V.
C-198	470 mmf., 500 V.	470 mmf., 500 V.
C-183	100 mf., 50 V.	40 mf., 400 V.
R-215	27 ohms, 1 W. 20%	33 ohms, 1 Watt
R-81	180 ohms, ½ W. 10%	180 ohms, ½ W. 5%
R-107	2000 ohms, 7 W. 10%	2000 ohms, 10 W. 10%
R-211, R-212	560 ohms, ½ W. 10%	560 ohms, ½ W. 10%
R-135	10 Megohms, ½ W. 20%	6.8 Megohms, ½ W. 10%
R-185	10K ohms ½ W. 20%	15K ohms, 1 W. 20%
R-238, R-239	270K ohms, ½ W. 10%	330K ohms, 1 W. 10%
R-111	1 Megohm, ½ W. 20%	1.5 Megohms, ½ W. 20%
R-52	1K ohms, ½ W. 20%	470 ohms, ½ W. 20%
R-196	2200 ohms, ½ W. 10%	2200 ohms, ½ W. 20%

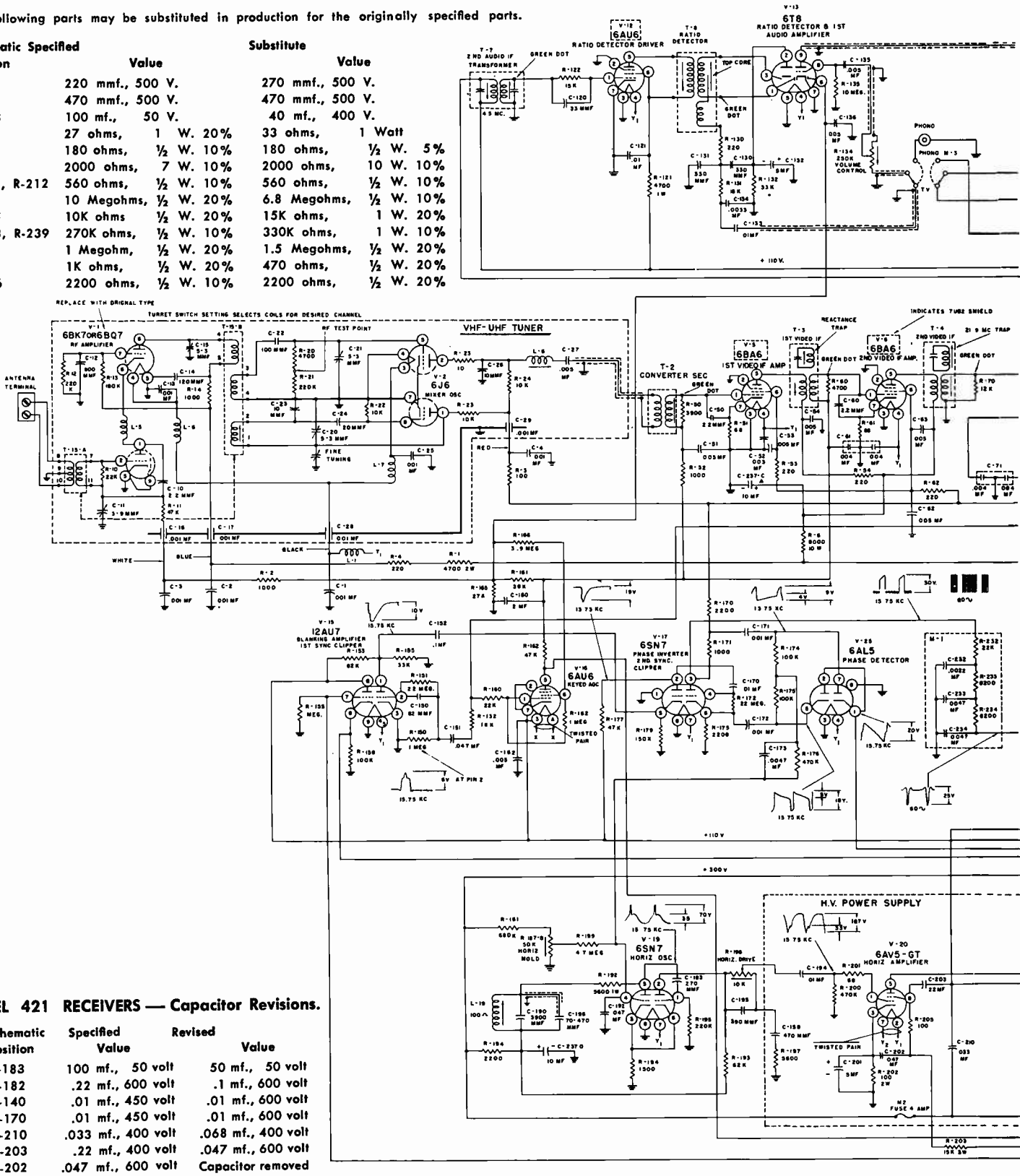

MODEL 421 RECEIVERS — Capacitor Revisions.

Schematic Position	Specified Value	Revised Value
C-183	100 mf., 50 volt	50 mf., 50 volt
C-182	.22 mf., 600 volt	.1 mf., 600 volt
C-140	.01 mf., 450 volt	.01 mf., 600 volt
C-170	.01 mf., 450 volt	.01 mf., 600 volt
C-210	.033 mf., 400 volt	.068 mf., 400 volt
C-203	.22 mf., 400 volt	.047 mf., 600 volt
C-202	.047 mf., 600 volt	Capacitor removed

STROMBERG-CARLSON No. 421 SCHEMATIC DIAGRAM

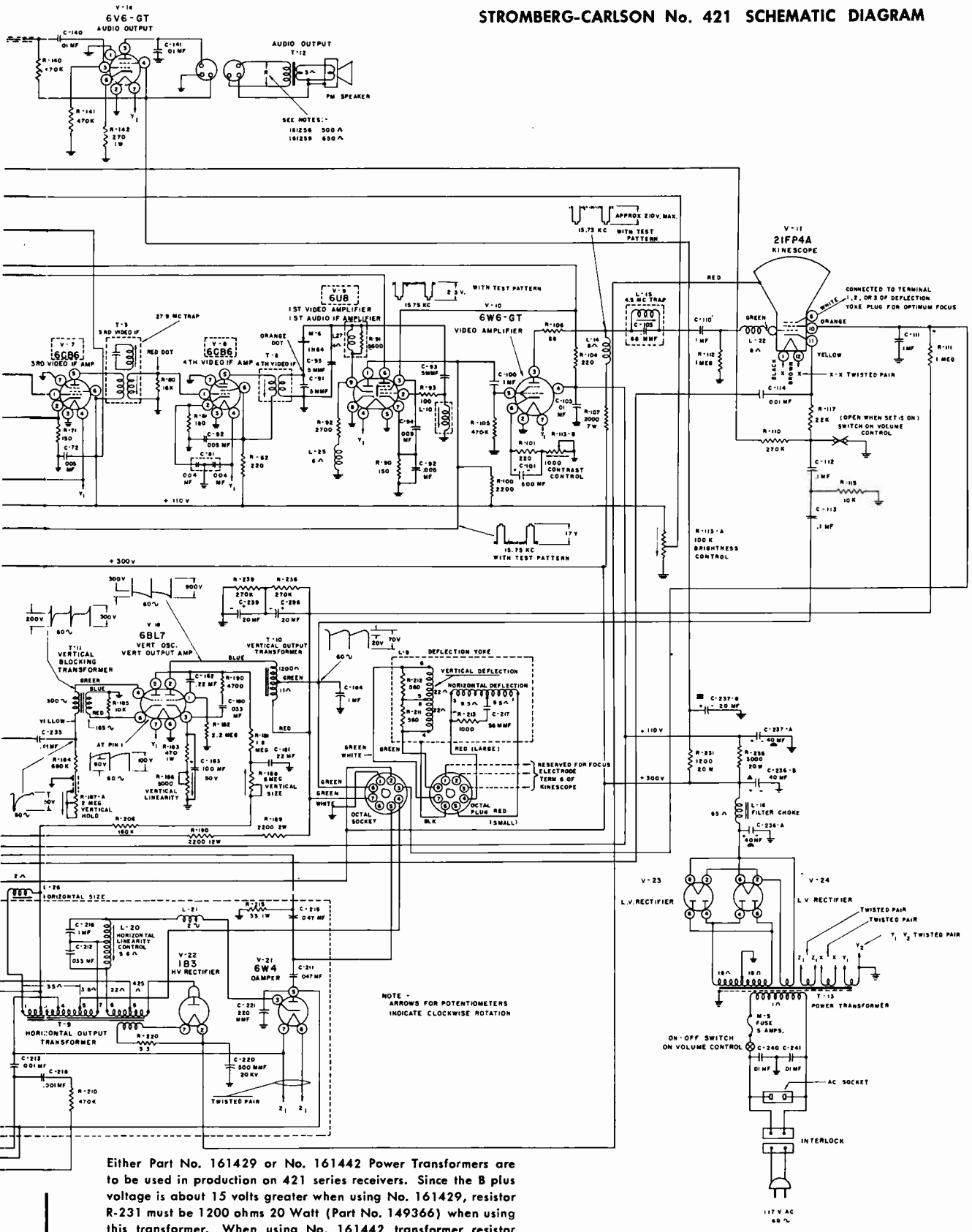

Either Part No. 161429 or No. 161442 Power Transformers are to be used in production on 421 series receivers. Since the B plus voltage is about 15 volts greater when using No. 161429, resistor R-231 must be 1200 ohms 20 Watt (Part No. 149366) when using this transformer. When using No. 161442 transformer resistor R-231 will be 470 ohms, 2 watt (Part No. 149074).

Stromberg-Carlson Series 417 and 421, Revisions and Production Changes

MODELS 417 AND 421 RECEIVERS — Redesign to Reduce Dissipation of 6V6GT—Audio Output Tube.

The value of R142, cathode resistor for the 6V6GT audio output tube has been increased from 270 ohms, 1 watt to 330 ohms, 1 watt (New Part No. 149135, 149073 or 149229).

Series dropping Resistor R-231 is specified as a 470 ohms, 2 watt value with the use of Power Transformer No. 161442. The value of this R-231 resistor is now being increased to 1250 ohm, 5 watt.

MODEL 421 RECEIVERS — More Uniform Horizontal Oscillator Operation.

The operation of the horizontal oscillator has been made more uniform from set to set and the tendency to pull horizontally at the top of the picture has been reduced by the following changes in Production:

1. R-194, 1500 ohm resistor is now a 5% tolerance value instead of the previous 10%.
2. Resistor R-195 has been changed from a 220K, ½ watt, 20% value to a 180K, ½ watt, 10% value (New Part No. 28182).
3. Capacitor C-193 has been increased in from 270 MMF, 20% to a 390 MMF, 10% value (New Part No. 110262).
4. C-198, 470 MMF capacitor is now a 10% value instead of a 20% value.
5. A 33 MMF, 10% mica capacitor (Part No. 110250) has been added between plate (No. 5 pin) of the 6SN7 Horizontal Oscillator (V-19) and ground.

MODELS 417 AND 421 RECEIVERS — Damper Tube Revision.

A 6AX4 tube (Part No. 162161) is now being used in place of a 6W4GT tube in the Damper Circuit. Tube location diagrams in the receivers show those receivers which use either type.

The 6AX4 tube is being used in those receivers which use Power Transformer No. 161442 which has one less heater winding. The jumper lead between No. 7 pin of the Damper Socket and No. 4 terminal of the Horizontal Output Transformer is not necessary with the use of the 6AX4 tube since the heater and cathode breakdown value is higher and they do not have to be maintained at relatively the same potential as in the case of the 6W4 tube.

MODELS 417 AND 421 RECEIVERS — Revisions of Filtering in Tuner Supply Leads.

The 100 MMF capacitors in positions C-1, C-2, C-3 and C-4 and resistors R-3 and R-4 have been removed from the circuits of the subject receivers because of rearrangement of the supply leads to the tuner thereby eliminating the need for this filtering.

MODEL 417 AND 421 RECEIVERS — Additional Changes for Improving Vertical Hold.

This complete change is as follows:

1. A 100,000 ohm resistor (R-240) rather than 150,000 ohm resistor has been added directly in series with the connection between the No. 5 pin (plate) of the V-17, 6SN7 Phase Inverter—2nd Sync Clipper tube and the input to the M-1 vertical integrator network.
2. Resistor R-184 has been increased in value from 680K to 1 megohm, (Part No. 149119). A 2 megohm resistor, (Part No. 149121) has been bridged in parallel across the two outside terminals of the R-187A, 2 megohm Vertical Hold Potentiometer. At a later date a new 1 megohm potentiometer (Part No. 145146) will replace the above combination 2 megohm potentiometer and parallel 2 megohm resistor.
3. The vertical oscillator transformer has been moved from the previous position near mid-chassis to the area behind the volume control which results in interlace improvement and possibly contributes to better vertical hold.

MODEL 421 SERIES RECEIVERS — Vertical Drift.

Repeated failure of the 6BL7 "Vertical Blocking Oscillator and Vertical Output Tube" has dictated the following change on all chassis date coded 52-20-1:

— A 6C4 tube was added in an unused tube socket punchout on the front left hand corner of all 421 chassis to replace ½ of the 6BL7 tube, i.e., the vertical blocking oscillator section of V-18.

— The lead going to Pin 4 of V-18 was reconnected to Pin 6 of the 6C4.

— The lead going to Pin 5 of V-18 was reconnected to Pin 1 or Pin 5 of the 6C4.

— The lead going to Pin 6 of V-18 was reconnected to Pin 7 of the 6C4.

— The filament Pins 3 and 4 of the 6C4 are connected to the filament string.

— The unused Pins 4, 5 and 6 of the 6BL7 are grounded.

If an earlier 421 receiver is encountered having a 6BL7 causing vertical roll and not incorporating the 6C4, it is suggested that the 6BL7 be changed to one of the improved 6BL7's. These tubes can be identified by referring to the coding etched in the top of the glass envelope beneath the 6BL7 tube type designation.

MODEL 421 SERIES RECEIVERS — Proper Set-up Adjustments for Maximum In-Focus Picture Area.

Since the 421 receivers use fixed-voltage-electrostatic-focus, picture tubes (21FP4A) the following suggestions will be helpful in obtaining maximum in-focus picture-area at the time the receiver is initially set-up.

1. The ion trap should be adjusted in the normal manner for maximum brightness but within the adjustment range of maximum brightness, a specific setting of the ion trap will be observed where maximum in-focus-picture-area can be obtained.
2. The centering assembly, which consists of a device similar in appearance to an ion trap (except for a rotatable magnet in the form of a black button), should be placed away from the ion trap and up close to the deflection yoke on the neck of the picture tube. In this way, magnet field interference between the ion trap and centering device is minimized and better focus can be obtained.
3. Additional physical separation between the ion trap magnet and the centering device magnet can be obtained by keeping the two magnets on opposite sides of the picture tube. Proper brightness adjustment and proper picture centering should still be observed.
4. It should be noted that the picture tube focusing anode (white lead) can be connected to one of three voltage take-off points in the receiver: (1) Ground (2) B+ Supply (3) Boosted D. C.

MODEL 421 SERIES RECEIVER — Noise Cancellation Circuit Adjustment.

All 421 model television receivers coded 52-30-1 or later incorporate a new circuit development known as "Noise Cancellation". All chassis having this circuit can be readily identified by an additional potentiometer to the right of the phono switch on the rear chassis flange labeled "Noise Cancellation Control". It is important that this control be properly adjusted in order to realize full value of the noise cancelling circuit. When the "noise cancel" control is in its extreme counterclockwise position, the noise cancellation circuit is ineffective; when it is in its extreme clockwise position, the cancellation circuit will clip sync and picture and cause a dark picture with no sync action.

The proper procedure for adjusting the "noise cancel" control is to first make all picture adjustments, size, linearity, etc., with the "noise cancel" control in its extreme counter-clockwise position. After all picture adjustments ore made, properly tune in the strongest signal in the area and slowly advance the "noise cancel" control clockwise until the picture starts to lose sync, then back off the control until the picture is stable.

SYLVANIA

Chassis 1-508-1, 1-508-2, used in Models 172K, -KU, -M, -MU; 175B, -BU, -L, -M, -MU; 176B, -BU, -L, -M, -MU; 177B, -BU, -M, -MU; 178B, -BU, -M, -MU.
Chassis 1-510-1, 1-510-2, used in Models 120B, -BU, -M, -MU; 126B, -BU, -L, -M, -MU.
Chassis 1-504-1, 1-504-2, used in Models 105B, -BU, -M, -MU, is a 17-inch version of 1-510-1, -2, and is electrically similar to these chassis.

Service material on the above listed Sylvania TV sets is presented on the next eight pages. General information is given below and top view of sets is shown on page 168. Alignment information is given on pages 169-170; circuits are printed on pages 171 and 172; and on pages 173-174 are presented important revisions and code changes.

Chassis 1-508-1 and 1-510-1 provide reception of the twelve commercial VHF television channels, 2 through 13 inclusive. In these chassis, provisions are made for the simple addition of a UHF tuner, thus permitting reception of channels 14 through 83 of the UHF band. Models incorporating chassis 1-508-1 and 1-510-1 show a single alphabetical suffix after the body number. (For example: 176M.)

Chassis 1-508-2 and 1-510-2 include the UHF tuner and thus provide reception of VHF channels 2 through 13 and UHF channels 14 through 83 inclusive. Models incorporating these chassis show a double alphabetical suffix after the body number. (For example: 176MU.)

Combination models incorporating these chassis also include a 1-603-1 radio chassis which provides reception of standard and frequency modulation broadcast bands.

Chassis 1-508-1 operates with twenty-seven tubes plus the picture tube. Of this total there are two low voltage rectifiers, two high voltage rectifiers and one regulator tube. A germanium diode is also incorporated in the circuit. Chassis 1-508-2 incorporates two additional germanium diodes and one receiving type tube in the UHF tuner.

Chassis 1-510-1 incorporates a total of twenty-two tubes in addition to the picture tube. Of these tubes one is a low voltage rectifier, two are high voltage rectifiers and one is a regulator tube. A germanium diode is also incorporated on this chassis. Chassis 1-510-2, in addition to the previous complement, includes two receiving type tubes as part of the UHF tuner.

NOTE: For convenience in servicing, separate schematics are furnished.

Sylvania television chassis 1-504-1 and 1-504-2 are the 17 inch versions of the 1-510-1 and 1-510-2 TV chassis, respectively. Electrically, the two chassis series are very similar.

AGC CONTROL ADJUSTMENT

(1-508-1, 1-508-2)

1. Connect a good antenna installation to the receiver.
2. Set Picture (Contrast) control to approximately 7/8 of maximum position leaving Brightness control at normal setting.
3. Tune receiver to the strongest station available in area.
4. Turn AGC control fully clockwise so that picture is "blacked" out.
5. Retard AGC control to a point where the picture reappears and does not tear or fall out of synchronization as the Fine Tuning control is rocked through the picture.
6. If, when the AGC control is finally adjusted, the picture has too much contrast, reduce the contrast with the Picture (Contrast) control. DO NOT use the AGC control as a contrast control.
7. Turn Volume control to normal level. Intercarrier buzz should be negligible as the Fine Tuning control is rocked near the correct tuning point. Retard AGC control slightly if objectionable. (Note: Intercarrier buzz is merely a reference for correct adjustment of the AGC control and only a slight touch up should be necessary. If much adjustment is required to remove intercarrier buzz, the sound section is maladjusted and requires realignment.)

Note: The intent of the AGC control adjustment is to ensure proper AGC voltage consistent with correct synchronizing action and negligible intercarrier buzz. This condition ensures the best possible synchronization under interference conditions, and also the greatest amount of picture contrast.

SYLVANIA

Chassis 1-508-1, 1-508-2, and 1-510-1, 1-510-2.

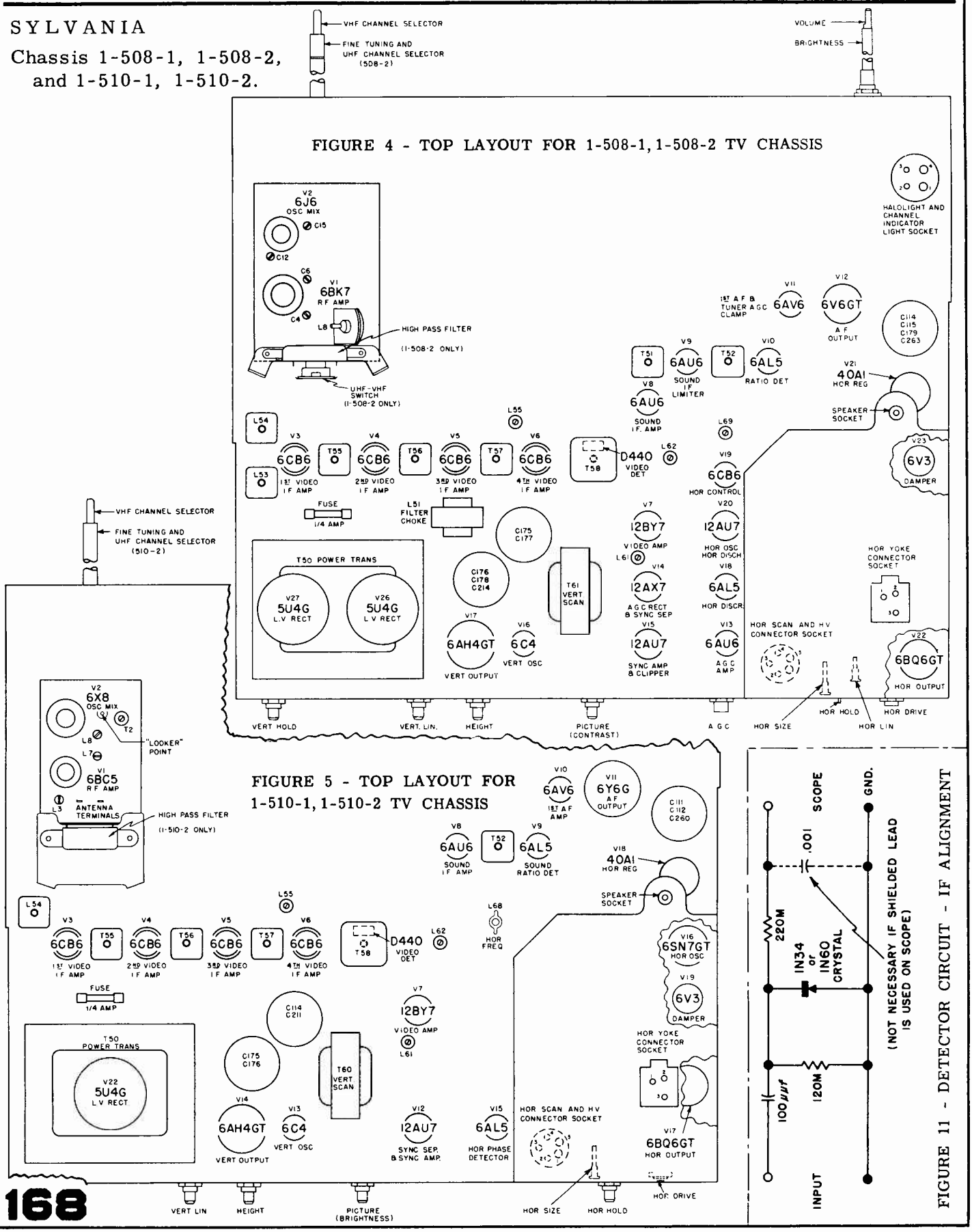

FIGURE 4 - TOP LAYOUT FOR 1-508-1, 1-508-2 TV CHASSIS

FIGURE 5 - TOP LAYOUT FOR 1-510-1, 1-510-2 TV CHASSIS

FIGURE 11 - DETECTOR CIRCUIT - IF ALIGNMENT

SYLVANIA

VIDEO IF ALIGNMENT —ALL CHASSIS

STEP	SIGNAL GENERATOR Connection	SIGNAL GENERATOR Freq.	SWEEP GENERATOR Connection	SWEEP GENERATOR Freq.	VTVM CONNECTION	OSCILLOSCOPE CONNECTION	ADJUST	OUTPUT READING	COMMENTS
1	To raised tube shield on Osc.-Mixer	39.75 Mc.	—	—	Across Diode Load Res. (1-508-1, -2) R152 3.3M / (1-510-1, -2) R149 4.7M	—	(1-508-1, -2) Top Core L53 / (1-510-1, -2) Top Core L54	Min.	Set Tuner to free channel. Apply −12V. between junction of R137 and C131 and Chassis on 1.508-1 and -2; −3V. between C136 and Chassis on 1-510-1, -2. Use sufficient output for satisfactory readings.
2	Loosely Couple Marker to Control Grid of Osc.-Mixer (1-508-1, -2) through Hole in Tuner Cover to Pin 5 of 6J6 / (1-510-1, -2) Pin 7 of 6X8	45.75 Mc. 42.1 Mc.	(1-508-1, -2) through Hole in Tuner Cover to Pin 5 of 6J6 / (1-510-1, -2) Pin 7 of 6X8	43.25 Mc. 10 Mc. Sweep	—	Through Detector Circuit (Fig. 11) to Cathode, Pin 2 of V3-6CB6	(1-508-1, -2) L53 (Bot. Core) L8 (Tuner) L54 / (1-510-1, -2) L54 (Bot. Core) T2 (Tuner)	Response Curve shown in Fig. A	Remove AGC voltage. Short pin 5 to pin 6 on V3-6CB6. Lower Osc.-Mixer tube shield to normal position. Set 1-508-1,-2 VHF tuner between any two channels. Set 1-510-1,-2 VHF tuner to any free high channel. L54 controls width of curve on 1-508-1,-2.
3	Repeat step 2 adjustments until curve is flat with 42.1 Mc. and 45.75 Mc. markers on corners. REMOVE SHORT FROM V3 before proceeding with step 4.								
4	To raised tube shield on Osc.-Mixer	41.25 Mc.	—	—	Across Diode Load Res. (1-508-1, -2) R152 3.3M / (1-510-1, -2) R149 4.7M	—	L55 4th Video IF Trap	Min.	Set Tuner to free channel. Apply −12V. between junction of R137 and C131 and Chassis on 1-508-1, -2. −3V. between C136 and Chassis on 1-510-1, -2. Use sufficient output for satisfactory readings.
5	Same as 4	47.25 Mc.	—	—	Same as 4	—	Top Core of T56	Min.	Same as 4
6	Same as 4	41.25 Mc.	—	—	Same as 4	—	Top Core of T55	Min.	Same as 4
7	Same as 4	44.0 Mc.	—	—	Same as 4	—	T58	Max.	Same as 4. Reduce Sig. Gen. output to keep VTVM reading between 1 and 2 Volts.
8	Same as 4	42.0 Mc.	—	—	Same as 4	—	T57	Max.	Same as 7
9	Same as 4	45.2 Mc.	—	—	Same as 4	—	T56 (Bot. Core)	Max.	Same as 7
10	Same as 4	43.2 Mc.	—	—	Same as 4	—	T55 (Bot. Core)	Max.	Same as 7
11	Repeat steps 4 to 6 inclusive.								
12	Loosely couple marker to raised tube shield on Osc.-Mixer	41.25 Mc. 42.1 Mc. 45.75 Mc. 47.25 Mc.	To raised tube shield on Osc.-Mixer	43.25 Mc. 10 Mc. Sweep	—	Across Diode Load Res. with 33M Resistor in series with hot scope lead	T58, T57 T56 (Bot. Core) and T55 (Bot. Core)	Response Curve shown in Fig. B	Same as 4 Use low signal input and high scope gain.

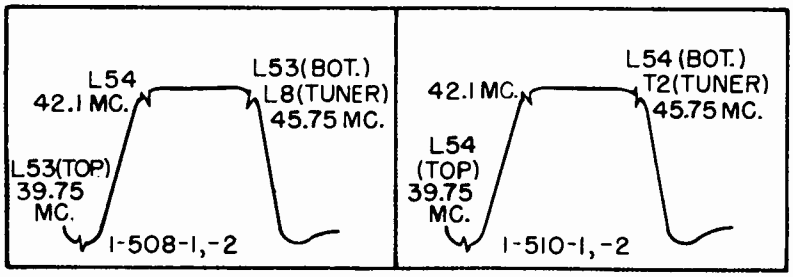

FIG. A

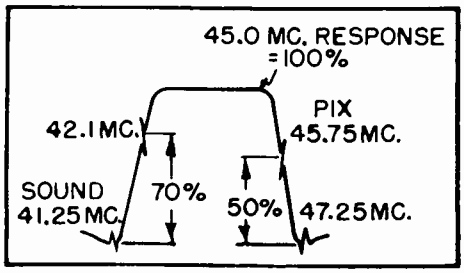

FIG. B

SYLVANIA

4.5 MC. TRAP ALIGNMENT —ALL CHASSIS (Continued)

STEP	SIGNAL GENERATOR Connection	Freq.	VTVM CONNECTIONS Probe	Ground Lead	ADJUST	OUTPUT READING	COMMENTS
1	To Pin 2 of 12BY7 Video Amplifier (all chassis)	4.5 Mc.	RF Probe connected to Cathode (Pin 11) of Picture Tube	To chassis	L61	Min.	Short Pin 1 of V6-6CB6 4th Video IF Amplifier to Chassis

SOUND ALIGNMENT —ALL CHASSIS

STEP	SIGNAL GENERATOR CONNECTION	VTVM CONNECTIONS DC Probe	Ground Lead	ADJUST	OUTPUT READING	COMMENTS
1	ALL CHASSIS 45 Mc. and 4.5 Mc. generators each connected through a 1000 ohm resistor to pin 1 of V3-6CB6 1st video IF Amplifier. or 45 Mc. generator with 4.5 Mc. marker (preferably crystal controlled) through 1000 ohm resistor to pin 1 of V3.	(1-508-1, -2) To junction of R103 and C104. (1-510-1, -2) To pin 5 of V9-6AL5	(1-508-1, -2) To chassis. (1-510-1, -2) To pin 7 of V9.	(1-508-1, -2) T51 Sec. (top core) pri. (bot. core) and L62. (1-510-1, -2) T52 Sec. (top core) pri. (bot. core) and L62.	Max. Max.	Set tuner to free channel with minimum interference.
2	Same as 1.	1-508-1, -2 only. To pin 5 of V10-6AL5	1-508-1, -2 only To pin 7 of V10.	1-508-1, -2 only T52 primary.	Max.	On 1-508-1, -2 keep output of signal generator to value where voltage across R103 does not exceed 1.0 volt negative.
3	Same as 1.	(1-508-1, -2) To junction of 2 matched 100M resistors connected in series across R109. (1-510-1, -2) Same as above with 100M resistors across R105.	(1-508-1, -2) To junction of R105, R106 and C106. (1-510-1, -2) To junction of R103 and C103.	T52 secondary (top core).	Zero	Set VTVM to lowest DC scale. Slight turn of core will produce either a positive or negative deflection on VTVM.
4	Remove test equipment and resistors.					

ALTERNATE SOUND ALIGNMENT —ALL CHASSIS

This method prevents inaccuracies of test equipment from affecting sound alignment

STEP	SIGNAL SOURCE	VTVM CONNECTIONS DC Probe	Ground Lead	ADJUST	OUTPUT READING	COMMENTS
1	Connect a good antenna installation to the receiver					
2	Chassis 1-508-1, 1-508-2 only					
	Strong station	To terminal 3 of T51	To chassis	L62 T51 (Both Cores)	Max.	Repeat all adjustments until maximum is reached
3	Strong station	(1-508-1, -2) To pin 5 of V10-6AL5 (1-510-1, -2) To pin 5 of V9-6AL5	(1-508-1, -2) To pin 7 of V10-6AL5 (1-510-1, -2) To pin 7 of V9-6AL5	(1-508-1, -2) T52 Pri. (Bottom Core) (1-510-1, -2) L62 T52 Pri. (Bottom Core)	Max.	Repeat all adjustments until maximum is reached
4	Strong station	(1-508-1, -2) To junction of R105, R106 (1-510-1, -2) To terminal 5 of T52	To junction of two 100M Resistors in series from: (1-508-1, -2) pin 5 to pin 7 of V10-6AL5 (1-510-1, -2) pin 5 to pin 7 of V9-6AL5	T52 Sec. (Top Core)	Zero	Use lowest meter scale set to zero center. At correct setting, a slight turn of core will give either a positive or negative reading
	Remove test equipment and resistors					

SYLVANIA DIAGRAM FOR 1-508-1 AND 1-508-2 TV CHASSIS

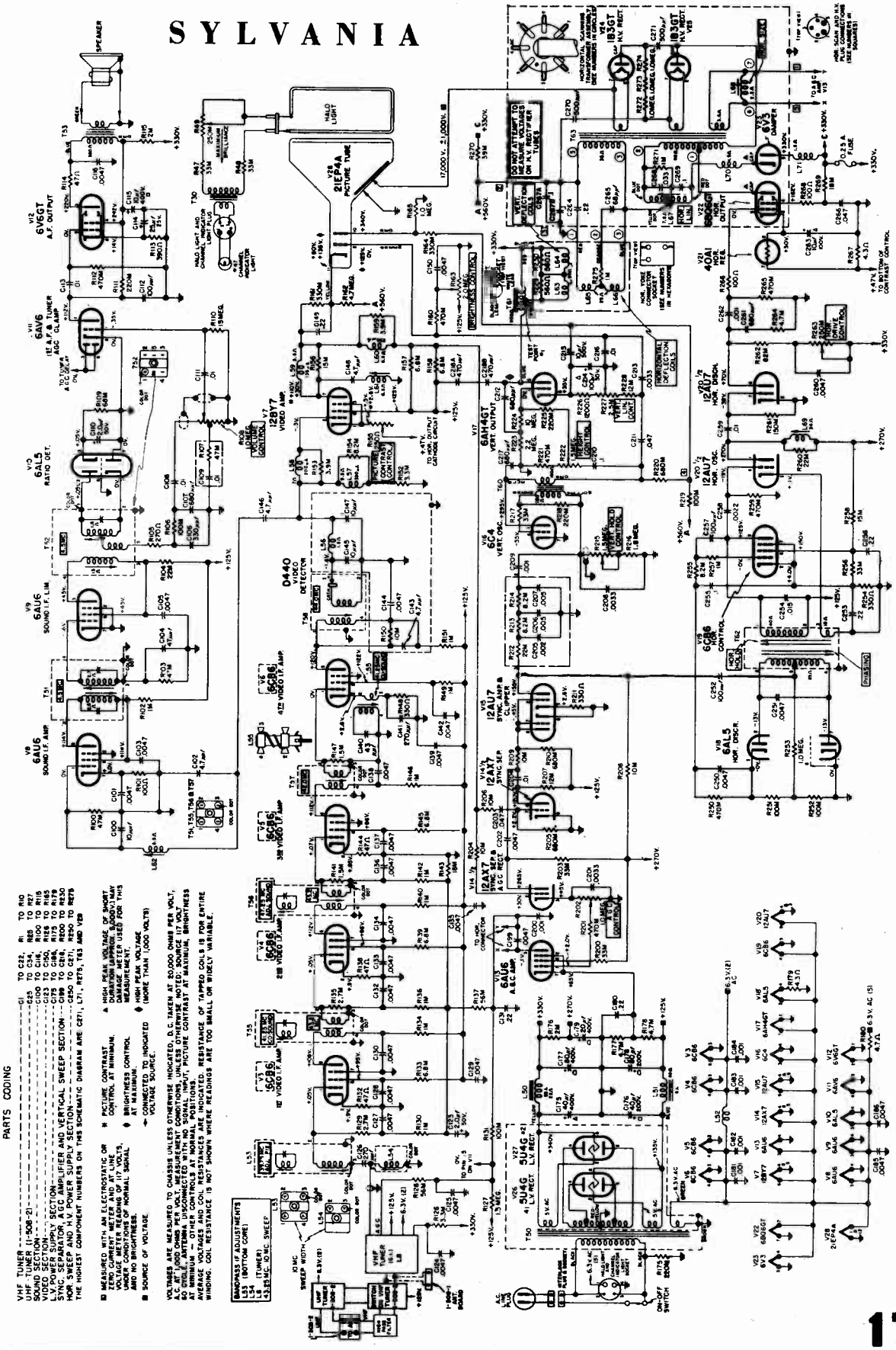

SYLVANIA DIAGRAM FOR 1-510-1 AND 1-510-2 TV CHASSIS

PARTS CODING

VHF TUNER SECTION — C1 TO C24, R1 TO R11
UHF TUNER SECTION — C26 TO C39, R26 TO R29
SOUND SECTION — C100 TO C114, R100 TO R113
VIDEO SECTION — C125 TO C152, R126 TO R159
L.V. POWER SUPPLY SECTION — C175 TO C180, R175 AND R176
SYNC. SEPARATOR AND VERTICAL SWEEP SECTION — C200 TO C215, R200 TO R227
HOR. SWEEP AND H.V. POWER SUPPLY SECTION — C250 TO C267, R250 TO R268
THE HIGHEST COMPONENT NUMBERS ON THIS SCHEMATIC DIAGRAM ARE. C267, L71, R268, T61 AND V23

⊠ MEASURED WITH AN ELECTROSTATIC OR ZERO CURRENT METER AND AT LINE VOLTAGE METER READING OF 117 VOLTS, UNDER CONDITIONS OF NORMAL SIGNAL AND NO BRIGHTNESS.

■ SOURCE OF VOLTAGE.

* PICTURE CONTRAST CONTROL AT MINIMUM.

♦ BRIGHTNESS CONTROL AT MAXIMUM.

→ CONNECTED TO INDICATED VOLTAGE SOURCE

▲ HIGH PEAK VOLTAGE OF SHORT DURATION (APPROX. 5,000V.) MAY DAMAGE METER USED FOR THIS MEASUREMENT.

♦ HIGH PEAK VOLTAGE (MORE THAN 1000 VOLTS)

VOLTAGES ARE MEASURED TO CHASSIS UNLESS OTHERWISE INDICATED, D.C. TAKEN AT 20,000 OHMS PER VOLT, A.C. AT 1,000 OHMS PER VOLT. MEASUREMENT CONDITIONS, UNLESS OTHERWISE NOTED SOURCE 117 VOLT 60 CYCLE, ANTENNA DISCONNECTED WITH NO SIGNAL INPUT, PICTURE CONTRAST AT MAXIMUM, BRIGHTNESS AT MINIMUM — OTHER CONTROLS AT NORMAL POSITIONS.
AVERAGE VOLTAGES AND COIL RESISTANCES ARE INDICATED RESISTANCE OF TAPPED COILS IS FOR ENTIRE WINDING. COIL RESISTANCE IS NOT SHOWN WHERE READINGS ARE TOO SMALL OR WIDELY VARIABLE.

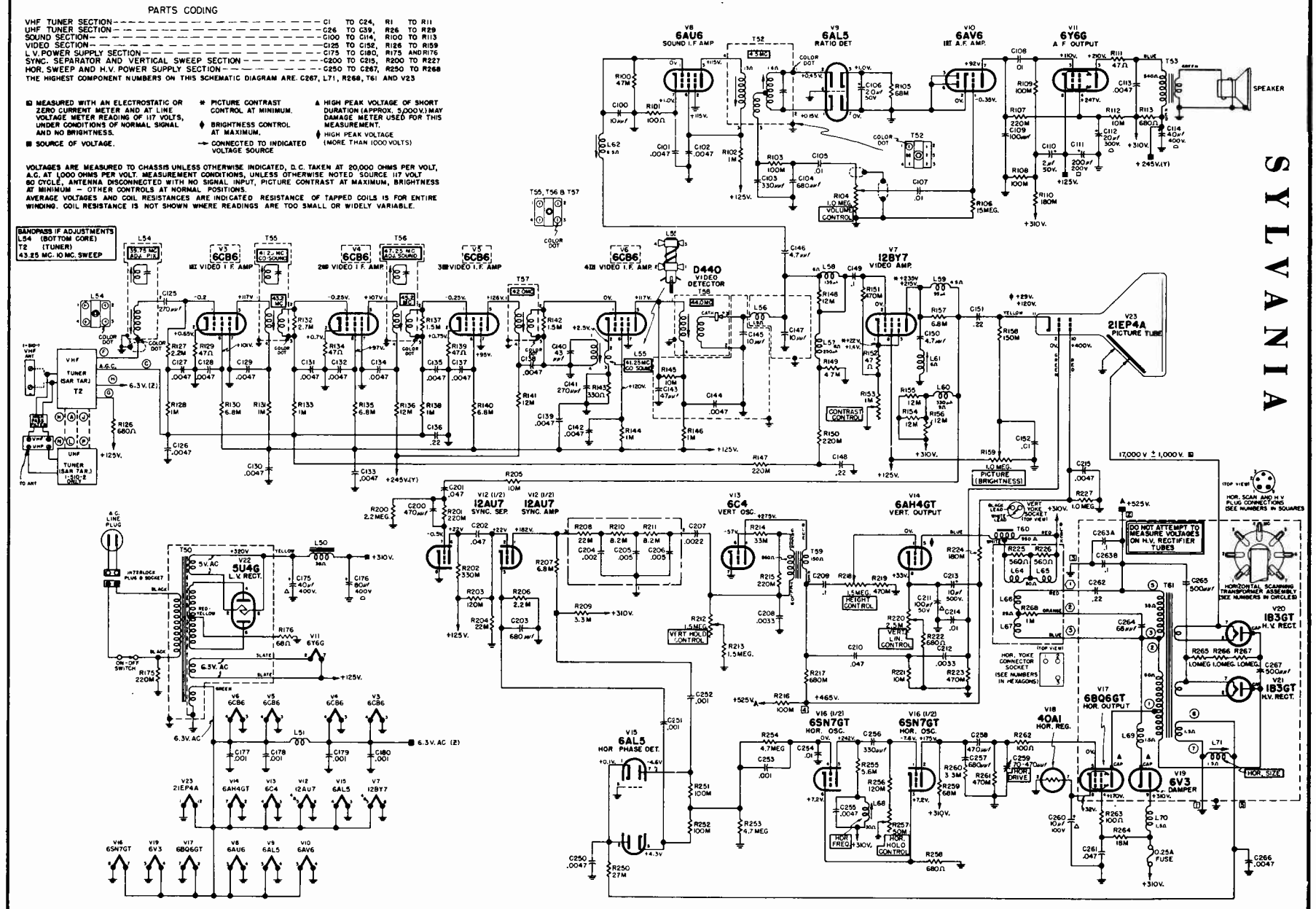

SYLVANIA REVISIONS AND CODE CHANGES TO CHASSIS 1-508-1, -2, 1-510-1, -2 AS NOTED

CHASSIS 1-508-1 C01, C02, C03 AND 1-508-2

Reduction of sound interference in the picture is accomplished under code change C01 on chassis 1-508-1 and in original production of chassis 1-508-2 by connecting pin 6 of V11, the 6AV6 1st A. F. Amplifier and Tuner AGC Clamp as indicated in Figure 27.

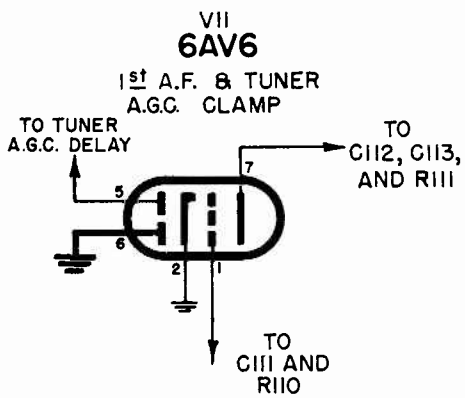

FIGURE 27 - PARTIAL SCHEMATIC DIAGRAM CHASSIS 1-508-1 C01

R215, the Vertical Hold control on chassis 1-508-1 and 1-508-2 is changed from 1.5 megohms to 2.0 megohms, Service Part 153-0018, to increase its range. This revision is coded C02 in chassis 1-508-1 and incorporated in initial production of chassis 1-508-2.

C218A and C218B, 470 Mmfd., 500V. capacitors are combined into C218, a 220 Mmfd., 1000 V. capacitor, Service Part 160-1032 on chassis 1-508-1 and 1-508-2. This revision bears no code change number in either chassis.

CHASSIS 1-510-1 C01, C02, C03, C04 AND 1-510-2

C215, .0047 Mfd., 500 V. ceramic capacitor is changed to a .0047 Mfd., 600 V. paper unit, Service Part 162-06247 in chassis 1-510-1 as C01 and in original production of chassis 1-510-2. The revision provides greater voltage tolerance for this capacitor.

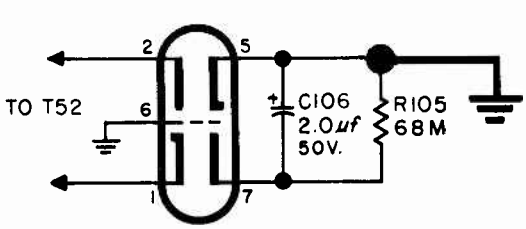

FIGURE 28 - RATIO DETECTOR CIRCUIT CHANGE CHASSIS 1-510-1 C02

The following revisions constitute code change C02 in chassis 1-510-1. These revisions will be included in initial production of chassis 1-510-2.

1. C106, 2 Mfd. capacitor and R105, 68M ohm resistor are now connected as in Figure 28 to prevent possible sound interference in the picture at high volume levels.
2. The ventilation of R176, 68 ohm resistor (75 ohms in certain initially produced chassis) is improved by physically relocating both this resistor and C136, .22 Mfd. capacitor.
3. R255, 5,600 ohm resistor has been physically relocated as a factory change.

Sensitivity in chassis 1-510-1 and 1-510-2 is increased by the following component changes. These changes constitute code C03 in chassis 1-510-1 and are incorporated in initial production of chassis 1-510-2.

1. R126 - 680 ohm resistor is removed.
2. R130, R135 and R140 are changed from 6,800 ohms to 4,700 ohms Service Part 181-0472.
3. R136 and R141 are changed from 12,000 ohms to 6,800 ohms, Service Part 183-0682.

A factory revision under code change C03 also eliminates C215 - .0047, 600 V. capacitor, previously added by code change C01.

Code change C04 in Chassis 1-510-1 and initial production of chassis 1-510-2 includes the following changes.

1. R222 has been changed from 680 ohms to 1000 ohms, Service Part 182-0102 to improve the range of R220, the Vertical Linearity control.
2. The stability of the horizontal oscillator has been improved by changing R258 from 680 ohms to 820 ohms, Service Part 181-0821.

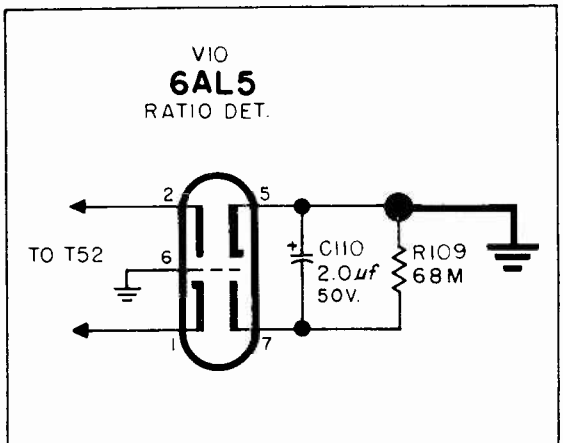

FIGURE 29 - PARTIAL SCHEMATIC CHASSIS 1-508-1 C04

SYLVANIA Revisions and Code Changes to Chassis 1-508-1, -2, 1-510-1, -2, continued.

CHASSIS 1-508-1 C04, C05 & 1-508-2 C00

C110, 2 Mfd. capacitor and R109, 68M ohm resistor are now connected as shown in Figure 29 to eliminate a 4.5 Mc. harmonic interference in the picture. This revision is coded C04 in the 1-508-1 chassis, and is included in initial production of chassis 1-508-2.

Code change C05 for chassis 1-508-1 adds a shield that extends over the 3rd and 4th Video IF Amplifier tube sockets on the underside of the chassis in addition to the existing Video Detector circuit shield. Original production of chassis 1-508-2 incorporates this change.

CHASSIS 1-510-1 C05 & 1-510-2 C00

A shield over the 3rd and 4th Video IF Amplifier tube sockets on the underside of the chassis has been added to the 1-510-1 chassis. Used in addition to an existing shield over the Video Detector circuits, this change is coded C05. Initial production of chassis 1-510-2 will include this change.

CHASSIS 1-508-1 C06 & 1-508-2 C01

Code change C06 for TV chassis 1-508-1 and code change C01 for chassis 1-508-2 revise the circuits of V14 12AX7 - the Sync Separator & AGC Rectifier, and V15 12AU7 - the Sync Amplifier & Clipper. The change, in effect, adds a "noise gate" action between the sync take-off circuit and the sync separator circuit, and functions to stabilize vertical and horizontal sync and AGC operation under interference conditions.

Component changes are as follows:

1. C203 - .047 Mfd. capacitor is changed from a 200 volt to a 400 volt capacitor.
2. R208 - 10M ohm resistor is changed to a 15M ohm resistor.
3. R199 - 33M ohm resistor is added and connected in parallel with R208.

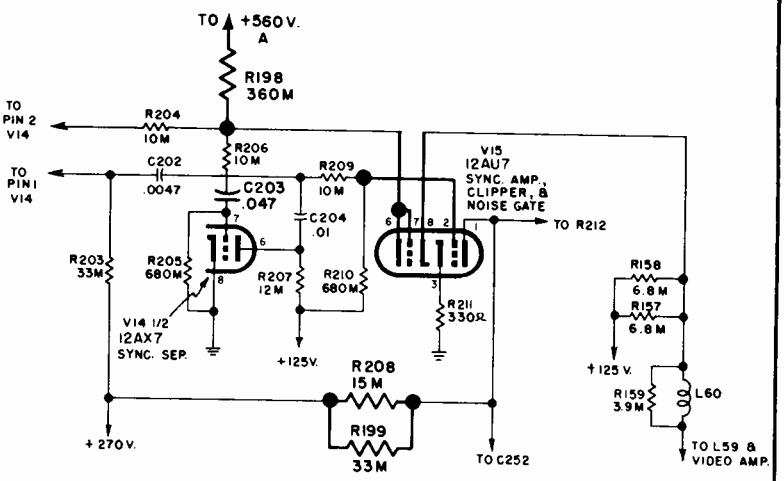

FIGURE 30 - PARTIAL SCHEMATIC OF CHASSIS 1-508-1 C06, 1-508-2 C01

4. R198 - 360M ohm resistor is added and connected between +560 volts and V14 and V15 as shown in the partial schematic.

Wiring revisions for these 1-508-1 and 1-508-2 code changes are illustrated in the partial schematic in Figure 30.

CHASSIS 1-510-1 C06

Code change C06 for TV chassis 1-510-1 changes the values of the following components in the sync separator circuit to improve sync stability.

1. C200 - 470 Mmfd. capacitor is changed to a 220 Mmfd. capacitor.
2. C201 - .047 Mfd. capacitor is replaced by a .01 Mfd. capacitor.
3. R200 - 2.2 Megohm resistor is replaced by a 470M resistor.
4. R201 - 220M resistor is changed to a 470M resistor.

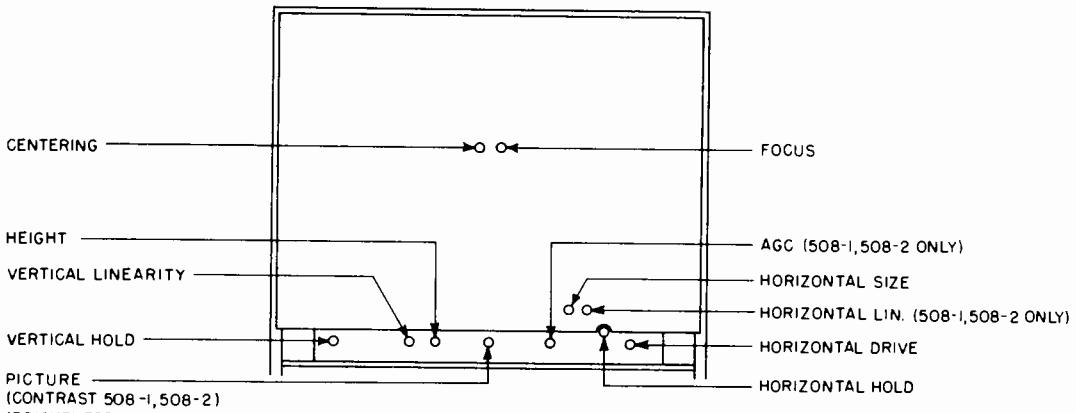

REAR CHASSIS CONTROLS

TRAV-LER RADIO CORPORATION

Chassis 36A2 used in Models 217-32, 217-33, 217-37, 220-34, 220-35, 221-36.

At the time of publication Chassis 36B2 was planned to be used in new Models 217-331 and 217-371, and using electromagnetic focusing. In the main, the material on these pages for 36A2 will apply to 36B2.

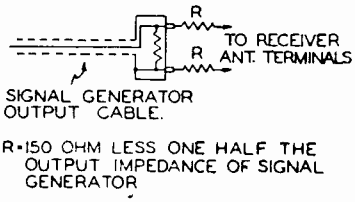

FIG. 3. Dummy Antenna Detail

FOCUS—Focusing on low voltage electrostatic focus picture tubes is controlled by the primary B+ in the receiver. In order to compensate for variations among the picture tubes, a focus control is used in the circuit. Although this control varies the voltage to the focusing electrode of the picture tube by 300 VDC, the visible change may appear slight and will require a careful adjustment. With the ion trap properly adjusted, and the picture properly centered, there should be no necessity to adjust this control. Should any change in focus be found necessary, the ion trap may be re-touched slightly to obtain the desired result.

ALIGNMENT INSTRUCTIONS (Continued on the page after the circuit diagram).

Refer to Fig. 8 for location of alignment adjustments. Refer to the schematic for location of the test points indicated by the circled letters in the following chart.

PRESETTING IF TRAP COILS USING AM SIGNAL GENERATOR AND VTVM

Connect the negative lead of a 3-volt battery at point (B) shown on the schematic diagram; connect the positive lead to the chassis. Connect the signal generator to the grid of the 1st IF tube. Connect the DC probe of the VTVM at point (A); connect the negative lead to the chassis. Set the picture and fine tuning controls fully clockwise. Set the receiver to channel 13.

DUMMY ANTENNA	SIGNAL GENERATOR COUPLING	SIGNAL GENERATOR FREQUENCY	CHANNEL	CONNECT VTVM	ADJUST	REMARKS
Direct	To 1st IF grid	20.6 Mc (Unmod.)	13	DC probe to point (A). Common to chassis.	Bottom adjustments of L-42B and L-42C.	Adjust for maximum voltage at VTVM.

OVERALL IF AMP. RESPONSE CHECK

Connect the synchronized sweep voltage from the sweep signal generator to the horizontal input of the oscilloscope for horizontal deflection. Connect the sweep generator to the loosely coupled shield of the 6J6 tube, making certain that the shield is not grounded; connect the ground lead to the chassis.

DUMMY ANTENNA	SWEEP GENERATOR COUPLING	SWEEP GENERATOR FREQUENCY	MARKER GENERATOR FREQUENCY	CHANNEL	CONNECT SCOPE	ADJUST	REMARKS
Direct	High side to loosely coupled shield of 6J6; low side to chassis.	24 Mc (10 Mc sweep)	21.75 Mc 26.25 Mc	13	Vertical amplifier to point (A). Common to chassis.	L-13A L-42B (top) L-42C (top) L-6 L-38	Check for response curve similar to Fig. 5 with markers as shown. It is generally necessary to retouch settings of L-13A, L-42B (top), and L-42C (top) for proper response. Note that the adjustment of L-13A will affect the video side of the curve, L-42B (top) the audio side, and L-42C (top) the intermediate range. It may be necessary to touch up settings of L-6 and L-38 for proper symmery, flatness, and bandpass. A pass band width of 3.5 Mc measured at the 50% response points is recommended at this point.

SOUND IF AMP ALIGNMENT USING AM SIGNAL GENERATOR AND VTVM

DUMMY ANTENNA	SIGNAL GENERATOR COUPLING	SIGNAL GENERATOR FREQUENCY	CHANNEL	CONNECT VTVM	ADJUST	REMARKS
Direct	High side to point (A). Low side to chassis.	4.5 Mc (Unmod.)	Any channel unused locally.	Dc probe to point (C). Common to chassis.	L-16A and bottom adjustment of L-17.	Adjust for max. voltage at VTVM.
"	"	"	"	DC probe to point (E). Common to chassis.	Adjust top slug of L-17.	Adjust for zero voltage. A positive and negative reading will be obtained either side of the correct setting.

FIG. 9. Schematic Diagram (Chassis 36A2)

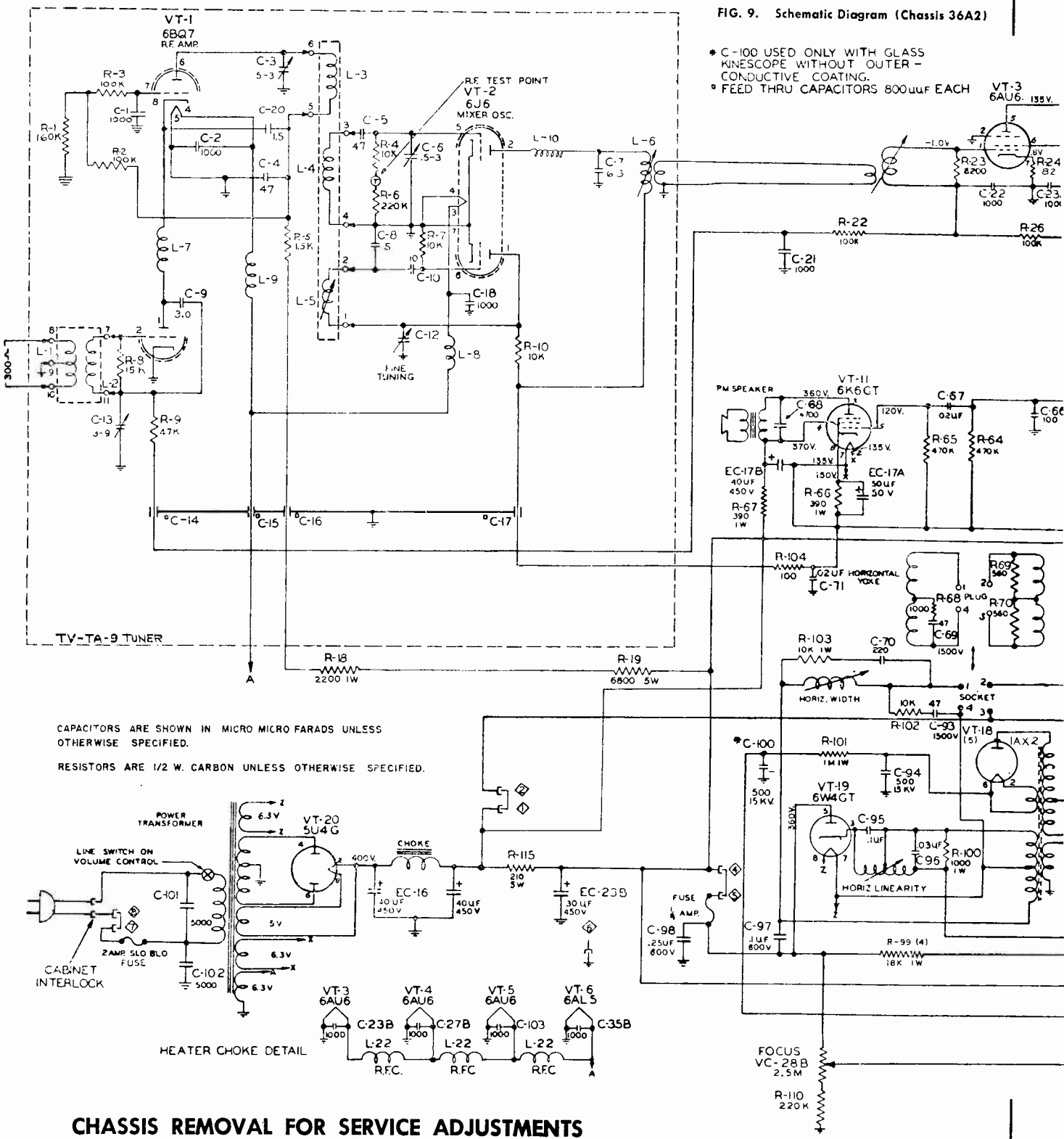

CHASSIS REMOVAL FOR SERVICE ADJUSTMENTS

1. Disconnect the cabinet antenna or outside antenna leads from the cabinet antenna terminals.
2. Remove rear cabinet cover. Note that the line cord inter-lock connector is part of the rear cover and disconnects power to the chassis when this cover is removed. A substitute line cord must be provided if the receiver must be turned on for service adjustments.
3. Disconnect the speaker.
4. Remove the wood screws holding the antenna terminal strip bracket to the cabinet.
5. Remove the front panel control knobs.
6. Remove four chassis bolts holding chassis to cabinet and slide chassis out rear of cabinet.

Trav-ler Radio Corp. Chassis 36A2 Circuit Diagram

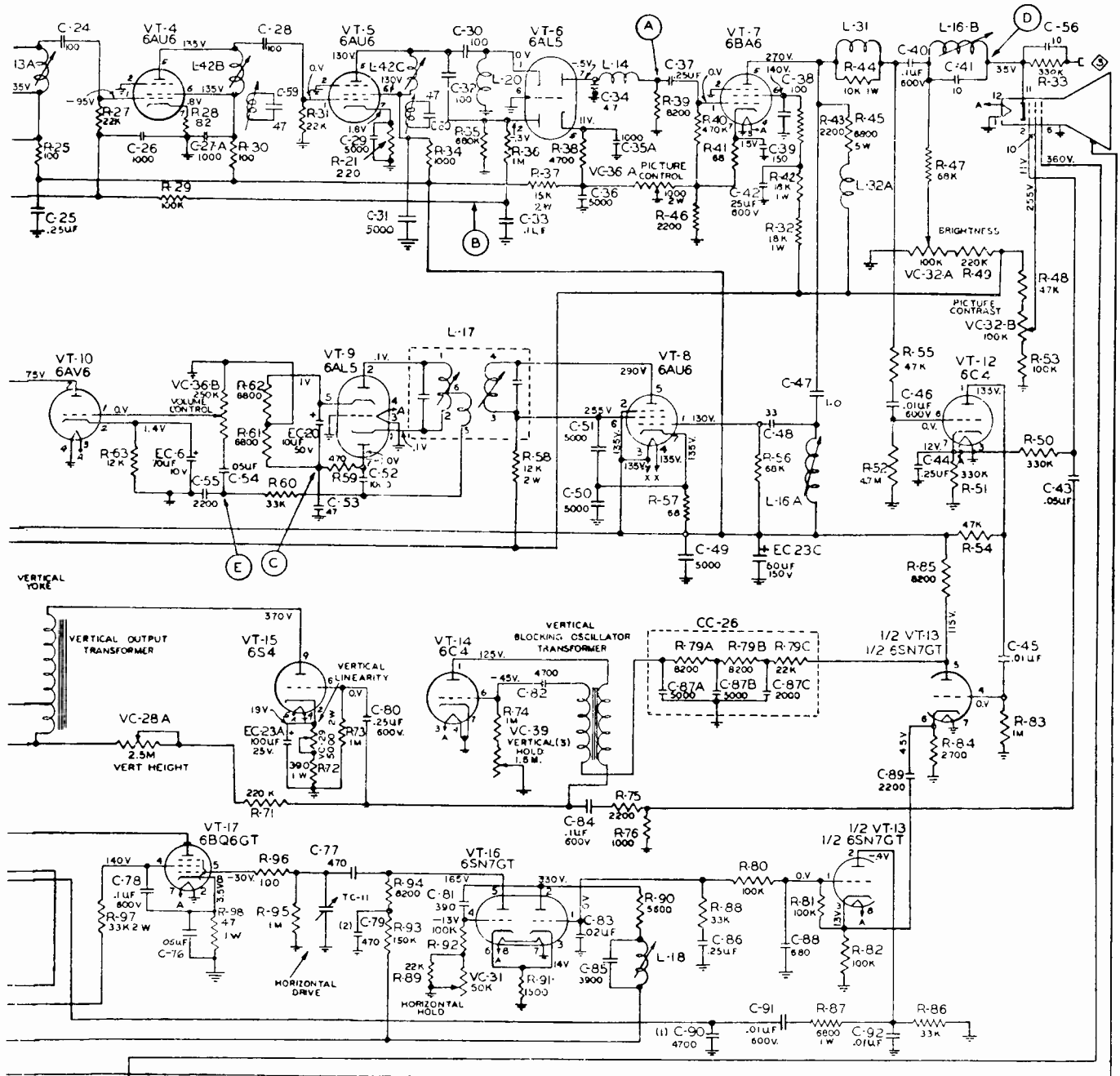

TELEVISION CHASSIS 36A2
110-125V.60 CYCLES A.C.ONLY.

TRAV-LER RADIO CORP.

PRODUCTION CHANGES :
(1) C-90 = 2200 in early models.
(2) C-79 = 680 in early models.
(3) Vertical hold = 1 Meg. in early models VC-39 was VC-30
(4) R-39 Added in later models.
(5) Early models used a 1X2A with a 3.3 ohm. filament ballast.

Power Supply ..... 110-125 V. 60 cycles AC
Power Consumption ..... 185 Watts
Tuning Range ..... TV channels 2 thru 13
IF Amplifier Response—
Picture carrier ..... 26.25 Mc
Sound carrier ..... 21.75 Mc
Intercarrier sound ..... 4.5 Mc
IF Traps ..... 20.6 Mc
Model Differences—
Model 217-32, 217-33 ..... Picture tube 17HP4
Model 220-35 ..... Picture tube 20HP4-A
Model 221-36 ..... Picture tube 21FP4-A

1. LINE VOLTAGE 117 V. A.C. ALL VOLTAGES D.C.
2. ALL VOLTAGES MEASURED TO CHASSIS AND ARE POSITIVE UNLESS OTHERWISE SPECIFIED.
3. VOLTAGE READINGS TAKEN WITH ZERO SIGNAL INPUT AND PICTURE CONTROL SET MAX. CLOCKWISE. ALL OTHER CONTROLS SET FOR NORMAL OPERATION.
4. VOLTAGE READINGS TAKEN WITH AN ELECTRONIC VOLTMETER. L-38

Trav-ler Radio Corp. Chassis 36A2, Alignment continued

CHECK ON SOUND IF AMP ALIGNMENT USING FM SIGNAL GENERATOR AND OSCILLOSCOPE

Connect the synchronized sweep voltage from the signal generator to the horizontal input of the oscilloscope for horizontal deflection.

DUMMY ANTENNA	SWEEP GENERATOR COUPLING	SWEEP GENERATOR FREQUENCY	MARKER GENERATOR FREQUENCY	CHANNEL	CONNECT SCOPE	ADJUST	REMARKS
Direct	High side to point (A). Low side to chassis.	4.5 Mc (500 Kc sweep)	4.45 Mc 4.5 Mc 4.55 Mc	Any channel unused locally.	Vertical amplifier input to point (C). Common to chassis.	L-17	Touch up the adjustments of L-17 maintaining max. amplitude while adjusting for max. steepness and straightness of the slope. See Fig. 6. Note that the 4.5 Mc marker pip tends to disappear as the correct setting of the top adjustment of L-17 is reached.

4.5 MC TRAP ADJUSTMENT

DUMMY ANTENNA	SIGNAL GENERATOR COUPLING	SIGNAL GENERATOR FREQUENCY	CHANNEL	CONNECT VTVM	ADJUST	REMARKS
Direct	High side to point (A). Low side to chassis.	4.5 Mc (Unmod.)	Any channel unused locally.	AC probe to cathode of picture tube. Test point (D). Common to	L-16B	Adjust for minimum voltage. A crystal detector shown in Fig. 4 may be used with the VTVM in place of a commercial AC probe if desired.

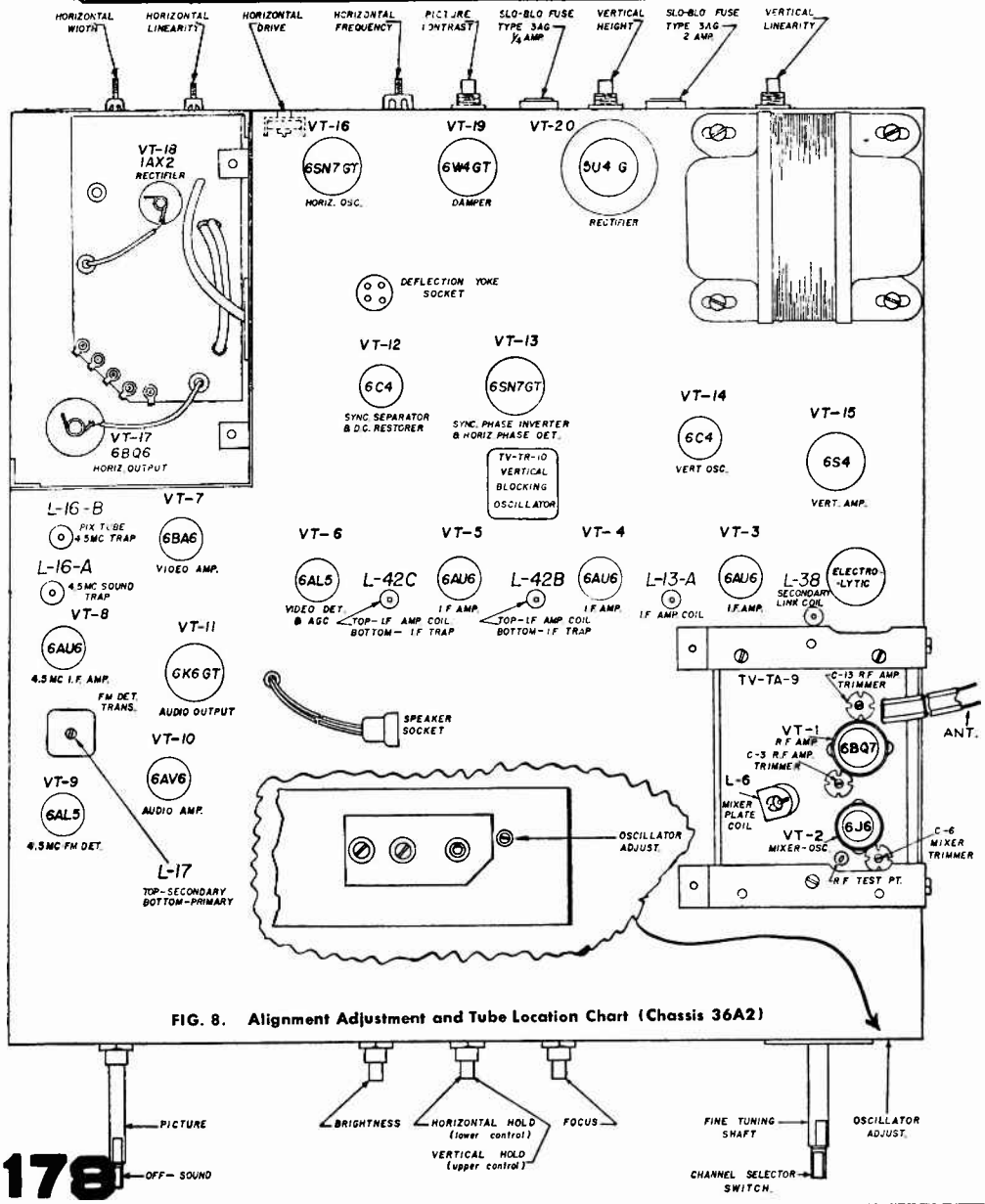

FIG. 8. Alignment Adjustment and Tube Location Chart (Chassis 36A2)

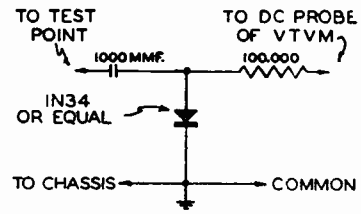

FIG. 4. Diode Detector Detail

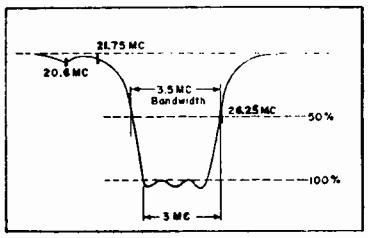

FIG. 5. IF Response Curve

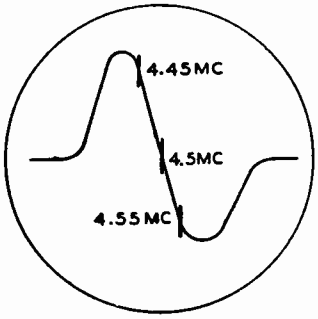

FIG. 6. Audio Response Curve

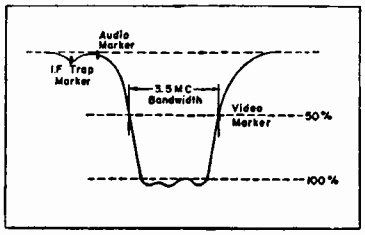

FIG 7. Overall RF Response Curve

Westinghouse
TELEVISION

FOR LIST OF CHASSIS AND MODELS COVERED
SEE TABULATION-INDEX BELOW

Practically all Westinghouse TV sets produced during the past year are covered with the service material on the next six pages. You must use the tabular index below to find material needed for any specific set. Since two or even three different chassis were used in some of the models, it will be best to look up material by chassis number. The circuit diagrams are exact for sets stated and, in case of others, minor differences are pointed out. Diagrams of all tuners used are printed.

Chassis	Models using this chassis	Tuner No.	Where to look for information:
V-2207-1	H-706T16	V-11385-1	Page 180 circuit, page 181 tuner
V-2214-1	H-689T16	V-10880-1	Same as V-2216-1 but uses 16AEP4
V-2215-1	H-681T17(V-2215-2, -3 also used)	V-10880-1	Same as V-2216-1 but uses 17HP4
V-2216-1	H-667T17, H-668T17, H-678K17, H-679K17	V-10880-1	Page 182 circuit, page 183 tuner
V-2216-2	H-699K17, H-700T17, H-701T17, H-702K17, H-703K17, H-704T17, H-705K17	V-10880-1	Exactly like V-2216-1 except for cabinet parts and speaker
V-2216-3	Models as under V-2216-2	V-11333-1	Same as V-2216-1 except for tuner
V-2216-4 (V-2216-5)	H-704T17, H-714K21, H-715K21, H-720K21, H-721K21, H-722K21, H-754K21	V-11333-1	See page 183 for tuner circuit and differences in Sound-IF-Audio. Like V-2216-1 in other respects
V-2217-1	H-673K21, H-676T21, H-690K21, H-691K21	V-10880-1	Same as V-2216-1 but uses 21FP4A + 30 mfd. in parallel with C502, etc.
V-2217-2	H-692T21, H-695K21, H-710T21, H-711T21, H-713K21, H-714K21, H-715K21, H-720K21, H-721K21, H-722K21	V-10880-1	Same as V-2216-1, see pages 182 and 183, but uses 21FP4A picture tube, T501 is V-9958-2, and differences in other tubes and parts
V-2217-3	Models under V-2217-2	V-11333-1	Same as V-2216-1 except for tuner
V-2217-4	H-710T21, H-711T21, H-714K21, H-715K21, H-720K21, H-721K21, H-722K21, H-754K21	V-11333-1	Same as V-2216-4, but uses 21FP4A picture tube and different yoke items
V-2217-5	H-710T21, H-711T21, H-723K21, H-754K21	V-11333-1	See note under V-2216-4, also some differences in tubes and parts
V-2218-1	H-730C21, H-732C21, H-733C21	V-10880-1	Combination, basically like V-2216-2
V-2218-11	Models as under V-2218-1	V-11333-1	As V-2218-1, but different tuner, etc
V-2219-1	H-688K24	V-10880-1	As V-2218-1, 24" tube + other diff.
V-2220-1	H-708T20	V-11385-1	Page 180 circuit, page 181 tuner
V-2220-2	H-718K20, H-724T20, H-725T20	V-11485-1	Electrically the same as V-2220-11
V-2220-3	H-708T20	V-11485-1	Like V-2220-11 with diff. in sync cir
V-2220-4	H-718K20, H-724T20, H-725T20,	V-11485-1	As V-2220-3, except shafts shorter
V-2220-11	H-708T20	V-11485-1	Like V-2220-1 except for differences explained on page 181.

Westinghouse Circuit of Chassis V-2207-1 and V-2220-1

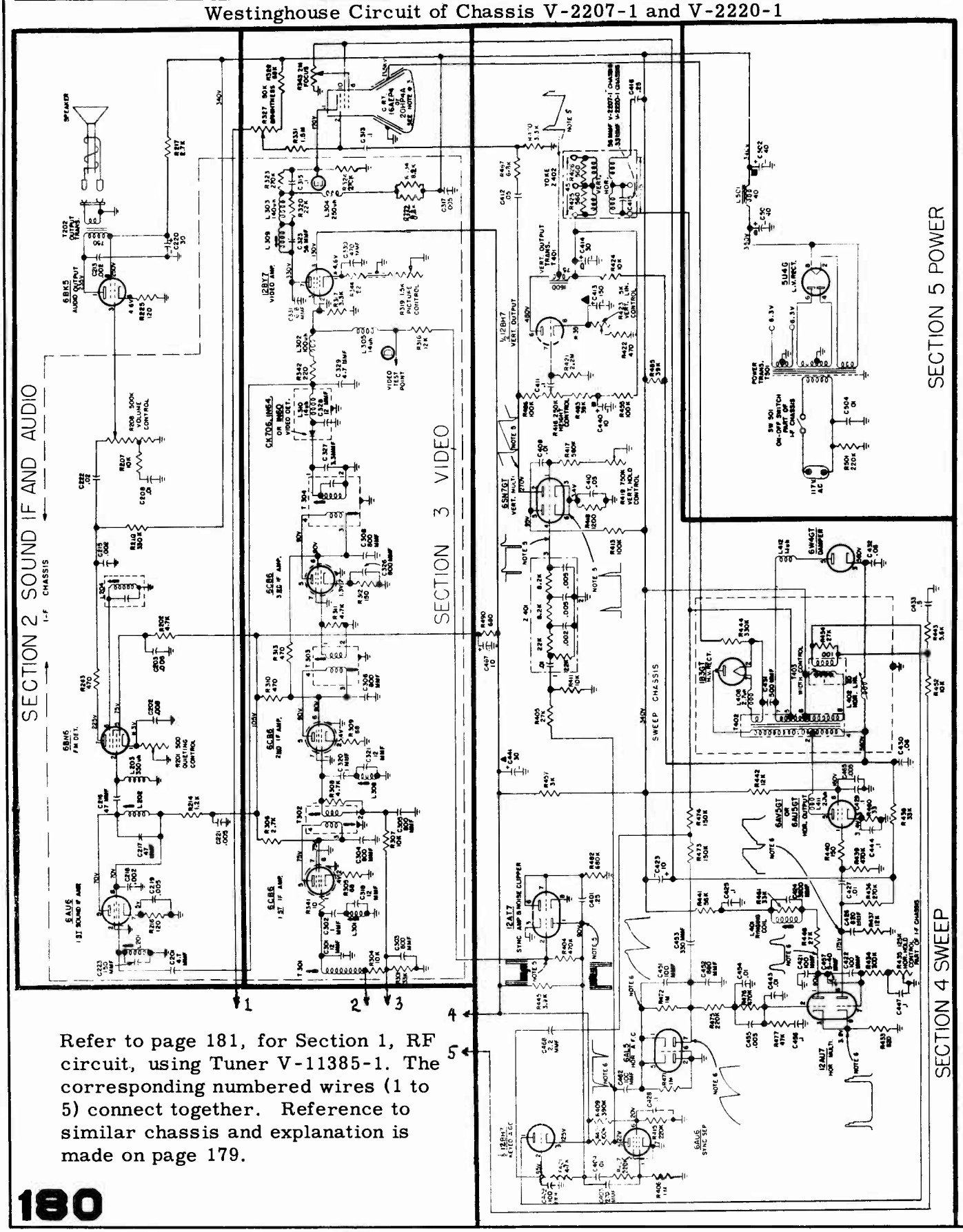

Refer to page 181, for Section 1, RF circuit, using Tuner V-11385-1. The corresponding numbered wires (1 to 5) connect together. Reference to similar chassis and explanation is made on page 179.

Westinghouse RF Tuners V-11385-1, V-11485-1, and other information

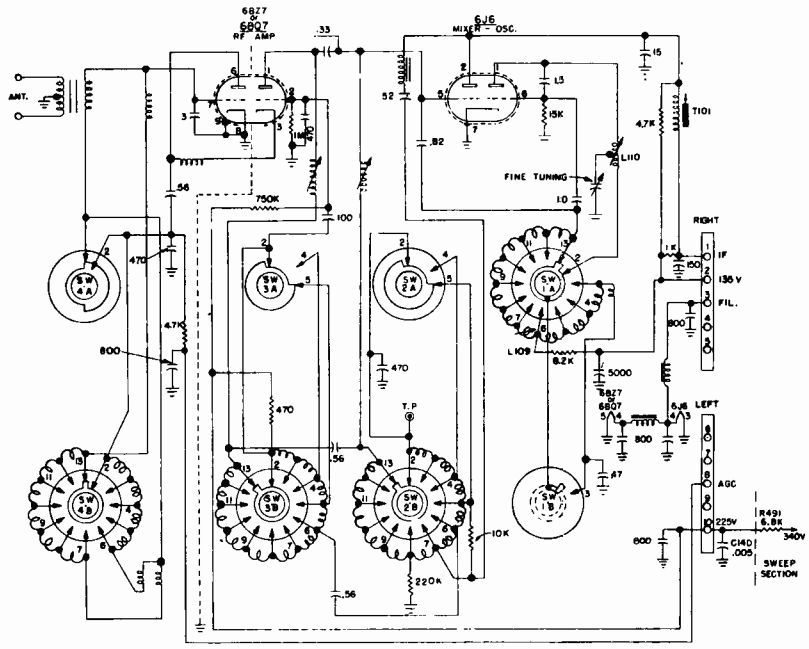

V-11485-1 RF TUNER USED IN V-2220-11 CHASSIS ASSEMBLY

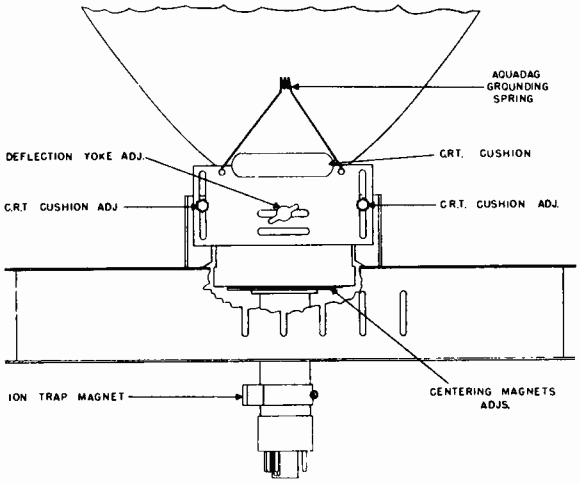

FIG. 1 — CRT ADJUSTMENTS

To accommodate the new tuner, a 6800 ohm 2 watt resistor (R491) is connected between the 340 volt line and terminal #10 of the tuner to provide 225 volts at terminal #10, and a .005 mfd capacitor (C140) is added between terminal #10 and ground. In addition, C301 in the grid circuit of the 1st IF stage is changed to 3.3 mmf, the trap coupling capacitor (C302) is changed to 0.47 mmf, and the part number of T301 is changed.

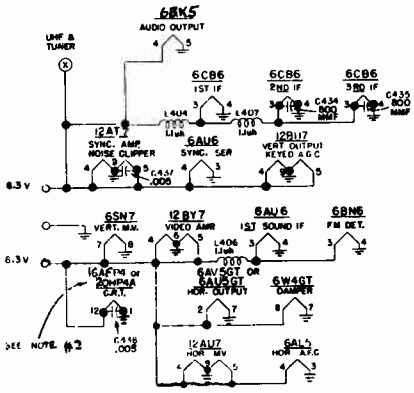

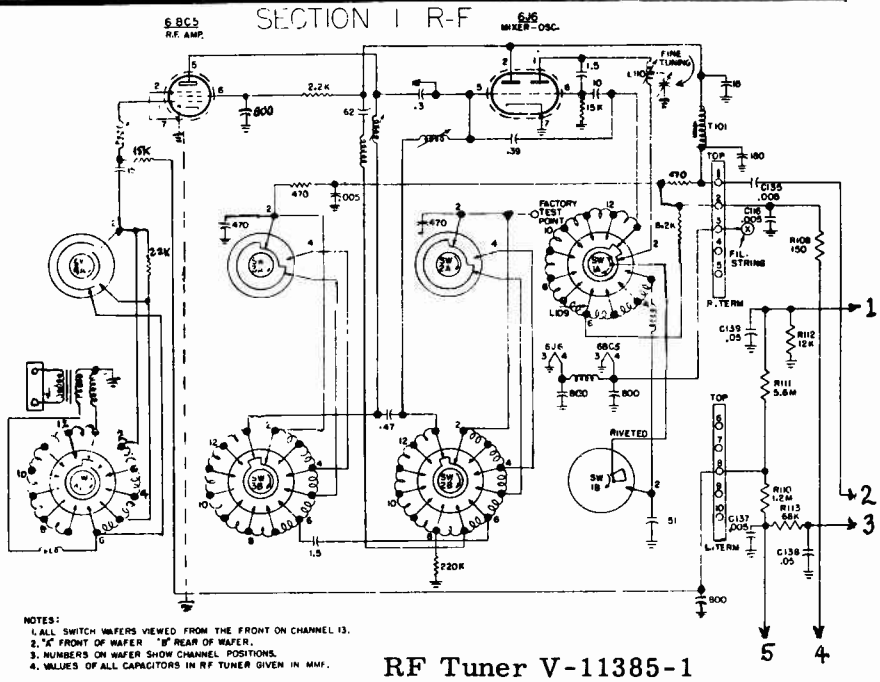

RF Tuner V-11385-1

NOTES:

1. ALL CAPACITANCE VALUES IN MFD AND ALL RESISTANCE VALUES IN OHMS UNLESS OTHERWISE SPECIFIED.
2. IN EARLY PRODUCTION CHASSIS A FEW COMPONENTS WERE OF SLIGHTLY DIFFERENT VALUE THAN SHOWN REPLACEMENT PARTS SHOULD BE OF VALUES SHOWN.
3. V-2207-1 CHASSIS USES A 16AEP4 C.R.T. AND V-2220-1 CHASSIS USES A 20HP4A C.R.T.
4. ALL VOLTAGES MEASURED FROM CHASSIS (GND.) USING A 20,000 OHM/VOLT METER. LINE VOLTAGE 117 V.A.C. READINGS SHOULD BE AS SHOWN ± 20 PER CENT.
5. 60 C.P.S. PULSE REPETITION RATE.
6. 15,750 C.P.S. PULSE REPETITION RATE.

* VOLTAGE MEASURED WITH CONTROL SET AT MAXIMUM RESISTANCE.

The circuit at the left is a part of the main circuit of V-2207-1, etc. The corresponding numbered wires of both drawings are electrically connected. The separation is made for convenience of printing and does not exist in the physical sense.

Westinghouse Circuit of Chassis V-2216-1, and similar sets.

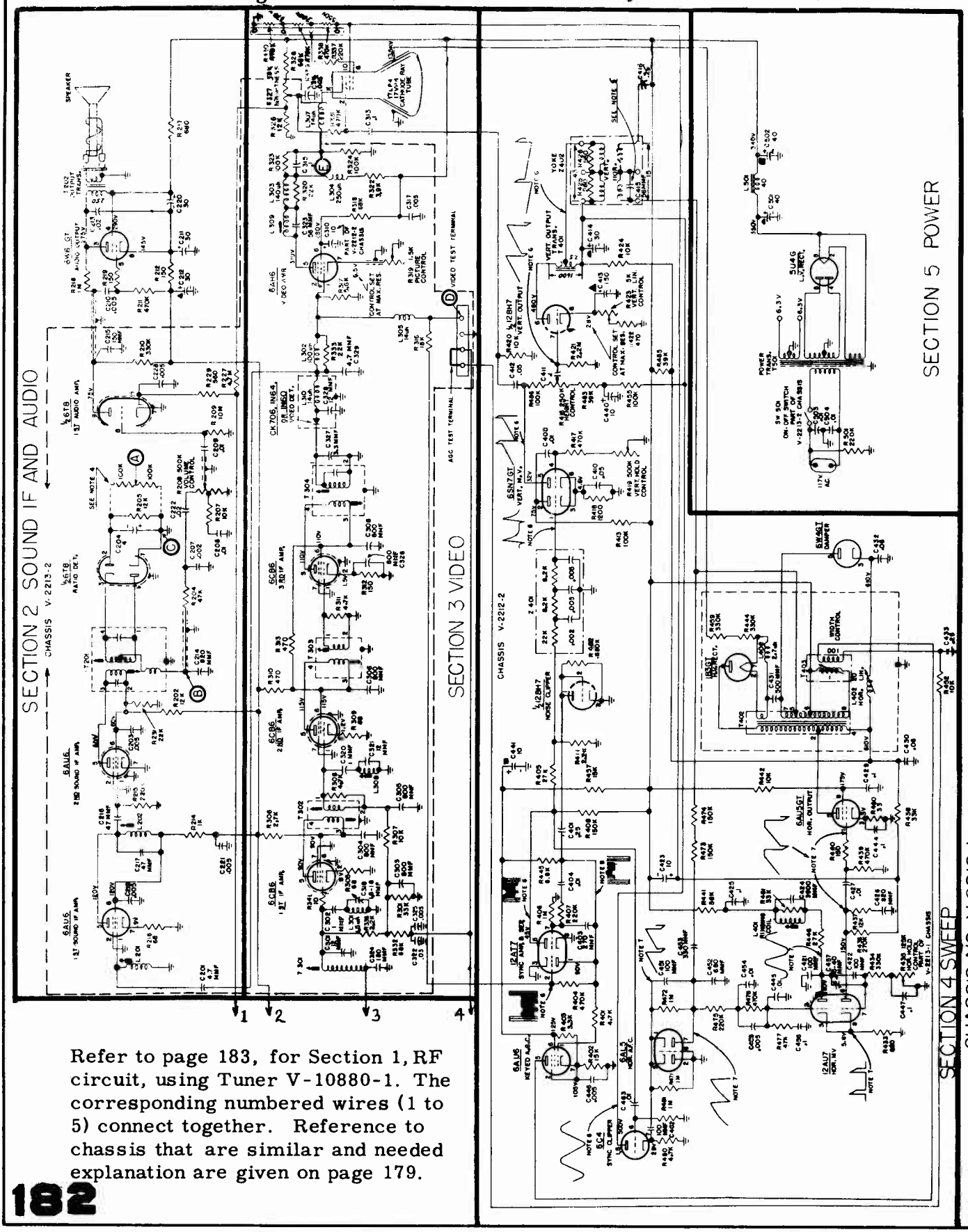

Refer to page 183, for Section 1, RF circuit, using Tuner V-10880-1. The corresponding numbered wires (1 to 5) connect together. Reference to chassis that are similar and needed explanation are given on page 179.

Westinghouse RF Tuners V-10880-1, V-11333-1

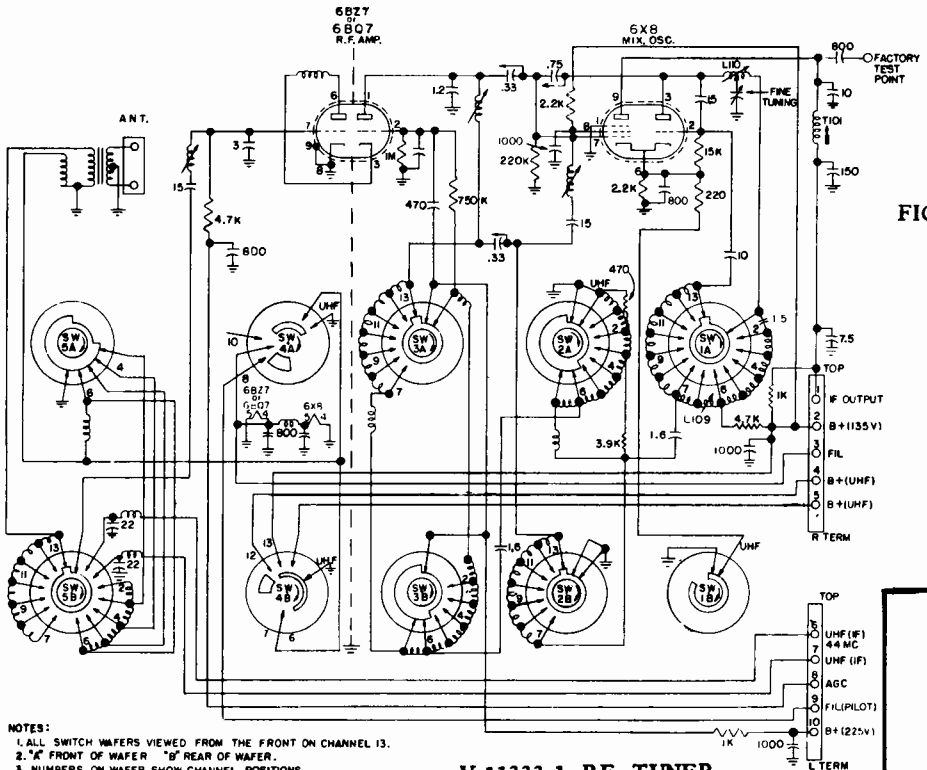

NOTES:
1. ALL SWITCH WAFERS VIEWED FROM THE FRONT ON CHANNEL 13.
2. "A" FRONT OF WAFER "B" REAR OF WAFER.
3. NUMBERS ON WAFER SHOW CHANNEL POSITIONS.
4. VALUES OF ALL CAPACITORS IN RF TUNER GIVEN IN MMF.

V-11333-1 RF TUNER

Terminal #10 of the tuner is connected to a 225 volt source rather than to the UHF socket. To provide the 225 volt source, a 5600 ohm 2 watt resistor (R491) and a 33,000 ohm ½ watt resistor (R495) in parallel are connected between the 310 volt B plus line in the sweep chassis and terminal #10 of the tuner.

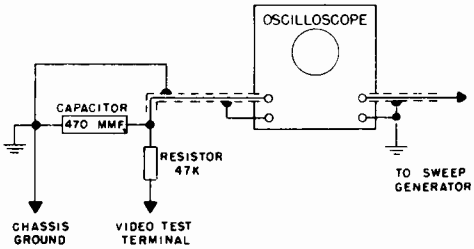

FIG. 2 — OSCILLOSCOPE CONNECTIONS

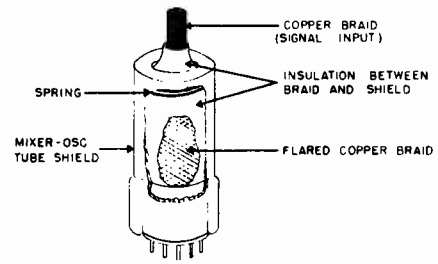

FIG. 3 — COUPLING SIGNAL GENERATOR TO MIXER TUBE

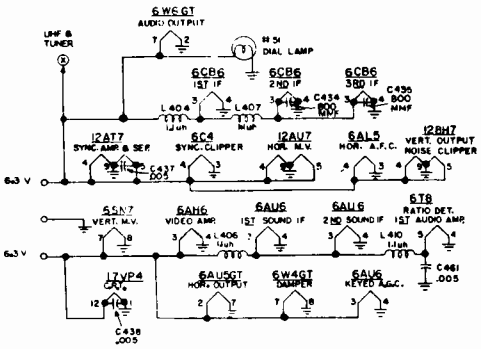

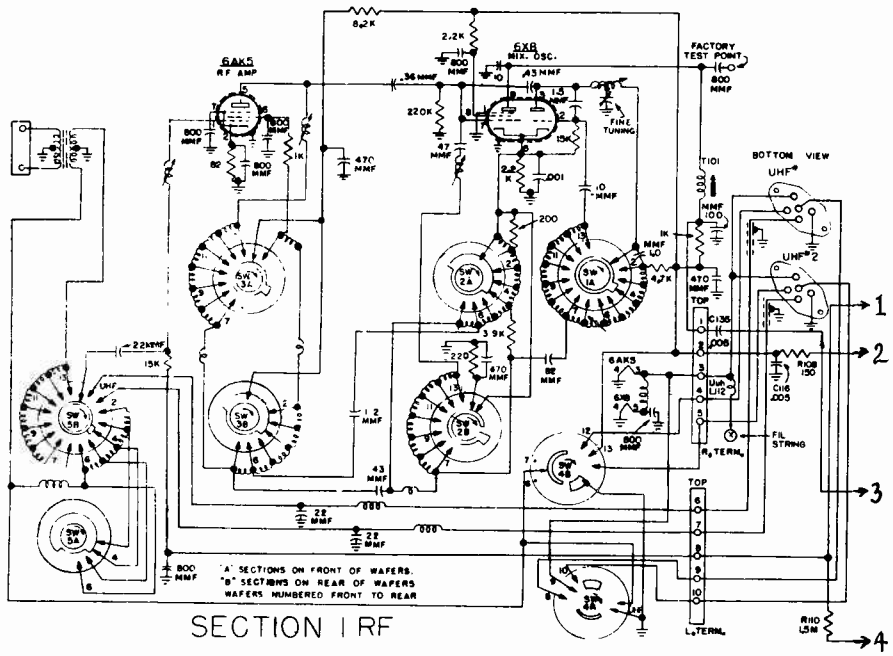

RF Tuner V-10880-1

NOTES:
1. ALL CAPACITANCE VALUES IN MFD AND ALL RESISTANCE VALUES IN OHMS UNLESS OTHERWISE SPECIFIED.
2. IN EARLY PRODUCTION CHASSIS A FEW COMPONENTS WERE OF SLIGHTLY DIFFERENT VALUE THAN SHOWN. REPLACEMENT PARTS SHOULD BE OF VALUES SHOWN.
3. VOLTAGES MEASURED FROM CHASSIS GROUND USING A 20,000 OHM/VOLT METER. LINE VOLTAGE 117 V.A.C. READINGS SHOULD BE AS SHOWN ± 20%.
4. INSTALL TWO 100K RESISTORS IN SERIES (FOR ALIGNMENT ONLY) TO ESTABLISH TEST POINT "A".
5. DEFL. YOKE ASS'Y V-10911-3 HAS A 56 MMF CAPACITOR AND V-10911-4 HAS A 33 MMF CAPACITOR.
6. 60 C.P.S. PULSE REPETITION RATE
7. 15,750 C.P.S. PULSE REPETITION RATE
8. SOCKET CONNECTIONS FOR SUBSTITUTE TUBES ARE SHOWN BELOW ALL OTHER PRESENT SUBSTITUTE TUBES ARE DIRECT REPLACEMENT.

6AC7

The circuit at the left and above are parts of the main circuit of V-2216-1 given on page 182. The corresponding numbered wires of both drawings are connected electrically.

For Sound-IF-Audio section of V-2216-4 see this part of circuit on page 180, balance of V-2216-4 is similar to the circuit on page 182.

Westinghouse Electric, Brief Alignment Information for Sets Covered.
(Some of the sets may have slightly different position of parts or tubes, but in general this material will be applicable to all chassis covered.)

COMMON I-F SECTION

Remove the RF amplifier tube from its socket, and turn the channel selector to channel 13.

Connect the oscilloscope to the video test terminal through the decoupling network shown in Fig. 2.

Connect a 9 volt bias battery to the AGC line.

Adjust the sweep generator for a center frequency of 44 mc. with a 10 mc. sweep deviation, and couple the marker generator to the sweep generator.

Step	*Connect Sweep and Marker Generators to —*	*Marker Use*	*Connect Detuning Clip to —*	*Adjust —*
1.	3rd I-F amp. grid	Check for equal response at 42.25 mc and 45.75 mc using weak signal. Also 43 mc and 45 mc.	2nd I-F amp. plate	Pri. of T304 for max. response and sec. of T304 for symmetrical curve shown in Fig. 5A.
2.	2nd I-F amp. grid	Same as step 1	1st I-F amp. plate	Pri. of T303 for max. response and sec. of T303 for symmetrical curve shown in Fig. 5B.
3.	1st I-F amp. grid	Same as step 1	Not used	Pri. of T302 for max. response and sec. of T302 for symmetrical curve shown in Fig. 5C.
4.	To mixer through coupling device shown in Fig. 3.	Check at 44 mc. Marker pip must be at center of flat region on curve	Not used	Turn L301 adj. completely clockwise and adjust T101 for max. response. Adjust T301 for symmetrical.
5.	Same as preceding step	Adjust to 41.25 mc. and increase output until pip is readily visible.	Not used	L301 to minimize amplitude of 41.25 mc. marker pip.
6.	Same as preceding step	Check curve at frequencies shown on Fig. 5.	Not used	Re-adjust T101 and T301 to obtain curve shown in Fig. 5D.
7.	Tune L308 to 47.25 mc.			

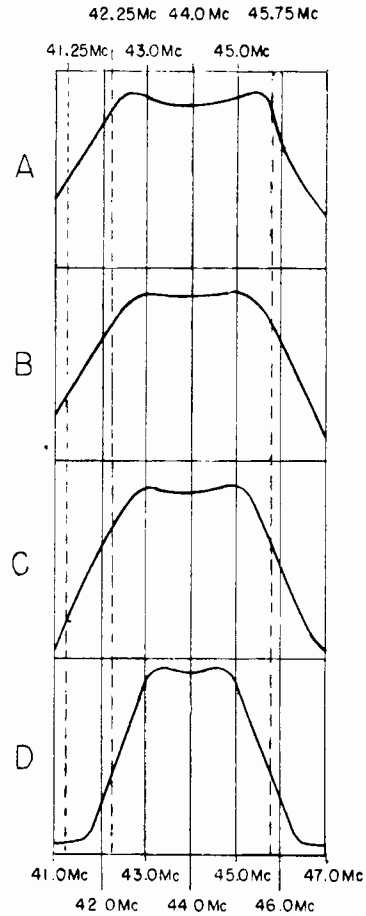

FIG. 5 — RESPONSE CURVES AT VARIOUS STAGES OF ALIGNMENT

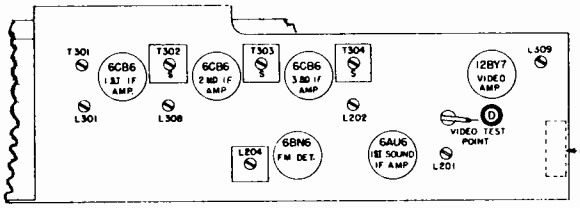

FIG. 4 — TOP VIEW OF CHASSIS

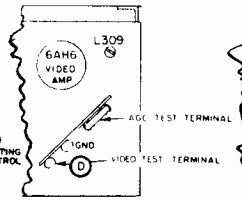

4.5 MC. TRAP

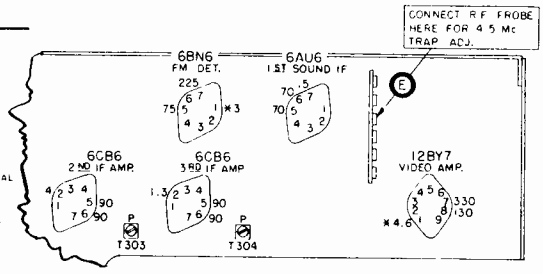

FIG. 6 — BOTTOM VIEW

Connect the signal generator to the video test terminal (point "D" on Fig. 4) through a .001 mfd capacitor.

Step	*Signal Gen. Frequency*	*VTVM Connections*	*Remarks*	*Adjust —*
1.	4.5 mc. unmodulated	RF probe to point "E" (see Fig. 6) and common lead to chassis.	Use strong signal from generator	L309 for minimum voltage

ZENITH RADIO CORPORATION

1953 TELEVISION RECEIVERS

CHASSIS 19K20—19K22—19K23—21K20

The 19K20, 19K22, 19K23 and 21K20 chassis described in this manual are basically alike. Alignment and adjustment procedures are identical. The slight differences which exist are as follows:

19K20: This chassis utilizes a 17 inch rectangular picture tube and is the basic chassis.

19K22: This chassis is the same as the 19K20 without a tone control.

19K23: This is the 19K20 chassis with a 21 inch picture tube and the addition of the new picture control circuit as in the 21K20 chassis.

21K20: This chassis is the same as the basic 19K20 chassis except for the 21 inch picture tube and the addition of a 5U4G low voltage rectifier and a 1X2 tube in the high voltage circuit. The 1X2 is used in conjunction with the 1B3GT rectifier to boost the picture tube second anode voltage to 18.5 Kv. This chassis uses a 6V3GT damper and a 6CD6 in the horizontal output circuit. In addition, the new picture control circuit has been incorporated in the 21K20 chassis.

For complete list of models see page 188.

Layout of 19K20, 19K22 and 19K23 Chassis

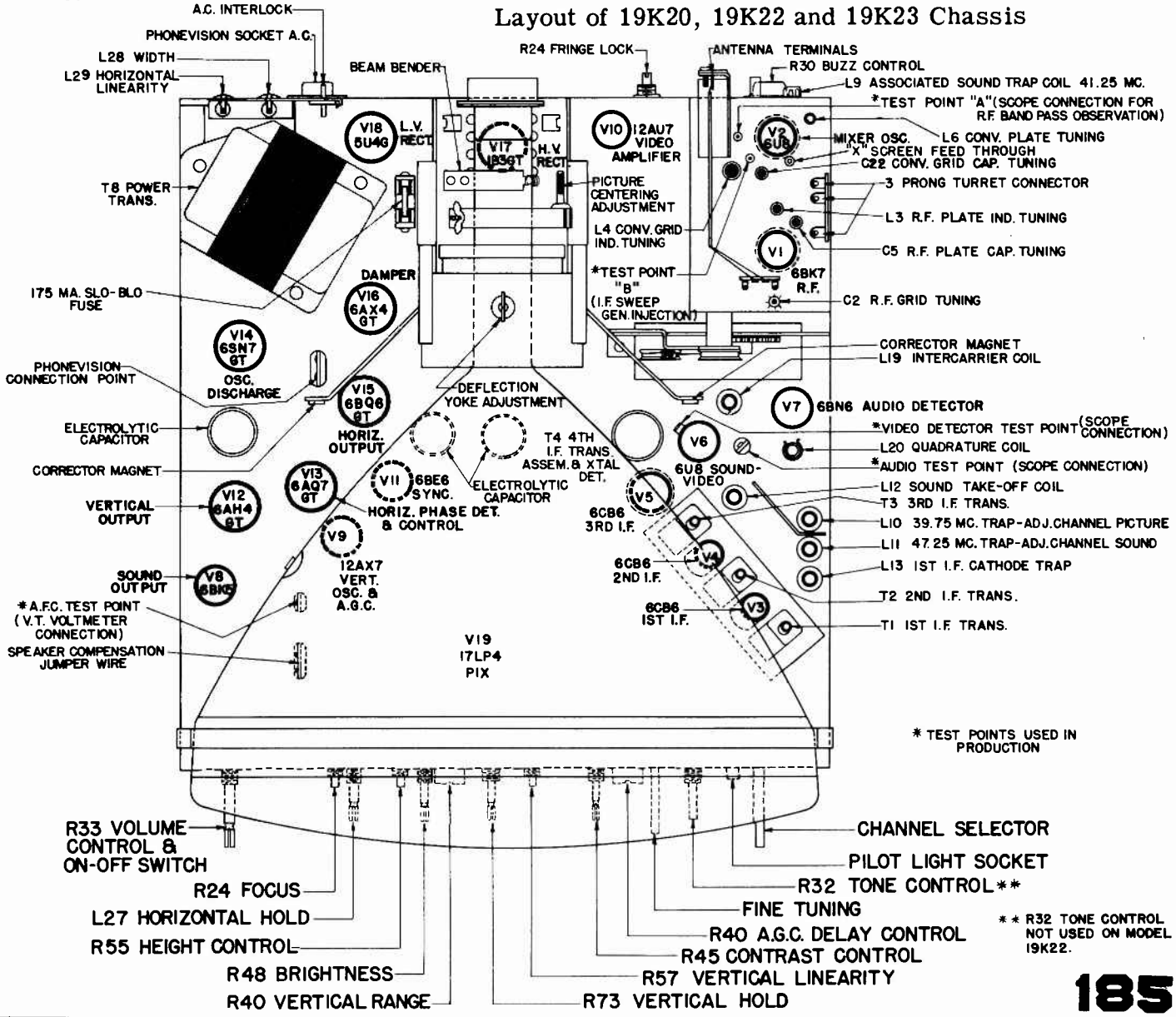

ALIGNMENT

Zenith Chassis 19K20, etc. (continued)

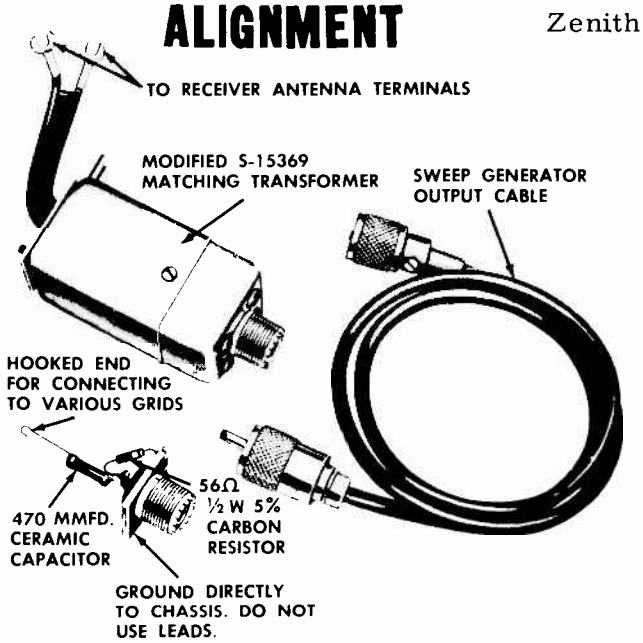

Fig. 11 IF-RF Alignment Fixtures

VIDEO IF ALIGNMENT

1. Connect the negative lead of a 2 volt battery supply to terminal "F" (Fig. 25) and the positive lead to chassis. The bias supply should be made variable so that it can be varied from negative 3 volts to positive 3 volts. Keep the supply leads short.

2. Connect the calibrated oscilloscope through a 10,000 ohm isolation resistor between terminal "E" and chassis. The sweep generator input to the receiver should be adjusted for 2 volts peak to peak detector output. Do not exceed this output level during any of the adjustments.

3. Feed the output from the sweep generator through the special termination unit shown in Fig. 11 to point "D" (Pin 1 of 6CB6, 3rd IF). Adjust the generator until a pattern similar to Fig.14 is obtained.

4. Set the Marker Generator to 44 Mc and alternately adjust the top and bottom slugs and the coupling adjustment of the 4th IF transformer for maximum gain and symmetry with the 44 Mc Marker in the center of the response curve. The wire rod type of coupling adjustment utilizes an insulated sleeve by means of which coupling can be changed by turning the rod in or out.

If the correct response curve cannot be obtained in this step, check the position of the two slugs to see that they are entering their respective coils from the opposite ends of the coil form. The position of the slugs near the center of the coils may change the coefficient of coupling, making correct alignment difficult if not impossible.

5. Connect the sweep generator cable to point "C". Adjust the attenuator for a 2 volt peak to peak detector output.

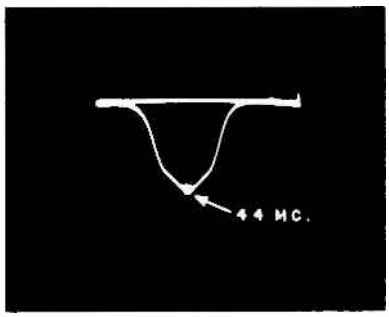

Fig. 15 3rd IF Response

6. As a preliminary adjustment for the 3rd IF, turn the bottom slug half way into its coil and the top slug completely out of its coil. Alternately adjust the top and bottom slugs until a pattern somewhat similar to Fig. 15 is obtained. When the tuning slugs are properly positioned each slug will move both humps of the response curve.

7. Connect the sweep generator cable to terminal "B" (Converter Grid). In this step it may be necessary to disconnect the bias battery and temporarily ground the AGC in order to see the highly attenuated trap slots with the oscilloscope vertical gain near maximum.

8. Adjust the 47.25 Mc, 41.25 Mc and 39.75 Mc traps for minimum marker amplitude (See Fig. 16). It can be seen that maximum oscilloscope gain has been used and as a result the top of the response curve has been "run off" the oscilloscope screen in order to see a "blow-up" of the trap slots.

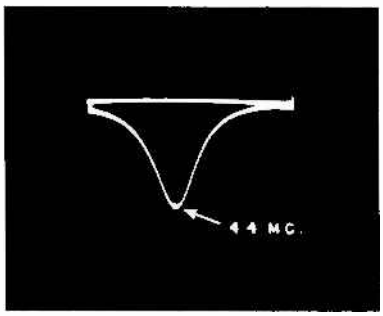

Fig. 14 4th IF Response

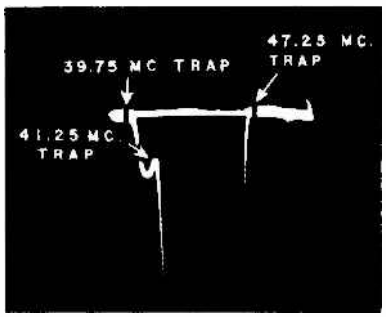

Fig. 16 Exploded View of Traps

Zenith Chassis 19K20, etc. (continued)

9. Re-connect the bias battery and readjust the oscilloscope to the calibrated position. Adjust the sweep generator for a 2 volt peak to peak output from the video detector. Bear in mind that only one tuning slug is used in each of the following stages to be aligned.

10. With the test equipment set up as in Step 10, alternately adjust the converter plate coil, the 2nd IF and the 1st IF transformers until an overall response curve similar to Fig. 17 is obtained. If the proper response curve cannot be obtained, it may be necessary to retouch the 4th IF coupling adjustment or make a slight readjustment of the other stages to obtain the correct overall response curve.

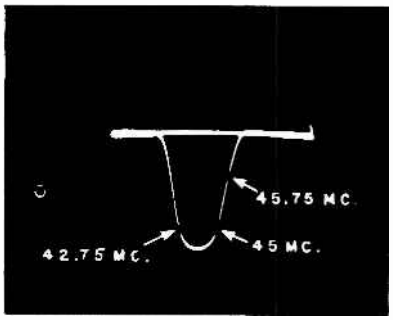

Fig. 17 Overall IF Response

11. Adjust the bias so that point "F" is 3 volts positive with respect to ground. Reduce the signal generator input to obtain 2 volts peak to peak output at terminal "E". The response curve should be similar to the solid line portion of Fig. 18 . At this point, adjust the cathode trap L13 to flatten the 45 Mc hump in the response curve as much as possible. It will be noted that with proper alignment some tuned circuits will flatten out more than others, as illustrated by the broken lines.

12. Readjust the bias to negative 2 volts as in Step 9 and check the overall response as in Step 10. A slight readjustment may be necessary after trap L13 has been aligned.

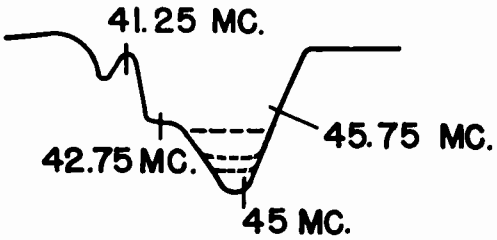

Fig. 18 Cathode Trap Response

IMPORTANT: The purpose of this procedure is to obtain a response curve similar to Fig. 17 . The curves for the other stages may or may not be the same as those shown in the manual after the overall curve has been obtained.

FRINGE LOCK ADJUSTMENT

1. Turn the fringe lock control fully clockwise and then back it off approximately 1/4 turn. Adjust the vertical and horizontal hold controls and check operation of the receiver to see that it syncs normally when the turret is switched from channel to channel.

2. If the picture jitters or shows evidence of delay, tearing, split phase, etc., back down the fringe lock control further, a few degrees at a time, each time readjusting the hold controls and switching from channel to channel until normal sync action is obtained. It will be found that under normal signal conditions, the correct adjustment will be near the counterclockwise position of the control.

3. In fringe and noisy areas, the best adjustment will be found at or near the maximum clockwise position of the control.

SOUND ALIGNMENT

Proper alignment of the 4.5 Mc intercarrier sound channel can only be obtained if the signal to the receiver antenna terminals is reduced to a level below the limiting point of the 6BN6 Gated Beam Detector. This level can be easily identified by the "hiss" which then accompanies the sound.

Various methods may be used to reduce the signal level, however, it is recommended that a step attenuator similar to the S-17203 unit be used for most satisfactory results. To prevent leakage, certain precautions must be taken when connections are made. Use as short a lead as possible between the attenuator and receiver antenna terminals and approximately 6 feet of 300 ohm shielded line between the antenna transmission line and the attenuator. The shield from the transmission line should be connected to the attenuator and the attenuator itself grounded to the TV chassis under test.

After the connections have been made, proceed as follows:

1. Tune in a tone modulated TV signal and adjust the step attenuator until the signal is reduced to a level where "hiss" is heard with the sound.

2. Adjust the sound take-off coil L12 (top and bottom slugs), intercarrier coil L19, quadrature coil L20 and buzz control R30 for the cleanest sound and minimum buzz. It must be remembered that any of these adjustments may cause the "hiss" to disappear and further reduction of the signal will be necessary so that the "hiss" does not disappear during alignment.

If intercarrier buzz is in evidence, after all normal sound adjustments have been made, the cause may be attributed to one or more of the following:

1. Improper adjustment of the AGC delay control.

2. Defective 6U8 intercarrier sound amplifier.

3. Extremely high signal levels which require attenuation in the antenna circuit.

4. Transmitter overmodulation.

ZENITH

MODEL	CHASSIS
K1812E	19K22
K1812R	19K22
K1815E	19K20
K1815R	19K20
K1820E	19K20
K1820R	19K20
K1846E	19K20
K1846R	19K20
K1850E	19K20
K1850R	19K20
K1880R	19K20
K2229R	19K23
K2230E	21K20
K2230R	21K20
K2240E	21K20
K2240R	21K20
K2258R	19K23
K2260R	21K20
K2263E	21K20
K2266	21K20
K2266R	21K20
K2267E	21K20
K2268R	21K20
K2270H	21K20
K2270R	21K20
K2286R	19K23
K2287R	21K20
K2288E	19K23
K2290R	21K20
K2291E	21K20

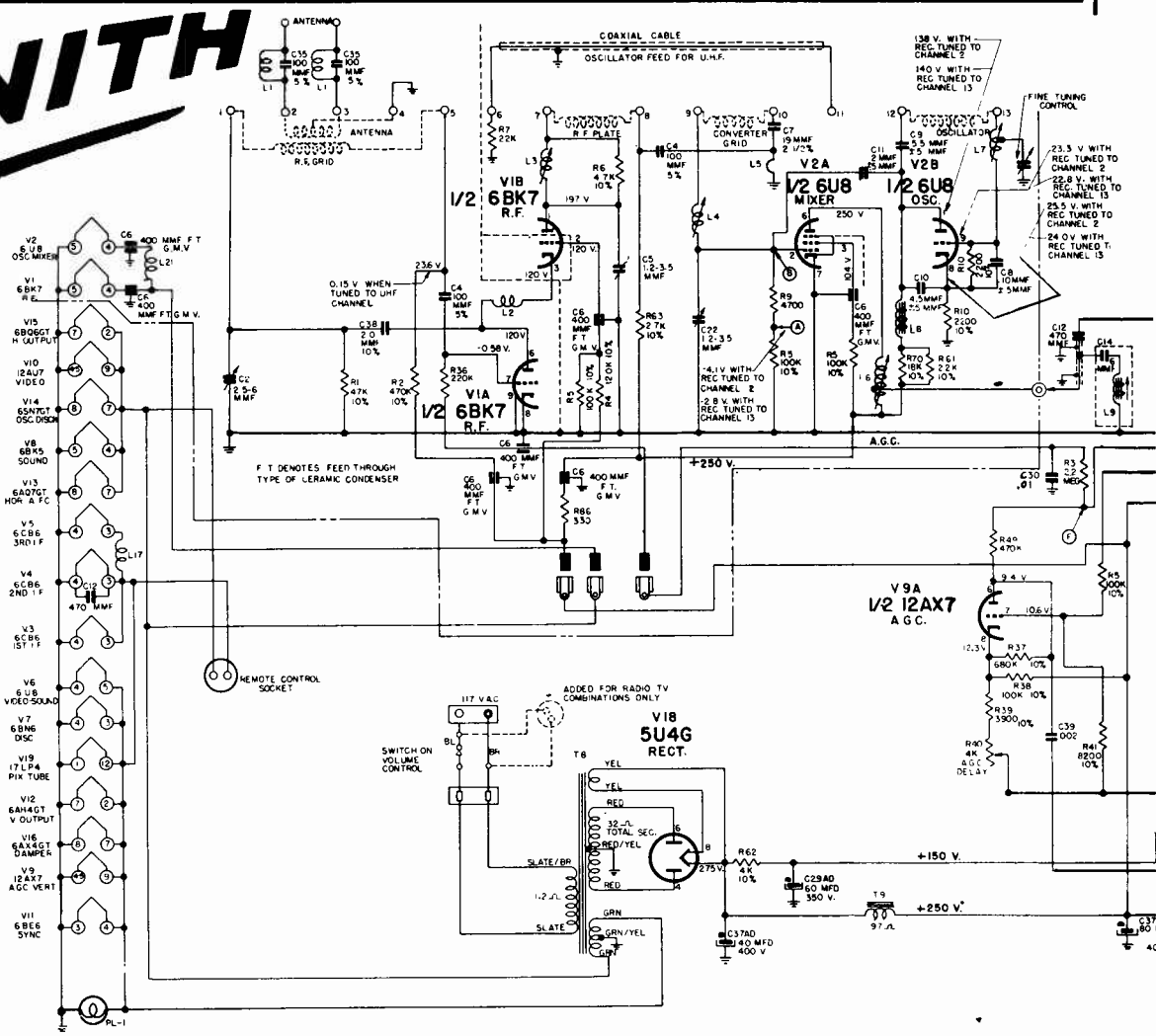

AGC ADJUSTMENTS

The AGC delay control can be adjusted from the front of the cabinet.

Connect the calibrated oscilloscope through a 10K isolation resistor to terminal "E" (Fig. 25). Select the strongest TV signal and observe the deflection on the oscilloscope screen. Adjust the AGC delay control for 2 volt peak output.

Satisfactory adjustment can also be made by observing the picture and slowly turning the AGC delay control from its maximum clockwise position, counterclockwise until a poinf is reached where the picture distorts and buzz is heard in the sound. The control should then be turned slowly clockwise and set at a point comfortably below this level of intercarrier buzz, picture distortion and improper sync.

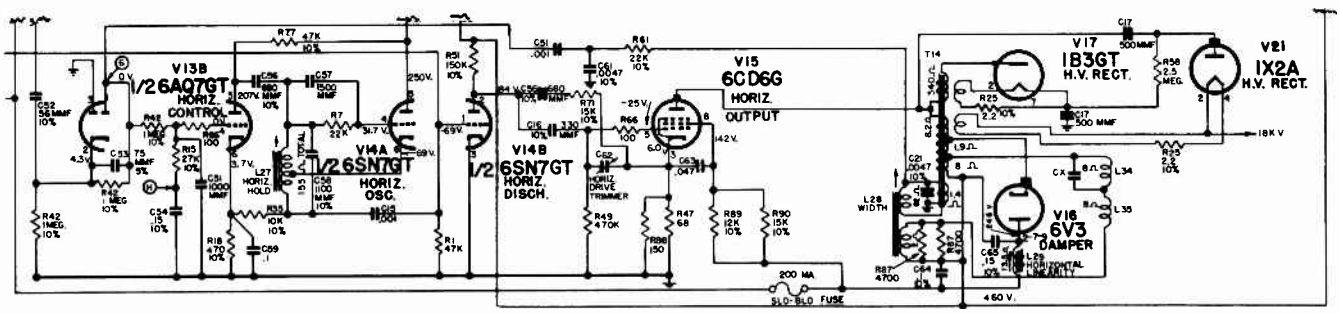

Part of schematic of 21K20 Chassis showing some of the differences from 19K20.

ZENITH RADIO CORPORATION

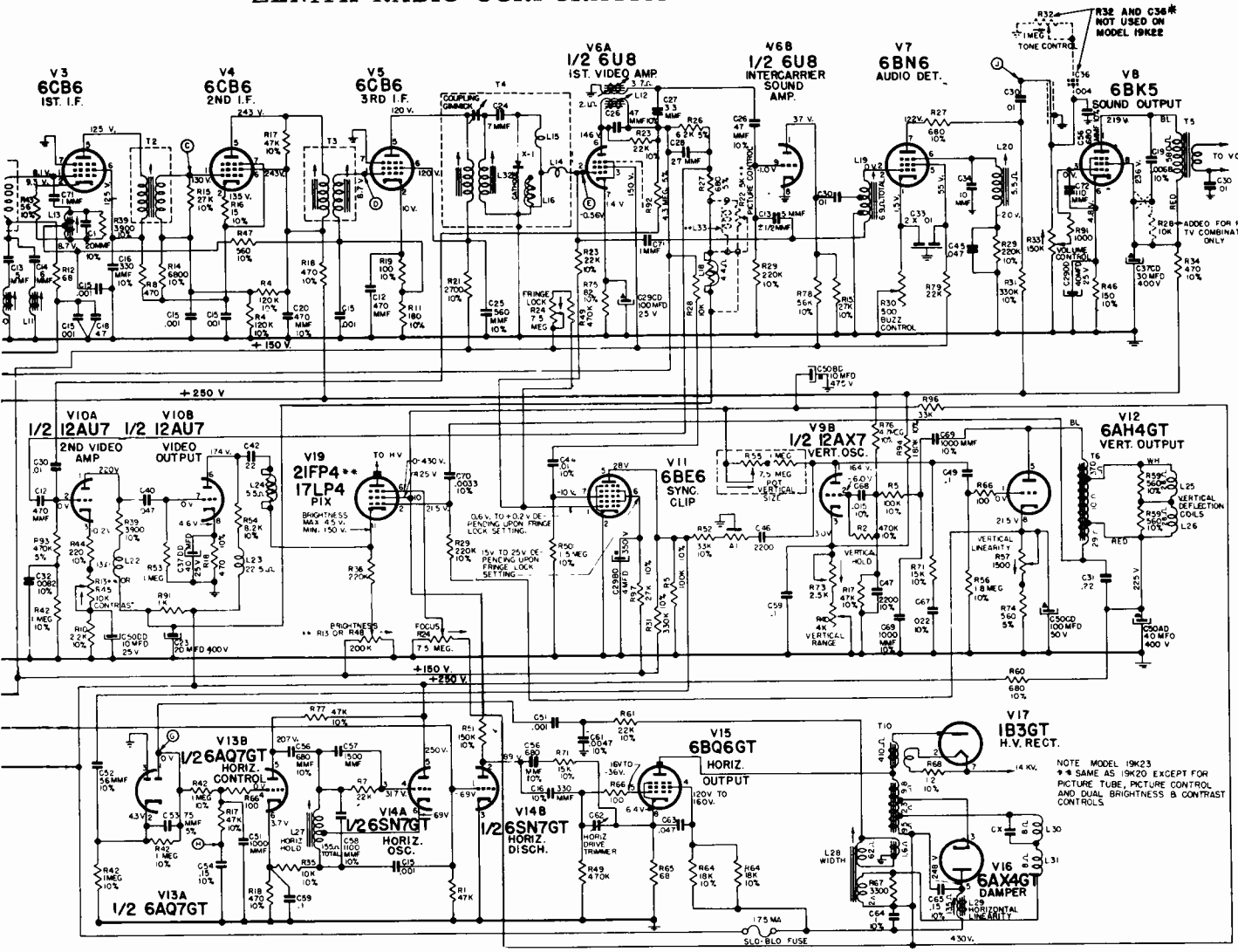

Fig. 25 Schematic Diagram - 19K20, 19K22 and 19K23 Chassis

NOTES:
ALL VOLTAGES MEASURED FROM CHASSIS TO POINTS INDICATED.
ALL VOLTAGES ARE D.C. UNLESS OTHERWISE SPECIFIED.
ALL D.C. VOLTAGES TO BE MEASURED WITH VACUUM TUBE VOLTMETER HAVING 11 MEGOHM INPUT RESISTANCE.
ALL VOLTAGE MEASUREMENTS TO BE MADE WITH NO SIGNAL PRESENT NORMAL SETTING OF CONTROLS & WITH CHANNEL SELECTOR SET TO 2 UNLESS OTHERWISE SPECIFIED.
ALL CONDENSER VALUES IN MICROFARADS UNLESS OTHERWISE SPECIFIED.
ALL RESISTORS ± 20% TOLERANCE UNLESS OTHERWISE SPECIFIED.
ALL CONDENSER CAPACITY TOLERANCE ± 20% UNLESS OTHERWISE SPECIFIED.
RESISTANCE MEASUREMENTS SHOWN WITH COILS DISCONNECTED FROM CIRCUIT.
COIL RESISTANCES NOT GIVEN ARE UNDER ONE OHM.
CATHODE RAY TUBE 2ND ANODE VOLTAGE TO BE MEASURED WITH ELECTROSTATIC OR 20K MIN. OHM PER VOLT HIGH VOLTAGE METER.
ARROWS ON POTENTIOMETERS INDICATE CLOCKWISE ROTATION.

(A) ALIGNMENT POINTS → CIRCLED ALPHABETS INDICATE ALIGNMENT AND TEST POINTS.

DENOTES CHASSIS

Zenith Chassis 19K20, etc. Waveforms and Peak to Peak Voltages.

The waveforms illustrated on this page and the peak to peak voltages indicated thereon represent an average 19K20 chassis. These waveforms and voltages however, are applicable to other chassis in the "K" line. For best results, the oscilloscope horizontal sweep should be adjusted to a sub-multiple frequency of the waveform under observation.

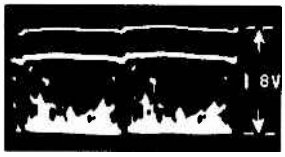

Pin 2 6U8 (V6A)
60 cycles

Pin 2 12AU7 (V10A)
60 cycles

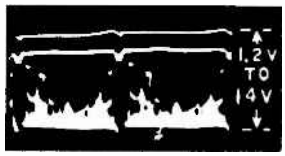

Pin 7 12AU7 (V10B)
voltage depends on
contrast setg.-60 cps

Pin 11 pix tube (V19)
voltage depends on
contrast setg.-60 cps

Pin 7 12AX7 (V9A)
60 cycles

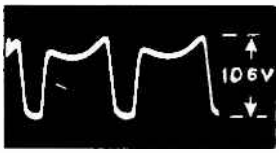

Pin 6 12AX7 (V9A)
60 cycles

Pin 7 6BE6 (V11)
60 cycles

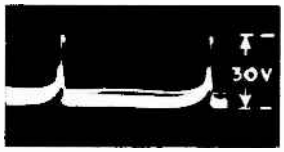

Pin 5 6BE6 (V11)
60 cycles

Pin 5 6BE6 (V11)
15.75 Kc.

Pin 1 12AX7 (V9B)
with red & bl of T6
shorted 60 cycles

Pin 2 12AX7 (V9B)
60 cycles

Junction of C49, R56
& R66 60 cycles

Pin 5 6AH4 (V12)
60 cycles

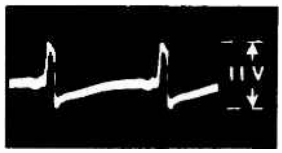

Pin 2 6AQ7GT (V13B)
15.75 Kc.

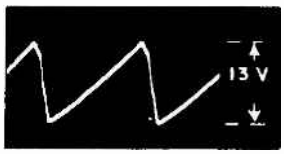

Pin 1 6AQ7GT (V13B)
15.75 Kc.

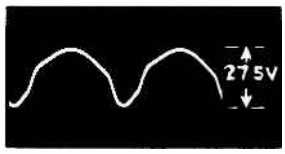

Pin 4 6SN7GT (V14A)
15.75 Kc.

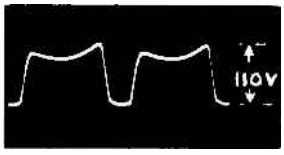

Pin 1 6SN7GT (V14B)
15.75 Kc.

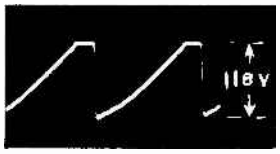

Pin 2 6SN7GT (V14B)
15.75 Kc.

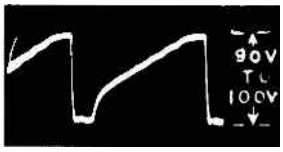

Junction of R66 &
C16 15.75 Kc.

Pin 8 6BQ6GT (V15)
15.75 Kc.

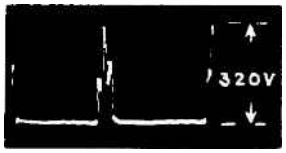

Junction of R61 &
L28 15.75 Kc

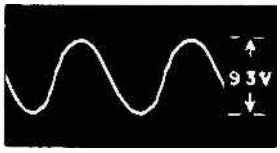

Pin 5 6AX4GT (V16)
15.75 Kc.

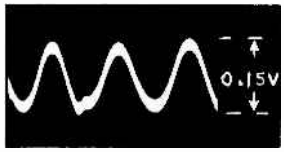

Junction of R62 &
C29AD 60 cycles

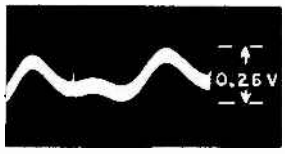

Junction of C37AD &
T9 60 cycles

Index

Under each manufacturer's name are listed that make chassis and models in numerical order, at left. The corresponding page number at right of each listing refers to the first page of each section dealing with such material.

Magnavox, cont.
CT349 83
CT350 83
CT351 83
CT352 83
CT353 83
CT354 83
CT355 83
CT356 83
CT357 83
CT362 83
CT363 83
CT372 83
CT373 83

Meck Industries
17PCSB 87
17PCW2 87
17PTE2 87
20PCSB2 87
20PCW2 87
20PTE2 87
20PTSB2 87
20PTW2 87
20TPRS2 87
21PCS2 87
21QDCS2 87
24QDCS2 87
MM-617C, -M 87
MM-620C, -T 87
JM-717C, -T 87
JM-720C, -T 87
JM-721C 87
JM-721CD 87
9026 87
9032 87
9033 87

Montgomery Ward
25WG-3066A 89
25WG-3066B 89
25WG-3071A 89
25WG-3071B 89
25WG-3072A 89
25WG-3072B 89
25WG-3073A 89
25WG-3073B 89
25WG-3075A 89
25WG-3075B 89
25WG-3077A 89
25WG-3077B 89
25WG-3079A 89
25WG-3079B 89

Motorola
17F12D 91
17F13, -B 91
17F13BC, -C 91
17K13D 91
17K14, -A,-B 91
17K14BC,-C 91
17K14W, -WC 91
17K15, -B 91
17K15BC, -C 91
17K16, -C 91
17T9EF, -F 91
17T10D 91
17T11, -C 91
17T11E, -EC 91
17T12, -B,-C 91
17T12W, -WC 91
17T13 91
21C1 91
21C1B 91
21F2, -B 91
21F3, -B 91
21K4, -A 91
21K4B, -W 91

Motorola, cont.
21K5, -B 91
21K6 91
21K7 91
21T3 91
21T4A, -AC 91
21T4ACE, -EA 91
21T5A, -BA 91
TS-292A 91
TS-292B 91
TS-324A, -B 91
TS-395A 91
TS-400A 91
TS-401 91
TS-408A 91
TS-410A 91
TS-501A 91

Olympic Radio
TK 99
TL 99
17C44 99
17K41 99
17K42 99
17K50 99
17T40 99
17T48 99
20C45 99
20C52 99
20C53 99
20D49 99
20K43 99
20K51 99
20T46 99
20T47 99

Packard-Bell
2421 103
2422 103
2423 103
2822 103

Philco Corp.
G-1 110
H-1 111
J-1 116
G-2 107
G-4 107
H-4 107
J-4 107
52-T1802 107
52-T1821 107
52-T1822 107
52-T2120 107
52-T2150W 107
52-T2151 107
52-T2252 107
53-T1824 107
53-T1825 107
53-T1826 107
53-T1827 107
53-T1852 107
53-T1853 107
53-T1883 107
53-T1884 107
53-T1886 107
53-T2125 107
53-T2126 107
53-T2127 107
53-T2152 107
53-T2183 107
53-T2227 107
53-T2228 107
53-T2260 107
53-T2262 107
53-T2264 107
53-T2266 107
53-T2268 107

Philco, cont.
53-T2269 107
53-T2270 107
53-T2271 107
53-T2272 107
53-T2273 107
53-T2285 107
53-T2286 107
53-T2287 107
71 108
81 112
84 107
91 114
94 107

RCA Victor
17T200 125
17T201 125
17T202 125
17T211 125
17T220 125
17T250DE 133
17T261DE 133
21T207, and -G use KCS-72A
21T208 125
21T217 125
21T218 125
21T227 125
21T228 125
21T229 125
21T242 125
21T244 125
KCS-72 125
KCS-72A 125
KCS-72D-1 125
KCS-72D-2 125
KCS-74 133

Raytheon
17T1 136
17T2 136
21T1 136
21T2 136
M-1733A 136
M-1734A 136
C-1735A 136
C-1736A 136
M-2107A 136
C-2108A 136
C-2109A 136
C-2110A 136
C-2111A 136

Sears, Roebuck
153-16 147
163-16 147
1132-17 147
1163-17 147
1175-21 147
1182-21 147
1189-21 147
478.319 147
478.341 147
478.375 147
478.376 147
478.380 147
478.381 147

Sentinel
1U-458 141
1U-459 141
1U-460 141
1U-461 141

Silvertone, see Sears, Roebuck

Sparton (Sparks-Withington)
27D213 151
5342A 151
5343A 151
5383A 151
5384A 151
5385A 151
5386A 151
10352 151
10353 151

Stewart-Warner
21C-9211D 155
21C-9211E 155
21C-9211F 155
21T-9211B 155
21T-9211C 155
9210C 155

Stromberg-Carlson
417 Series 159
421 Series 159

Sylvania Elect.
1-504-1 167
1-504-2 167
1-508-1 167
1-508-2 167
1-510-1 167
1-510-2 167
105B, -BU 167
105M, -MU 167
120B, -BU 167
120M, -MU 167
126B, -BU 167
126L 167
126M, -MU 167
172K, -KU 167
172M, -MU 167
175B, -BU 167
175L 167
175M, -MU 167
176B, -BU 167
176L 167
176M, -MU 167
177B, -BU 167
177M, -MU 167
178B, -BU 167
178M, -MU 167

Trav-ler Radio
36A2 175
36B2 175
217-32 175
217-33 175
217-37 175
217-331 175
217-371 175
220-34 175
220-35 175
221-36 175

Westinghouse
H-667T17 179
H-668T17 179
H-673K21 179
H-676T21 179
H-678K17 179
H-679K17 179
H-681T17 179
H-688K24 179
H-689T16 179

Westinghouse +
H-690K21 179
H-691K21 179
H-692T21 179
H-695K21 179
H-699K17 179
H-700T17 179
H-701T17 179
H-702K17 179
H-703K17 179
H-704T17 179
H-705K17 179
H-706T16 179
H-708T20 179
H-710T21 179
H-711T21 179
H-713T21 179
H-714K21 179
H-715K21 179
H-716T17 uses V-2208-1
H-718K20 179
H-720K21 179
H-721K21 179
H-722K21 179
H-723K21 179
H-724T20 179
H-725T20 179
H-730C21 179
H-732C21 179
H-733C21 179
H-754K21 179
V-2207-1 179
V-2208-1 is like V-2207-1
V-2214-1 179
V-2215-1 179
V-2215-2 179
V-2215-3 179
V-2216-1 179
V-2216-2 179
V-2216-3 179
V-2216-5 179
V-2217-1 to -5 all on 179
V-2218-1 179
V-2218-11 179
V-2219-1 179
V-2220-1 to -4 all on 179
V-2220-11 179

Zenith Radio
19K20 185
19K22 185
19K23 185
21K20 185
K1812E, -R 185
K1815E, -R 185
K1820E, -R 185
K1846E, -R 185
K1850E, -R 185
K1880R 185
K2229R 185
K2230E, -R 185
K2240E, -R 185
K2258E, -R 185
K2260R 185
K2263E 185
K2266, -R 185
K2267E 185
K2268R 185
K2270H, -R 185
K2286R 185
K2287R 185
K2288E 185
K2290R 185
K2291E 185

Another

Supreme Publications

Service Manual