Most-Often-Needed

EARLY 1955

VOLUME TV-9

Television

Servicing Information

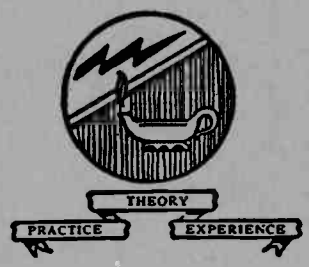

Compiled by

M. N. BEITMAN

SUPREME PUBLICATIONS

VOLUME TV-9

PRICE $3

Most - Often - Needed

1955

VOLUME TV-9

Television

Servicing Information

Compiled by

M. N. BEITMAN

Supreme Publications

PREFACE

Practically all early 1955 television sets of all important manufacturers are covered in this Volume TV-9 of Supreme Publications television service manuals. This service material was originally prepared by various manufacturers to aid in servicing sets of their make. This material has been edited in part and selected with the thought of supplying you and other servicemen with the "most-often-needed" television servicing material at the lowest possible cost.

The list of Contents is given on pages 3 and 4, while a detailed Index by manufacturers and model or chassis number begins on page 191. Refer to this list and index to find the TV material you need. A Master INDEX to all SUPREME television and radio manuals is available at 25¢, postpaid.

Our sincere thanks and appreciation is extended to every manufacturer whose products are covered by the material in this manual and who aided us in the preparation of this book.

M. N. Beitman

December 1954
Highland Park, Illinois

CONTENTS

Admiral 20A2, 20A2Z, and 20D2 CHASSIS

Models C2216AZ, K2216A, T2216A, K2217A, T2217A, F2226, C2236A

(Alignment material on pages 6 and 7; Circuit on pages 8 and 9)

CHASSIS NOTES

The 20A2 and 20A2Z chassis employ the same basic circuitry with the exception that the 20A2Z chassis has the aluminized picture tube.

The 20A2 and 20A2Z chassis are used in TV only receivers while the 20D2 chassis, with a built-in two tube (AM) tuner, is used in combination models.

HORIZONTAL OSCILLATOR & DRIVE ADJ.

If the **Horizontal Drive** control (on rear of set) is not properly adjusted, it may be difficult to obtain sufficient picture width and brightness.

When switching channels, the **Horizontal** control (on front panel) should keep the picture in horizontal sync through at least three fourths of its range. If the picture does not remain in horizontal sync, then adjust the rear panel controls as follows:

a. Allow the receiver to warm up for a few minutes. Tune in a station, set the **Brightness** control at a lower than average setting. Turn **Contrast** control fully to the left. Important: Before proceeding, be sure that the **DX Range Finder** control (AGC) is adjusted according to the instructions given in this manual

b. Turn the **Horizontal** control (front panel) completely to the left. Turn the **Horiz. Drive** control fully to the right.

c. Turn the **Horiz. Lock** adjustment to the right until the picture falls out of sync. If the picture cannot be made to fall out of sync, momentarily interrupt the signal by switching the **Channel** control off channel and then back on.

d. With the picture out of sync, turn the **Horiz. Lock** adjustment slowly to the left until the picture just falls in sync.

e. Turn the **Channel** control to an unused channel. If a white vertical line(s) appears near the center of the screen, slowly turn the **Horiz. Drive** control to the left until the line(s) just disappears.

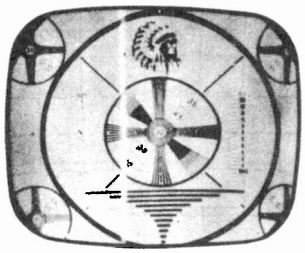

Vertical Line; Adjust HORIZ. DRIVE.

f. If, in step "e", the **Horiz. Drive** control required readjustment, tune in a station and repeat steps "c" and "d" to be sure of proper Horizontal Oscillator adjustment.

g. Adjustment should now be satisfactory. However, check adjustment by slowly rotating the **Horizontal** control in either direction while interrupting the television signal by switching the **Channel** control off channel and then back on. The picture should automatically fall in sync through at least half of the range of the **Horizontal** control. If necessary, repeat the above step.

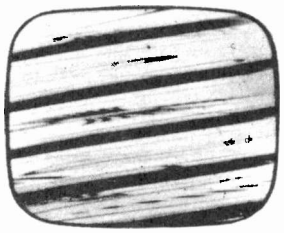

Picture Out of Horiz. Sync.

TOUCH-UP OF RATIO DETECTOR SECONDARY USING TELEVISION SIGNAL (A8, BOTTOM SLUG OF T201)

Proceed as follows:

a. Turn set on and allow about 15 minutes for warm up.

b. Tune set for normal picture and sound.

c. Carefully insert a ***non-metallic*** alignment tool through the opening in T201. An alignment tool with a screwdriver blade or hexagonal end is required depending on the transformer used, see * note below. When the alignment tool engages the bottom tuning slug A8, adjust the slug for best sound with minimum buzz level. Do this carefully as only slight rotation in either direction will generally be required. Correct adjustment point is located between the two maximum buzz peaks that will be noticed when turning the slug back and forth about ¼ to ½ turn.

d. If necessary, repeat individual channel slug adjustment and conclude with retouching the ratio detector secondary. Note: If oscillator adjustment is required for other channels, it will ***not*** be necessary to repeat the ratio detector secondary adjustment after ***once*** correctly adjusting it.

ALIGNMENT OF 4.5 MC TRAP A9, USING A TELEVISION SIGNAL

Beat interference (4.5 MC) appears in picture as very fine vertical or diagonal lines, very close together, having a "gauze-like" appearance, the pattern will vary with speech, forming a very fine herringbone pattern.

The trap can be tuned by watching the picture and adjusting the slug A9 for minimum 4.5 MC interference. If greater accuracy is required, the trap should be adjusted as instructed in step 3 under "4.5 MC Sound IF and Trap Alignment" procedure on page 7.

* If ratio detector transformer (T201) has hollow hexagonal core slugs, bottom slug adjustment A8 can be made from top of chassis, if you use alignment tool (part number 98A30-12; available at Admiral distributor). Bottom slug (A8) can be reached through the hole in the core of the upper slug (A6).

20A2, 20A2Z and 20D2 IMPORTANT ALIGNMENT HINTS

The following suggestions should be performed if difficulty is experienced during the alignment procedure.

1. IF CIRCUIT INSTABILITY: When spot frequency aligning the IF amplifiers, the VTVM pointer may swing when the hand is placed too near the IF transformers. When viewing the IF response curve on an oscilloscope, the curve may change shape with hand capacity, especially when aligning A2 (3rd IF transformer T303). To correct either of these conditions, the following alignment hints should be tried:

(a) Check the generator output leads to be certain that the unshielded portion (especially the grounded lead) be as short as practicable.

(b) Be sure that a decoupling network is used at the video detector output and that the leads on the network are kept as short as possible (see figure 10).

(c) Construct a special tube shield as shown in figure 7. This is made from an ordinary tube shield and four 10,000 ohm resistors. Keep the spacing between the two halves of the shield at a minimum (⅛ inch).

(d) The use of a ***non-metallic*** alignment tool, approximately eight inches long (part number 98A30-12), will permit adjustment without coming too near to the transformers.

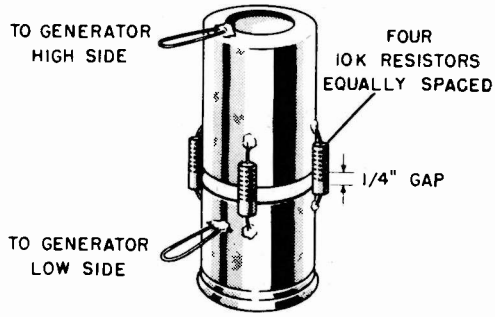

Figure 7. Special Tube Shield for IF Alignment and IF Response Curve Check.

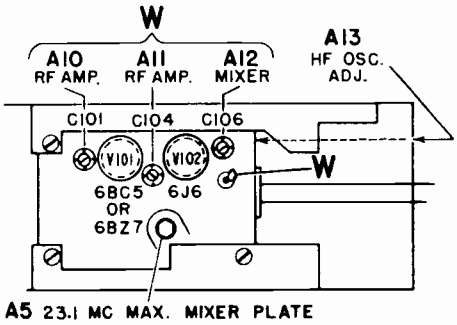

Figure 9. Top View of TV Tuner Showing Adjustment Locations.

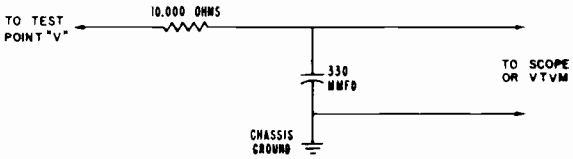

Figure 10. Decoupling Filter.

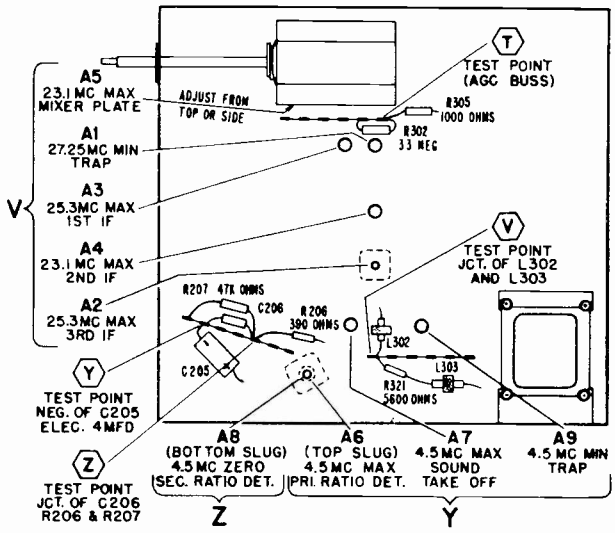

Figure 11. Bottom View of Chassis Showing Test Point Connections and IF Alignment Data.

IF AMPLIFIER AND TRAP ALIGNMENT

- Connect bias battery; negative to test point "T", see figure 11, positive to chassis. A 4½ volt battery is required for all steps below.
- Disconnect antenna. Connect a jumper wire across the antenna terminals.
- Set Channel Selector to channel 12 or other unassigned high channel, to prevent interference during alignment.
- Set the Contrast control fully to the left (counterclockwise).
- Allow about 15 minutes for receiver and test equipment to warm up.
- Use lowest DC scale on VTVM.

Step	Signal Gen. Freq.	VTVM and Signal Generator Connections	Instructions	Adjust
1	*27.25 MC	VTVM high side to test point "V" through a decoupling filter; see figs. 10 and 11, common to chassis. Generator high side to 6J6 (V102) special tube shield. Connect low side to bottom part of the tube shield, see figure 7.	Connect a 4½ volt bias battery to test point "T". Use lowest DC scale on VTVM. When peaking, keep reducing generator output for VTVM reading of approx. 1 volt or less. If unstable, refer to section 1 of the "Alignment Hints"	A1 for minimum.
2	25.3 MC			A2 and A3 for maximum.
3	23.1 MC			A4 and A5 for maximum.
4	*27.25 MC			Repeat step 1 above.
5	To insure correct IF alignment, make the "IF Response Curve Check" given below.			

* Before proceeding, be sure to check the signal generator used in alignment against a crystal calibrator or other frequency standard for absolute frequency calibration required for this operation.

IF RESPONSE CURVE CHECK

20A2, 20A2Z and 20D2

Receiver Controls and Bias Battery	Sweep Generator	Marker Generator	Oscilloscope	Instructions
Set Channel Selector on channel 12 or an unassigned high channel. Contrast control fully to the left. Connect negative of 4½ volt bias battery to test point "T"; positive to chassis.	Connect high side to 6J6 mixer-osc. special tube shield, see fig. 7. Connect low side to bottom part of tube shield. Set sweep frequency to 23MC, and sweep width approximately 7MC.	If an external marker generator is used, loosely couple high side to sweep generator lead on tube shield, low side to chassis. Marker frequencies indicated on IF Response Curve.	Connect to test point "V" through a decoupling filter, see figs. 10 and 11. Marker pips on scope will be more distinct if a capacitor from 100 mmfd. to 1000 mmfd. is connected across the oscilloscope input.	Check curve obtained against ideal response curve in fig. 12. Note tolerances on curve. Keep marker and sweep outputs at very minimum to prevent overloading. A reduction in sweep output should reduce response curve amplitude without altering the shape of the response curve. If the curve is not within tolerance or the markers are not in the proper location on the curve, touchup with IF slugs as instructed below. **Important:** If curve changes shape with hand capacity, see section 1 of "Alignment Hints".

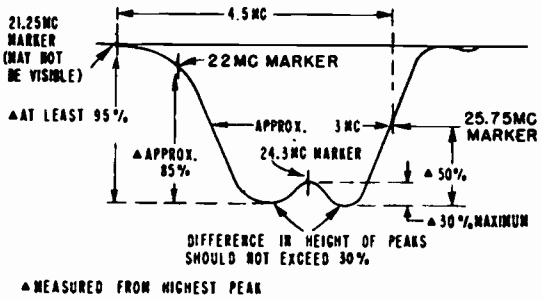

Figure 12. Ideal IF Response Curve.

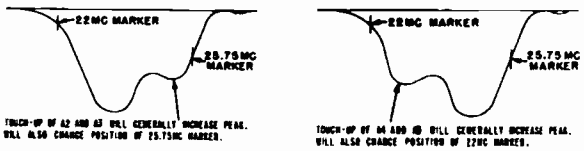

Figure 13. IF Response Curves, Incorrect Shape.

If it is necessary to adjust for approximate equal peaks and marker location, carefully adjust alignment slugs as instructed under the above figures. It should not be necessary to turn the slugs more than one turn in either direction.

If the curve cannot be made to resemble the response curve shown at left, repeat all steps under "IF Amplifier and Trap Alignment" making sure that generator frequencies are accurate and adjustments are carefully made. If a satisfactory curve cannot be obtained after repeating these steps, it may be necessary to change IF amplifier tubes or check for a defective circuit component to be sure that each stage is operating properly.

4.5 MC SOUND IF AND TRAP ALIGNMENT

See page 8 for touch-up of ratio detector using television signal without test equipment.

a. Connect signal generator high side to pin 2 of V304 (6AL5) through a .01 mfd. capacitor, connect low side to chassis.
b. Allow about 15 minutes for receiver and test equipment to warm up.
c. Set Contrast control fully to the left (counterclockwise).
d. Use a ***non-metallic*** alignment tool. If Ratio Det. Transformer (T201) has hollow core slugs, bottom slug adjustment A8 can be made from top of chassis, if you use alignment tool, part number 98A30-12 obtainable from Admiral distributor.

Step	Signal Gen. Freq. (MC)	VTVM Connections	Instructions	Adjust
	When using a signal generator, be sure to check it against a crystal calibrator or other frequency standard for accurate frequency calibration at 4.5 MC. Accuracy required is within one kilocycle. IMPORTANT: If a signal generator and frequency standard are not available, alignment can be made using a TV station signal. Tune in a station and follow steps 1, 2 and 3 below. If necessary use a higher scale on the VTVM.			
1	Set to exactly 4.5 MC	High side to test point "Y"; common to chassis.	Use lowest DC scale on VTVM.	A6 and A7 for maximum (keep reducing generator output to keep VTVM at approx. 1 volt).
2		High side to test point "Z"; common to chassis.	Use zero center scale on VTVM, if available.	A8 for zero on VTVM (the correct zero point is located between a positive and a negative maximum). If A6 was far off, repeat step 1.
3		High side to test point "Y"; common to chassis.	Connect a 10 mmfd. capacitor from pin 7 of V305 (12BY7) to pin 7 of V201 (6AU6). Use lowest DC scale on VTVM.	A9 for minimum.

Admiral Corp. Schematic for 20A2, 20A2Z and 20D2 Chassis.

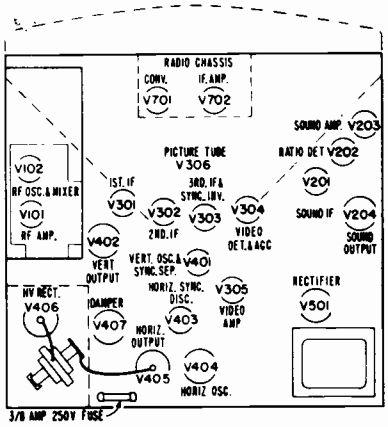

NOTE: To read schematic for 20A2 and 20A2Z chassis, use sections in heavy solid lines; to read schematic for 20D2 chassis, use sections in heavy dotted lines and connect appropriate points indicated by dots coded

B1 B2 etc.

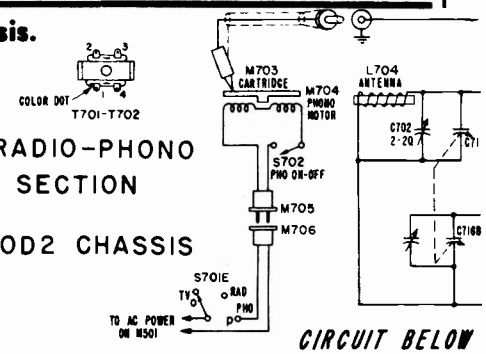

CIRCUIT BELOW

Run numbers are rubber stamped at the rear of the chassis.
(A1), (A2),.....(Y), (Z), etc. indicate alignment points and alignment connections.

WAVEFORM DATA
(Waveforms given on schematic)

Waveforms taken with **Contrast** control set fully to the right, all other controls set for normal picture (in sync). **DX Range Finder** control set fully to the left (at "0" position). Warning: Incorrect adjustment of the **DX Range Finder** control will cause waveform distortion.

Waveforms at video and sync stages obtained with transmitted signal input to receiver.

The oscilloscope sweep is adjusted for 30 cycles (which is one-half of the vertical frequency), or for 7875 cycles (which is one-half of the horizontal frequency) so that two pulses appear on the screen.

The peak-to-peak voltage readings shown are subject to some variations due to response of the oscilloscope and parts tolerances.

Waveform at V407 can also be taken by clipping or twisting the lead from the oscilloscope high side over the insulation on the lead connecting to pin 3. When taking the waveform this way, the shape of waveform will be the same but the peak-to-peak voltage will be much lower, depending upon the degree of coupling.

TV VOLTAGE DATA

- **Contrast** control turned fully clockwise. **Channel Selector** set on an unused channel. Other front controls set at approximately half rotation. **Vert. Lin.** and **Height** set at approximately half rotation. **DX Range Finder** control set fully to the left (at "0" position).
- Antenna disconnected from set with terminals shorted.
- Line voltage 117 volts AC.
- Voltages measured with a vacuum-tube voltmeter between tube socket terminals and chassis, unless otherwise indicated.
- Voltages at V101 and V102 (VHF Tuner) are measured with tube in socket. Use an adapter or lift tube out of socket just high enough to allow a needle point probe to contact tube pins. Voltages at pins 1 and 8 of V101 (6BZ7) must be taken as described above or no voltage reading will be obtained.
- Voltages at V306 measured from top of socket with tube removed.
- Voltages marked with an asterisk (*) will vary widely with control setting. In combination models, B+ voltages in TV chassis will be slightly higher when set is switched to radio position. Alternate voltage readings for radio and TV are shown for sound output tube V204 (6Y6G) in 20D2 chassis.

CAUTION

Pulsed high voltages are present on the cap of V405, pin 3 of V407 and on the filament terminals and cap of the 1B3GT tube. NO ATTEMPT SHOULD BE MADE TO TAKE MEASUREMENTS FROM THESE POINTS WITHOUT SUITABLE TEST EQUIPMENT.

Picture tube 2nd anode voltage can be measured from the 2nd anode connector and should be taken only with a high voltage instrument such as a kilovoltmeter or a vacuum-tube voltmeter with a high voltage probe. 2nd anode voltage is approximately 16.5 KV.

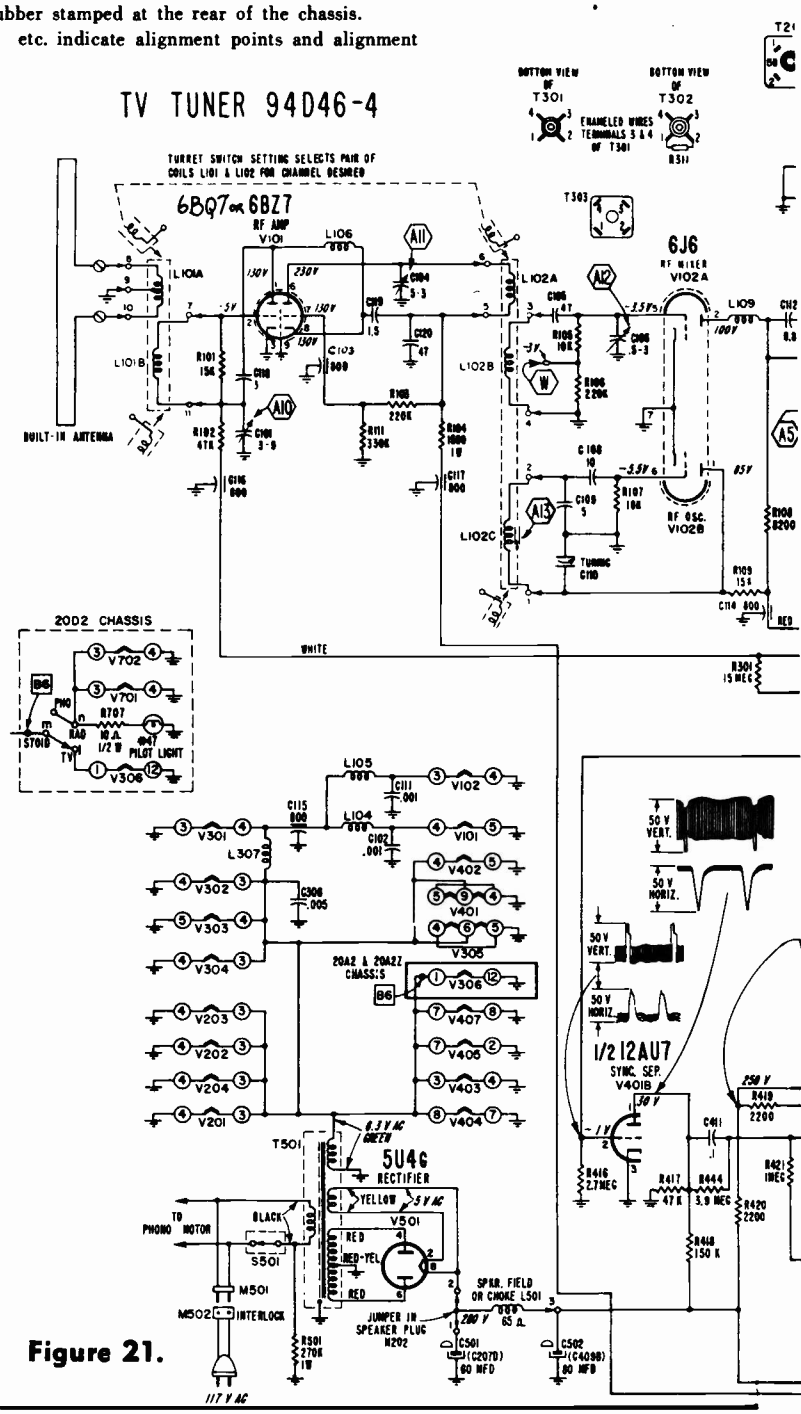

Figure 21.

MOST-OFTEN-NEEDED 1955 TELEVISION SERVICING INFORMATION

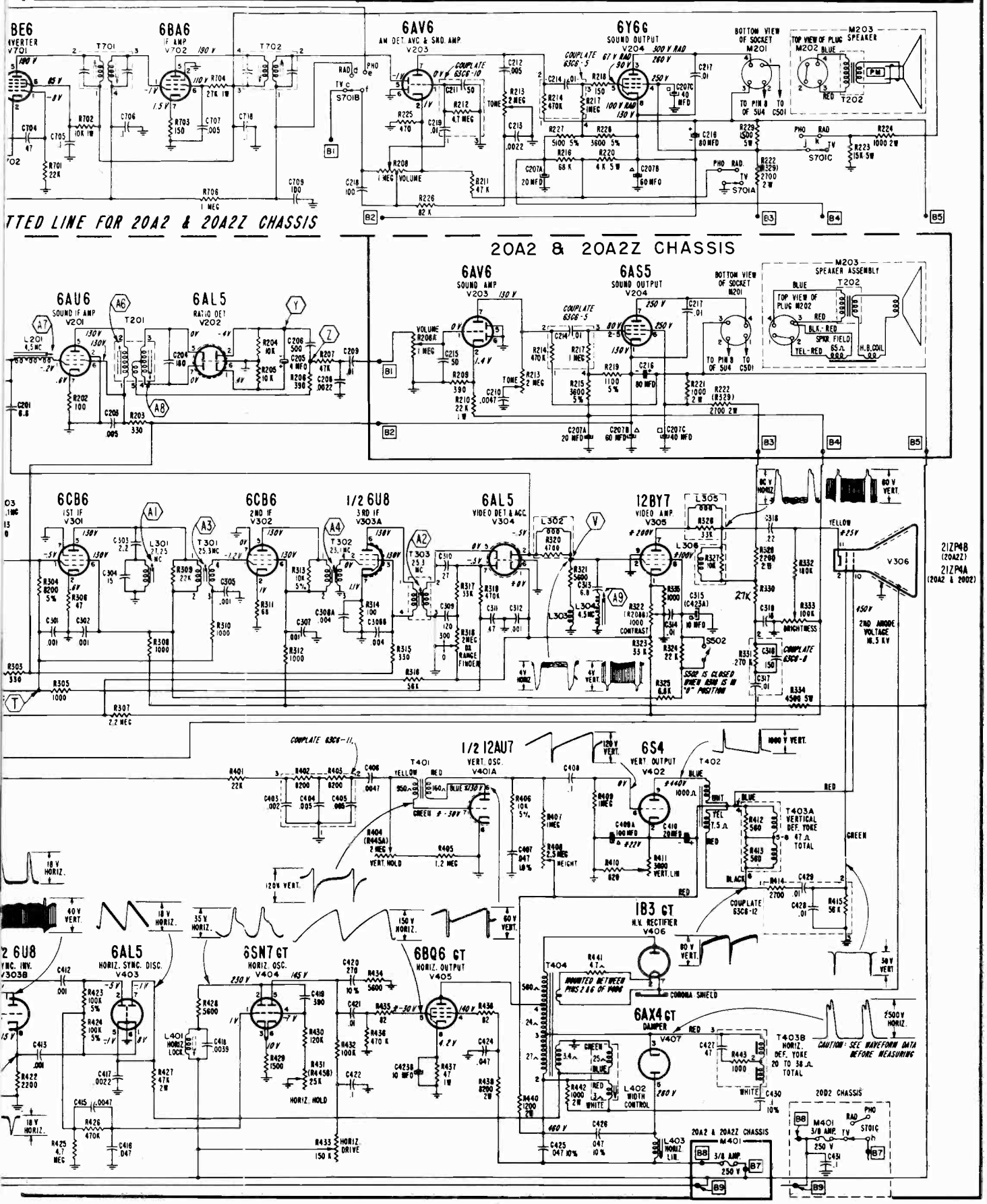

Admiral 20X5, 20X5A, 20X5B, 20X5CZ, 20XP5A

Models T1831, T1832, T1842, T2212B, T2242BZ, C2256, K2256, K2257

Since these chassis are very similar to 20A2 series chassis and in some respects are like the 19 series chassis (pages 5 to 9, and 11 to 22), the important differences will be explained below. In servicing these chassis refer to the similar material as suggested below.

CIRCUIT DIFFERENCES

Below is a brief description of circuit differences between the 20X5 series of chassis, and the previous 20 tube chassis.

TUNER: The VHF tuner used in VHF only models is nearly the same as that used in the equivalent late production 19 series or 20A2 series chassis. However, the plate voltage of the RF amplifier tube V101, 6BZ7, has been reduced to minimize failure of the tube.

IF AMPLIFIER: The IF amplifier is essentially the same as that used in the 19 series chassis, with one important exception. The adjacent channel sound trap, L301, was moved from the plate circuit of the 1st video IF amplifier V301, to the grid circuit. This results in a more gradual slope of the IF response curve on the video carrier side, making the alignment of the 20X5 series chassis less critical than that of either the 19 or 20A2 series chassis. Also, the adjustment of the FINE TUNING for the best picture is made easier.

VIDEO AMPLIFIER: The screen voltage of the video amplifier tube, V305, a 6CB6, has been increased, as compared to the 19 series chassis; thus decreasing the possibility of picture instability caused by overload of the receiver on very strong signals. The ability to operate on very strong signals is becoming increasingly important as stations continue to increase their power.

PRINTED CIRCUIT: The 20X5 series chassis utilizes a printed circuit assembly that includes the video detector and AGC tube, V304; video amplifier, V305; sound IF amplifier, V201; ratio detector, V202; sound amplifier, V203 and sound output, V204. The circuit and component values are the same whether the printed circuit or conventional wiring is used. Printed circuits offer the advantages of neatness and uniform quality. The possibility of incorrect wiring or poorly soldered connections is eliminated. The circuits are photo-etched on sensitized copper plates bonded to an insulating base. After all components, such as resistors, transformers and condensers, are assembled to the plate the latter is dipped briefly in a molten solder pot. The solder adheres to the etched circuit.

AGC: Extensive field tests have proven that incorrect adjustment of the DX RANGE FINDER control used on previous models often caused picture instability. To prevent this, the AGC circuit of the 20X5 series chassis has been designed to provide the optimum AGC characteristic for this type of chassis; thus, making an external control unnecessary.

HORIZONTAL SYNC: The sync separator, sync inverter, horizontal sync discriminator, and horizontal oscillator circuitry is practically identical to that used in the 20A2 chassis.

HORIZONTAL DRIVE CONTROL: The HORIZONTAL DRIVE control is a compression type trimmer capacitor used as a variable reactance in series with the horizontal output tube grid circuit. With maximum capacity, which is obtained with full clockwise rotation of the control, the horizontal drive will be maximum. In the 19 and 20A2 series chassis, the HORIZONTAL DRIVE control was a trimmer capacitor in shunt with the grid of the horizontal output tube. Therefore, the action of the HORIZONTAL DRIVE control in the 20X5 series chassis is opposite to that of the 19 and 20A2 series chassis.

HORIZONTAL OUTPUT: The use of a new horizontal output transformer and the horizontal deflection circuit design, makes the use of HORIZONTAL WIDTH and LINEARITY controls unnecessary. The newly designed transformer provides adequate width, even at low line voltage; with very good linearity. Under abnormally low line voltage conditions, below 105 volts AC, the width can be increased by reducing the value of the horizontal output tube screen grid decoupling resistor R439, to a minimum of 12,000 ohms.

FOCUS: All 20X5 series chassis, use electrostatically focused picture tubes and do not require external focus assembly or control. However, the focus of the picture tube is affected by the position of the ion trap.

PICTURE TUBES: Since the picture tubes are electrostatically focused and require no external focus assembly or control, a simpler picture tube mounting assembly is used. The inherent focus of these tubes is uniform over the entire viewing area.

ALIGNMENT PROCEDURE

In general, the alignment procedure is the same as that for the 20A2 series chassis.

With the exception of the location of the adjacent channel trap L301, the chassis layout is almost identical to that of the 20A2 Chassis.

Admiral

19L2, 19L2Z, 19M2, 19N2Z, 19R2, 19S2, 19T1, 19T1C, 19W1, 19W1A, 19W1B, 19W1C, 19Y1A, and 20L2 CHASSIS

Models using the above listed chassis are: TA1811, TA1812, TA1822, TA2211, TA2212, CA2215Z, LA2215Z, TA2215, CA2216Z, HA2216Z, KA2216, LA2216Z, TA2216, -A, CA2217Z, HA2217Z, KA2217, LA2217Z, TA2217, -A, TA2218, TA2222, FA2226, KA2226, TA2226, KA2227, CA2236, -A, CA2237, TA2242, CA2246, and CA2526.

The service material below and continued through page 22, with a few exceptions is applicable to all chassis listed above. The circuit diagram of the 19T1C chassis (with 17" picture tube), 19W1B and 19W1C chassis (with 21" picture tubes) is published on pages 16-17. These are all-channel receivers. Chassis 19T1, 19W1, and 19W1A, also employ the same basic circuitry as do these other sets. The principal electrical difference is the inclusion of the DX Range Finder control in these additional sets. The partial circuit of 20L2 chassis printed on the next page, over, shows the wiring of DX Range Finder circuit. These various chassis use one-piece narrow chassis pan as do some of the later production 19W1 sets and others so described.

Chassis 19L2 and 19L2Z (Z means aluminized picture tube) differ in minor respects from the other sets and do have DX Range Finder control. These sets as well as many of the others have tone controls. Chassis 19R2 uses a 24" picture tube and differs in a small way from the other sets. For example, 19R2 uses 12BY7 video amplifier, 6AV5 vertical output, 6CD6G horiz. output, and 6AU4GT damper tube.

Chassis 19M2 is a combination receiver of the same series and has a built-in 2-tube AM radio tuner. The 19N2Z chassis is a combination set having a separate 3-tube AM radio (Model 3D1) with automatic recod changer RC600 combined in one assembly. These sets, of course, incorporate needed switching arrangement.

The 19Y1A and 19S2 chassis (both using 21" picture tubes) also use the same basic circuitry corresponding in the main to 19M2 and 19L2. However these newer sets omit DX Range Finder and employ one-piece narrow chassis pan. The circuit of 19W1B chassis printed on pages 16-17 may be used for trouble-shooting these additional sets. Some minor part values may differ and there is a slight difference in tube location.

Chassis 20L2 uses type 21ZP4A picture tube and type 12BY video amplifier. Some of the voltage values differ from values shown in the circuit on pages 16-17. The sync circuits differ considerably and this portion of the circuit applicable to chassis 20L2 is printed on the next page, over.

In general, alignment information and other service data is applicable to all chassis types described on the pages that follow.

If separate VHF and UHF external antennas are used, connect the VHF antenna lead-in to the lower antenna terminals and the UHF antenna lead-in to the upper antenna terminals.

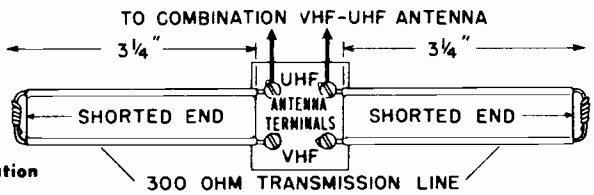

Figure 1. Antenna Connections When Combination VHF-UHF Antenna is Used.

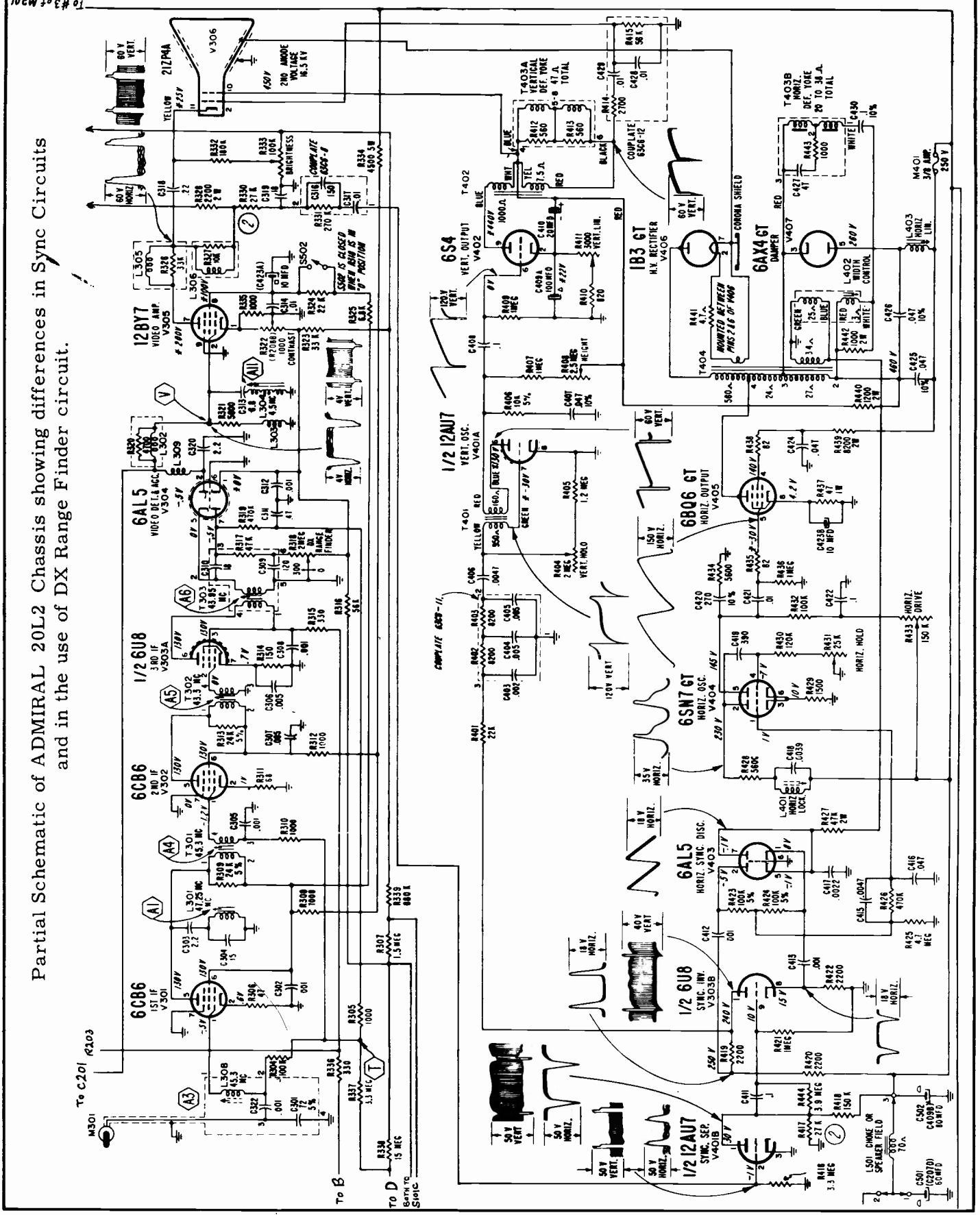

Partial Schematic of ADMIRAL 20L2 Chassis showing differences in Sync Circuits and in the use of DX Range Finder circuit.

SIMPLIFIED ALIGNMENT

After becoming familiar with alignment procedure, some servicemen simplify subsequent alignment of sets by merely using the essential alignment data given in figures below.

ALIGNMENT TOOLS

The following alignment tools are required. They can be obtained from the Admiral distributor under the part numbers listed below:

Metal alignment screwdriver part number 98A30-9.

Non-metallic (fiber) alignment screwdriver (11½" long, ⅛" diameter) part number 98A30-10.

Non-metallic alignment wrench (9" long, for large hexagon core IF slugs) part number 98A30-12.

Non-metallic alignment wrench (9" long, for small hexagon core IF slugs) part number 98A30-14.

Figure 29. Tube Shield for IF Alignment and IF Response Curve Check.

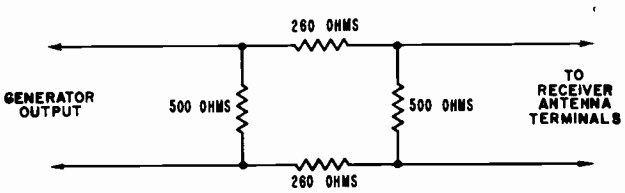

Figure 30. Illustration of 12 db Attenuation Pad for Viewing Over-all RF-IF Response Curve.

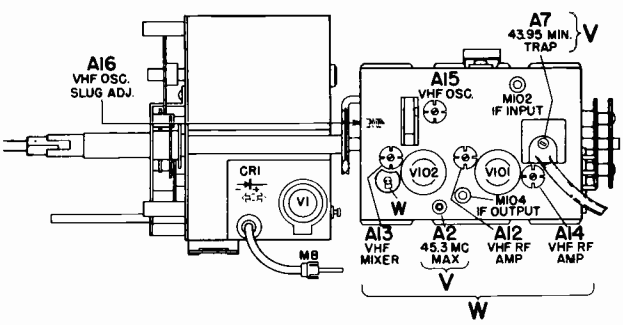

Figure 31. Top View of TV Tuner Showing Adjustment Locations.

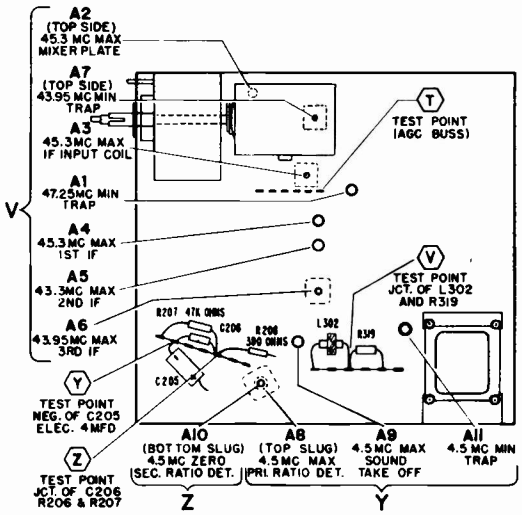

Figure 32. Bottom View of 19T1, 19W1, and 19W1A Chassis Showing Test Point Connections and IF Alignment Data.

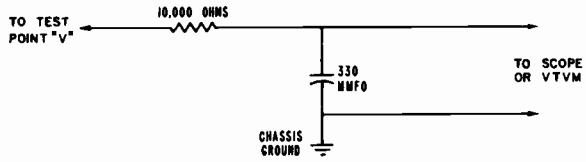

Figure 33. Decoupling Filter.

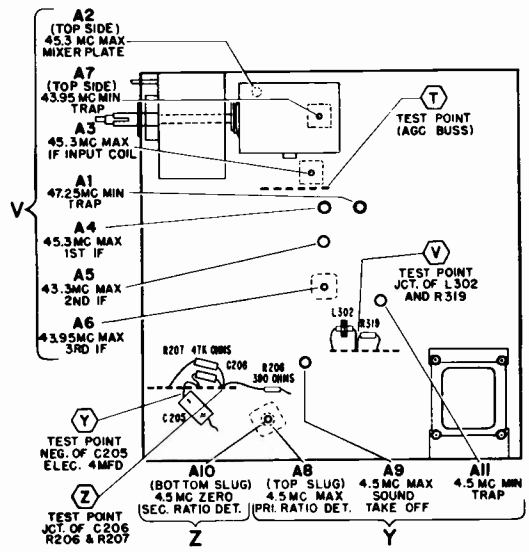

Figure 34. Bottom View of 19L2, 19L2Z, 19M2, 19N2Z and 19R2 Chassis Showing Test Point Connections and IF Alignment Data.

19T1, 19W1, 19W1A, 19L2, 19L2Z, 19M2, 19N2Z and 19R2

IF AMPLIFIER AND TRAP ALIGNMENT

- Connect bias battery; negative to test point "T", see figure 32 or 34, positive to chassis. A 4½ volt battery is required for all steps below.
- Disconnect antenna. Connect a jumper wire across the antenna terminals.
- Set Channel Selector to channel 12 or other unassigned high channel, to prevent interference during alignment.
- Set the Contrast control fully to the left (counterclockwise).
- Allow about 15 minutes for receiver and test equipment to warm up.
- Use lowest DC scale on VTVM.

Note: Since A2 and A3 are adjustments of an overcoupled double tuned circuit, adjustment of A3 is first made at 43.3 MC (step 3) and then at 45.3 MC (step 5), to obtain proper peak.

Step	Signal Gen. Freq.	VTVM and Signal Generator Connections	Instructions	Adjust
*1	*47.25 MC	VTVM high side to test point "V" through a decoupling filter; see figs. 32, 33 and 34, common to chassis. Generator high side to 6U8 (V102) special tube shield. Connect low side to chassis near the tube shield, see figure 29.	Connect a 4½ volt bias battery to test point "T". Use lowest DC scale on VTVM. When peaking, keep reducing generator output for VTVM reading of approx. 1 volt or less. If unstable, refer to section 1 of the "Alignment Hints" on page 15.	A1 for minimum.
2	45.3 MC			A2 for maximum.
3	43.3 MC			A3 for maximum.
4	45.3 MC			Repeat step 2.
5	45.3 MC			Readjust A3 for maximum.
6	45.3 MC			A4 for maximum.
7	43.3 MC			A5 for maximum.
8	43.95 MC			A6 for maximum.
9	43.95 MC	Connect VTVM as above. Generator high side to antenna terminals; full output may be required.	Follow above instructions. Set Channel selector to 2 or other low channel.	A7 for minimum.
10	To insure correct alignment, repeat step 1 and 6, then make the "IF Response Curve Check" given below.			

* Before proceeding with alignment, turn slugs A2 and A3 out fully (counterclockwise). Check the signal generator used in alignment against a crystal calibrator or other frequency standard for absolute frequency calibration required for this operation.

IF RESPONSE CURVE CHECK

(Using sweep generator and oscilloscope)

Receiver Controls and Bias Battery	Sweep Generator	Marker Generator	Oscilloscope	Instructions
Set Channel Selector on channel 12 or an unassigned high channel. Contrast control fully to the left. Connect negative of 4½ volt bias battery to test point "T"; positive to chassis.	Connect high side to 6U8 mixer-osc. insulated tube shield, see fig. 29. Connect low side to chassis near tube shield. Set sweep frequency to 44.5 MC, and sweep width approximately 7 MC.	If an external marker generator is used, loosely couple high side to sweep generator lead on tube shield, low side to chassis. Marker frequencies indicated on IF Response Curve.	Connect to test point "V" through a decoupling filter, see figs. 32, 33 and 34. Marker pips on scope will be more distinct if a capacitor from 100 mmfd. to 1000 mmfd. is connected across the oscilloscope input.	Check curve obtained against ideal response curve in fig. 36. Note tolerances on curve. Keep marker and sweep outputs at very minimum to prevent overloading. A reduction in sweep output should reduce response curve amplitude without altering the shape of the response curve. If the curve is not within tolerance or the markers are not in the proper location on the curve, touchup with IF slugs as instructed below. **Important:** If curve changes shape with hand capacity, see section 1 of "Alignment Hints."

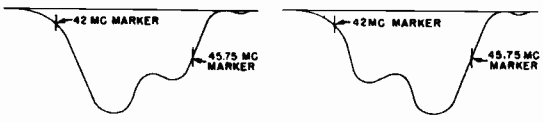

Figure 35. IF Response Curves, Incorrect Shape.

If it is necessary to adjust for approximate equal peaks and correct marker location, carefully adjust slug A2 and if necessary, adjust slug A3. It should not be necessary to turn the slugs more than one turn in either direction.

If the curve cannot be made to resemble the response curve shown at right, repeat all steps under "IF Amplifier and Trap Alignment" making sure that generator frequencies are accurate and adjustments are carefully made. If a satisfactory curve cannot be obtained after repeating these steps, it may be necessary to change IF amplifier tubes or check for a defective circuit component to be sure that each stage is operating properly.

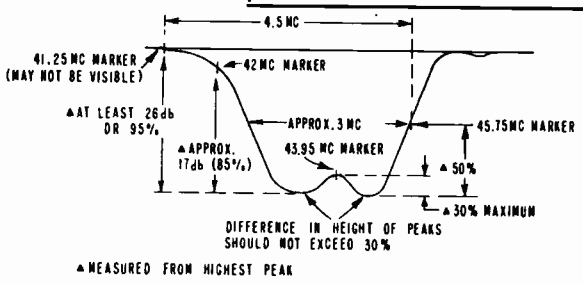

Figure 36. Ideal IF Response Curve.

4.5 MC SOUND IF AND TRAP ALIGNMENT

See below for touch-up of ratio detector using television signal without test equipment.

- Connect signal generator high side to pin 2 of V304 (6AL5) through a .01 mfd. capacitor, connect low side to chassis.
- Allow about 15 minutes for receiver and test equipment to warm up.
- Set Contrast control fully to the left (counterclockwise).
- Use a ***non-metallic*** alignment tool. If Ratio Det. Transformer (T201) has hollow core slugs, bottom slug adjustment A8 can be made from top of chassis, if you use alignment tool, part number 98A30-12 obtainable from Admiral distributor.

Step	Signal Gen. Freq. (MC)	VTVM Connections	Instructions	Adjust
	When using a signal generator, be sure to check it against a crystal calibrator or other frequency standard for accurate frequency calibration at 4.5 MC. Accuracy required is within one kilocycle. IMPORTANT: If a signal generator and frequency standard are not available, alignment can be made using a TV station signal. Tune in a station and follow steps 1, 2 and 3 below. If necessary use a higher scale on the VTVM.			
1	Set to exactly 4.5 MC	High side to test point "Y"; common to chassis.	Use lowest DC scale on VTVM.	A8 and A9 for maximum (keep reducing generator output to keep VTVM at approx. 1 volt).
2		High side to test point "Z"; common to chassis.	Use zero center scale on VTVM, if available.	A10 for zero on VTVM (the correct zero point is located between a positive and a negative maximum). If A8 was far off, repeat step 1.
3		High side to test point "Y"; common to chassis.	*Connect a 10 mmfd. capacitor from pin 5 of V305 (6CB6) to pin 7 of V201 (6AU6). Use lowest DC scale on VTVM.	A11 for minimum.

* In 19R2 chassis, connect 10 mmfd. capacitor from pin 7 of V305 (12BY7) to pin 7 of V201 (6AU6).

TOUCH-UP OF RATIO DETECTOR SECONDARY USING TELEVISION SIGNAL (A10, BOTTOM SLUG OF T201)

*Adjustment A10 is accessible through the ¼" hole (just below T201) in bottom of the cabinet or the chassis mounting shelf, located toward the left side facing the rear of the set. See figures 32 and 34. Removal of the chassis is therefore not required. ***Adjustment need be made on one channel only.*** Proceed as follows:

a. Turn set on and allow about 15 minutes for warm up.
b. Tune set for normal picture and sound.
c. Carefully insert a non-metallic alignment tool through the opening in cabinet bottom below T201. An alignment tool with a screwdriver blade or hexagonal end is required depending on the transformer used, see * note below. When the alignment tool engages the bottom tuning slug A10, adjust the slug for best sound with minimum buzz level. Do this carefully as only slight rotation in either direction will generally be required. Correct adjustment point is located between the two maximum buzz peaks that will be noticed when turning the slug back and forth about ¼ to ½ turn.

ALIGNMENT OF 4.5 MC TRAP A11, USING A TELEVISION SIGNAL

Beat interference (4.5 MC) appears in picture as very fine vertical or diagonal lines, very close together, having a "gauze-like" appearance, the pattern will vary with speech, forming a very fine herringbone pattern.

The trap can be tuned by watching the picture and adjusting slug A11 for minimum 4.5 MC interference. If greater accuracy is required, the trap should be adjusted as instructed in step 3 of the "4.5 MC Sound IF and Trap Alignment".

IMPORTANT ALIGNMENT HINTS

The following suggestions should be followed if difficulty is experienced during the alignment procedure.

1. IF CIRCUIT INSTABILITY: When spot frequency aligning the IF amplifiers, the VTVM pointer may swing when the hand is placed too near the IF transformers. When viewing the IF response curve on an oscilloscope, the curve may change shape with hand capacity, especially when aligning A6 (3rd IF transformer T303). To correct either of these conditions, the following alignment hints should be tried:

(a) Check the generator output leads to be certain that the unshielded portion (especially the grounded lead) be as short as practicable.

(b) Be sure that a decoupling network is used at the video detector output and that the leads on the network are kept as short as possible (See figure 33).

(c) For injecting IF signal use an insulated tube shield over V102 (6U8) Oscillator-Mixer tube. Insulate bottom inside of tube shield with masking tape; see figure 29.

(d) The use of a non-metallic alignment tool, approximately eight inches long (part number 98A30-12), will permit adjustment without coming too near to the transformers.

* Ratio detector transformer (T201) has hollow hexagonal core slugs, bottom slug adjustment A10 can be made from top of chassis, if you use alignment tool (part number 98A30-12; available at Admiral distributor). Bottom slug (A10) can be reached through the hole in the core of the upper slug (A8).

Admiral Corp. **Schematic for 19T1C, 19W1B and 19W1C VHF-UHF Television Chassis.**

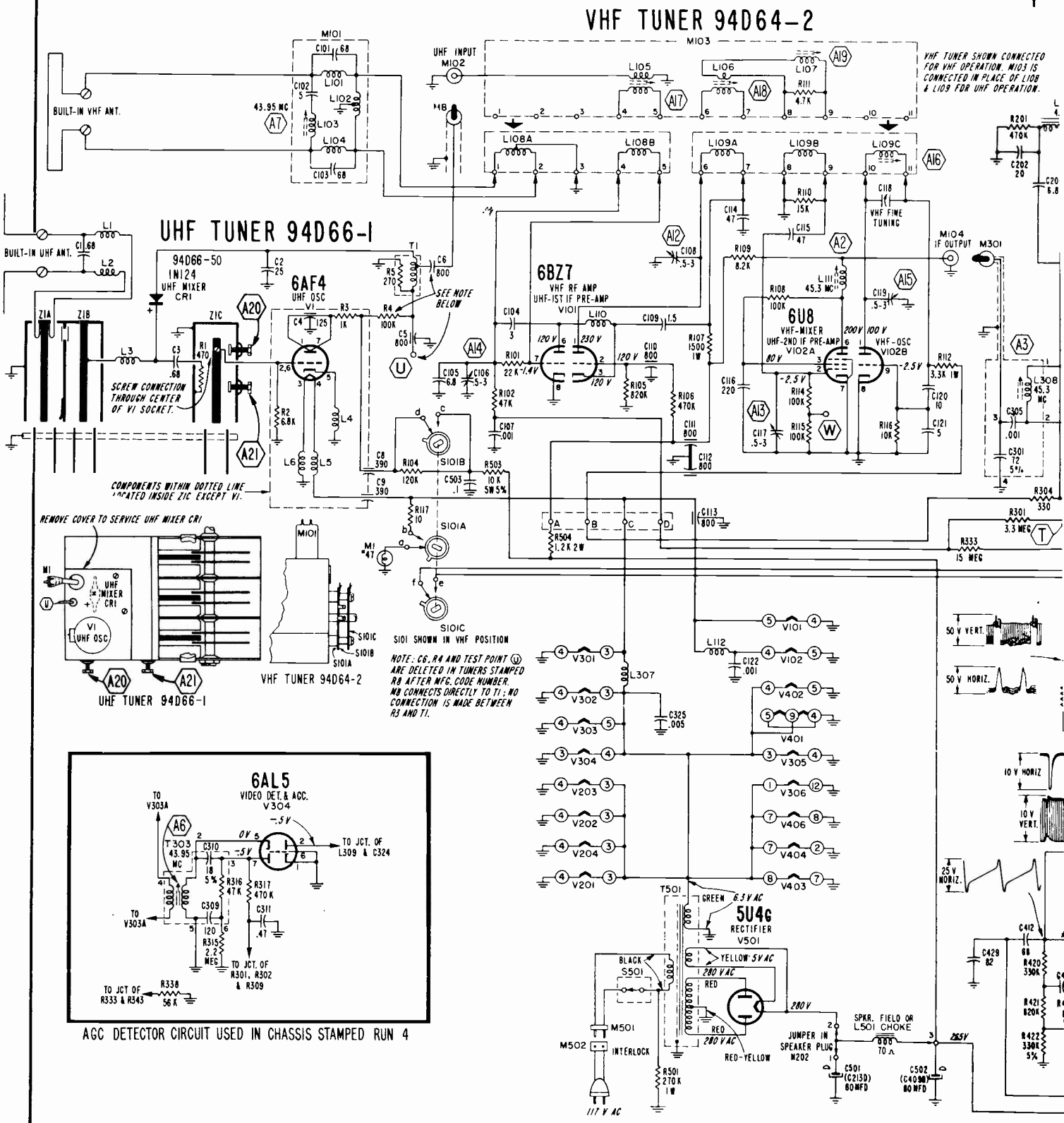

AGC DETECTOR CIRCUIT USED IN CHASSIS STAMPED RUN 4

Admiral 19T1, 19T1C, 19W1, 19W1A, 19W1B, 19W1C, 19Y1A, 19L2, 19L2Z, 19M2, 19N2Z, 19R2, and 19S2 CHASSIS

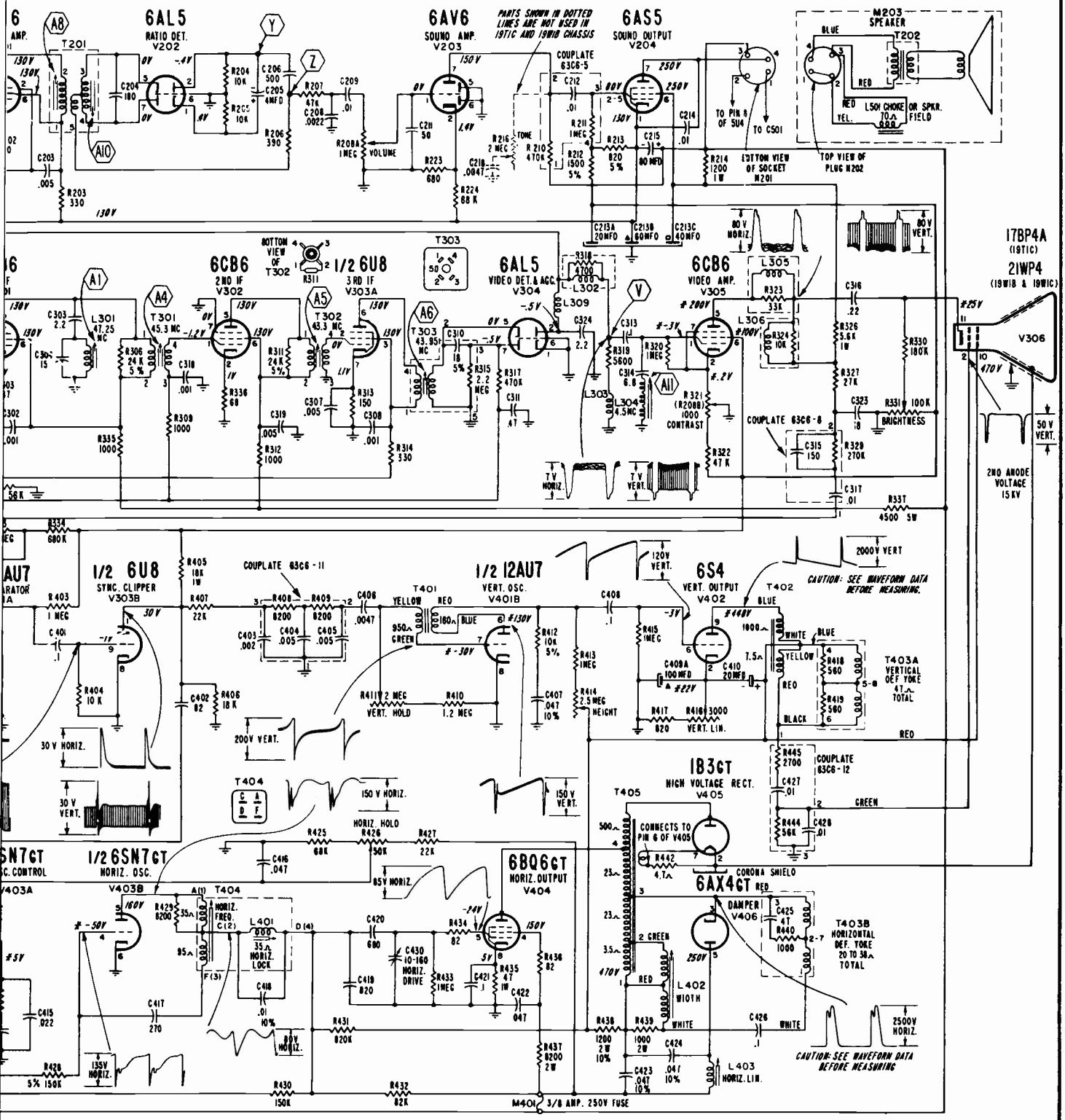

VHF TUNER RF AND MIXER ALIGNMENT

- Connect negative of 4½ volt bias battery to AGC buss (test point "T"), positive to chassis. If it is difficult to obtain a curve of sufficient amplitude, remove battery and connect a wire jumper from test point "T" to chassis.
- Connect sweep generator (with 300 ohm output) to antenna terminals. If sweep generator does not have a built-in marker generator, loosely couple a marker generator to the antenna terminals. To avoid distortion of the response curve, keep sweep generator output at a minimum, marker pips just barely visible.
- Connect oscilloscope to test point "W" on tuner (figure 38). Keep scope leads away from chassis.
- Allow about 15 minutes for receiver and test equipment to warm up.

Step	Marker Gen. Freq. (MC)	Sweep Gen. Frequency	Instructions
1	193.25 MC (Video Carrier) 197.75 MC (Sound Carrier)	Sweeping Channel 10. See frequency table below.	Alternately adjust A12 and A13 (figure 38) as required to obtain equal peak amplitudes and symmetry, consistent with flat top appearance, proper band width and correct marker location; see figure 37.
2	83.25 MC (Video Carrier) 87.75 MC (Sound Carrier)	Sweeping Channel 6. See frequency table below.	Adjust A14 as required to obtain curve having maximum amplitude and flat top appearance consistent with proper band width and correct marker location; see figure 37. After completing adjustment, recheck adjustment of step 1.
3	Set the sweep generator to sweep the channel to be checked. Set the marker generator for the corresponding video carrier frequency and sound carrier frequency.		Check each channel operating in the service area for curve shown below. In general, the adjustment performed in steps 1 and 2 are sufficient to give satisfactory response curves on all channels. However, if reasonable alignment is not obtained on a particular channel, (a) check to see that coils have not been intermixed, or (b) try replacing the pair of coils for that particular channel, or (c) repeat step 1 for a weak high channel as a compromise adjustment to favor the particular channel. Repeat step 2 for the weak low channel to favor the particular low channel. If a compromise adjustment is made, other channels operating in the service area should be checked to make certain that they have not been appreciably affected.

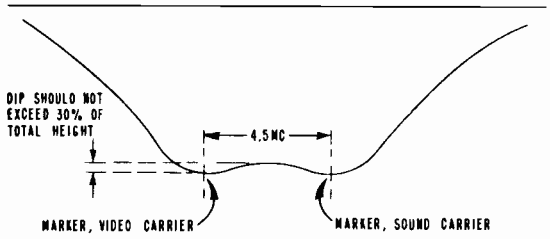

Full skirt of curve will not be visible unless generator sweep width extends beyond 12 MC.
Figure 37. RF Response Curve.

VHF FREQUENCY TABLE

Channel Number	Channel Freq., MC	Video Carrier, MC	Sound Carrier, MC	HF Osc., MC
2	54-60	55.25	59.75	101
3	60-66	61.25	65.75	107
4	66-72	67.25	71.75	113
5	76-82	77.25	81.75	123
6	82-88	83.25	87.75	129
7	174-180	175.25	179.75	221
8	180-186	181.25	185.75	227
9	186-192	187.25	191.75	233
10	192-198	193.25	197.75	239
11	198-204	199.25	203.75	245
12	204-210	205.25	209.75	251
13	210-216	211.25	215.75	257

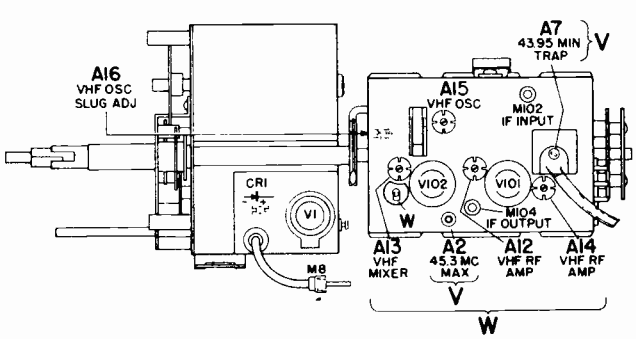

Figure 38. Top of Tuners, Showing VHF Adjustment Locations.

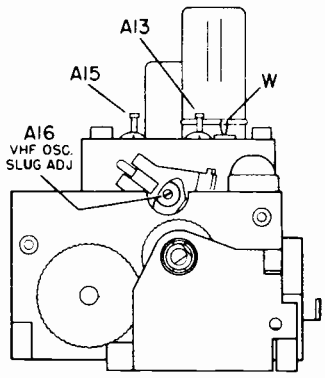

Figure 39. Front View of Tuner.

OVER-ALL VHF AND IF RESPONSE CURVE CHECK

Receiver Controls and Bias Battery	Sweep Generator	Marker Generator	Oscilloscope	Instructions
Contrast control fully to the left. Channel Selector on channel 10 or other unassigned high channel. Connect negative of 4½ volt bias battery to test point "T", positive to chassis.	Connect to antenna terminals. Set generator to sweep VHF channel selected. See frequency table on page 27. Keep generator output as low as possible, to prevent overloading.	If an external marker generator is used, loosely couple high side to sweep generator lead. VHF marker frequencies are shown in frequency table on page 18.	Connect to point "V" through a decoupling filter; see figs. 32, 33 and 34.	Compare the response curve obtained against the ideal curve shown in figure 40. If the curve is not within tolerance, touch up the IF slug as instructed below. It should never be necessary to turn slugs more than one turn in either direction. If the curve is satisfactory on the channel checked, all other channels should also be satisfactory. IMPORTANT: When sweep output is reduced, response curve amplitude on scope should also decrease, but curve shape should remain the same. If curve shape changes, reduce sweep output and/or the scope gain until the shape does not change.

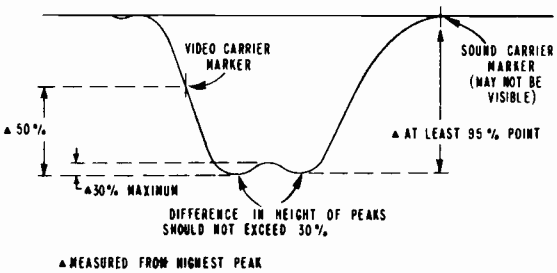

Note that video carrier (marker) on the "Over-all RF-IF Response Curve" will appear on the opposite side of the curve as compared to the "IF Response Curve" figure 36. This is due to action of the mixer tube.

Figure 40. Ideal Over-all VHF and IF Response Curve.

Curves must have approximate equal peaks and correct marker location. If it is necessary to adjust for approximate equal peaks and marker location, carefully adjust slug A2 and if necessary adjust slug A3. It should not be necessary to turn the slugs more than one turn in either direction.

Figure 41. Over-all RF and IF Response Curves, Incorrect Shape.

HORIZONTAL SYNC ADJUSTMENT

A receiver which requires horizontal sync adjustment can be corrected only by following in exact detail the step-by-step procedure given here.

Check whether adjustment is necessary by rotating the **Horizontal** control (A) on the front panel from one end to the other; the picture should hold as follows:

a. For strong or medium signals, the picture should remain in sync over the entire rotation of the **Horizontal** control. Horizontal sync adjustment is required if the picture falls out of sync, bends at the top (jitters), or doubles up on the side. See illustrations at upper right.

b. For weak or fringe area signals, the picture should remain in sync over ½ to ¾ of the rotation of the **Horizontal** control. Horizontal sync adjustment is required if the picture falls out of sync, bends at the top (jitters), or doubles up on the side. See illustrations below.

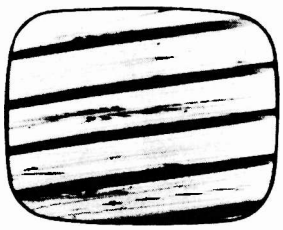

Picture Out of Horiz. Sync.

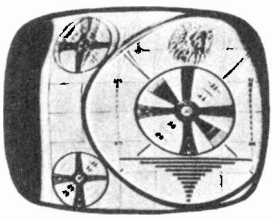

Bending or Jitter at Top.

Make Horizontal Sync Adjustment as follows:

1. Set the **DX Range Finder** at "0" position (see chassis illustrations) and set the **Contrast** control (on front panel) for normal picture.

2. Important: Before making these adjustments, be sure that the picture can be made to sync vertically (remain stationary up and down) as lack of both vertical and horizontal sync is an indication of trouble in the sync circuits. If replacement of tubes V303, V401, V403 does not eliminate sync trouble, check for other trouble in the sync circuits.

19T1, 19W1, 19W1A, 19L2, 19L2Z, 19M2, 19N2Z and 19R2

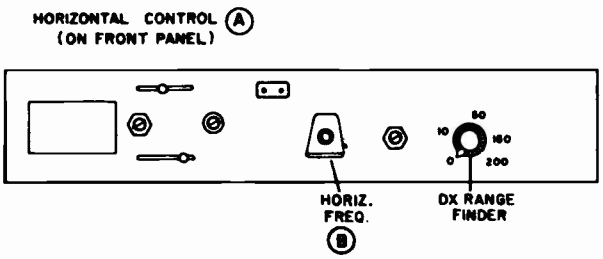

Figure 10. Rear View of Chassis Showing Horizontal Sync Adjustments.

3. With the picture in sync, rotate **Horizontal** control (A) on front panel from one end to the other. If picture does not hold sync as described in paragraphs "a" or "b" at left, set the **Horizontal** control (A) at the point where the picture just loses sync or becomes unstable, and slowly adjust the **Horizontal Frequency** (B) until the picture just falls back into sync. It may require several turns of adjustment (B). Repeat this procedure until the picture holds as described in paragraphs "a" or "b" at left. If the picture can be made to hold sync with adjustment of (B), adjustment is complete.

4. If horizontal sync is still unsatisfactory, carefully repeat entire procedure. Try replacing tube V403. It may be necessary to make Complete Horizontal Oscillator Alignment (using an oscilloscope).

COMPLETE HORIZONTAL OSCILLATOR ALIGNMENT

(Requires Oscilloscope)

1. IMPORTANT: Set the **DX Range Finder** at "0" position and set the **Contrast** control (on front panel) for normal picture.

2. Connect oscilloscope high side through a **10 mmfd. capacitor** to terminal marked "C" or "2" on the horizontal oscillator transformer T404 (see figure 11). It is important to use short leads and a very low capacity capacitor (at least 10 mmfd.) to avoid loading the circuit and thus distorting the waveform.

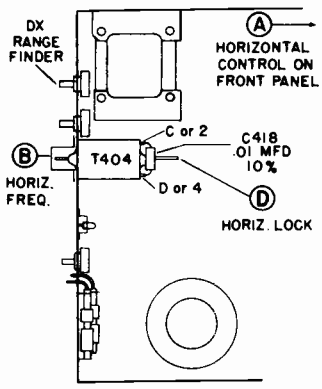

Figure 11. Bottom View of Chassis Showing Horizontal Sync Adjustments.

3. Set the oscilloscope sweep to 15.75 KC or a sub-multiple of it.

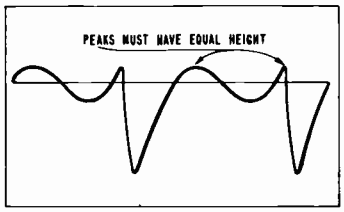

Figure 12. Horizontal Oscillator Waveform.

4. Adjust the **Horizontal Lock** slug (D) (see figure 11) until the oscilloscope waveform pattern appears as in figure 12. The rounded and pointed peaks of the waveform must have equal height. The picture must be kept in sync to obtain the proper oscilloscope waveform pattern. Keep the picture in sync by adjusting the **Horizontal Frequency** adjustment (B). If the picture still will not sync, check for a defective tube, components, or wiring, before continuing further.

5. Disconnect the oscilloscope leads.

6. Set the **Horizontal** control (A) fully counterclockwise to break sync. If the picture does not go out of sync, momentarily interrupt the channel selector, or adjust the **Horizontal Frequency** (B) until several bars appear sloping downward to the left (see figure 13), then adjust the **Horizontal Frequency** (B) until the picture falls back into sync.

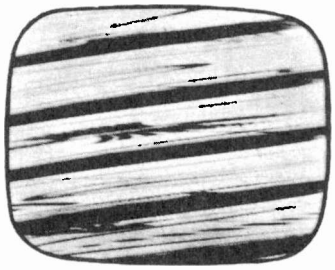

Figure 13. Picture Out of Horizontal Sync.

7. Rotate **Horizontal** control (A) on the front panel from one end to the other. The picture should hold sync as follows:

   a. For strong or medium signals, the picture should remain in sync over the entire rotation of the **Horizontal** control. If it falls out of sync, bends at the top (jitters), or doubles up on the side; sync adjustment is required; see step 8 below.

   b. For weak or fringe area signals, the picture should remain in sync over ½ to ¾ of the rotation of the **Horizontal** control. If it falls out of sync, bends at the top (jitters), or doubles up on the side; sync adjustment is required; see step 8 below.

8. If picture does not hold sync as described in paragraphs "a" or "b" above, set the **Horizontal** control (A) at the point where the picture just loses sync or becomes unstable and adjust the **Horizontal Frequency** (B) until the picture just falls back into sync. It may require several turns of adjustment (B). Repeat this procedure until the picture holds as described in paragraphs "a" or "b" of step 7.

TUNING CONTROL

Components on the underside of the tuner are easily accessible for replacement after removing three or four sets of channel coils. However, resistors R110 (15,000 ohms) and R116 (10,000 ohms) may be difficult to replace, since they are located under the stationary contact strip. If resistors R110 or R116 require replacement, it is suggested that the entire tuner be returned to the Admiral distributor for replacement.

RESISTOR CHANGED TO INCREASE HORIZONTAL SYNC

Run 6 in Television Only Receivers

Resistor R406 was changed from 18,000 ohms, ½ watt to 22,000 ohms, ½ watt in all television only receivers stamped Run 6 and higher.

This change was made to increase the amount of horizontal sync available at pin 1 of the sync clipper tube (V303B).

SERVICE HINTS

TROUBLE SHOOTING

The sound output tube V204 (6Y6G or 6AS5) functions as a voltage dropping tube in addition to being a sound output tube. The cathode of the sound output tube operates at approximately 140 volts above chassis ground for TV operation. If the sound output stage becomes defective, B+ voltage to the TV tuner, sync separator and clipper, video amplifier and AGC delay circuit will be affected.

It is important to note that the plate and screen voltages at the first and second IF amplifier stages V301 and V302, may vary over a wide range, depending on the strength of the TV signal. The voltages shown on the schematics are taken with the antenna disconnected and antenna terminals shorted; see Voltage Data on schematic pages.

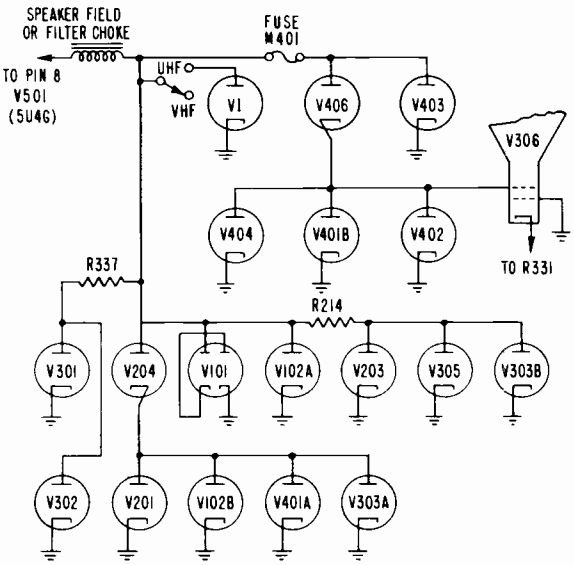

Figure 14. Basic B+ Distribution.

In the cascode VHF tuner, the triode sections of the RF amplifier (V101) are in series. The cathode of the second triode section is operated at approximately 120 volts above chassis ground. If the tube should become defective or be removed from the socket, there will be no B+ voltage on the plate of the first triode section.

B+ DISTRIBUTION IN TELEVISION CHASSIS

Figure 14 illustrates the basic B+ distribution used in these chassis. Note: There are variations in the B+ circuits of TV and combination models.

SERVICE HINTS FOR HORIZONTAL SYNC

The horizontal oscillator control circuit controls the horizontal oscillator by a method called "Pulse Width Modulation". This method is so called, because the width of the pulse applied to the grid of the horizontal oscillator control section determines the length of time that current flows through this section. The duration of current flow through the control section determines the DC control voltage applied to the grid of the horizontal oscillator, thereby controlling the frequency.

The waveshape applied to the grid of the horizontal oscillator control section is formed by combining a partially integrated pulse from the horizontal oscillator output and the horizontal sync pulse. If these two pulses combine properly, the waveshape shown in figure 15 will be developed and the horizontal oscillator will be in sync.

With no sync input, the waveform at the horizontal oscil-

Figure 15. Waveform on Grid Pin 1 of V403 With Sync Pulse.

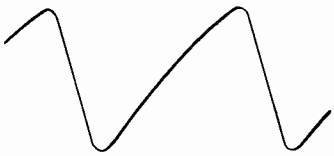

Figure 16. Waveform on Grid Pin 1 of V403 Without Sync Pulse.

lator control grid should appear as shown in figure 16. Since the horizontal oscillator control voltage is dependent upon a waveshape formed at the horizontal output stages (V404, V405 and V406), a defective component in one of these stages may cause sync trouble. If the waveform shown in figure 16 can be obtained, this will indicate proper operation of the horizontal sweep circuit.

When the horizontal oscillator is out of sync, it may be difficult to observe this waveform (figure 16) on an oscilloscope due to the presence of out-of-phase sync pulses. In this case, remove the sync separator and sync clipper tube V401. If the waveshape shown in figure 16 is obtained.

place the sync and separator tube back into its socket. Then, remove the horizontal oscillator and control tube V403 (6SN7GT). Conventional, well-shaped sync pulses should appear at control grid (pin 1) of V403.

If there are no sync pulses, or the pulses are of low or varying amplitude, accompanied with noise, the sync circuits should be checked. However, if the sync pulses are well-shaped and of constant amplitude, the horizontal oscillator may be misaligned. Place V403 back into its socket and make "Complete Horizontal Oscillator Alignment" given on page 20.

If it is impossible to sync the picture, or obtain the correct waveform at terminal "C", check for a defective component.

HORIZONTAL SYNC INSTABILITY

Horizontal sync instability occurring after the receiver has been operated for a short period of time, may be due to change in capacitor C418 (.01 mfd, 400 volts, paper, 10%). The slight change in capacity that occurs with temperature rise, may be enough to cause the circuit to become unstable. To minimize this possible trouble, a capacitor (with negative temperature coefficient) is used for capacitor C418, part number 64A2-16.

If capacitor C418 is suspected as being the cause of horizontal sync instability, it should be replaced only with a .01 mfd, 10%, paper capacitor, Admiral part number 64A2-16 or Sprague part number 68P8. Important: After replacing capacitor C418, it may be necessary to make "Complete Horizontal Oscillator Alignment" (using an oscilloscope) as instructed on page 20.

MISCELLANEOUS TROUBLE DUE TO FAULTY TUBES

Faulty tubes cause the majority of receiver troubles. The list below contains most common troubles which are generally due to faulty tubes.

a. Poor fringe area reception due to low B plus voltage. Check the 5U4G tube.

b. Poor fringe area reception due to low sensitivity. Check the 6BQ7A or 6BZ7 tube in VHF tuner.

c. Picture and sound separated due to IF oscillation. Check the 6CB6 and 6U8 tubes in IF amplifier.

d. Picture bending caused by leakage between tube elements. Check 6CB6 tube in IF amplifier.

e. Poor sync stability, usually more noticeable in vertical circuit. Check 6U8 and 12AU7 tubes (V303 and V401).

f. Washed out picture due to negative grid current. Check 6CB6 or 12BY7 tube (V305).

EXCESSIVE SNOW IN PICTURE DUE TO FAULTY TUBES

Excessive snow in the picture can be caused by faulty tubes in the receiver. Check receiver as follows:

Short circuit the antenna terminals and turn the Contrast control fully clockwise.

Connect a vacuum tube voltmeter from test point "V" to chassis. Set the channel selector on an unassigned channel. If the voltmeter reading exceeds .6 volt negative, excessive receiver (tube) noise is indicated. This condition can usually be corrected by tube substitution. Substitute tubes in the following order: Video detector tube V304, RF oscillator tube V102, RF amplifier tube V101 and IF amplifier tubes V301, V302 and V303.

Corona or arcing in the second anode supply can also cause a high noise reading at the video detector resulting in excessive snow in weak signal areas.

ELIMINATING RF INTERFERENCE BY ALIGNMENT OF 43.95 MC TRAP A7

Antenna trap L103 (adjustment A7, figures 32 and 34) is aligned for minimum response at 43.95 MC, see IF Amplifier and Trap Alignment on page 24. Trap L103 attenuates interfering signals in the 41 MC IF frequency range. The antenna trap should generally never require realignment in the field. However, if RF interference is experienced from radio transmitters or other sources at frequencies (harmonics or fundamentals) in the 41 MC range, the trap may be realigned to minimize the interference. The trap must be tuned when the interference appears. If the interference is intermittent, tuning the trap may be difficult.

To tune trap, use a non-metallic alignment wrench with a 5/16" hexagonal shank, part number 98A30-12. In some tuners a non-metallic alignment screwdriver with a 1/8" wide blade is required. Tune trap by observing the picture and adjusting slug A7 for minimum of interference. It should not be necessary to turn the slug A7 more than a few turns in either direction. IMPORTANT: Do not turn the slug completely counterclockwise as channel 2 interference may result.

IMPROVING UHF RECEPTION WHEN ONLY ONE OR TWO CHANNELS ARE RECEIVED

If only one or two UHF channels are being received, reception can often be improved by adjusting the oscillator trimmer which is located at the rear of the tuner; trimmer at lower right hand side. This is especially true if the UHF oscillator tube V1 (6AF4) has been changed and the channels are below 55.

Adjust trimmer while observing picture, tune trimmer for best picture with minimum of snow. Retune receiver and repeat adjustment.

REPAIRING KNOBS WITH METAL RIM

The metal rim of some television or radio tuning knobs may become loose and slip as the knob is rotated. To repair such knobs, merely punch an indentation in the rim of the knob using a center-punch (preferably automatic). As an alternative, a soldering iron can be used by applying the tip to the rear edge of the knob in order to flow the plastic into full contact with the metal rim.

It is recommended that the knobs be repaired rather than replaced, since there may be dimensional differences in some replacement knobs. Changes have been made to knobs of later production receivers to prevent slipping of the metal rim.

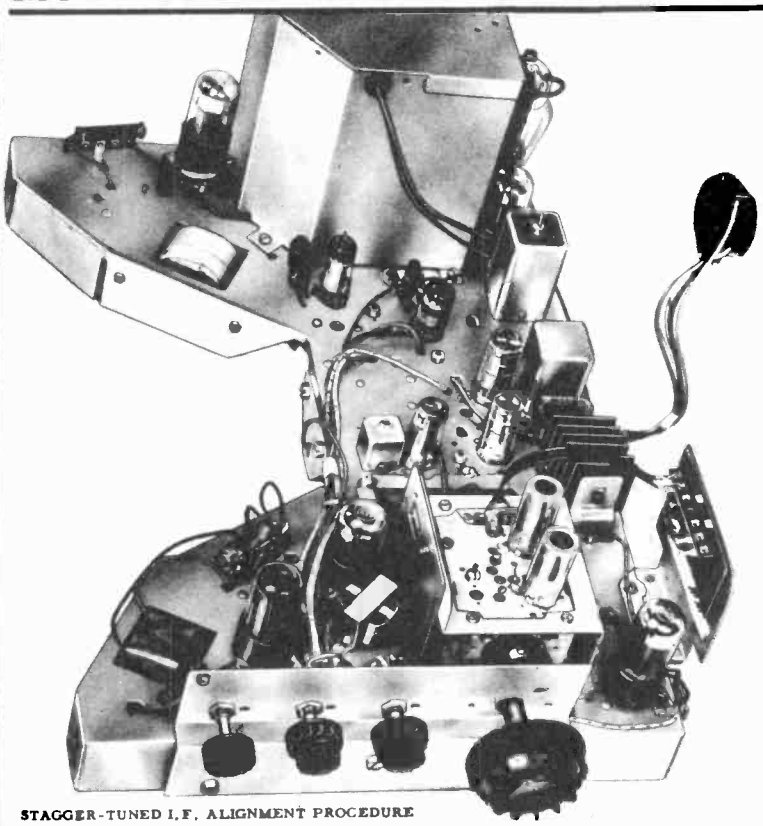

ARVIN INDUSTRIES, INC.

Chassis "E" -- 383

Models 21-554, -555, -557

(Circuit diagram on the next page, over.)

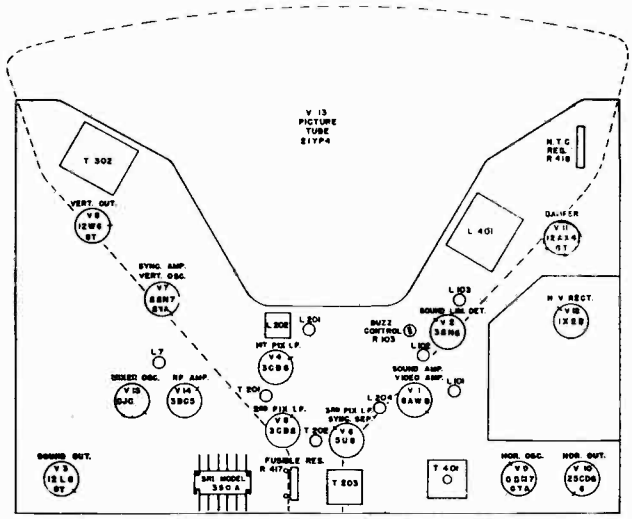

STAGGER-TUNED I.F. ALIGNMENT PROCEDURE

1. Set tuner to channel 9-10 or 11.
2. Connect variable bias supply to junction R211 & C207. Adjust bias for -2 volts.
3. Connect VTVM across R212. Isolate VTVM with 18K resistor. Use -5V scale.
4. Connect RF signal generator to mixer tube shield (V15 5J6). Lift mixer tube shield until it is just ungrounded.
5. Good R.F. grounding between TV receiver on test and test equipment is necessary. A metal surface bench top should be used to insure proper RF grounding. Use isolation transformer between chassis and AC line.

STEP	FREQUENCY	ADJUSTMENT	INSTRUCTIONS
1.	41.25 Mc	L201 for min.	
2.	42.9 Mc	Tuner coil for max.	L7 (top of tuner)
3.	45 Mc	L202 for max.	Recheck steps 2 and 3
4.	42.9 Mc	T201 for max.	
5.	45.3 Mc	T202 for max.	
6.	44 Mc	T203 for max.	
			Recheck steps 4, 5 and 6

OVERALL SWEEP CHECK

1. Connect RF signal generator to chassis near V4 for marker generator. Push shield down on mixer tube.
2. Connect oscilloscope across R212. Isolate oscilloscope lead with 300 μμf to ground and 18K resistor in series.
3. Increase bias to -2.5 volts
4. Connect sweep generator to antenna terminals. Adjust sweep generator & tuner to channel 10.

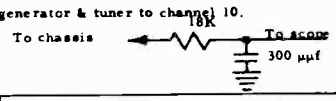

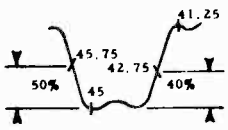

ADJUSTMENT	INSTRUCTIONS
T202 T201 T203	T202 positions 45.75 marker T201 positions 42.75 T203 adjusts tilt of curve
Note: If desired curve cannot be obtained, slight adjustment of tuner coil and L202 may be necessary.	

SOUND AND 4.5 MC TRAP ALIGNMENT

1. Tune in available TV station and reduce signal into set until hiss is heard with sound. This can be done by inserting an attenuator in the antenna lead-in or by removing antenna lead-in from the set and stray feeding in signal by placing lead-in in close proximity of the set.

2. Set buzz control in the middle of its range. Adjust take off coil (top L101), L102, Quadrature coil (L103) and buzz control for cleanest sound and minimum buzz. If any adjustment cause hiss to disappear reduce signal into set until hiss reappears and continue with adjustments.

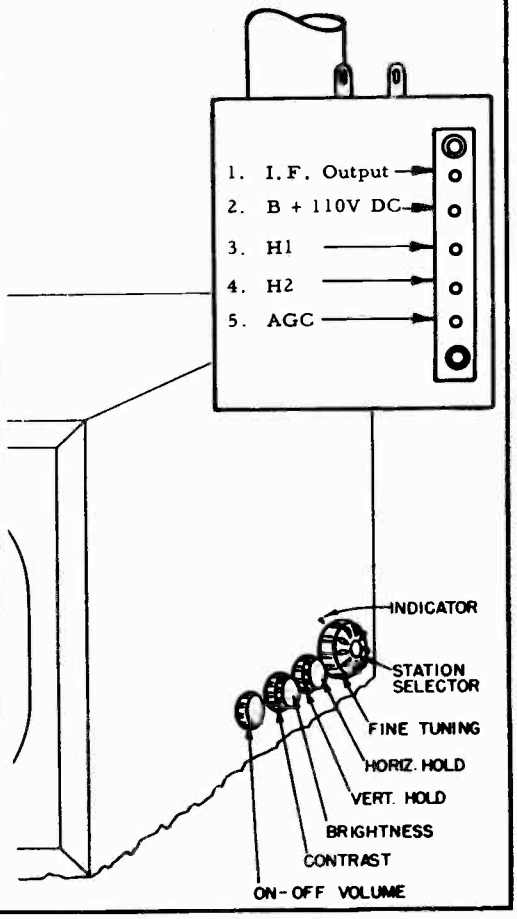

Arvin INDUSTRIES, INC. MODELS 21-554, 555, 557 CHASSIS "E"

"E" SERIES

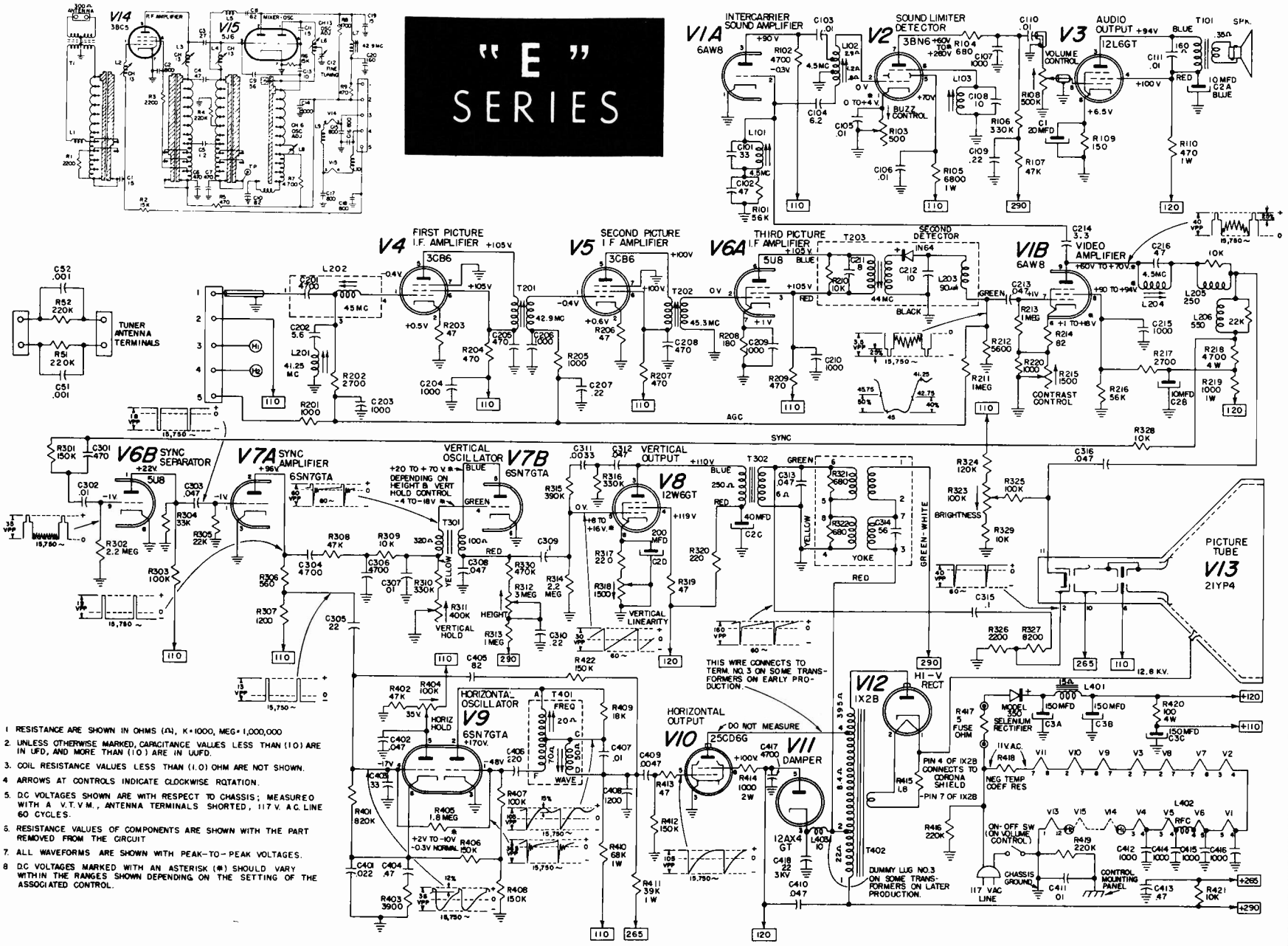

1. RESISTANCE ARE SHOWN IN OHMS (Ω), K=1000, MEG=1,000,000
2. UNLESS OTHERWISE MARKED, CAPACITANCE VALUES LESS THAN (10) ARE IN UFD, AND MORE THAN (10) ARE IN UUFD.
3. COIL RESISTANCE VALUES LESS THAN (1.0) OHM ARE NOT SHOWN.
4. ARROWS AT CONTROLS INDICATE CLOCKWISE ROTATION.
5. D.C VOLTAGES SHOWN ARE WITH RESPECT TO CHASSIS; MEASURED WITH A V.T.V.M., ANTENNA TERMINALS SHORTED, 117 V. A.C. LINE 60 CYCLES.
6. RESISTANCE VALUES OF COMPONENTS ARE SHOWN WITH THE PART REMOVED FROM THE CIRCUIT
7. ALL WAVEFORMS ARE SHOWN WITH PEAK-TO-PEAK VOLTAGES.
8. D.C VOLTAGES MARKED WITH AN ASTERISK (*) SHOULD VARY WITHIN THE RANGES SHOWN DEPENDING ON THE SETTING OF THE ASSOCIATED CONTROL.

ARVIN TELEVISION MODELS 21-550, 551, 552, 553

CHASSIS "D" 379-UHF, "D" 382-VHF

"D" SERIES

(Circuit diagram is printed on page 30.)

Arvin INDUSTRIES, INC.

STAGGER-TUNED I.F. ALIGNMENT PROCEDURE

1. Set tuner to channel 9-10 or 11.
2. Pull AGC tube V10 out
3. Connect variable bias supply to junction R304 & R306. Adjust bias for -2 volts junction R202 & R205.
4. Connect VTVM across R212. Isolate VTVM with 18K resistor. Use -5V scale.
5. Connect RF signal generator to mixer tube shield (V20 6X8). Lift mixer tube shield until it is just ungrounded.
6. Good R.F. grounding between TV receiver on test and test equipment is necessary. A metal surface bench top should be used to insure proper RF grounding.

STEP	FREQUENCY	ADJUSTMENT	INSTRUCTIONS
1.	39.75 mc	Top L202 for min.	
2	47.25 mc.	Top L201 for min.	Outer peak
3.	41.25 mc.	Top T201 for min.	Outer peak
4.	42.9 mc.	Tuner coil for max.	
5.	45.2 mc.	Bottom T201 for max.	Outer peak--recheck steps 4 and 5.
6.	42.1 mc.	Top T202 for max.	Outer peak
7.	45.7 mc.	Top T203 for max.	Outer peak
8.	44.1 mc.	Bottom T204 for max.	Recheck steps 6, 7 and 8

OVERALL SWEEP CHECK

1. Connect RF signal generator to chassis near V4 for marker generator. Push shield down on mixer tube.
2. Connect oscilloscope across R212. Isolate oscilloscope lead with 300 μμf to ground and 18K resistor in series.
3. Increase bias to -3.5 volts at junction R202 & R205.
4. Connect sweep generator to antenna terminals. Adjust sweep generator & tuner to channel 10.

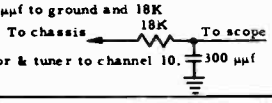

CURVE

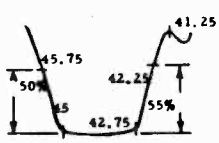

ADJUSTMENT	INSTRUCTIONS
T203 T202 T204	T203 positions 45.75 marker T202 positions 42.25 T204 adjusts tilt of curve

Note: If desired curve cannot be obtained, slight adjustment of tuner coil and bottom T201 may be necessary.

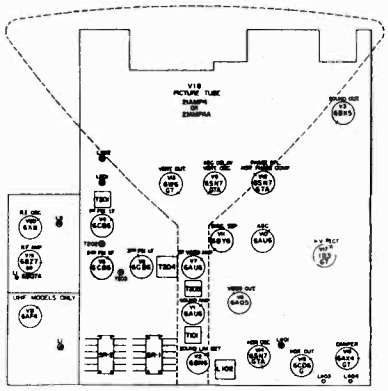

SOUND AND 4.5 MC TRAP ALIGNMENT

1. Tune in available TV station and reduce signal into set until hiss is heard with sound. This can be done by inserting an attenuator in the antenna lead-in or by removing antenna lead-in from the set and stray feeding in signal by placing lead-in in close proximity of the set.

2. Set buzz control in the middle of its range. Adjust take off coil (top T205), top and bottom T101, Quadrature coil (L102) and buzz control for cleanest sound and minimum buzz. If any adjustment cause hiss to disappear reduce signal into set until hiss reappears and continue with adjustments.

Note: If difficulty is encountered either in reducing signal sufficiently or adjustments being very broad. The following proceedure may be used.

STEP	EQUIPMENT	CONNECTION	FREQUENCY	ADJUSTMENT	INSTRUCTIONS
1.	Det. jig *	Input of jig to pin 2 of V2			Keep lead between 15K resistor and pin 2 as short as possible
2.	VTVM	Output of jig	Tune in available channel	T205 Top (only), T101 (top and bottom) for max.	
3.		Remove jig	Same	Quadrature coil (L102) for max. sound	Set buzz control in middle of its range before adjusting L102
4.			Same	Buzz control for minimum buzz	Correct adjustment of buzz control is approx. middle of its range
5.	Det. jig *	Junction C321 and R333			Connect VTVM to output of jig
6.	RF signal generator	Pin 1 (V7)	4.5 mc	Tune 4.5 mc trap Bottom T205 for min.	

*Detector jig

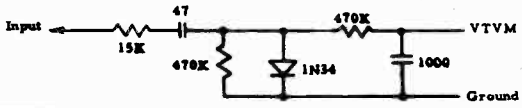

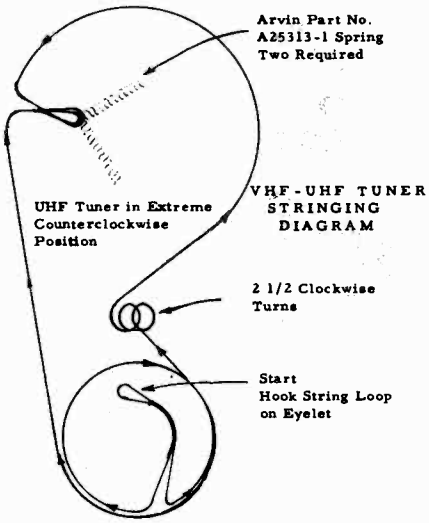

Arvin

MODELS 21-550, 551, 552, 553

CHASSIS "D" 379-UHF, "D" 382-VHF

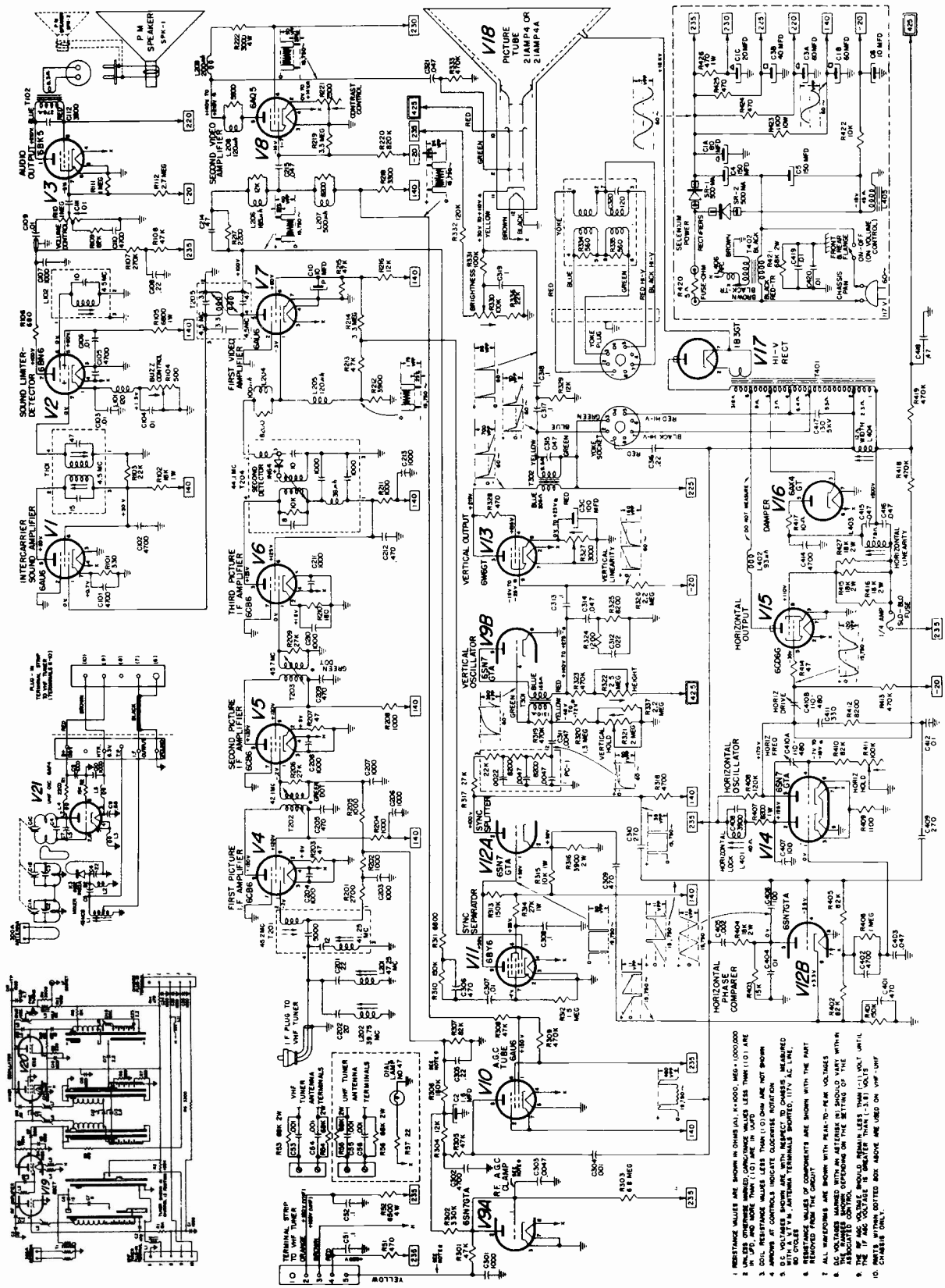

1. RESISTANCE VALUES ARE SHOWN IN OHMS (Ω), K=1000, MEG=1,000,000
2. UNLESS OTHERWISE MARKED, CAPACITANCE VALUES LESS THAN (1.0) ARE IN MICRO-MICRO FARADS (μμf), AND ABOVE (1.0) ARE IN MICROFARADS (μf)
3. COIL RESISTANCE VALUES LESS THAN (1.0) OHM ARE NOT SHOWN
4. ARROWS AT CONTROLS INDICATE CLOCKWISE ROTATION
5. D.C. VOLTAGES SHOWN ARE WITH RESPECT TO CHASSIS, MEASURED WITH A 20,000 Ω/V M. ANTENNA TERMINALS SHORTED, 117V A.C. LINE, AND CONTROLS
6. RESISTANCE VALUES OF COMPONENTS ARE SHOWN WITH THE PART REMOVED FROM THE CIRCUIT
7. ALL WAVEFORMS ARE SHOWN WITH PEAK-TO-PEAK VOLTAGES
8. D.C. VOLTAGES MARKED WITH AN ASTERISK (*) SHOULD VARY WITH IN THE INDICATED SHOWN, DEPENDING ON THE SETTING OF THE CONTROL, OR SIGNAL
9. THE R.F. AGC VOLTAGE SHOULD REMAIN LESS THAN (-1) VOLT UNTIL THE I.F. AGC VOLTAGE IS GREATER THAN (-3.5) VOLTS
10. PARTS WITHIN DOTTED BOX ABOVE ARE USED ON VHF-UHF CHASSIS ONLY.

CAPEHART-FARNSWORTH COMPANY

A DIVISION OF INTERNATIONAL TELEPHONE & TELEGRAPH CORPORATION

Capehart

"CX-37" SERIES
TELEVISION RECEIVER CHASSIS

CHASSIS IDENTIFICATION

CX-37 Series—(Early Version)

Chassis Number	CRT Size	Remarks
CT75	17" Rect.	Described on page 33, in 1953 Television
CT77	21" Rect.	
CT81	21" Rect.	Servicing Manual (Supreme Publications).

CX-37 Series—(With Hinged Secondary Control Cover)

CT89	17" Rect.	
CT90	21" Rect.	
CT115	21" Rect.—Aluminized	
CT133	21" Rect.—Aluminized	Less Audio, used with separate radio chassis
CT95	24" or 27" Rect.	90° Deflection—6AV6 and 6AQ5 Audio Circuit
CT130	24" Rect.	90° Deflection—6BK5 Audio Circuit

CX-37-1 Series—(With 82 Channel UHF/VHF Tuner and Hinged Secondary Control Cover)

CT110	17" Rect.	
CT108	21" Rect.	
CT116	21" Rect.—Aluminized	
CT134	21" Rect.—Aluminized	Less Audio, used with separate radio chassis
CT112	24" or 27" Rect.	90° Deflection—6AV6 and 6AQ5 Audio Circuit
CT131	24" Rect.	90° Deflection—6BK5 Audio Circuit

For alignment information please see pages 33 and 36, in the 1953 Television Manual.

General Description

The Capehart CX-37 Series TV chassis are all basically the same. These chassis are composed of two sections; the front section referred to as the RF-IF Chassis and the rear section, the Deflection Chassis. The RF-IF chassis bolts to the Deflection chassis providing a basic 21 tube chassis including the picture tube and two rectifiers. The chassis features a tilted IF strip for ease in adjustment and replacing of tubes. Complete isolation is obtained between these sections with all connections being made by a male plug inserted into the receptacle provided on the deflection chassis.

The front portion of the RF-IF Unit forms a solid mount for the picture tube while the H.V. Section serves as a rear mount for the CRT and Deflection Yoke. The H.V. Section is a separate unit which is easily removable from the chassis for servicing. There are three basic versions of each the CX-37, CX-37R and CX-37-1 TV series chassis. A chart has been provided which lists the various versions as well as the information necessary to determine the correct chassis. The chassis can be identified by stamping on the chassis rear apron which can be either "CX-37", "CX-37R" or "CX-37-1".

The latest additions to the Capehart CX-37 and CX-37-1 Series Instruments are those employing the "90° Deflection" 24" and 27" Rectangular Picture Tubes. The chassis employed in these models is similar to the basic chassis with exception of the deflection circuits which have been modified for the 90° deflection angle tubes. The basic changes in the chassis itself are:

(1) The addition of a second 5U4G Rectifier.
(2) Revision of the Horizontal Output and H.V. Rectifier circuit by use of a 6CD6G tube as Horizontal Output, an improved Horizontal Flyback Trans. and two 6AX4GT tubes as Dampers. These changes provide the additional scan necessary and 20KV of Second Anode Voltage.
(3) The use of a 6AV5GT tube as Vertical Output.
(4) The addition of an external magnetic (PM) focuser for use with magnetically focused 24CP4 and 27GP4 Picture Tubes.

In addition to these changes the chassis used in higher priced 24" and 27" models incorporate an improved audio circuit using a 6AV6 1st audio stage and 6AQ5 audio output stage with a continuously variable tone control. 24" models in the lower price bracket use the standard CX-37 audio circuit employing the 6BK5 audio output.

Chassis-Model Cross Reference

Model	Chassis
1T174MS	CT-126
1T174BS	CT-126
1T174M-1	CT-110
1T174B-1	CT-110
1T174MS-1	CT-127
1T174BS-1	CT-127
2T214M-1	CT-108
2T214B-1	CT-108
2T214MD	CT-115
2T214MD-1	CT-116
2T214MS	CT-128
2T214BS	CT-128
2T214MS-1	CT-129
2T214BS-1	CT-129
4C174M-1	CT-110
4C174MD	CT-99
4C174MS	CT-99
4C174MS-1	CT-110
5C214M	CT-121
5C214B	CT-121
5C214M-1	CT-123
5C214B-1	CT-123
5C214MD	CT-115
5C214MD-1	CT-116
7H214M	CT-121
7H214B	CT-121
7H214M-1	CT-123
7H214B-1	CT-123
9F214MD	CT-115
9F214MD-1	CT-116
9F214BD	CT-115
9F214BD-1	CT-116
11F244M	CT-95
11F244M-1	CT-112
11F244B	CT-95
11F244B-1	CT-112
12F274M	CT-95
12F274M-1	CT-112
15W214MD-1	CT-134
15W214BD-1	CT-134
16T244M	CT-95
16T244M-1	CT-112
16T244MS	CT-130
16T244MS-1	CT-131
16T244BS	CT-130
16T244BS-1	CT-131
16T244ES	CT-130
16T244ES-1	CT-131
18W214FD-1	CT-134
19C214M	CT-143
19C214M-1	CT-144
19C214MD	CT-145
19C214MD-1	CT-146

MS—Mahogany Floratone BS—Bisque Floratone M—Mahogany B—Bisque
MD—Highly Polished Mahogany BD—Highly Polished Bisque FD—Highly Polished Fruitwood.

CAPEHART "CX-37" & "CX-37-1" SERIES TV

(17"-21" CRT Version)

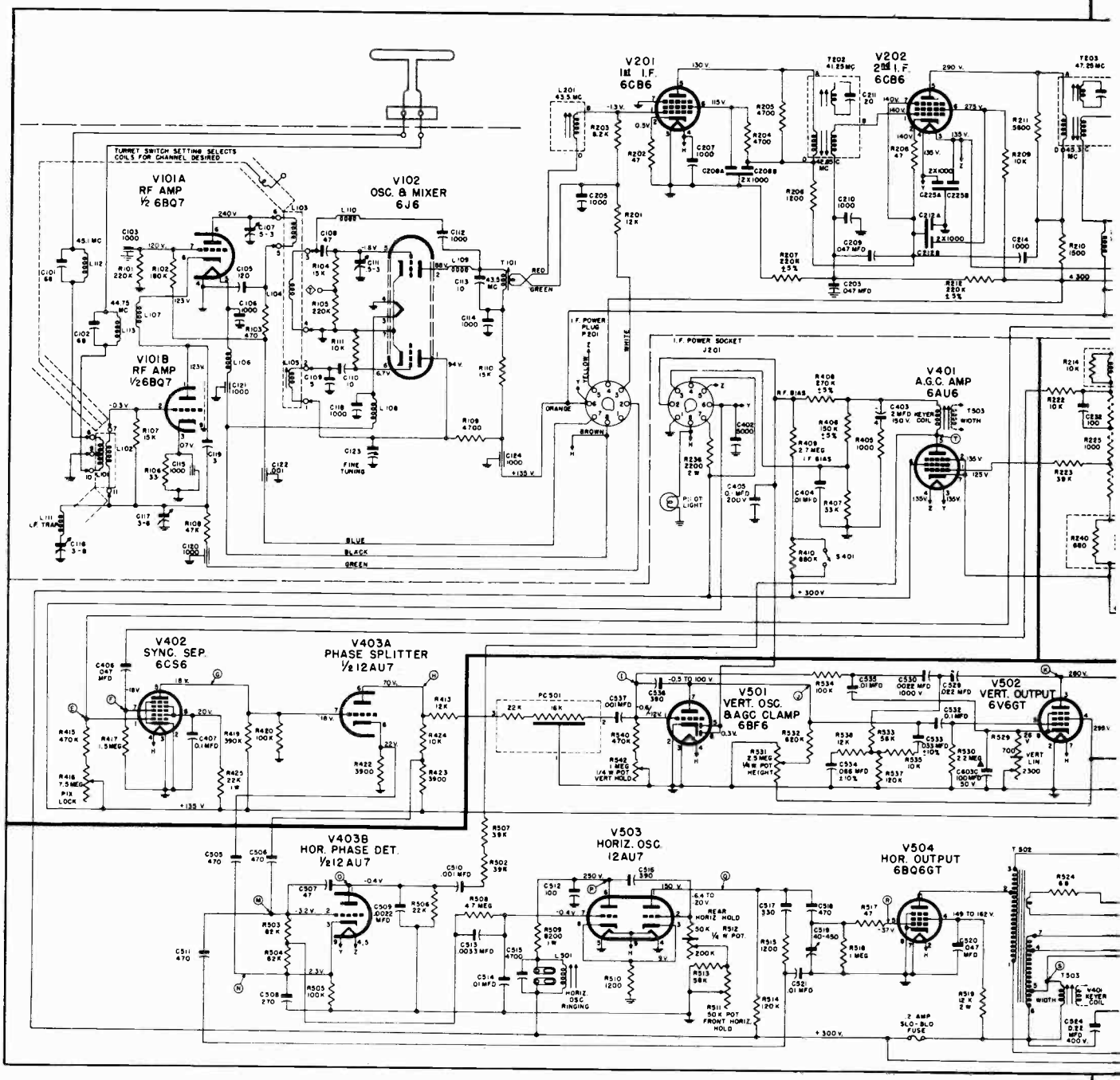

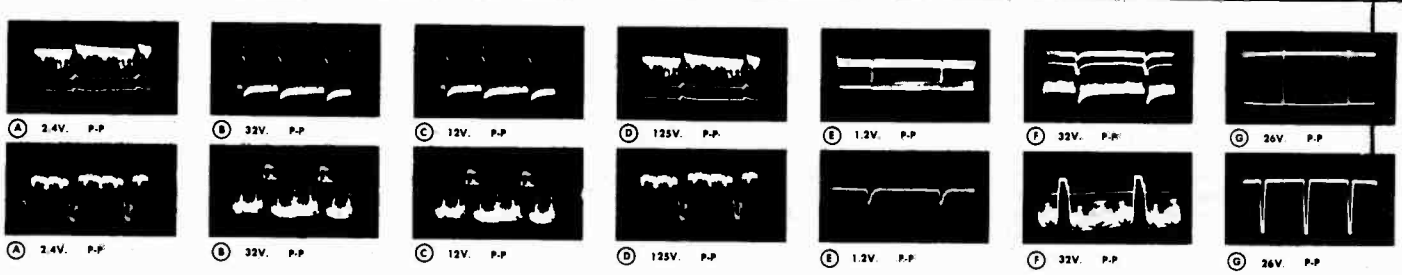

MOST-OFTEN-NEEDED 1955 TELEVISION SERVICING INFORMATION

Capehart

"CX-37" SERIES
TELEVISION RECEIVER CHASSIS

(Continued on Next Page)

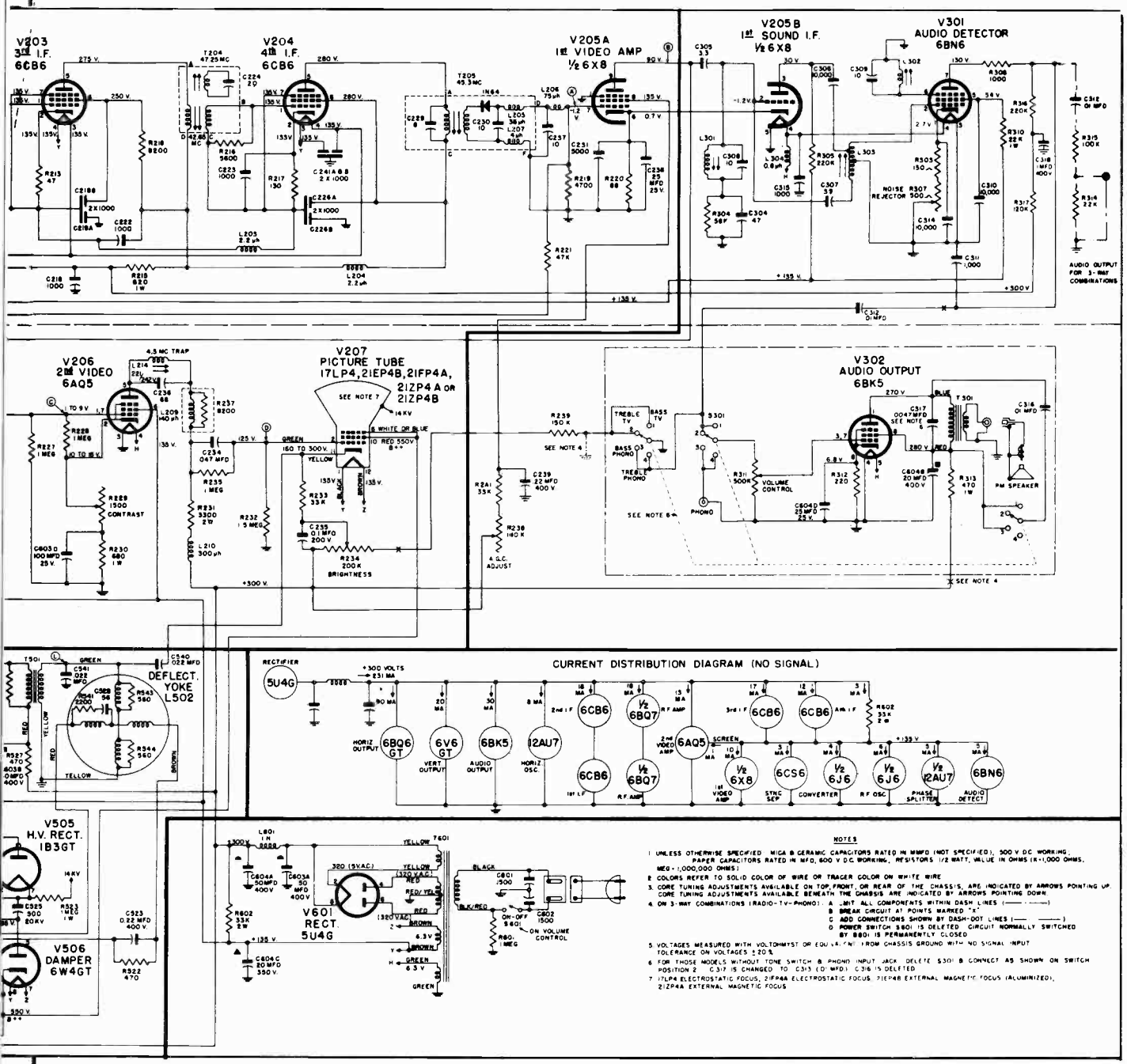

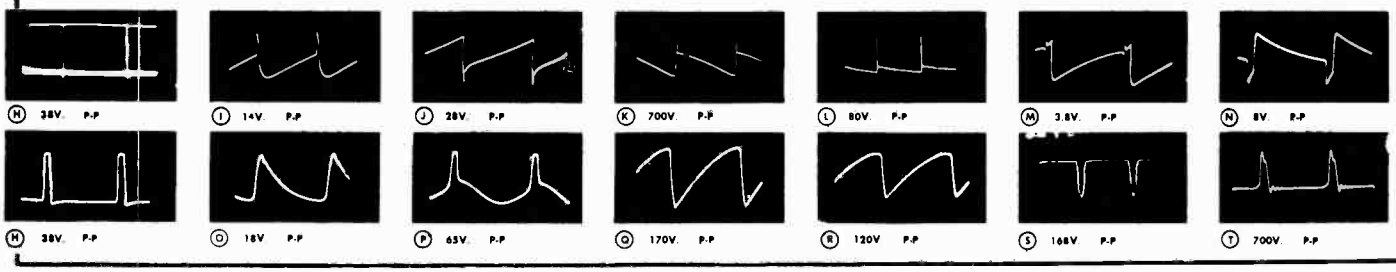

Capehart **TROUBLE-SHOOTING NOTES ON THE CX-37 SERIES TV CHASSIS** (Continued)

Picture Circuits

No Picture, No Sound, Raster Present

Use oscilloscope to trace video signal. If video is not present at output of Video Detector check:

(A) R-F Tubes V101 and V102 or I-F tubes V201, 202, 203 and 204.
(B) Video Detector Crystal (IN64) and associated components.
(C) Voltage Readings on all R-F and I-F tubes.
(D) Plate and Screen load resistors and by pass capacitors in R-F and I-F Stages.

If video signal at Video Detector is normal check:

(A) Voltage readings on 1st Video Amp. (½ 6X8) V205B.
(B) Resistors R219, R220, R224, R225 and R226.
(C) Peaking Coil L206 for open.

Horizontal Sync—AFC and Sweep Circuits

1. Loss of Horizontal Sync:
   If Vertical Sync is critical also check:
   (A) Sync Sep. 6BE6 or 6CS6 (V402) and Phase Splitter, 12AU7 (V403) tubes.
   (B) Sync Coupling Capacitors C406 and C408. (Note: C408 not used in chassis coded "D-3" or later.)
   (C) Open Resistors R222, R419, R418, R422, R423 or R424.
   If Vertical Sync is normal check:
   (A) Open Capacitors, C510 or C506.
   (B) Open Resistors R505, R502 or R507.
2. "Jittery" Horizontal Sync:
   Check:
   (A) Horiz. Phase Det., 12AU7 (V403B) tube.
   (B) Value of resistors R503, R504 and R508.
   (C) Capacitor C513 for open.
3. Extreme Horiz. Sweep Distortion (Picture Distorted — Horiz. Sync critical).
   Check:
   (A) Horiz. Phase Det. 12AU7 (V403B) and Horiz. Osc., 12AU7 (V503) tubes for Heater to Cathode leakage.
4. Three Overlapping Pictures (Horiz. Osc. frequency too high).
   If adjustment of Horiz. Osc. cannot correct condition, check:
   (A) Horiz. Osc., 12AU7 (V503) tube by substitution.
   (B) Capacitor C517 for open.
   (C) Resistor R515 for open.
5. Tearing at top of Picture.
   If adjustments of Horiz. Osc., AGC and Pix Lock Control do not correct condition, check:
   (A) Capacitor C515 for open.
6. No Raster — No High Voltage.
   Use oscilloscope to check waveform at grid (pin 5) of Horiz. Output 6BQ6GT (V504). If waveform is normal, check:
   (A) Horiz. Output 6BQ6GT (V504), H. V. Rectifier 1B3GT (V505) and Damper 6W4GT (V506) tubes.
   (B) H. V. Circuit fuse (.2 amp.) for open.
   (C) Horiz. Winding of Defl. Yoke and Horiz. Output Trans. (T502) for open.
   (D) Parallel Resistor R522 and Capacitor C523 for open.
   (E) 6BQ6GT Screen Load Resistor R519 for open.
   If waveform at grid (pin 5) of 6BQ6GT (V504) is not normal, check:
   (A) Horiz. Osc., 12AU7 (V503) tube.
   (B) Coupling Capacitor C518 and Resistor R517 for open.
   (C) Horiz. Osc. plate load resistors R509 and R514 for open.
   (D) Horiz. Ringing Coil L501 for open. Also check values of other components in Horiz. Osc. circuit.
7. Insufficient Horiz. Sweep.
   If condition cannot be corrected by adjustment of Horiz. Drive and Width, check:
   (A) Horiz. Osc. 12AU7 (V503), Horiz. Output 6BQ6GT (V504) and Damper 6W4GT (V506) tubes.
   (B) Voltage readings on Horiz. Osc. 12AU7 and Horiz. Output 6BQ6GT.
   (C) Value of Capacitor C524 in. Damper circuit, also capacitors C518, C517 and other components in Horiz. Osc. circuit.
   (D) Capacitor C520 for open.
8. Insufficient Horiz. Sweep with Foldover on Right Side.
   Check:
   (A) Capacitor C518 for leakage.
9. Horiz. Foldover in Center of Picture.
   Check:
   (A) Capacitor C520 for leakage.
10. Trapezoidal Raster-Horiz. Sweep Decreased.
    Check:
    (A) Horiz. Winding of Defl. Yoke for partial short.
    (B) Capacitor C528 (across ½ of yoke winding) for short.

Vertical Sync and Sweep Circuits

1. Loss of Vertical Sync or Critical Hold.
   Use oscilloscope to check sync signal at grid (pin 1) of Vertical Osc., 6BF6 (V501). If sync signal is normal, check:
   (A) Values of capacitors C534, C530, C535, C529, Resistors R540 and R542 and other components in Vertical Osc. circuit.
   If sync signal is not normal, check:
   (A) Sync Separator 6BE6 or 6CS6 (V402) and Phase Splitter ½12AU7 (V403A) tubes by substitution.
   (B) Voltage readings and waveforms in Sync Separator and Phase Splitter circuits.
   (C) Integrating Network (PC501).
   (D) Coupling Capacitors C408 and C537 for open.
   (E) Resistor R413 for open.
2. Loss of Vertical Sweep
   Check:
   (A) Vertical Oscillator 6BF6 (V501) and Vert. Output 6V6 (V502) tubes by substitution. Use oscilloscope to check waveform at plate (pin 3) of Vertical Output, 6V6 (V502). If waveform is normal, check:
   (A) Vertical Winding of Deflection Yoke.
   (B) Vertical Output Transformer T501.
   (C) Capacitor C541 for short.
   If waveform is not normal, check:
   (A) Voltage Reading in Vertical Osc. (V501) and Vertical Output (V502) circuits.
   (B) Vertical Output Transformer T501 for open primary.
   (C) Resistors R527, R529, R531, R532, Capacitors C603B, C530, C532, C536 for open also check other components in Vertical Osc. circuit.
3. Insufficient Vertical Scan
   Use oscilloscope to check waveform at plate (pin 3) of Vertical Output, 6V6 (V502). If waveform is normal, check:
   (A) Vertical Winding of Deflection Yoke for partial short.
   (B) Vertical Output Transformer T501 for partial short.
   (C) Capacitor, C541 for leak.
   If waveform is not normal, check:
   (A) Vertical Osc., 6BF6 (V501) and Vertical Output, 6V6 (V502) tubes by substitution.
   (B) Voltage readings on V501 and V502.
   (C) Capacitor C603C for open.
   (D) Capacitors C529, C530, C532, Resistors R527, R529, R531, R532 and other components associated with V501 and V502.
4. Extreme compression of Scan Lines at Bottom with Stretching at top.
   Check:
   (A) Adjustments of Vert. Hold, Linearity and Height.
   (B) Capacitor C534 for open.
5. Vertical Foldover at top—poor Vert. Linearity.
   Check:
   (A) Value of Resistor, R535 and Capacitor, C533.
6. Two Pictures Vertically—Linearity Distorted.
   Adjust Vertical Hold to stop roll, check:
   (A) Capacitor C529 for leakage.
7. Vertical Scan Reduced with Stretching at Top.
   Check:
   (A) Adjustment of Vert. Hold, Linearity and Height.
   (B) Capacitors C534 and C533 for change in value.

CBS-Columbia

Chassis	Models
921-11	U22C05, U22C07, U22C07B, U22T09, U22T09B, U22T09EB
921-13	U22T19, U22T19B
921-14	22C09, 22C09B, 22T19, 22T19B

The service material on this page and the next three pages is exact for chassis listed above. The additional chassis 921-12 and 921-94, used in models listed below, are very similar in most respects to chassis covered. Different tuners are used, and other types of 21" picture tubes may be employed.

Chassis	Models
921-12	22T09, 22T09B, 22T09EB, 22C07B, 22C07, 22C05
921-94	23C49L, 23C49LB, 23C59 23C59B, 23C49S, 23C49SB

PICTURE TUBE HANDLING PRECAUTIONS

The picture tube encloses a high vacuum and with the large surface area of glass involved, the stresses set up, particularly at the front rim of the tube, are considerable. An abnormal handling stress, accidental blow at a highly stressed surface, or even a scratch on the surface of the tube could cause it to implode or collapse with destructive violence.

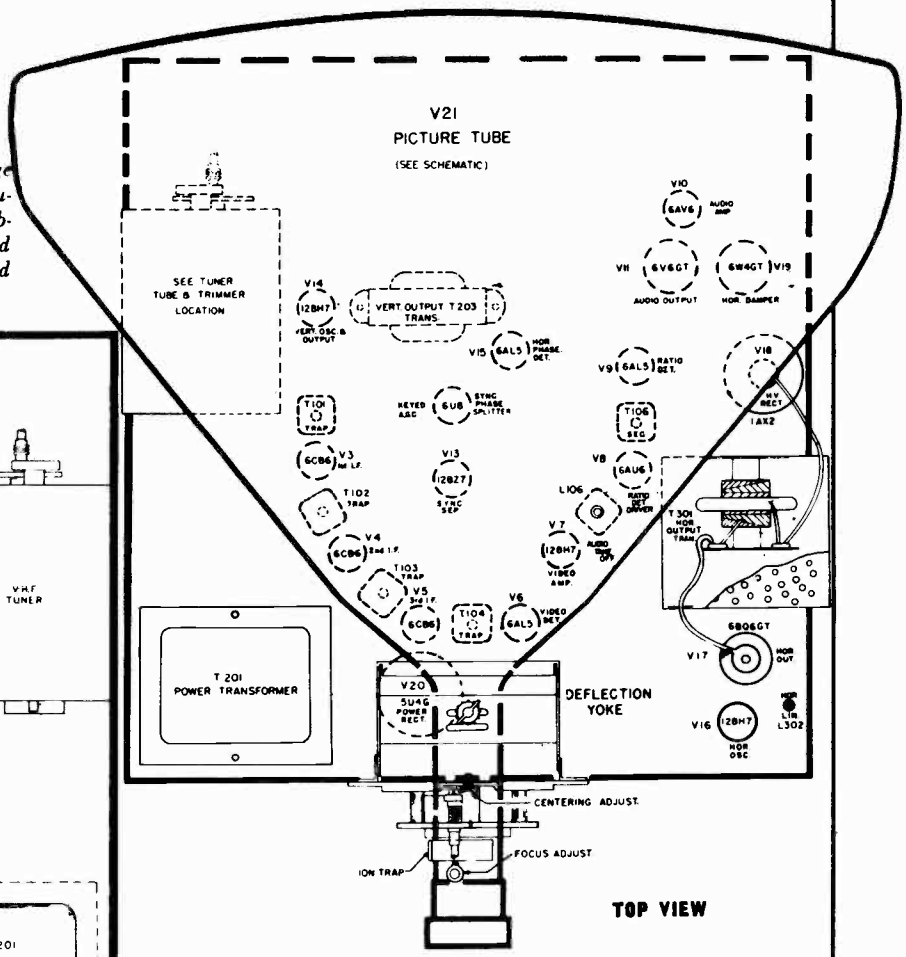

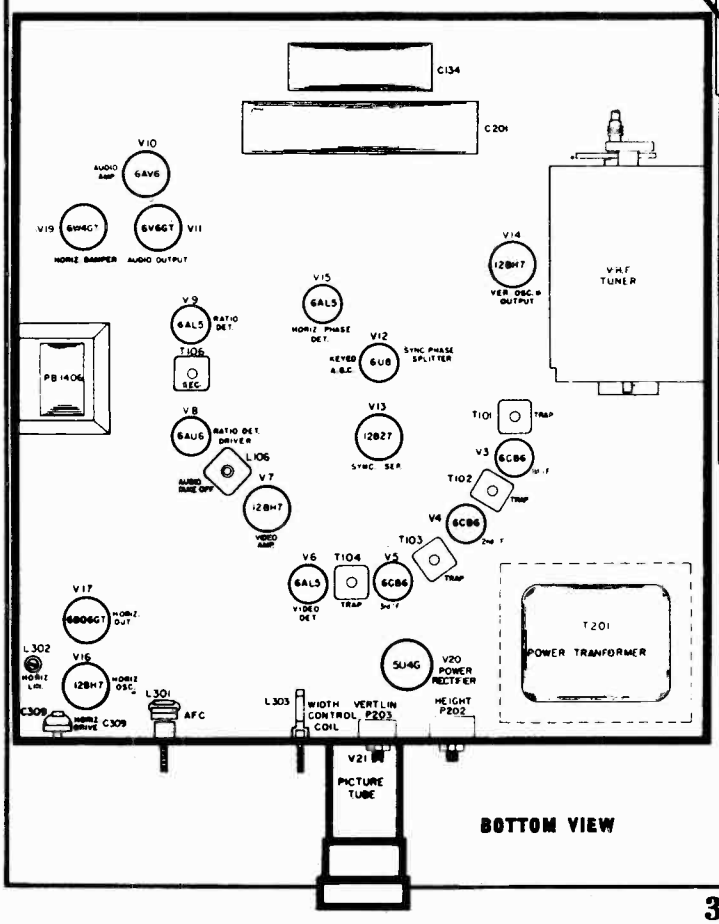

HIGH VOLTAGE WARNING

Operation of this receiver outside the cabinet or with covers removed involves a shock hazard from the receiver power supplies. Work on the receiver should not be attempted by anyone who is not thoroughly familiar with the precautions necessary when working on high voltage equipment.

CBS - Columbia Circuit Diagram for Chassis

921-11, 921-13 and 921-14

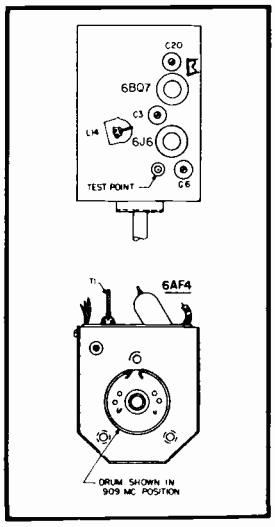

921-11 & 13 TUNERS

(These connections are made to tuners employed.)

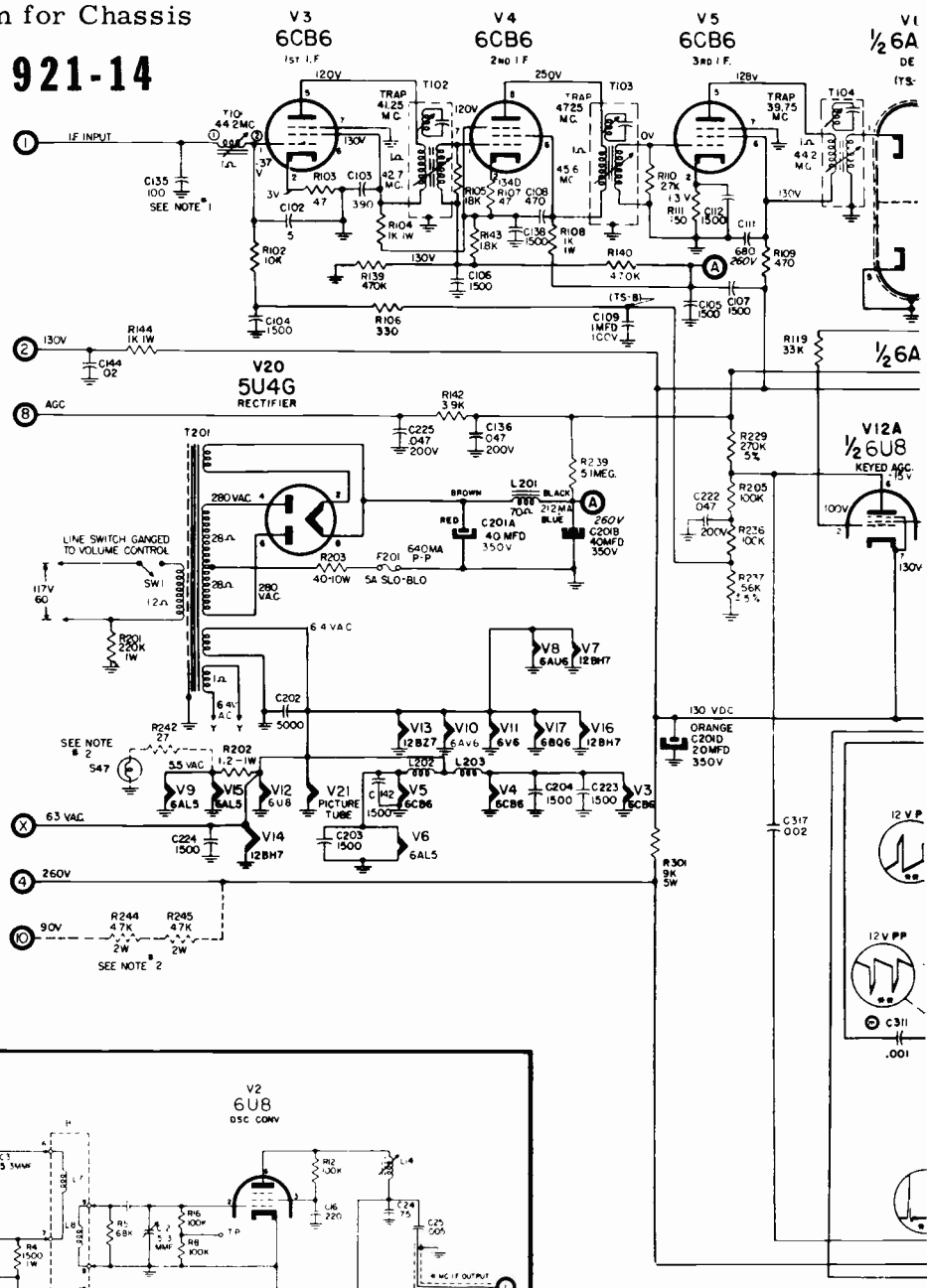

NOTES

1. C135 is 180 MMF. part #23004650 in 921-11 & 13 chassis
2. R244, R245, R242 and S47 are used only in 921-11 & 13 chassis.
3. R307 is 22K, 1W in some chassis.
4. Unless otherwise noted:
   - Capacitors marked less than 1 are in mfd
   - Capacitors marked more than 1 are in mmf.
   - Capacitors are rated at 600 V.
   - Resistors are in ohms.
   - All resistors ½ Watt.
   - DC voltages measured with a VTVM between socket terminals and ground.

*Indicates scope synced at vertical sweep rate.
**Indicates scope synced at horizontal sweep rate.

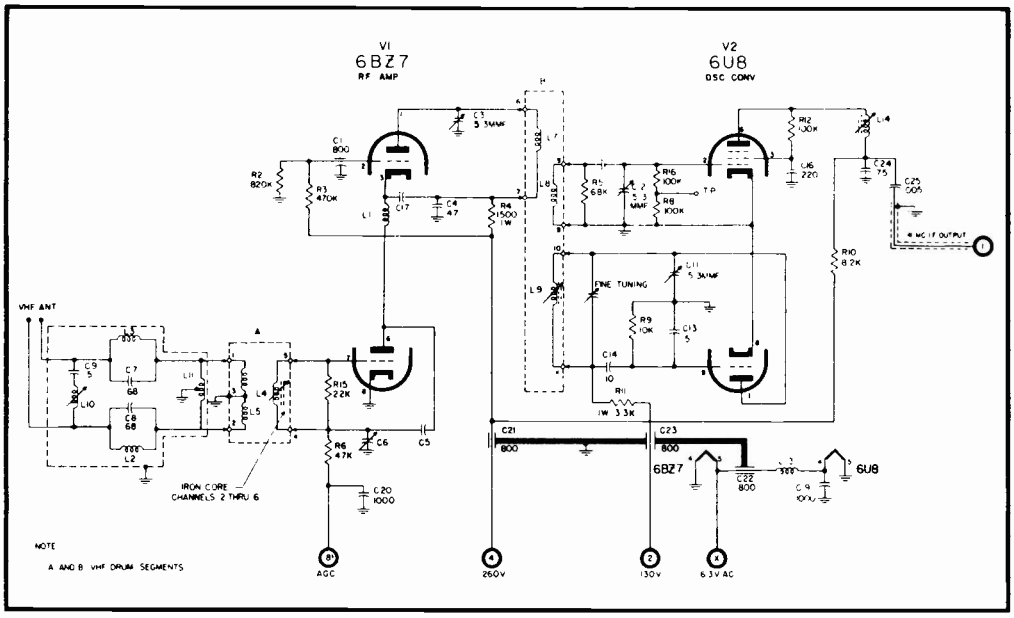

TUNER 69000591 USED IN 921-14

MOST-OFTEN-NEEDED 1955 TELEVISION SERVICING INFORMATION

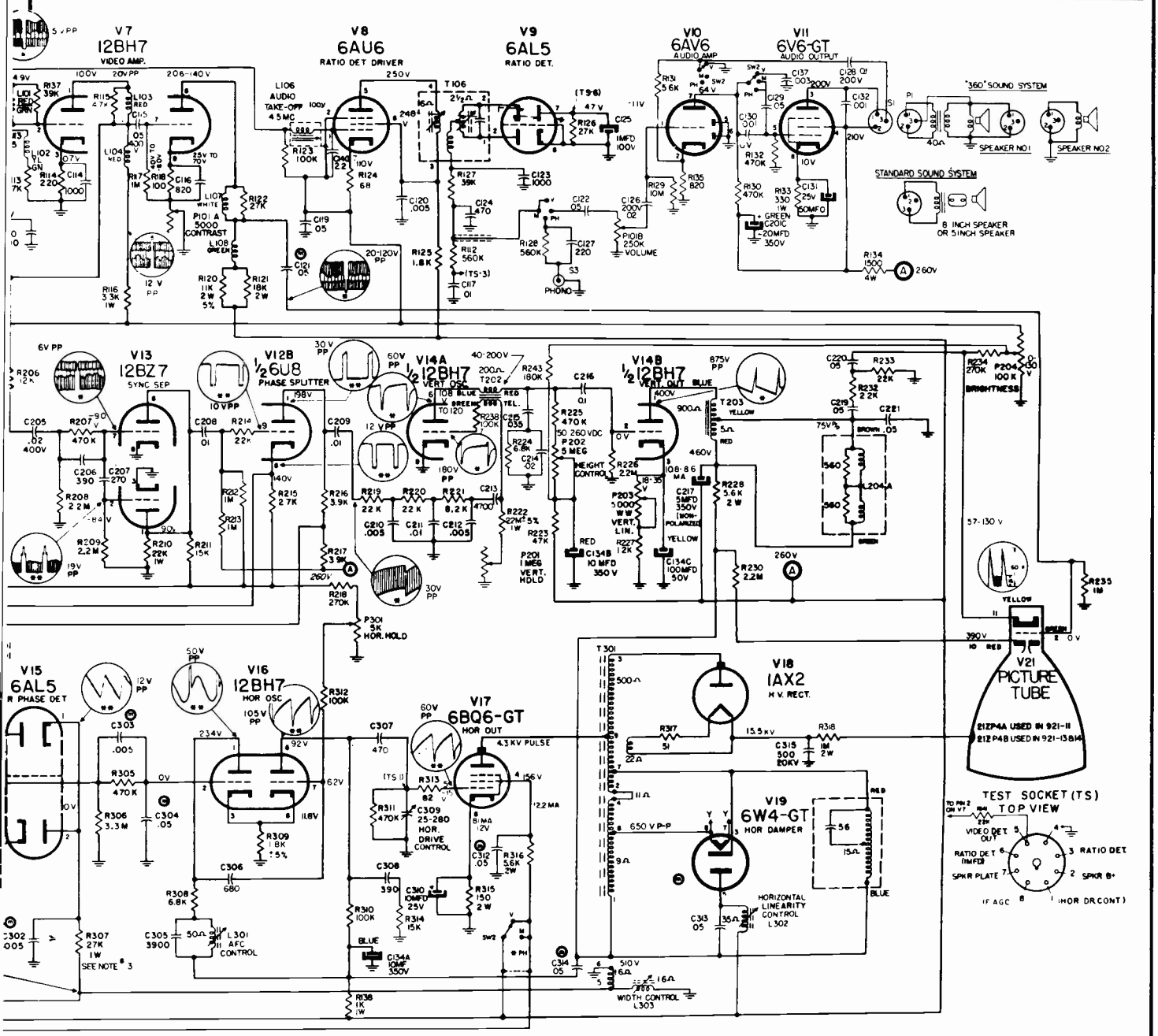

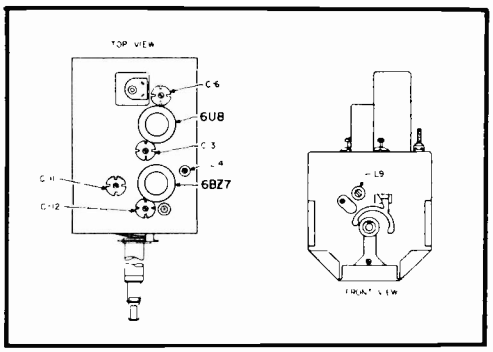

921-14 TUNER

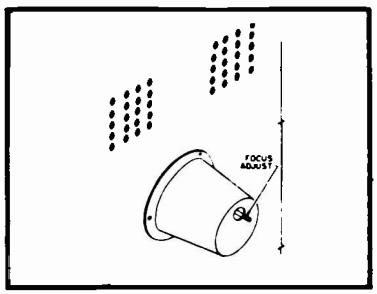

FOCUS ADJUSTMENT

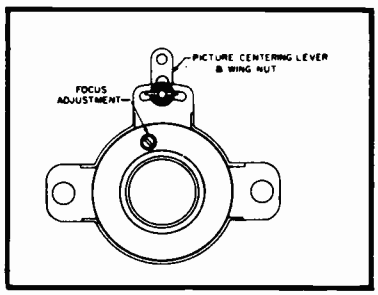

PM FOCUS & CENTERING UNIT

(Alignment information on the next page, over.)

Alignment Information for CBS-Columbia Chassis 921-11, etc. (Continued)

IF ALIGNMENT

1—Connect negative of 3V battery to AGC bus (R102, C104, R106 junction near V3 is readily accessible) or to test socket pin 8, positive to chassis.

2—Remove mixer tube shield, connect Signal Generator, to it and replace over mixer tube so shield does not contact chassis.

3—Connect VTVM lead through a 22K resistor to grid of first video amplifier (Pin 2, V7, 12BH7) or to test socket pin 5 and negative lead to chassis.

4—Turn receiver on and allow it to warm up a few minutes.

5—Set VTVM on —5 volt range and signal generator to 44.2 mc unmodulated.

6—Adjust 4th IF transformer T104 bottom slug for maximum output, setting signal generator attenuator to produce no more than a 3 volt reading on the VTVM.

7—Set signal generator to 39.75 mc unmodulated and adjust T104 trap, top slug, for minimum reading on the VTVM.

8—Set signal generator to 45.6 mc unmodulated and adjust bottom slug of 3rd IF transformer T103, for maximum output as in (6).

9—Set signal generator to 47.25 mc unmodulated and adjust trap T103, top slug for a minimum reading on VTVM.

10—Set signal generator to 42.7 mc unmodulated and adjust bottom slug of T102 for a maximum VTVM reading as in (6).

11—Set signal generator to 41.25 mc unmodulated and adjust trap T102, top slug, for a minimum VTVM reading.

12—Set signal generator to 44.2 mc unmodulated and detune the tuner IF coil L3. Then adjust the 1st IF coil. T101 for a maximum VTVM reading as in (6).

13—Disconnect the signal generator from the tube shield.

14—Connect Sweep Generator to mixer tube shield and an oscilloscope, calibrated for 3 volts peak to peak as reference output level, in place of the VTVM.

15—Loosely couple Marker Generator to input of the Sweep Generator.

16—Adjust Sweep Generator dial and attenuator to show an IF response curve not over 3 volts peak to peak on the calibrated oscilloscope screen. (Exceeding this value will give a distorted response curve.)

17—Adjust tuner IF coil L3 and 1st IF coil T101 to obtain the response curve shown below.

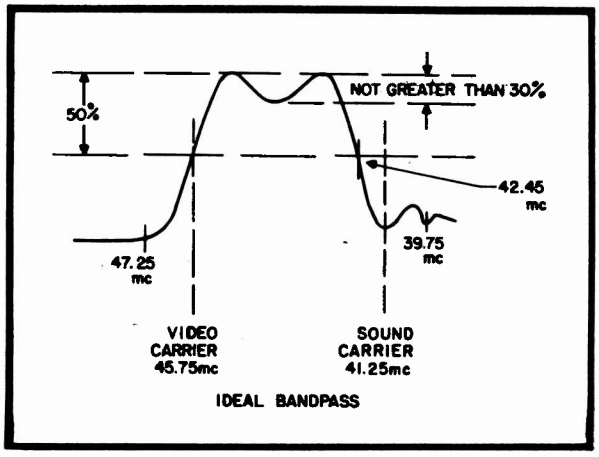

USUALLY: To set 45.75 marker, at 50% point adjust tuner IF coil.

To compensate for tilt adjust 1st IF Coil T101. Adjust for maximum bandwith at the 50% point.

VHF TUNER OSCILLATOR

If all channels are not within range of FINE TUNING control, set FINE TUNING in center of its range and adjust slug reached through front of RF tuner unit for adjustment of each channel. CAUTION: Do not touch adjustment on top of RF tuner unit, other than converter plate coil. L14, during IF alignment.

SOUND ALIGNMENT

1—Connect 4.5 megacycle signal generator to pin 2 of 12BH7 (V7) video amplifier, or to test socket pin 5.

2—Connect DC VTVM (negative polarity) to pin 7 of 6AL5 (V9) ratio detector, or to test socket pin 6. Connect negative lead to chassis.

3—Adjust signal generator to precisely 4.5 megacycles; adjust output to read approximately 5 volts on VTVM.

4—Adjust L106 and bottom of T106 for maximum deflection on VTVM. Keep VTVM reading below 10 volts at all times.

5—Attach two series-connected 100K (±1%) resistors across R126 (Ratio Detector Load Resistor). Connect DC VTVM to center-tap of 100K resistors, and connect ground wire of VTVM to junction of C122 and C124 (Audio Take-Off of T106), or to test socket pin 3.

6—Adjust top of T106 for zero reading on VTVM between a plus and a minus peak.

HORIZONTAL OSCILLATOR ALIGNMENT

If the Horizontal Hold control fails to maintain sync, the horizontal oscillator should be reset. To reset this screwdriver adjustment, set the Horizontal Hold control in the center of its range and sync the picture with the horizontal AFC adjustment screw. Check the hold control action on various channels and alter the screw adjustment as required to provide sync on all channels.

CROSLEY

CHASSIS 426 (without UHF Converter)	CHASSIS 426 (with UHF Converter)
Models: G-17TOMH	Models: G-17TOMU
G-17TOBH	G-17TOBU
G-17TOWH	G-17TOWU
G-17TOBKH	
G-17TOWEH	

Chassis 431, used in Models G-21TOBH, G-21TOMH, G-21TOWH, and Chassis 431-2, used in Models H-21COBH, H-21COBU, H-21COMH, H-21COMU, H-21COSBH, H-21COSH, H-21COWH, H-21COWU, H-21HCBH, H-21HCBU, H-21HCMU, H-21HCWH, employ 21ATP4 picture tubes, while Chassis 432, used in Models H-17TOBH, H-17TOBU, H-17TOMH, H-17TOWH, H-17TOMU, H-17TOWU, employs a 17AVP4 picture tube. All these sets are similar to Chassis 426. Chassis 443, used in Models H-21HPBHa and H-21HPWHa, Chassis 443-3, used in Models H-21HPBHd and H-21HPWHd, and Chassis 445 are also similar. Aside from minor differences (such as the use of 25CU6 hor. output tube, added 3AV6 stage on some sets, and the use of other tuners) these chassis are so similar that the same material will apply to all these sets.

R.F. AND MIXER ALIGNMENT

Step No.	Station Selector	Oscilloscope	Bias	Signal Generator To	Adjust
1.	Chan. #10	High side through a 10,000 ohm resistor to TP1 on Tuner. Ground lead to Tuner Case.	-1.5 volts to white lead on tuner.	Signal Generator set to 195.5 MC., 400 cycle 30% AM modulated. Through Dummy Antenna to the Antenna lead-in.	C-3 for maximum 400 cycle response on scope. Remove signal Generator.
2.	"	"	"	Sweep Generator to Antenna lead-in through dummy antenna. Set Generator to sweep Channel 10 freq. Loosely couple Marker Generator to sweep output cable. Set marker to either 21.9 or 26.4 mc.	Adjust C5 & C9, to produce a response curve similar to R.F. and Mixer Response Curve.

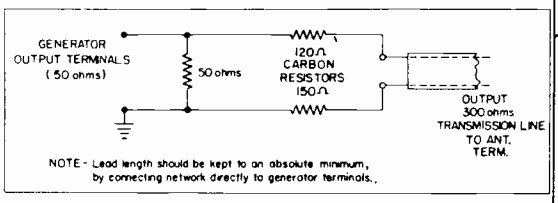

DUMMY ANTENNA

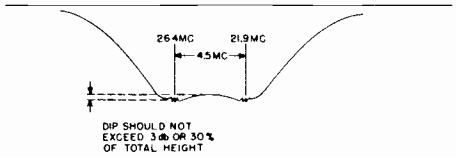

R. F. & MIXER RESPONSE CURVE

Without disturbing the R.F. grid, R.F. plate, and mixer-grid trimmer, check the response on the other VHF TV channels by setting the station selector to the desired channel and changing the frequency of the sweep generator to correspond to the channel being checked. The response curve should be essentially the same on all channels and the markers should fall in similar positions on the response curve. A slight amount of tilt can be tolerated. The amount of tilt indicated by the relative amplitudes of the response curves where the picture and sound I.F. Markers rest should not exceed 30% of the over-all response curve amplitude.

(Service material continued on the next 7 pages.)

CROSLEY Chassis 426 (Continued)

I.F. ALIGNMENT

All lead connections from the signal marker generator and sweep generator must be shielded. Keep exposed ends and ground leads as short as possible (about one inch). Always locate the ground lead connections as close as possible to their respective "hot" leads in the television receiver chassis. The sweep generator output, signal generator output, and contrast control must be kept low enough to prevent overloading the television receiver circuits.

CAUTION: One side of the chassis is connected to the power line. Therefore, test equipment should not be connected to the receiver unless an isolation transformer is used between the power line and the receiver. DO NOT GROUND THE RECEIVER CHASSIS UNLESS AN ISOLATION TRANSFORMER IS USED.

The front side of the chassis as referred to below means the side opposite the tubes.
The rear side of the chassis means the side on which the tubes are mounted.

VIDEO I. F. ALIGNMENT (with VTVM)

In the I.F. Alignment, limit input of signal generator so that reading on VTVM does not exceed -2 volts.

Step No.	Connect Signal Generator Through a .01 Capacitor	Signal Gen. Freq. MC.	Connect VTVM	Miscellaneous Connections and Instructions	Adjust
1.	Test Point No. 2 on Tuner (closest to L9 slug adjustment).	24.4 mc.	Junction of R118 and C113 and chassis.	Connect 3 volt bias battery negative lead to white lead from tuner, positive lead to chassis	T101 for maximum indication on meter, limit input to make peak less than -2 volts D.C. on VTVM.
2.	"	22.9 mc.	"	"	L103 (rear slug) for maximum. Use first peak from tinnerman clip end of coil.
3.	"	21.9 mc.	"	"	L103 (front slug) for minimum. Input level should be high enough to produce at least .5 volts at null on VTVM. Use first null obtained from end of coil form opposite tinnerman clip.
4.	Repeat steps 2 and 3.				
5.	"	25.5 mc.	"	"	L102 for maximum.
6.	"	25.1 mc.	"	"	L101 (front slug) for maximum. Use first peak from tinnerman clip end of coil.
7.	"	27.9 mc.	"	"	See Note 1. L101 (rear slug) for minimum deflection on VTVM. Use first null obtained from end of coil form opposite tinnerman clip.
8.	Repeat step 6 (and 7, if adjacent channel trap is used).				
9.	Test Point No. 1 on Tuner (closest to C21 trimmer screw).	25.1 mc.	"	Connect a 100 ohm resistor in series with a 1000 mmf. cap. across L101.	L9 (brass screw) on the Tuner for maximum.

Note 1. This adjustment can be made only on receivers where the Adjacent Channel Trap has been added.

TO CHECK I. F. ALIGNMENT (with scope)

Excessive sweep input will overload the circuit and cause distortion in the wave form. Check for possible overload by temporarily increasing and decreasing the signal input level and noting any change in the wave form.

Excessive signal from the marker generator will also distort the wave form. Be sure to keep the marker at the minimum usable amplitude.

Sweep Gen. Connected to	Scope Connected to	Bias	Sweep Gen. Set to	Remarks
Ungrounded shield of V2 and chassis.	High side of contrast control and chassis. Contrast control at minimum contrast.	Connect 3 volt bias battery negative lead to white lead from tuner, positive lead to chassis.	Sweep from 20 to 30 megacycles.	Provide markers as shown on curve. 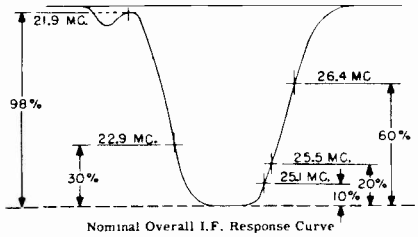 Nominal Overall I.F. Response Curve A slight deviation in response curve is tolerated, but if any great deviation is noted, the I.F. stages will have to be realigned.

CROSLEY Chassis 426 (Continued)

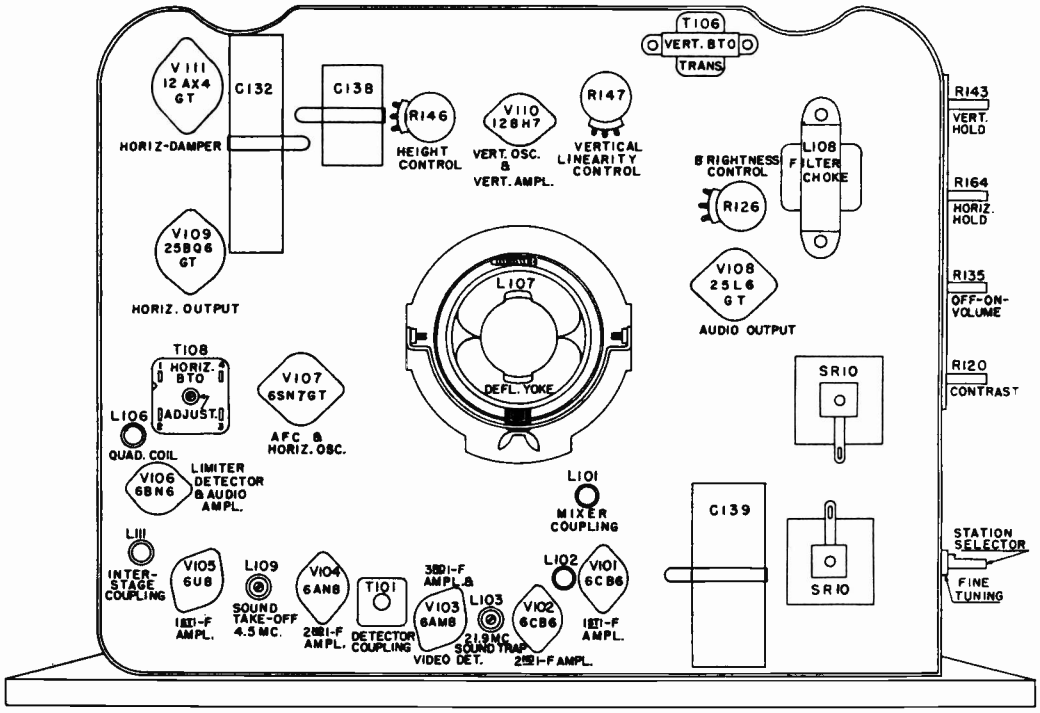

FRONT VIEW OF CHASSIS 426
(Tube & Alignment Locations)

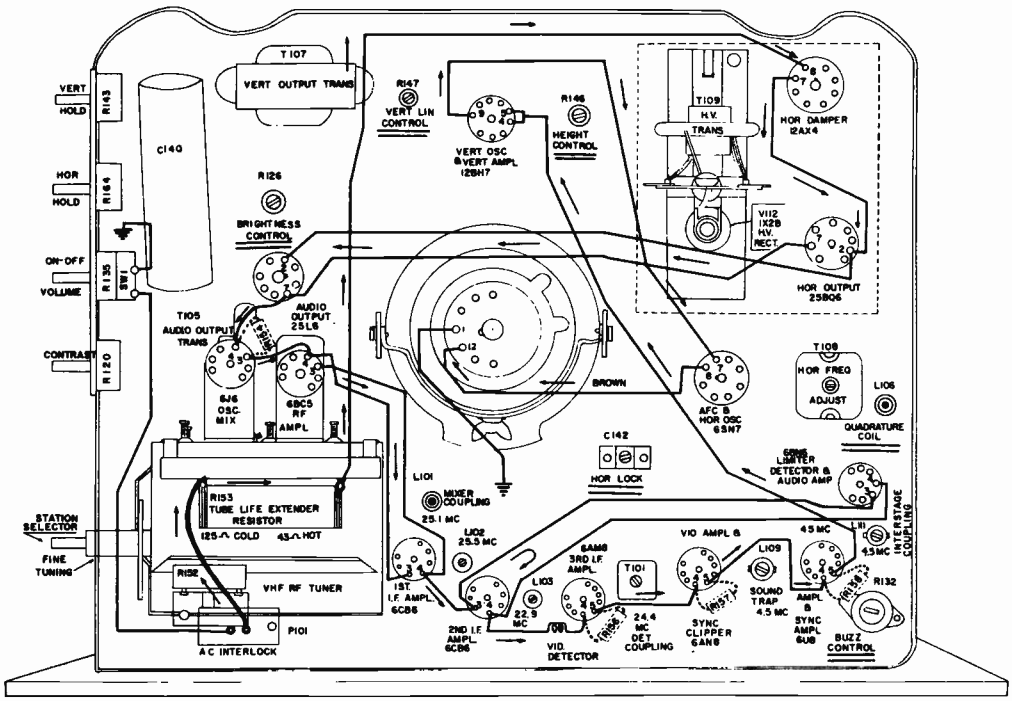

REAR VIEW OF CHASSIS 426
(Tube & Alignment Locations & Tube Filament Wiring)

CROSLEY

VHF OSCILLATOR ALIGNMENT

(Continued)

OSCILLATOR ALIGNMENT (using scope)

Step No.	Oscilloscope	Channel Selector	Sweep Generator	Marker Generator	Adjust
1.	High side of scope to high side of R120 contrast control. Low side to chassis. See Note.	Chan. #2	To sweep Channel 2 frequencies. Connect Gen. output in series with dummy antenna to antenna lead-in.	59.75 . Sound I. F. Carrier.	Channel 2 oscillator slug so that marker falls into bottom of valley on curve (the point corresponding to the 21.9 mc. marker as shown on Nominal Overall I. F. Response Curve sketch.) Be sure that the Fine Tuning Control is set to the center of its range.

2. Repeat the above procedure for each of the remaining channels, by resetting the sweep generator and the marker generator to the correct frequencies for each channel that is to be adjusted.

Note: Apply a -3.0 volts negative bias to Junction of C111 and R117 or to white lead from VHF R. F. Tune Use whichever is the most convenient point.

SOUND ALIGNMENT

The 4.5 mc. trap (front of L109) must be aligned first, regardless of which procedure is used for the remainder of the alignment (Procedure A or B).

Step No.	Channel Set To	Adjust	Remarks
1.	Any unused channel	Connect a crystal controlled 4.5 mc., 400 cycle amplitude modulated signal (30% or greater) between pin 8 of V104 and chassis. Connect high side of scope through a detector probe to cathode of picture tube, low side to chassis. Adjust L109 (rear slug) for minimum 400 cycle indication on scope.	Remove signal generator and scope from the receiver.

PROCEDURE A (with signal from station)

Step No.	Channel Set To	Adjust	Remarks
1.	Strong signal	L106 for maximum sound output.	Set Buzz Control (R132) approximately 90° from clockwise stop.
2.	Weak signal	L111 and L109 (front slug) for maximum sound output.	If the signal in the area is too strong to obtain these peaks, remove the antenna from the receiver.
3.	Weak signal	Buzz Control (R132) for minimum noise (hash).	This signal should be weak enough to allow noise (hash) to come through along with the sound.
4.	Strong signal	L106 again for maximum sound output.	Limit the volume control setting so that this peak can be heard.

PROCEDURE B (with alignment equipment)

Step No.	Connect Signal Gen.	Signal Gen. Freq. MC.	Connect Scope	Miscellaneous Instructions	Adjust
1.	Pin 8 of V104.	4.5 mc. FM modulated 400 c.p.s., 25 kc. deviation.	Across secondary of output trans. T105.	Set Buzz Control (R132) to approximately 90° from clockwise. stop. Set the Volume Control (R135) at a low level.	L106 for maximum 400 cycle indication on scope.
2.	"	"	"	"	L111 for maximum response keeping input signal at a low level (below limiting).
3.	"	"	"	"	L109 (front slug) for maximum response keeping input signal at a low level.
4.	"	4.5 MC. AM modulated 400 c.p.s.	"	Use a high input level on signal generator.	Buzz Control (R132) for null (minimum 400 c.p.s. amplitude on scope).
5.	"	4.5 MC. FM modulated 400 c.p.s.,	" "	Set the Volume Control (R135) at a low level.	Re-peak L106 for maximum 400 cycle indication on scope.

CROSLEY Chassis 426 (Continued)

HORIZONTAL BLOCKING OSCILLATOR ALIGNMENT

Tune Receiver to TV signal, adjust contrast control for normal picture below limiting in the Video Amplifier, and proceed as follows:

Step No.	Contrast Control Set For	Miscellaneous	Adjust
1.	Normal Picture	----------	Horizontal Hold Control (R164) and Horizontal Frequency Adjustment (rear slug of T108) until picture is in sync.
2.	"	Connect scope in series with 10 mmf. to lug 4 of T108.	Adjust Horizontal BTO Trap (front slug of T108) to obtain the waveform shown below. Keep the picture in sync at all times by re-adjusting the Horizontal Hold, Horizontal Frequency and/or Horizontal Lock Trimmer (C142). 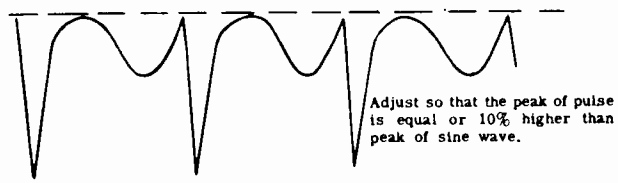
3.	"	Horizontal Hold set fully clock-wise.	Adjust Horizontal Frequency (rear slug of T108) by turning out until the picture is just out of sync. Then turn the control slowly in until the picture is just ready to fall into sync (indicated by a wide black vertical or diagonal horizontal blanking bar).
4.	"	Horizontal Hold set fully counter-clockwise.	Picture should normally be in sync. Remove the signal by tuning off and then re-tuning to the station. If more than seven bars are present, adjust the Horizontal Lock Trimmer slightly counter-clockwise until three or four bars appear when the receiver is tuned off and then re-tuned to the station (Horizontal Hold Control still set fully counter-clockwise). If less than three bars are present, adjust the Horizontal Lock Trimmer counter-clockwise to obtain the three or four bars as described above. Since the Horizontal Lock Trimmer adjustment affects the horizontal frequency, the adjustments of both the Horizontal Frequency Adjustment and the Horizontal Lock Trimmer must be repeated until the conditions outlined in steps 3 and 4 exist simultaneously at the extreme positions of the Horizontal Hold control. Check pull-in range, which should be normally 60° to 120°.
5.	Weak Picture	----------	Set the Horizontal Hold Control so that when the receiver is tuned off and then re-tuned to the station, the picture returns completely in sync.

TABLE OF SOCKET VOLTAGES

The following voltages were measured with an electronic voltmeter while the set was operating on 117 volts, 60 cycle a.c. with no signal input, antenna terminals shorted, Station Selector set to channel 3, and the Brightness and Contrast Controls at minimum setting. Electronic voltmeter connected between socket lug and chassis. * = AC. voltages. Voltages may vary depending upon the setting of other controls.

D. C. current at junction of L108 and C132B, with contrast control in the maximum counter-clockwise position, 190 ma. With contrast set at maximum clockwise position, D. C. current at this point is 200 ma.

SYMBOL	TYPE	PIN 1	PIN 2	PIN 3	PIN 4	PIN 5	PIN 6	PIN 7	PIN 8	PIN 9
V101	6CB6	-0.7	+0.7	*50.4	*44.1	+129	+131	0	---	---
V102	6CB6	-0.9	+1.0	*44.1	*37.8	+131	+133	0	---	---
V103	6AM8	+1.0	---	+132	*37.8	*31.5	+135	0	-1.1	0
V104	6AN8	+7.2	-1.1	0	*31.5	*25.2	+240	+230	+1.7	+5.8
V105	6U8	+72	---	+58	*25.2	*18.9	+58	+0.7	0	-0.5
V106	6BN6	+2.2	---	*44.1	*37.8	+95	---	+104	---	---
V107	6SN7GT	+12	+64 to +120	+5.0	-83	+210	0	*12.6	*6.3	---
V108	25L6GT	---	*81.7	+250	+265	+145	---	*56.7	+150	---
V109	25BQ6	---	*81.7	---	+130	-27	---	*56.7	0	Cap - High Voltage
V110	12BH7	+100	-22	0	*18.9	*18.9	+470	+100	+120	*12.6
V111	12AX4	---	---	+470	---	+260	---	*81.7	*94	---
V112	1X2B	---	---	---	---	---	---	---	H.V. 13KV	---
V113	17HP4	*0	---	---	---	---	+150	(Pin 10) +320	(Pin 11) +150	(Pin 12) *6.3
V1	6BC5	---	0	*44.1	*50.4	+125	+125	0	---	---
V2	6J6	+80	+90	*50.4	*56.7	---	-5	0	---	---

CROSLEY Chassis 426 Circuit Diagram

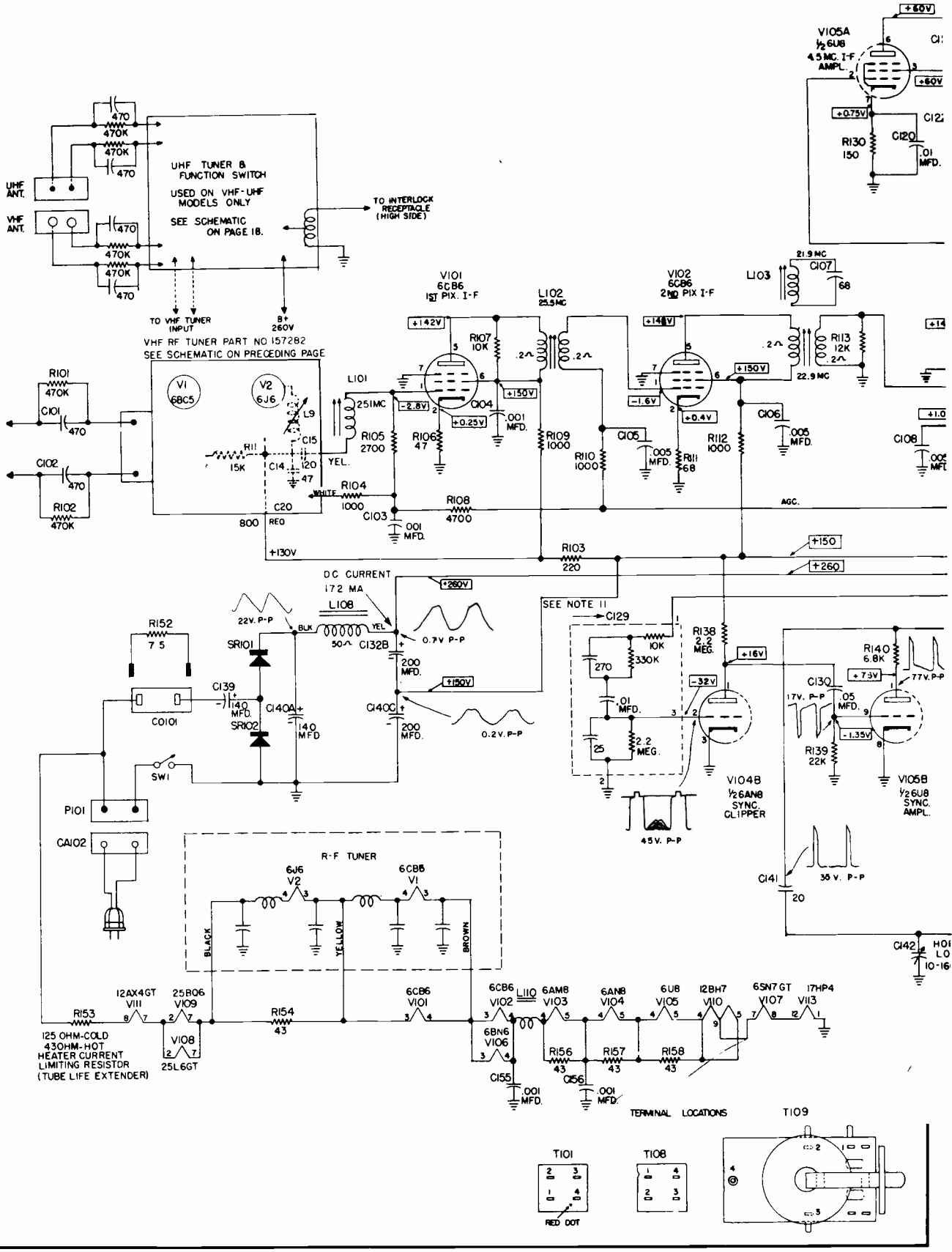

SCHEMATIC WIRING DIAGRAM CHASSIS 426

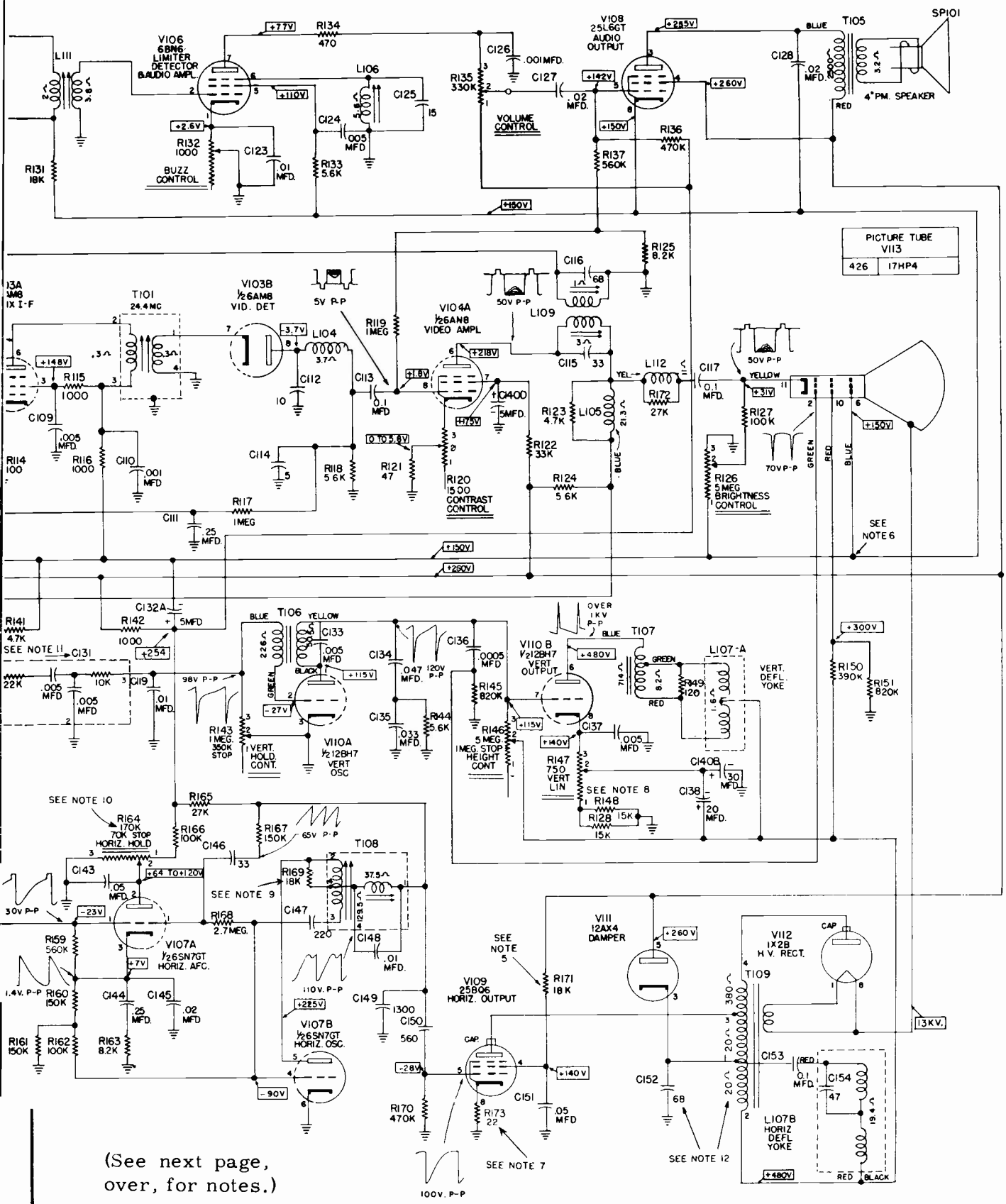

(See next page, over, for notes.)

CROSLEY Chassis 426 (Continued)

NOTES

1. All D.C. voltages measured with an electronic voltmeter connected from socket lug to chassis. Some voltages are variable depending upon signal input. Voltages shown were measured with a signal voltage of 850,000 microvolts and with a normal picture on the picture tube and the contrast and brightness controls set for 50 volts peak to peak on the cathode (pin 11) of the picture tube. Socket voltage tolerance 10%. 1
2. Supply voltage, 117 volts, 60 cycle AC.
3. K = 1000.
4. On all capacitance values in mmf. and all resistance values in ohms unless otherwise noted.
5. R171 is a special 2 watt resistor capable of standing overload for limited periods of time. Replace with part number 156911-3.
6. Better focus may be obtained with replacement picture tubes if the electronic focus anode is connected to a point other than +150 volts. Suggested points to try are: chassis ground, +260 volts, +300 (picture tube, pin 10) and +480 volts.
7. R173 was added on some receivers to minimize horizontal overdrive, noticeable by a vertical white band slightly left of the center of the raster. Because of individual tube characteristics, overdrive may be introduced when the 25BQ6GT tube is replaced in a set that is not provided with R173. In this case it will be necessary to correct the overdrive condition by adding a 22 ohm, 10%, 1/2 watt resistor, part number 39374-5. Disconnect tube socket, pin 8, from ground and insert the resistor between the pin and the chassis.
8. In some sets R128 is a 12,000 ohm, 10%, 2 watt resistor (part No. 39374-214). In such cases R148 is a 18,000 ohm, 10%, 2 watt resistor (part No. 39374-216) or a 22,000 ohm, 10%, 2 watt resistor (part No. 39374-217).
9. In some sets R169 is a 15,000 ohm, 10%, 1/2 watt resistor (part No. 39374-39).
10. In some later production sets, Horizontal Hold control R164 has an overall resistance of 145,000 ohms, with a 70,000 ohm stop. This control will be marked with part No. B-157802-1-2 or B-157802-1-3. It is directly interchangeable with the earlier control marked B-157802-1-1, which has an overall resistance of 170,000 ohms with a 70,000 ohm stop. It will be noticed, however, that the control with the lower overall resistance gives a somewhat wider hold range.
11. On the Vertical Integrating Network C131, leads 2 and 3 are closely spaced, and lead 2 is the middle lead. On the Sync Take-Off Network C129, leads 1 and 2 are closely spaced, and lead 2 is the middle one. When replacing either of these units, the leads must be connected as shown in the schematic in order to obtain satisfactory operation.
12. CODE CHANGE - The schematic and parts list as given are for chassis 426, Code C. This chassis incorporated a change (not found in the Code B chassis) to improve the operation of the horizontal output circuit. In the Code B chassis the Horizontal Deflection Transformer was of an earlier design. C152 was either one 22 mmf., 10%, 3KV, Disc Capacitor (part No. 157811-1), or two 22 mmf. capacitors wired in parallel.

    When it is necessary to install a new transformer (part No. 157820-6) in a Code B chassis, it will be necessary to increase the total capacity of C152 to 68 mmf., ± 10%, at 3 KV. working voltage. This may be done by adding either one or two 22 mmf., capacitors in parallel to the existing capacitors, or by replacing them with a 68 mmf., 10%, 3KV. capacitor (part No. 158215-3).
13. Vertical jitter may be caused by an intermittent contact between ground spring and picture tube, particularly on early production sets that used the brass spring. The trouble may be corrected by replacing the spring with the new type wire spring, part number 158197. An alternate method is to use a small (1") square of copper screening between the brass spring and the picture tube, taping the screen to the tube with a plastic tape such as "Scotch" tape.

PRODUCTION CHANGES

The following changes have been incorporated in later production Chassis 426:

1. R156, R157, and R158, filament shunt resistors (43 ohm, 10%, 2 watt), are replaced by R174, 126 ohm, 10%, 10 watt resistor, Part No. 158230. The change in the schematic is given in Figure 1. Chassis 426 incorporating this change are stamped with code letter F or later.

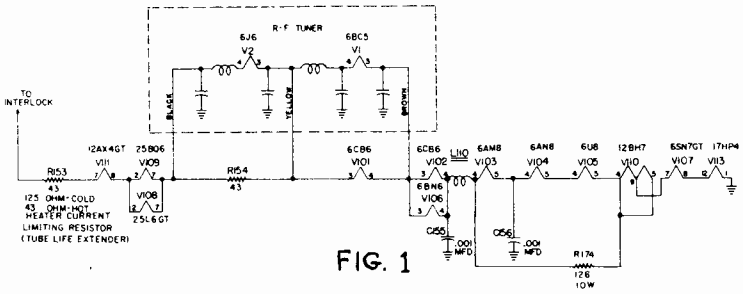

FIG. 1

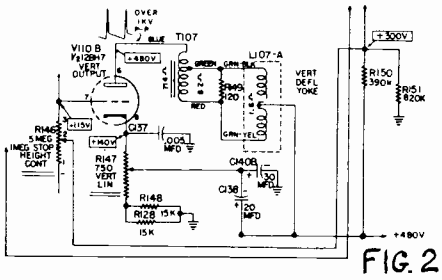

FIG. 2

2. On Chassis 426 (Code Letter D or later) R132 is a 500 ohm control, Part No. 157955-2. Chassis with earlier code letters have a 1000 ohm control, Part No. 157955-1. The change simplifies the sound alignment. When adjusting the Buzz Control for a null, the low value resistance makes it easier to find the null.
3. On Chassis 426 (Code Letter D or later) a wiring change was made in the vertical circuit to avoid excessive height by reducing the plate voltage on V110A (vertical oscillator tube). However, no parts were added or deleted. The change on the schematic is shown in Figure 2.

   If it is desired to make this change on earlier chassis, remove the red lead wire between the positive terminal of the electrolytic capacitor C138 and lug 2 of the Height Control R146. Then connect a length of hookup wire from positive terminal of C138 to the junction of R150 and R151 (on the terminal board directly above the Height Control).

   NOTE: On some chassis which did not incorporate the above change, a 1 megohm, 10%, 1/2 watt resistor (Part No. 39374-61) has been inserted between lug 3 of the Height Control R146 and the grid (pin 7) of the V110B. Since this is not used on all chassis, no code letter was assigned. The 1 megohm resistor compensates for the low overall resistance value of the control when that resistance approaches 4 megohms (lower limit at 20% tolerance). When installing a replacement control which has a similar low overall resistance, either of the above methods may be used to decrease the height of the picture.

DUMONT

RA-312, 313 CHASSIS

(Courtesy of Allen B. DuMont Laboratories)

The RA-312 is designed to receive only the VHF channels and the RA-313 is designed to receive all 82 UHF and VHF channels. The circuitry of both chassis is of similar design, and some models include a Tone control, plus provisions for the attachment of a phonograph with a conveniently located Phono-TV switch.

A 41 mc video i-f strip is employed. The video i-f carrier frequency is 45.75 mc and the sound is at 41.25 mc. The video i-f system consists of 3 stagger-tuned bifilar-wound transformer stages utilizing high-gain 6CB6s. Broadband coupling is used between the mixer output and the first video i-f stage.

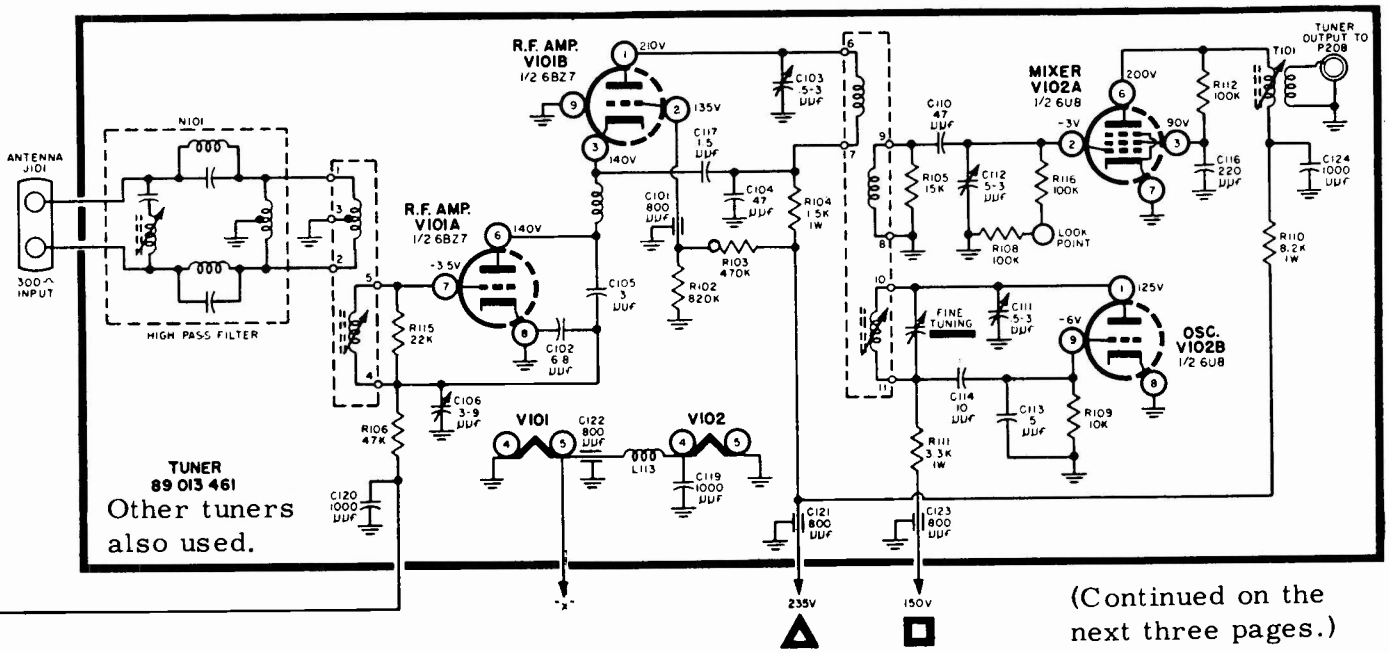

(Continued on the next three pages.)

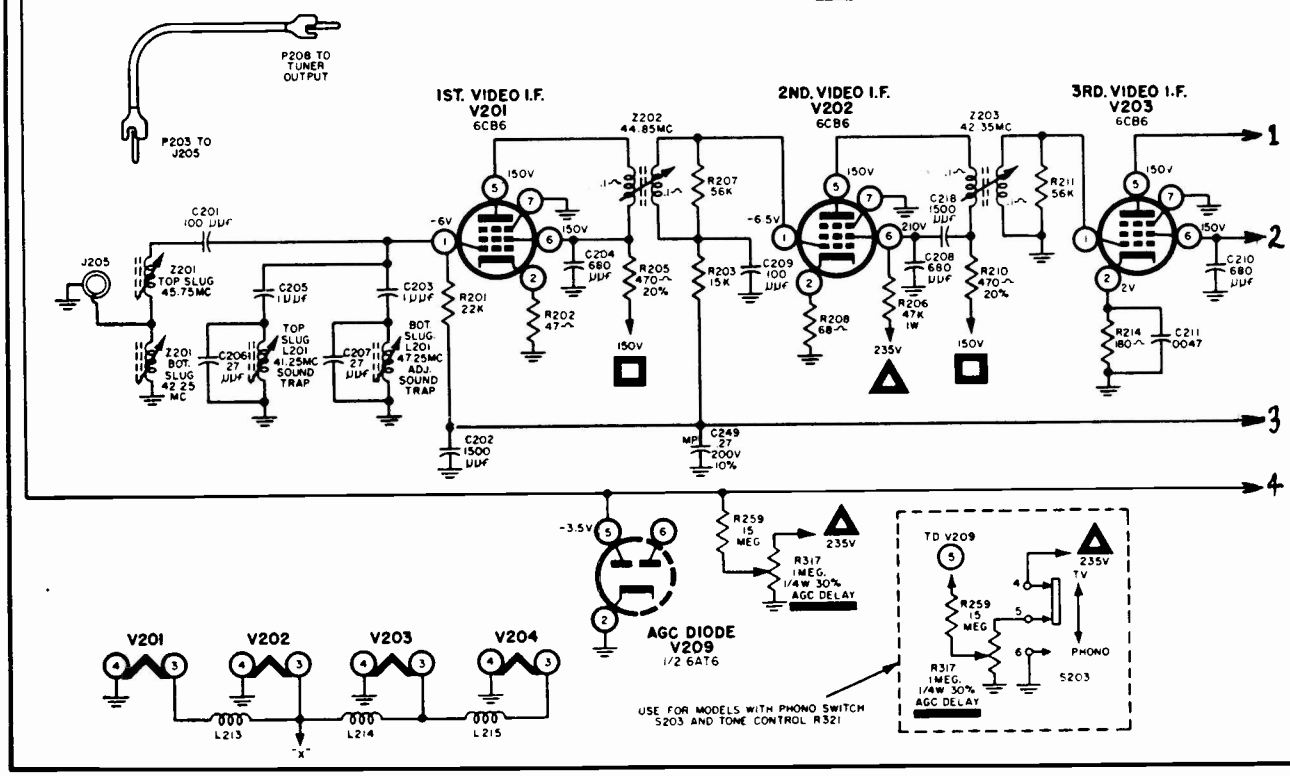

These points 1, 2, 3, & 4, connect to correspondingly numbered points of main circuit on the next page.

NOTES

1. All waveforms and voltages were taken under operating conditions. The receiver was tuned to an average strength TV signal, the Contrast control rotated fully clockwise and the Noise control was rotated fully counter-clockwise.
2. The Noise control and Local-Distance switch consists of a potentiometer, R319, and a snap switch, S202. When R319 is rotated fully counter-clockwise S202 opens (Local position as shown in the schematic).
3. Voltages ± 20% of those shown are normal.
4. All resistors are 10%, one-half watt, unless otherwise indicated. W. W. indicates wire wound resistor.
5. All capacitors are 20%, 500V, unless otherwise indicated. All capacitors are ceramic, unless indicated as follows: M-mica, P-paper, ± -electrolytic, MP-Molded Paper.
6. Tuner 89 013 461 is used in RA-312 chassis with Phono switch and Tone control. Tuner 89 013 561 is used in RA-312 chassis without Phono switch and Tone control. Tuner 89 012 912 and filter N202 are used with UHF tuner 89 013 293 in RA-313 chassis.
7. In some of the earlier chassis the circuit is as follows: Pin 6 of the 6CB6 2nd video i-f is connected to the junction of R210 and Z203. C218, R206 are not used. R222 is a 4.7K 10% 2W resistor connecting to the + 235 volt line. R262 is a 120K 10% 1/2W resistor, R258 is a 220K 10% 1/2W resistor and R266 is a 1.8 Meg. 10% 1/2W resistor. A 180K 10% 1/2W resistor is connected between the junction of R261, R262 and the junction of R260 and R266. R300 is connected to pin 3 of the 12BH7 Vertical Deflection Amplifier.

Du Mont Laboratories
Chassis RA-312, RA-313

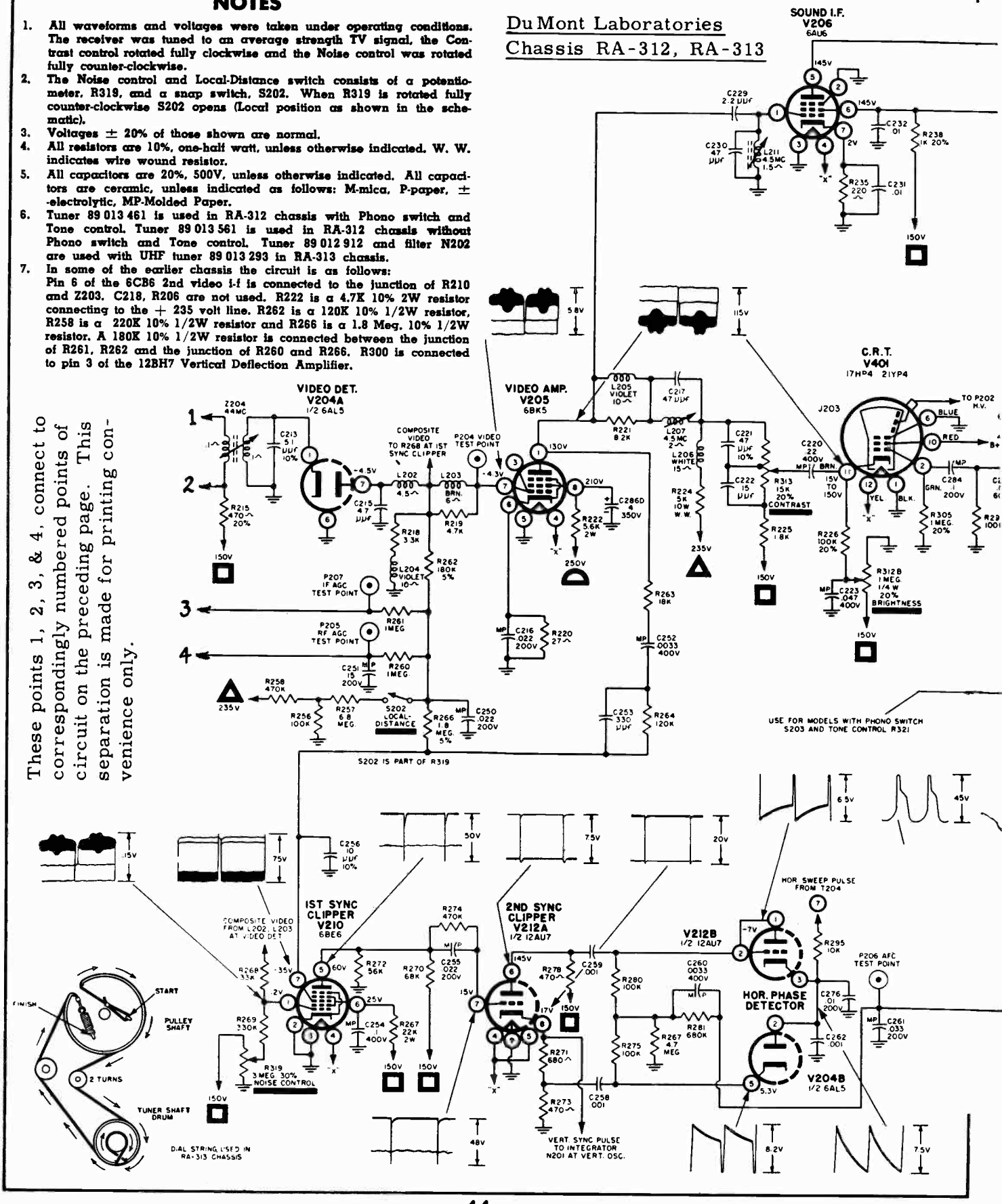

These points 1, 2, 3, & 4, connect to correspondingly numbered points of circuit on the preceding page. This separation is made for printing convenience only.

MOST-OFTEN-NEEDED 1955 TELEVISION SERVICING INFORMATION

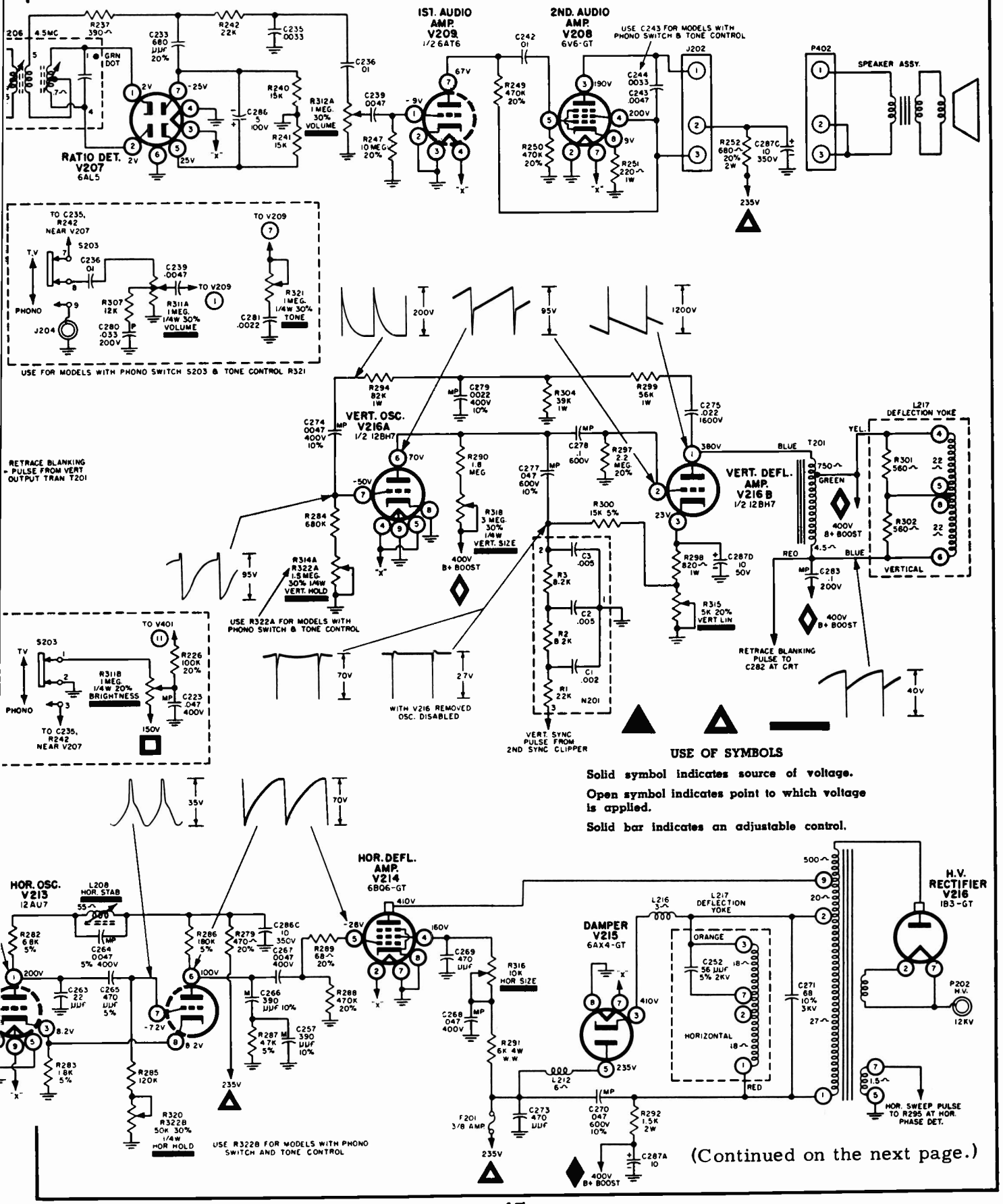

(Continued on the next page.)

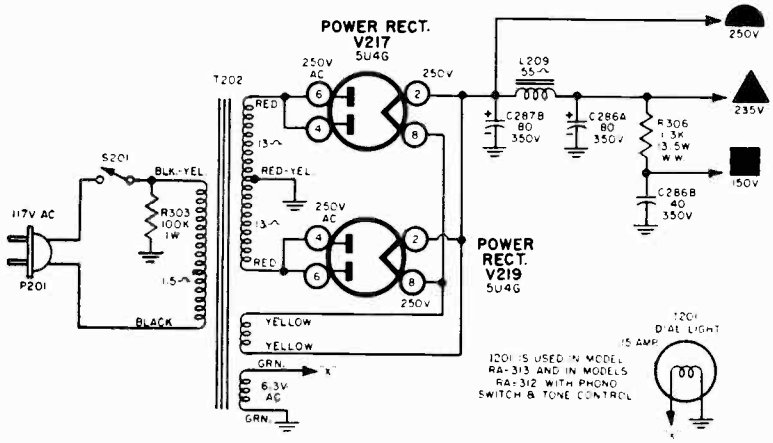

DUMONT

(Continued)

RA-312, 313

This is a part of the main circuit shown on previous pages.

UNDERCHASSIS VOLTAGE POINTS

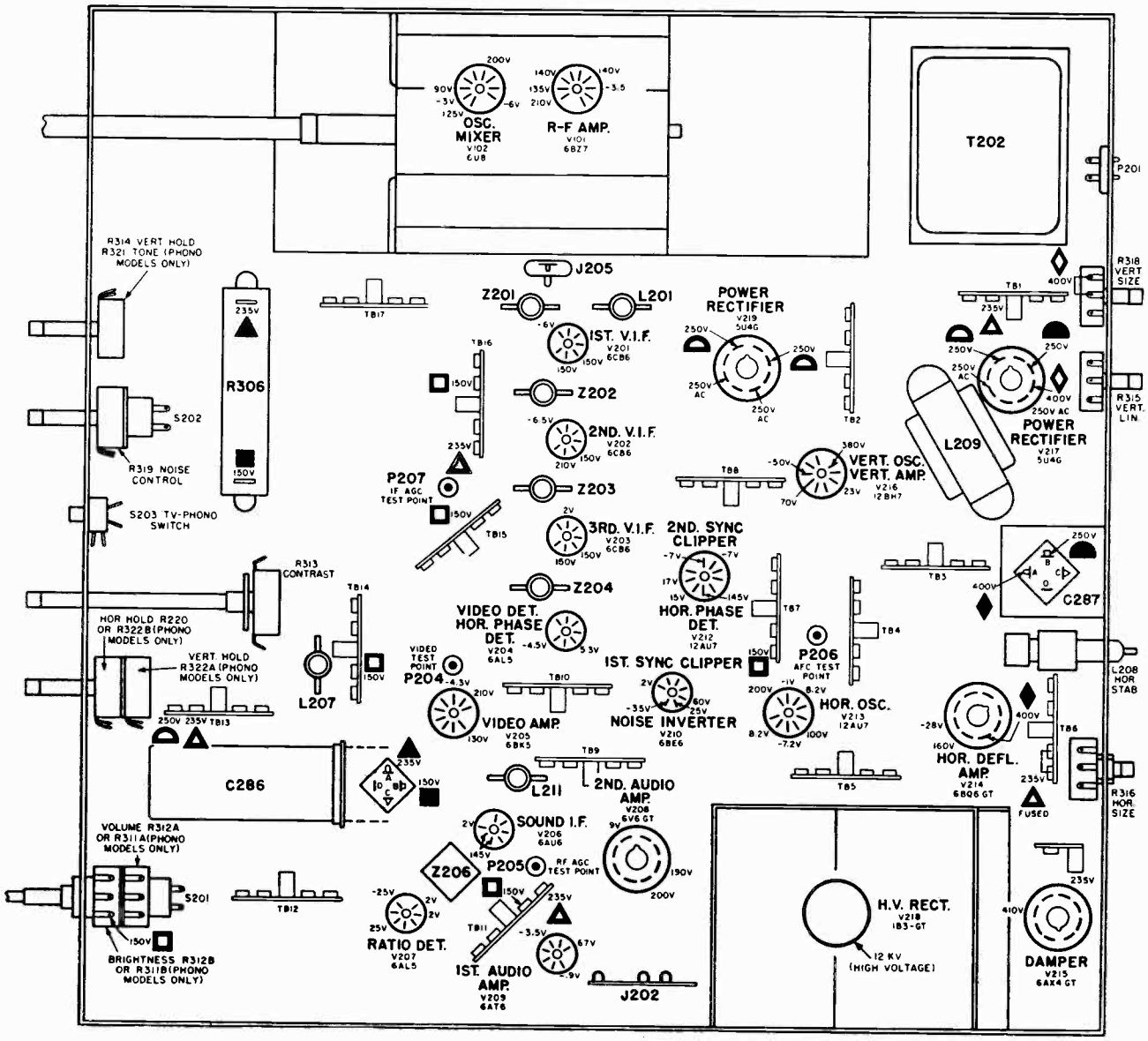

Emerson Television

MODELS – 748B, 787A
CHASIS – 120179-B

MODELS – 748C, 787B, 796C
CHASSIS – 120203-B

MODELS – 777B, 797B
CHASSIS – 120204-B

MODELS – 797C, 798B
CHASSIS – 120205B

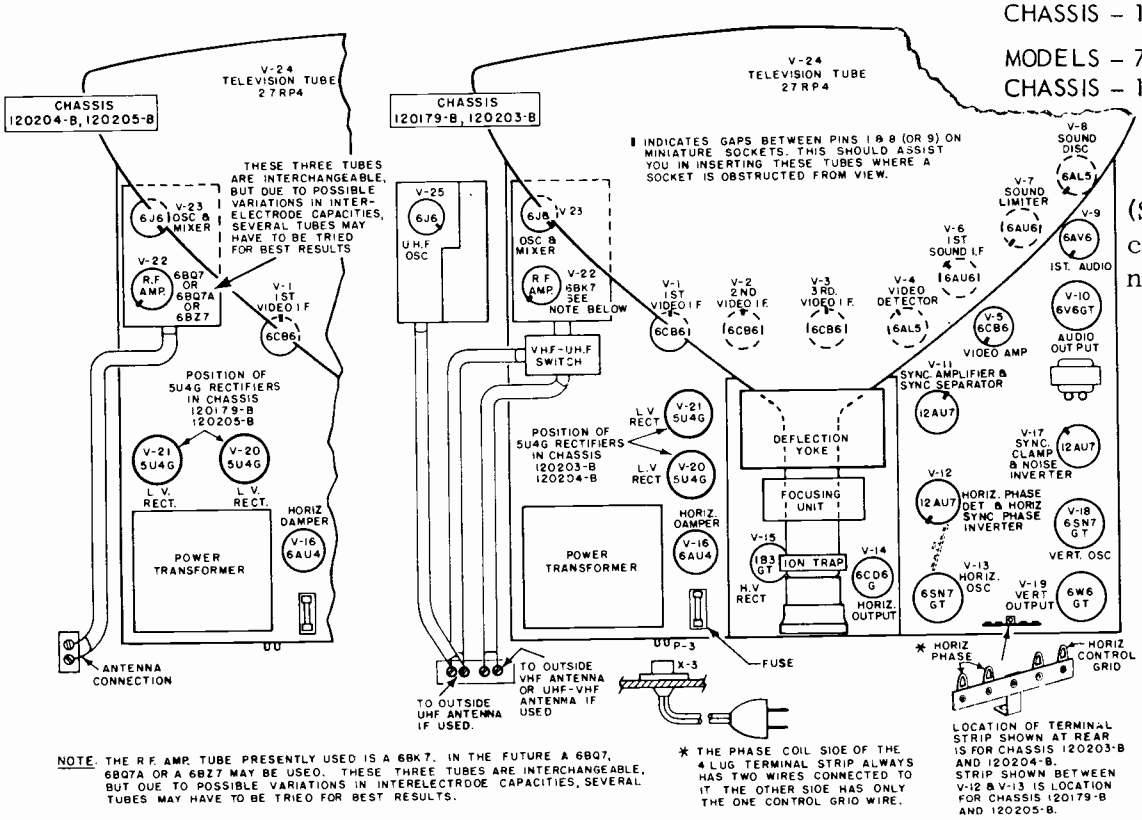

NOTE: THE R.F. AMP. TUBE PRESENTLY USED IS A 6BK7. IN THE FUTURE A 6BQ7, 6BQ7A OR A 6BZ7 MAY BE USED. THESE THREE TUBES ARE INTERCHANGEABLE, BUT DUE TO POSSIBLE VARIATIONS IN INTERELECTRODE CAPACITIES, SEVERAL TUBES MAY HAVE TO BE TRIED FOR BEST RESULTS.

* THE PHASE COIL SIDE OF THE 4 LUG TERMINAL STRIP ALWAYS HAS TWO WIRES CONNECTED TO IT. THE OTHER SIDE HAS ONLY THE ONE CONTROL GRID WIRE.

(Service material continued on the next nine pages.)

TUBE TROUBLE ANALYSIS CHART FOR CHASSIS 120179-B 120203-B, 120204-B, 120205-B

SYMPTOM	CHECK
Weak or no sound nor video (picture), raster normal - UHF only	V-25, D-1, D-2 *
Weak or no sound nor video (picture), raster normal - UHF and or VHF	V-22, V-23, V-1, V-2, V-3, V-4 *
Weak or no sound - Video and raster normal - - - - - UHF and or VHF	V-6, V-7, V-8, V-9, V-10
Weak or no video - Sound and raster normal - - - - - UHF and or VHF	V-5, V-24
Poor or no horizontal nor vertical sync - sound and video normal (contrast control makes video darker or lighter) - UHF and or VHF	V-11, V-17
Poor or no horizontal nor vertical sync - Video weak or distorted, raster normal - sound may or may not be normal - UHF and or VHF	V-22, V-23, V-1, V-2, V-3, V-4
Poor or no horizontal sync - raster normal and sound normal (picture locks in vertically) - - - - - - - - - UHF and or VHF	V-11, V-12, V-13, V-17
Poor or no vertical sync - raster normal and sound normal (picture locks in horizontally) - - - - - - - - UHF and or VHF	V-11, V-17, V-18
Horizontal line (no vertical sweep) - sound normal - UHF and or VHF	V-18, V-19
Insufficient horizontal size, sound & video normal - UHF and or VHF	V-14, V-16, V-20, V-21 V-26**
Insufficient vertical size, or white horizontal bar in picture, horizontal size OK - - - - - - - - - - UHF and or VHF	V-19
No sound, no raster - tubes lit - - - - - - - - - - - - UHF and or VHF	Fuse, V-20, V-21
No sound, no raster - tubes not lit - - - - - - - - - - UHF and or VHF	Plug connection in wall socket, ON-OFF switch, line cord.

By raster we mean the illuminated scanning lines.

* Another very common fault is a shorted or open circuit antenna connection to set.

** Some 120179-B chassis used two 6AX4GT tubes (V-16, V-26) instead of one 6AU4G (V-16).

NEEDED 1955 TELEVISION SERVICING INFORMATION

EMERSON Television
Chassis 120179-B, 120203-B, 120204-B, and 120205-B.

Before taking measurements see page 50 for conditions under which they were taken.

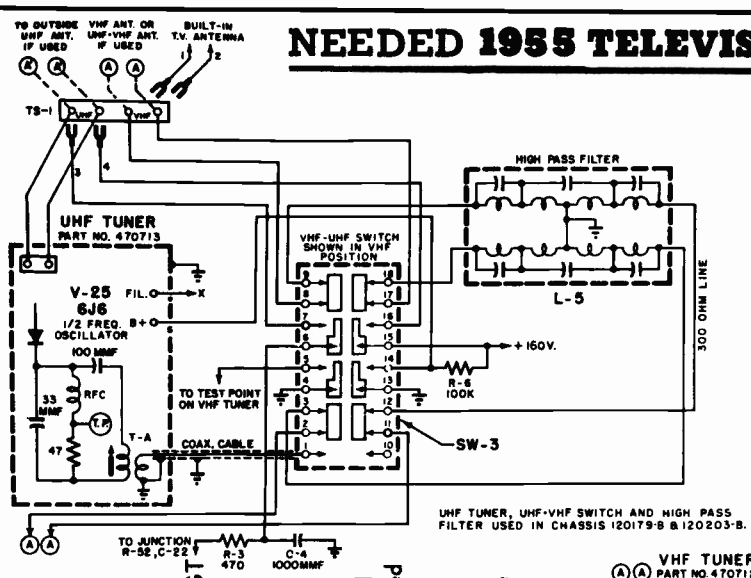

UHF TUNER, UHF-VHF SWITCH AND HIGH PASS FILTER USED IN CHASSIS 120179-B & 120203-B.

NOTES:

1- DISCONNECT BUILT-IN ANTENNA IF AN EXTERNAL ANTENNA IS USED, (SPADE LUGS 1 AND 2).

2- IF ONLY ONE ANTENNA LEAD-IN IS USED FOR BOTH UHF AND VHF RECEPTION CONNECT THE LEADS MARKED 3 AND 4 TO THE TERMINALS A'-A' (UHF) AND THE ANT LEAD-IN TO THE TERMINALS A-A (VHF) ON ANT. STRIP TS-1.

3- IF SEPARATE UHF AND VHF ANT. LEAD-IN'S ARE USED DISCONNECT LEADS MARKED 3 AND 4 AND CONNECT THE LEAD-IN'S TO THEIR RESPECTIVE TERMINALS A'-A' (UHF) AND A-A (VHF) ON ANT. STRIP TS-1.

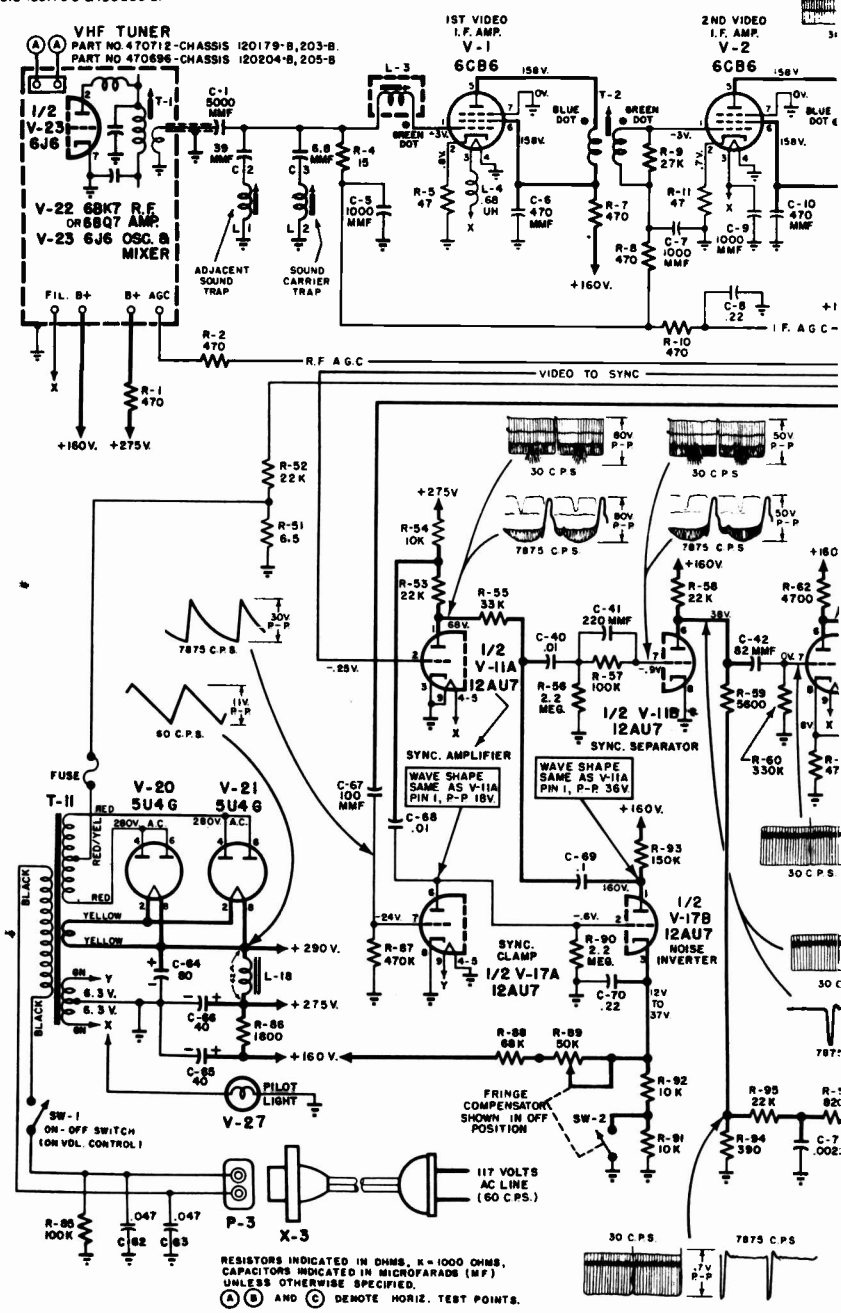

PRODUCTION CHANGES

1. The wattage of resistors R-108 (470 ohms) and R-110 (33,000 ohm) have increased from 1/2 watt to 1 watt to prevent these resistors from overloading at extreme settings of the vertical size and linearity controls. Chassis incorporating this change are coded as follows.
   120179-B (A) 120203-B, 120204-B, 120205-B – Initial Production
2. For standardization purposes the two 6AX4GT damper tubes (V-16, V-26) have been replaced with a single 6AU4GT damper tube (V-16). Chassis incorporating this change are coded as follows.
   120179-B (B) 120203-B, 120204-B, 120205-B – Initial Production
3. Due to component variations it was found necessary to change R-74 from 330K to 390K 1/2 watt in order to eliminate an overdrive bar that has developed (white vertical line in raster).
   At the same time a 100mmf 4kv. condenser (pt. No. 928114) was added between terminals 4 and 8 of the horizontal output transformer to increase width for low line voltage operation. Chassis incorporating these changes are coded as follows.
   120179-B (C) 120203-B, 120204-B – Initial Production 120205-B (B)

NOTE: Triangle (A) on the 120205-B chassis signifies the use of a 27RP4 picture tube instead of a 27EP4. Since the 27RP4 has an acquadag coating it forms it's own Hi-voltage filter condenser and as a result C-61 (500 mmf, 30kv.) and R-84 (100K, 1 watt) are omitted. The 27RP4 is used on the 120203-B and 120204-B chassis.

MOST-OFTEN-NEEDED 1955 TELEVISION SERVICING INFORMATION

EMERSON

SCHEMATIC DIAGRAM
CHASSIS
120179-B (B)
120203-B
120204-B
120205-B (A)

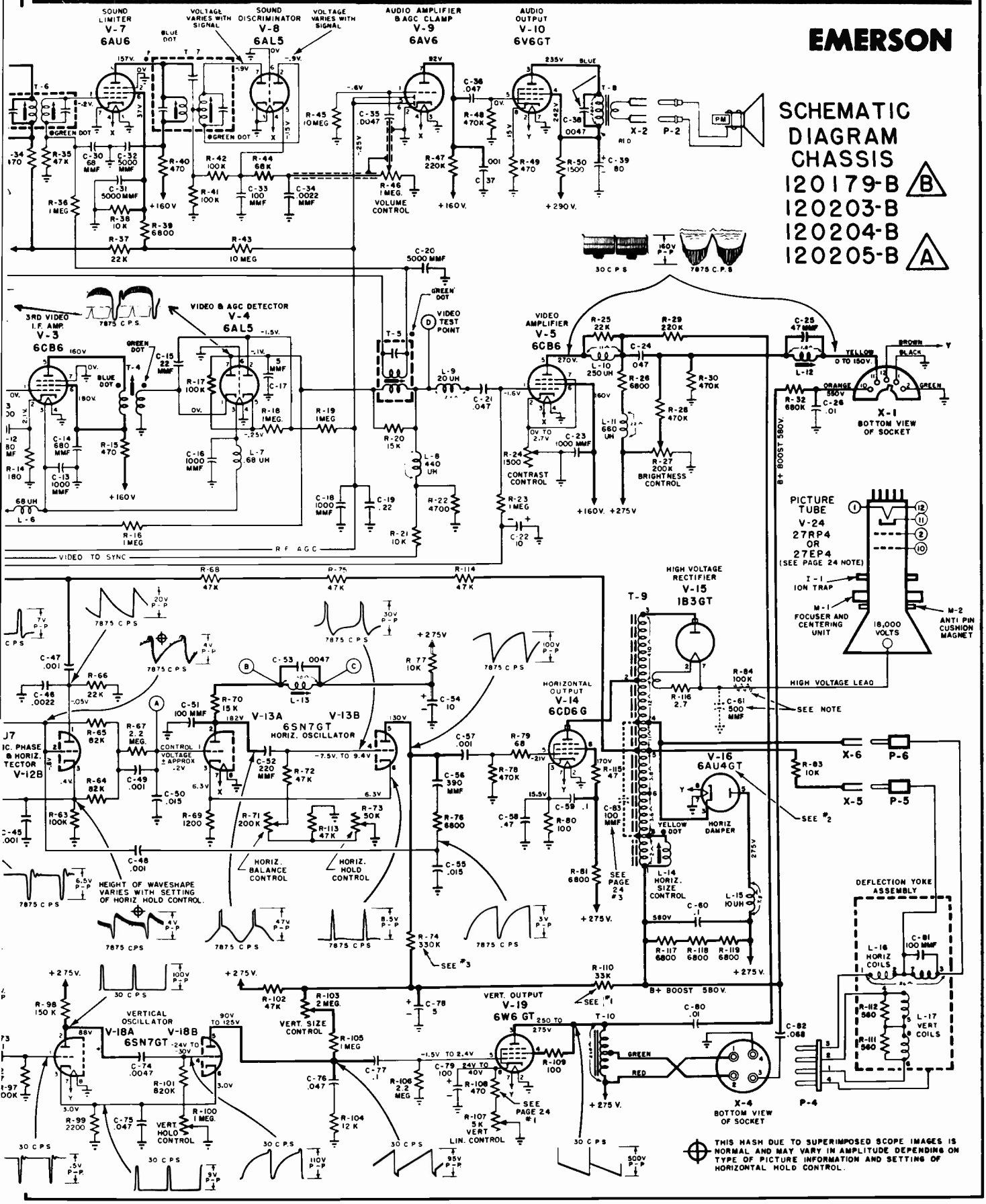

EMERSON Television Chassis 120179-B, 120203-B, 120204-B, 120205-B, continued

Models 748B, 784C, 787A, 787B and 786C incorporating chassis 120179-B and 120203-B are "ALL CHANNEL UHF - VHF RECEIVERS." Combination VHF and UHF tuning is achieved through the use of two tuners which are connected to the same tuning knobs making VHF or UHF channel tuning very simple. The VHF cascode turret tuner has 13 positions (one more than the conventional type), 12 being used for VHF reception, (channels 2 to 13), while the 13th or UHF position is used to activate the proper UHF circuits and provides additional amplification for the converted 40 mc UHF signals.

Models 777B, 797B, 797C and 798B incorporating chassis 120204-B and 120205-B are VHF receivers which can, if desired, be easily adapted to UHF by means of interchangeable channel strips or by use of an external converter.

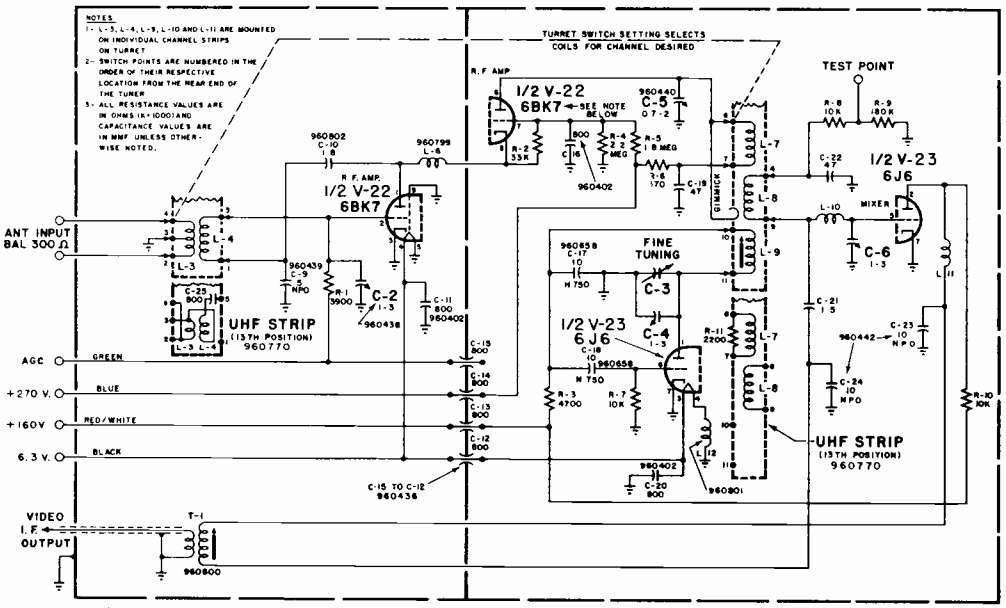

NOTE: THE R.F. TUBE PRESENTLY USED IS A 6BK7. IN THE FUTURE A 6BQ7, 6BQ7A OR A 6BZ7 MAY BE USED. THESE THREE TUBES ARE INTERCHANGEABLE, BUT DUE TO POSSIBLE VARIATIONS IN INTERELECTRODE CAPACITIES, SEVERAL TUBES MAY HAVE TO BE TRIED FOR BEST RESULTS

SCHEMATIC DIAGRAM OF VHF TUNER 470712 USED ON UHF-VHF CHASSIS 120179-B, 120203-B

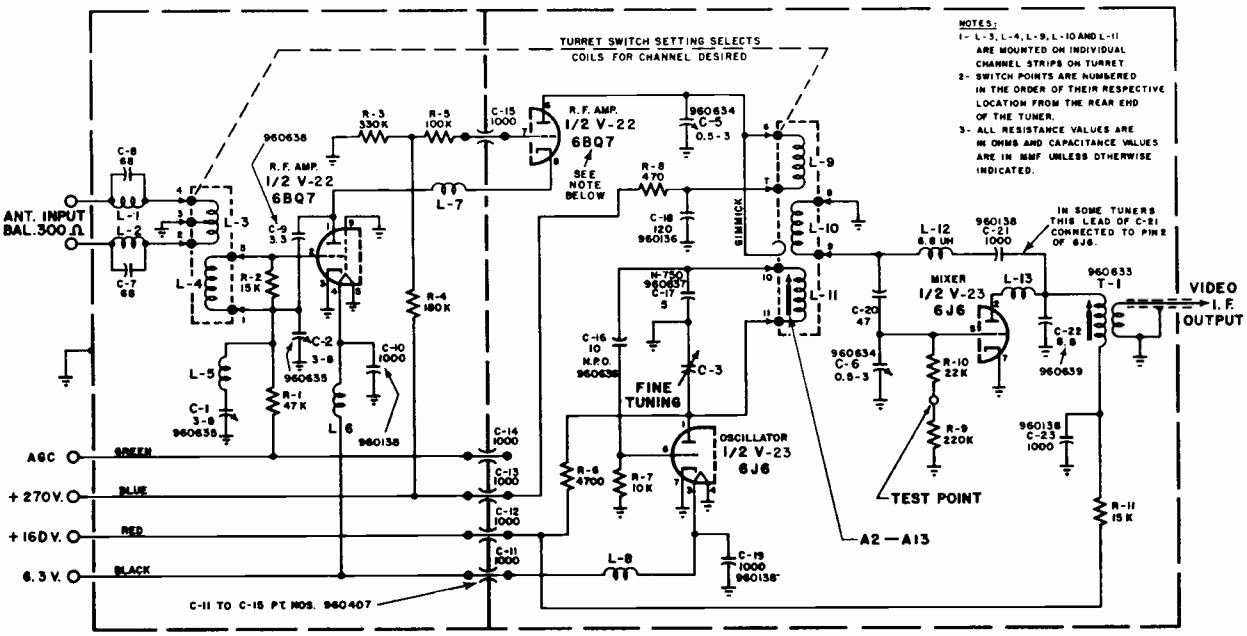

TUNER PART NO. 470696 — MECHANICAL PARTS CAN BE ORDERED BY NAMING PARTS FUNCTION AND NOTING THE TUNER PT. NO. — SCHEMATIC PART NO. 950219

NOTE: THE R.F AMP TUBE PRESENTLY USED IS A 6BQ7. IN THE FUTURE A 6BQ7, 6BQ7A OR A 6BZ7 MAY BE USED. THESE THREE TUBES ARE INTERCHANGEABLE, BUT DUE TO POSSIBLE VARIATIONS IN INTERELECTRODE CAPACITIES, SEVERAL TUBES MAY HAVE TO BE TRIED FOR BEST RESULTS.

SCHEMATIC DIAGRAM OF TURRET TYPE TUNER USED ON VHF CHASSIS 120204-B, 120205-B

EMERSON Television Chassis 120179B, 120203B, 120204B, 120205B, (Continued)

ALIGNMENT V.H.F.

ALIGNMENT

a. Equipment Required - A sweep generator, (10 MC. sweep with center frequency of 44 MC. plus all necessary R.F. sweep frequencies as listed in R.F. Table), accurate marker generator, oscilloscope and V.T.V.M. are required for alignment. The marker generator must supply frequencies of 4.5 MC., 40 to 48 MC. and 50 to 216 MC.

b. Alignment Points - The location of all I.F. transformers, Tuned Circuits, and trimmers shown in Figure 9 .

TV R.F. & MIXER ALIGNMENT (V.H.F.)

Connect 3 volt bias battery to both I.F. and R.F. AGC. circuits, positive terminal to chassis, negative terminal to junction of R-19, C-19, C-18. Add a jumper wire from this junction to junction of R-10, R-16, C-8 so that the bias battery is also applied to I.F. AGC.

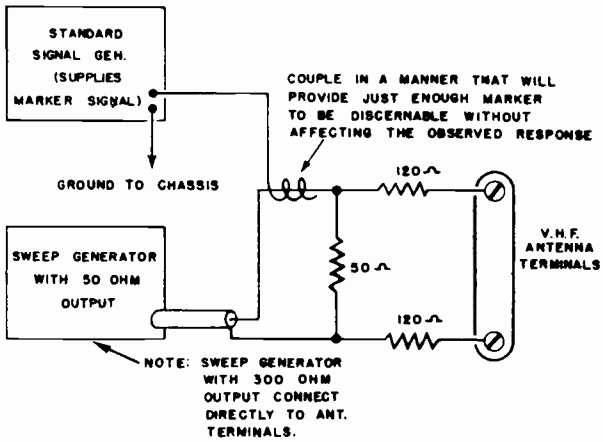

Figure 5 . GENERATOR CONNECTIONS FOR TELEVISION R.F. CHANNEL ALIGNMENT.

SWEEP & MARKER GENERATOR		MARKER GEN.	OSCILLOSCOPE CONNECTIONS	MISCELLANEOUS INSTRUCTIONS	TRIMMER OR SLUG	TYPE OF ADJUSTMENT AND OUTPUT INDICATION
CONNECTIONS	FREQ. RANGE	FREQ.				
Connect as shown in Fig. 5 and adjust sweep controls for width so that complete channel response may be observed as shown in Fig. 6	Channel #12 207 MC. Center Freq.	209.75 MC. Sound Carrier 205.25 MC. Pix Carrier	Vert. input of scope through 10K resistor to test point on tuner Fig. 9 Low side to chassis	Set Channel Selector to #12 NOTE Keep output of R.F. Marker Generator at a level that provides a readable marker but does not distort the curve that is being observed on the scope.	C-2 R.F. Amp. Input Trimmer C-5 R.F. Plate Trimmer C-6 Mixer Grid Trimmer	Adjust Trimmers C-2, C-5 and C-6 to obtain response shown in Fig. 6 IMPORTANT: When adjusting trimmers C-2, C-5 and C-6 it will be noted that the band pass characteristic can be broadened by sacrificing amplitude. It is undesirable to overly broaden the curve as that would result in a loss of sensitivity.
Same as Above	#13 213 MC.	*215.75 MC. **211.25 MC.	Same as Above	Set Channel Selector to #13 (See Note Above)		The r-f band pass characteristic of the other television channels should now be checked without disturbing the settings of trimmers C-2, C-5 and C-6. Adjust the r-f sweep generator and marker generator for operation on the other television channels, observing position of both the sound carrier and picture carrier markers. 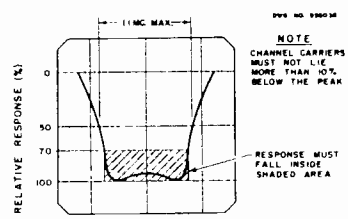 Figure 6 -- TUNER RESPONSE CURVE SHOWING BAND-PASS LIMITS. The response for all channels should meet with the requirements of Fig. 6. To do so it may be necessary to compromise by slightly changing the initial channel #12 adjustments of C-2, C-5 and C-6 while switched to channel which does not conform.
	#11 201 MC.	*203.75 MC. **199.25 MC.		Set Channel Selector to #11 (See Note Above)		
	#10 195 MC.	*197.75 MC. **193.25 MC.		Set Channel Selector to #10 (See Note Above)		
	#9 189 MC.	*191.75 MC. **187.25 MC.		Set Channel Selector to #9 (See Note Above)		
	#8 183 MC.	*185.75 MC. **181.25 MC.		Set Channel Selector to #8 (See Note Above)		
	#7 177 MC.	*179.75 MC. **175.25 MC.		Set Channel Selector to #7 (See Note Above)		
	#6 85 MC.	* 87.75 MC. ** 83.25 MC.		Set Channel Selector to #6 (See Note Above)		
	#5 79 MC.	* 81.75 MC. ** 77.25 MC.		Set Channel Selector to #5 (See Note Above)		
	#4 69 MC.	* 71.75 MC. ** 67.25 MC.		Set Channel Selector to #4 (See Note Above)		
	#3 63 MC.	* 65.75 MC. ** 61.25 MC.		Set Channel Selector to #3 (See Note Above)		
	#2 57 MC.	* 59.75 MC. ** 55.25 MC.		Set Channel Selector to #2 (See Note Above)		

*Sound Carrier Marker
**Picture Carrier Marker

EMERSON Television Chassis 120179B, 120203B, 120204B, 120205B
Alignment Information, Continued

I.F. ALIGNMENT

1) Tune receiver to unused Channel 10 or 12.
2) Connect 3 volt bias battery with negative terminal to I.F. AGC. (Junction R-10, C-8, R-16) positive terminal to chassis.
3) Connect D.C. V.T.V.M. to video test point, low side to chassis.
4) Connect terminated marker generator to floating shield of converted tube V-23 6J6. (Shield raised slightly so that it does not make contact with chassis). Use unmodulated marker. See Fig. 8.

MARKER GENERATOR	ADJUST	PROCEDURE
45.75 MC. Unmodulated	T-4	Peak for maximum response. Adjust output of signal generator so that maximum response does not produce more than -2V. D.C. on V.T.V.M.
43.2 MC. Unmodulated	T-3	
42.0 MC. Unmodulated	T-2	
45.0 MC. Unmodulated	L-3 T-1	
41.25 MC. Unmodulated	L-2	Adjust trap for minimum response. Increase output from signal generator so that a true minimum position can be found.

5) Connect vertical input of an oscilloscope instead of V.T.V.M. to video test point with vertical scope gain set at, or near, maximum. (Horizontal scope sweep set at 400 cycles).

MARKER GENERATOR	ADJUST	PROCEDURE
47.25 MC. 400 Cycles Amp. Mod.	L-1	With signal generator set at maximum output, adjust L-1 for minimum vertical response on scope.

6) Now that all the I.F. coils and transformers have been set, the overall response can be observed and adjusted if necessary.

SIGNAL GENERATOR INPUT			MEASURING INSTRUMENT	ADJUST	PROCEDURE
CONNECTION	FREQUENCY				
	SWEEP	MARKER			
Connect terminated sweep and marker as shown in Fig. 8	Center frequency 44 MC. 10 MC. Sweep	45.75 MC.	Scope connected to Video Test Point low side to chassis	T-4	If 45.75 MC. doesn't lie from 60 to 70% down adjust T-4 (see fig. 7) for tolerances. *

Providing overall curve is within tolerances as shown below, no further adjustments are needed. If band width or tilt is not as specified, repeat entire alignment procedure. If still out then a slight retouching is permissible. TRAPS L-1 and L-2 MUST BE ADJUSTED AS INDICATED ABOVE. DO NOT RE-ADJUST WHILE OBSERVING OVERALL I.F. RESPONSE CURVE.

*KEEP OUTPUT OF SIGNAL GENERATOR AS LOW AS POSSIBLE WHEN OBSERVING THE OVERALL I.F. SHAPE SINCE TUBE OVERLOAD MIGHT RESULT AND THE RESPONSE WILL APPEAR INCORRECTLY FLAT AND WIDE.

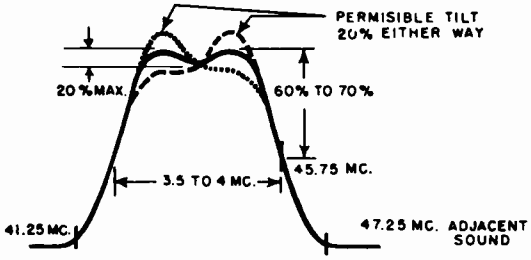

NOTE: It may be impossible to observe the 47.25 MC. marker with the average service equipment due to the high attenuation of trap L-1 (adjacent sound).

Figure 7. OVERALL I.F. RESPONSE CURVE

EMERSON Television

Chassis 120179B, 120203B, 120204B, 120205B

Alignment Information (Continued)

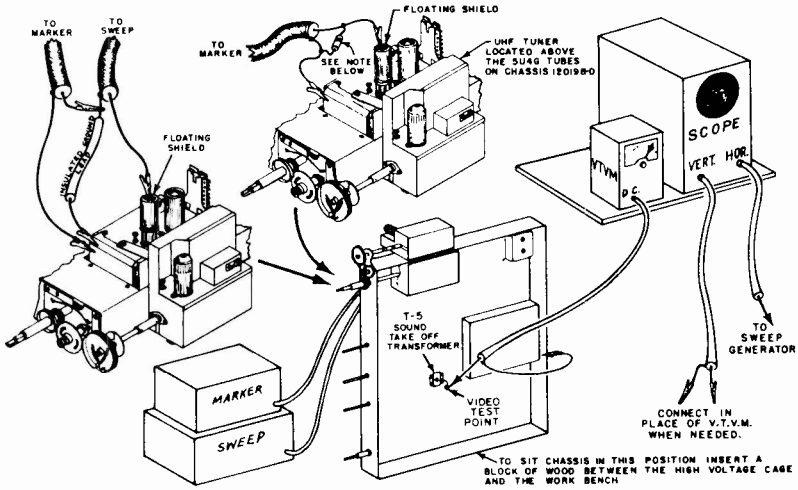

Figure 8. CONNECTIONS FOR I.F. ALIGNMENT

All instrument leads should be dressed as shown and kept as short as possible to prevent interaction between input and output leads. Failure to do this may result in an unstable response indication.

NOTE: It is important that the output cable of the sweep and marker generator be properly terminated in their characteristic impedance which is usually from 50 to 75 ohms. If this termination has not been built into the end of the cable by the instrument manufacturer * then a resistor of the proper value (characteristic impedance) should be connected across the output of each generator cable as shown above.

*If in doubt check your instruction book which is issued by the test equipment manufacturer.

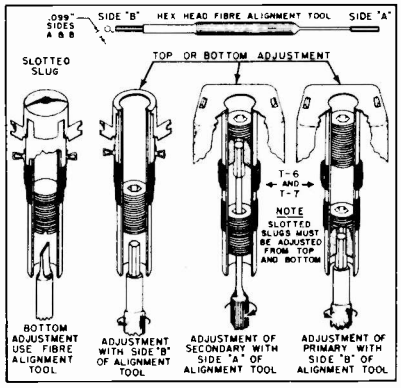

FIGURE 8A

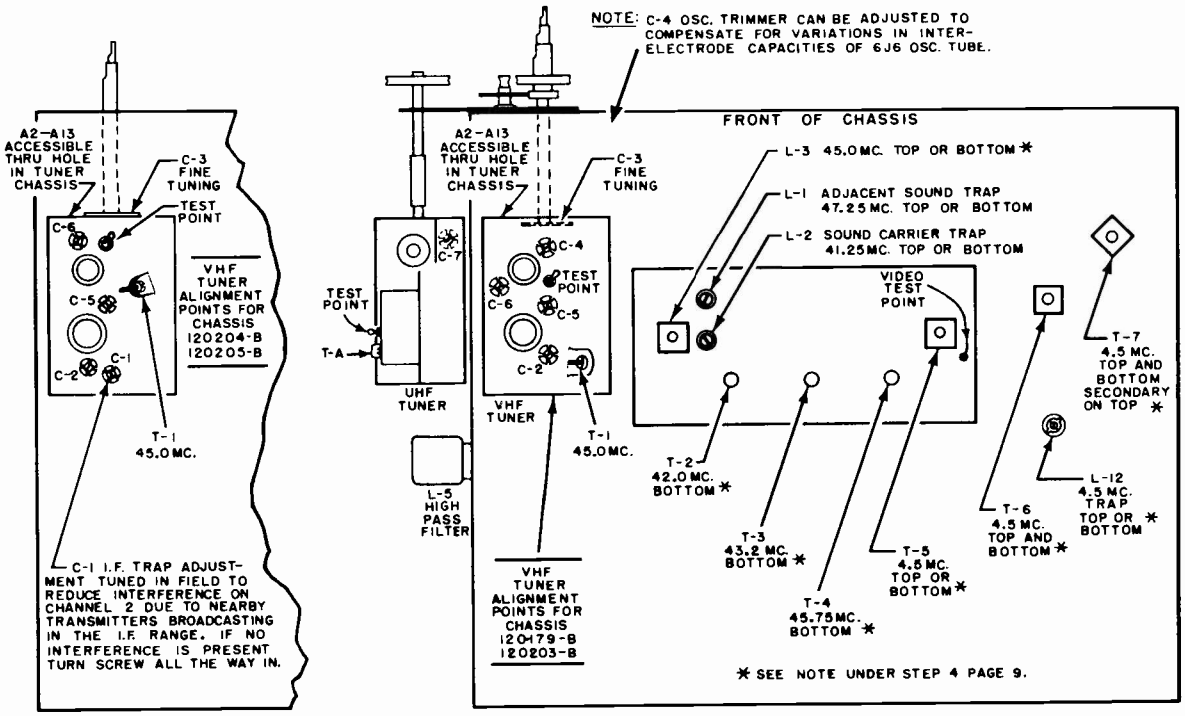

Figure 9. LOCATION OF ALIGNMENT POINTS (TOP VIEW)

EMERSON Television Chassis 120179B, 120203B, 120204B, 120205B, (Continued)

Additional Alignment Information

R.F. OSCILLATOR ALIGNMENT (V.H.F.)

1. Connect maker and sweep generator as shown in Figure 5, low side to chassis.
2. Connect scope to junction L-8, R-22, low side to chassis or video test point.
3. Connect 3 volt bias battery as described under R.F. alignment Page 8.
4. Before undertaking oscillator alignment be sure I.F. circuits are correctly aligned for band pass characteristic and trap settings.
5. During oscillator alignment, it is necessary to set the fine tuning control so that the tooth on the fine tuning cam points downward. On the 470712 tuner the flat of the fine tuning shaft should point downward with respect to the bottom of the chassis.

MARKER SIGNAL GENERATOR FREQUENCY	SWEEP GENERATOR FREQUENCY	MISCELLANEOUS INSTRUCTIONS	TRIMMER OR SLUG	TYPE OF ADJUSTMENT AND OUTPUT INDICATION
*209.75 MC. **205.25 MC.	Channel #12 Center Frequency 207 MC. 10 MC. Sweep	Be sure that fine tuning control has been properly positioned (tooth on the cam pointing down) NOTE During this step and thru-out all succeeding steps it is necessary to: 1. Keep output of sweep generator at a level that does not allow the reading on a VTVM to exceed minus 1 volt when connected across video detector load at minimum sweep width. 2. Keep output of standard signal generator at a level that provides a readable marker but does not distort the curve that is being observed on the scope.	Adjust Slug A-12	NOTE: Before making the following adjustment, advance the vertical gain control on the scope in order to magnify the sound trap portion of the response curve. Then, use a non-metallic screwdriver to adjust channel #12 oscillator slug (accessible thru hole on front of r-f tuner unit) and shift response curve so that sound carrier marker is located at the position indicated below. Now reduce gain control setting of scope to restore pattern to normal amplitude and observe position of picture carrier marker. This marker should appear on the high frequency side of the characteristic curve. The amplitude of the picture carrier should be between 60 and 70% down from peak response.
*215.75 MC. **211.25 MC.	Channel #13 213 MC.	Set Channel Selector to #13 (See note above)		Adjust the r-f sweep generator and marker generator for operation on other television channels; set marker generator to sound carrier frequency. After setting Channel Selector to corresponding channel, adjust oscillator slug thru hole on front of r-f tuner unit. (A-2 to A-13) This permits response curve to be shifted so that sound carrier marker will appear at the position indicated below. 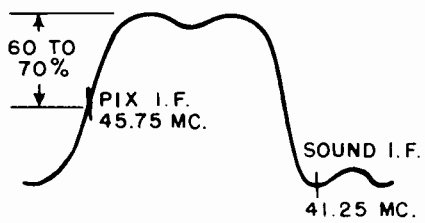 TYPICAL OVERALL RESPONSE CURVE NOTE: Make sure that cam on fine tuning control shaft remains properly positioned during this step (tooth on the cam pointing downward).
*203.75 MC. **199.25 MC.	Channel #11 201 MC.	Set Channel Selector to #11 (See note above)		
*197.75 MC. **193.25 MC.	Channel #10 195 MC.	Set Channel Selector to #10 (See note above)		
*191.75 MC. **187.25 MC.	Channel #9 189 MC.	Set Channel Selector to #9 (See note above)		
*185.75 MC. **181.25 MC.	Channel #8 183 MC.	Set Channel Selector to #8 (See note above)		
*179.75 MC. **175.25 MC.	Channel #7 177 MC.	Set Channel Selector to #7 (See note above)		
* 87.75 MC. ** 83.25 MC.	Channel #6 85 MC.	Set Channel Selector to #6 (See note above)		
* 81.75 MC. ** 77.25 MC.	Channel #5 79 MC.	Set Channel Selector to #5 (See note above)		
* 71.75 MC. ** 67.25 MC.	Channel #4 69 MC.	Set Channel Selector to #4 (See note above)		
* 65.75 MC. ** 61.25 MC.	Channel #3 63 MC.	Set Channel Selector to #3 (See note above)		
* 59.75 MC. ** 55.25 MC.	Channel #2 57 MC.	Set Channel Selector to #2 (See note above)		

NOTE: If an unsatisfactory overall response is obtained for a particular channel, observe R-F amp. and Mixer response curve for that channel (as described in R-F Amp. and Mixer Alignment Table). If characteristic curve does not conform reasonably well within the typical curve shown in Figure 6, then do the following things:

1. Check method of connecting scope, voltmeter and generator leads to eliminate possible distortion of observed response, or:
2. Attempt to obtain a better compromise for R.F. response on all channels by realigning R-F Amp. and Mixer circuits, or:
3. Try replacing Antenna, R-F and Oscillator coils for the particular channel.

*Sound Carrier Marker
**Picture Carrier Marker

R.F. OSCILLATOR ALIGNMENT PROCEDURE

EMERSON Television Chassis 120179B, 120203B, 120204B, 120205B, Alignment Information, Continued

SOUND ALIGNMENT

(A) USING 4.5 mc UNMODULATED SIGNAL GENERATOR

1) Short pin #1 of V-3 Chassis with short jumper wire.
2) Keep output of signal generator low so as to provide a sharp meter indication with adjustment of transformers.

(B) USING TRANSMITTED TV AIR SIGNAL

1) Connect antenna and tune to a good on the air TV station.
2) Adjust fine tuning control for best picture.
3) Adjust antenna coupling for moderate signal so as to provide a sharp meter indication with adjustment of transformers.
4) Meter reading may pulsate due to changes in signal strength; do not confuse with a peak adjustment.

STEP	SIGNAL GENERATOR INPUT		MEASURING INSTRUMENT	ADJUST	PROCEDURE
	CONNECTION	FREQUENCY			
1	Marker Gen. through .01 MF to Pin 7 of V-4 low side to chassis. - or - Connect antenna and tune in a good transmitted TV. signal (any channel)	4.5 MC (Unmodulated) - or - A good on the air TV. channel	Conntec D.C. V.T.V.M. (negative scale) through 10K Resistor to Junction of C-30, R-35, R-36 – low side to chassis.	T-5 Top or Bottom T-6 Top and Bottom	Peak for maximum voltage. Adjust output of signal generator to produce about a one volt D.C. rise on meter (1 volt above noise* voltage) If T.V. signal is used adjust ant. coupling to receiver to produce about the same voltage rise.
2	Same as above.	Same as above.	Connect V.T.V.M. through 10K Resistor to Junction of R-44, C-34 – low side to chassis.	T-7 Top and Bottom (Discriminator on top)	A) Detune Discriminator secondary T-7 for maximum negative meter reading. B) Adjust primary T-7 for maximum negative meter reading. C) Readjust Discriminator secondary (towards original setting) for zero D.C. reading on V.T.V.M. D) Check Audio, if distorted repeat steps A – C.

* The noise voltage is measured under no signal conditions (antenna terminals shorted directly at tuner by means of a short jumper wire; or disconnect 4.5 MC. generator if procedure (A) above is followed.)

4.5 MC VIDEO TRAP ALIGNMENT (L-12)

1. Connect crystal controlled 4.5 mc. signal generator through a .01 mf. condenser to the grid of the video amplifier tube (Pin 1 of V-5, 6CB6) low side to chassis.
2. Set contrast control for maximum contrast (fully clockwise).
3. Connect a V.T.V.M. (D.C. scale) through an R.F. probe to the cathode of the picture tube (Pin 11, yellow lead) low side to chassis.
4. Adjust the 4.5 mc. trap L-12 for minimum reading on the V.T.V.M.

If a crystal controlled generator is not available the video trap can be adjusted in the field by setting the fine tuning control for maximum 4.5 mc. in picture and adjusting the 4.5 mc. trap (L-12) until this 4.5 mc. beat note is reduced. Be sure that video ringing is not introduced from this adjustment since this indicates the trap was aligned at too low a frequency.

ALIGNMENT (UHF TUNER)

The alignment of the tuner is factory set and will actually not require any additional adjustments other than to compensate for differences in 6J6 oscillator tubes. Because of this fact, the only adjustment to be made in the field is trimmer C-7 which is located next to the 6J6 oscillator tube. (See Figure 9)

This trimmer is normally set at the factory to track the highest U.H.F. channel (83). This must be done with a U.H.F. sweep and marker generator. In the field however, this equipment is not readily available and C-7 should therefore be used to track the highest U.H.F. channel received in the area. It is usually best to try a few 6J6 tubes until one is found which more nearly resembles the original, thus requiring only a slight adjustment of C-7.

EMERSON Television Chassis 120179B, 120203B, 120204B, 120205B, (Continued)

CONDITIONS FOR TAKING VOLTAGE AND RESISTANCE READINGS

The voltage and resistance measurements listed were taken on chassis 120205-B, coded with a triangle. △

Due to component variations, voltage and resistance readings may vary slightly from those given here. Slight variations may also be noticed if chassis is not coded as mentioned above. Slight variations may be noticed on chassis 120179-B, 120203-B & 120204-B due to difference in coding for same triangle change.

The deflection yoke and high voltage circuits were connected to take the following readings and waveshapes.

1. Antenna disconnected and antenna terminals shorted on tuner and connected to chassis (use short leads).
2. Line voltage 117 volts (Disconnect power for resistance readings).
3. 3 volt bias battery connected to A.G.C. circuit, positive terminal to chassis, negative terminal to junction of R-10, C-8, R-16 BIAS BATTERY USED FOR VOLTAGE READINGS ONLY.
4. All controls in position for normal picture. (Varied when it directly effects reading).
5. All measurements taken with a vacuum tube voltmeter and ohmmeter.
6. All readings listed in tables were taken between points shown and chassis.
7. Resistance readings are given in ohms unless otherwise noted.
8. N.C. denotes no connection.

WAVE SHAPE ANALYSIS CHART

The waveshapes shown were taken on chassis 120205-B coded triangle. △

Slight peak to peak voltage differences may be noticed on chassis of later triangle codes.

When taking waveshapes on chassis 120179-B, 120203-B and 120204-B bear in mind that a slight peak to peak variations are possible due to differences in chassis coding for the same change. See Production changes on Page 24 for further information.

The peak to peak voltage given may also vary slightly depending on signal strength and component variations.

To accurately observe the wave shapes, the relatively high input capacity of an oscilloscope must be reduced so as not to change the operating characteristics of the television set.

1. Connect antenna and tune receiver to channel where best reception has been obtained in the past.
2. Low end of the probe is connected to CHASSIS and the contrast control is set at MAXIMUM CONTRAST.
3. The 30 and 7875 C.P.S. oscilloscope sweep settings are used so as to permit the serviceman to observe two cycles of the wave shape.

NOTE: A wave shape seen in your oscilloscope may be upside down from same wave shape shown here. This will depend on the number of stages of amplification in the oscilloscope used.

RESISTANCE READINGS

SYMBOL	TUBE PIN NUMBERS								
	PIN 1	PIN 2	PIN 3	PIN 4	PIN 5	PIN 6	PIN 7	PIN 8	PIN 9
V-1	1 MEG.	47	.02	0	*13K	*13K	0		
V-2	1 MEG.	47	0	0	*13K	*13K	0		
V-3	0	180	.02	0	*13K	*13K	0		
V-4	.02	1 MEG.	.6	0	150K	0	4.7K		
V-5	1 MEG.	CONTRAST 0 to 1.5K	.02	0	*22K	*13K	CONTRAST 0 to 1.5K		
V-6	1.05 MEG.	0	0	.02	*13K	*13K	267		
V-7	47K	0	0	.02	*13K	8.8K	0		
V-8	0	100K	0	.02	180K	0	100K		
V-9	10 MEG.	0	0	.02	1.5 MEG.	1.5 MEG.	233K		
V-10	N.C.	.04	*16.5K	*16.5K	470K	V. CONTROL 0 to 210K	0	470	
V-11	*45K	14.7K	0	.02	.02	5.5K	2.3 MEG.	0	0
V-12	22K	264K	100K	0	0	*18K	330K	4.7K	.02
V-13	2.4 MEG.	*37K	1.2K	HORIZ. HOLD CONTROL 100K-140K	440K	1.2K	.02	0	
V-14	N.C.	0	100	*22K	476K	100	.02	*22K	PLATE CAP OF 6CD6 *30K
V-15	PINS 2 AND 7 INFINITE PLATE *30K								
V-16	*32K	N.C.	*32K	N.C.	*14K	N.C.	.05	0	6AU4GT USED
V-18	163K	2.2 MEG	FRINGE COMPENSATOR OFF 18K	0	0	2.2 MEG.	470K	FILAMENT	
V-18	100K	163K	2.2K	VERT. HOLD CONTROL 820 to 1.8K	VERT. SIZE CONTROL 1.5 MEG. to 3.2 MEG.	2.2K	.03	0	
V-19	N.C.	0	*14.2K	14.3K	2.5 MEG.	N.C.	.02	VERT. LIN. CONTROL 470 Ω to 5.4K	
V-20	N.C.	*14K	N.C.	15	N.C.	15	N.C.	*14K	
V-21	N.C.	*14K	N.C.	15	6.5	15	N.C.	*14K	

	PIN 1	PIN 2	PIN 10	PIN 11	PIN 12
V-24	0	0	820K	BRIGHTNESS CONTROL 220K to 240K to 220K	.02

* Varying Resistance – Wait until meter settles (about 30 seconds).

GENERAL ELECTRIC

("F" SERIES CHASSIS)

Models 17C127, 17T15-17, 21C114-C115-C116-C117-C119 21C120-C121, 21T10-T11-T12-T14-T15-T19

UHF-17T15, UHF-17T17, UHF-17C127, UHF-21C115, UHF-21C116, UHF-21C117, UHF-21C119, UHF-21C120, UHF-21C121, UHF-21T10, UHF-21T11, UHF-21T12, UHF-21T19.

These receivers are 12-channel models, into some of which the General Electric model UHF-70, UHF-80 or UHF-90 tuner has been installed.

These models are UL listed and incorporate 18 tubes and 4 rectifiers (two power rectifiers and one high-voltage rectifier and a crystal diode). Receivers equipped with a UHF tuner unit contain two additional tubes and one additional crystal diode.

(Service material on pages 57 to 62.)

HORIZONTAL STABILIZER COIL—The coil, L251, should be adjusted so that the horizontal sync will remain locked over the entire range of the horizontal hold control, R264. Also, the "pull-in" range of sync should be evenly distributed on each end of the horizontal hold control range. This may be checked by switching off and on a station and observing the "pull-in" ability at different settings of the control.

In order to adjust the coil properly follow the given procedure:

1. Remove tube V106. Tune in a very weak television signal.
2. Short circuit terminals of stabilizer coil, L251.
3. Adjust horizontal hold control, R264, to bring received picture closely into sync.
4. Remove short circuit from across terminals of L251.
5. Tune the stabilizer coil to bring picture back into a closely synced condition. The stabilizer coil will tune to two positions which will bring the picture into sync. The correct position is the one with the core almost all the way into the coil.
6. Replace tube V106; check lock-in ability of horizontal sync on available channels.

It is absolutely essential that the stabilizer coil and the horizontal hold control be correctly adjusted, and once adjusted, be left alone.

It should be noted that in some receivers the stabilizer coil has been relocated and is available at the top rear of the chassis.

To Remove Safety Glass

MODELS 17T15, 21T10-T11-T12

1. Remove the two buttons holding the corner brackets, see Fig. 10.
2. Unscrew the two screws securing the corner brackets to the cabinet and remove brackets.
3. Tilt top of safety glass away from cabinet and lift glass out of the bottom slots. To replace safety glass, use above order in reverse.

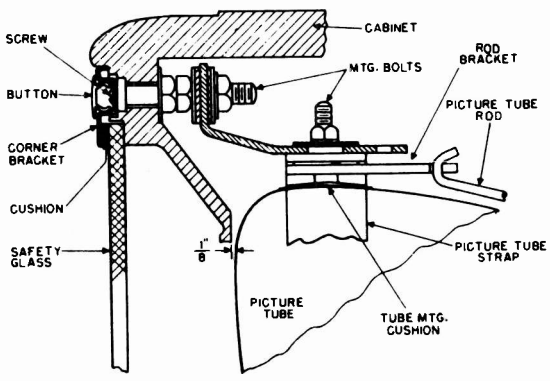

Fig. 10. Detail of Picture Tube Mount (Models 17T15, 21T10-T11-T12)

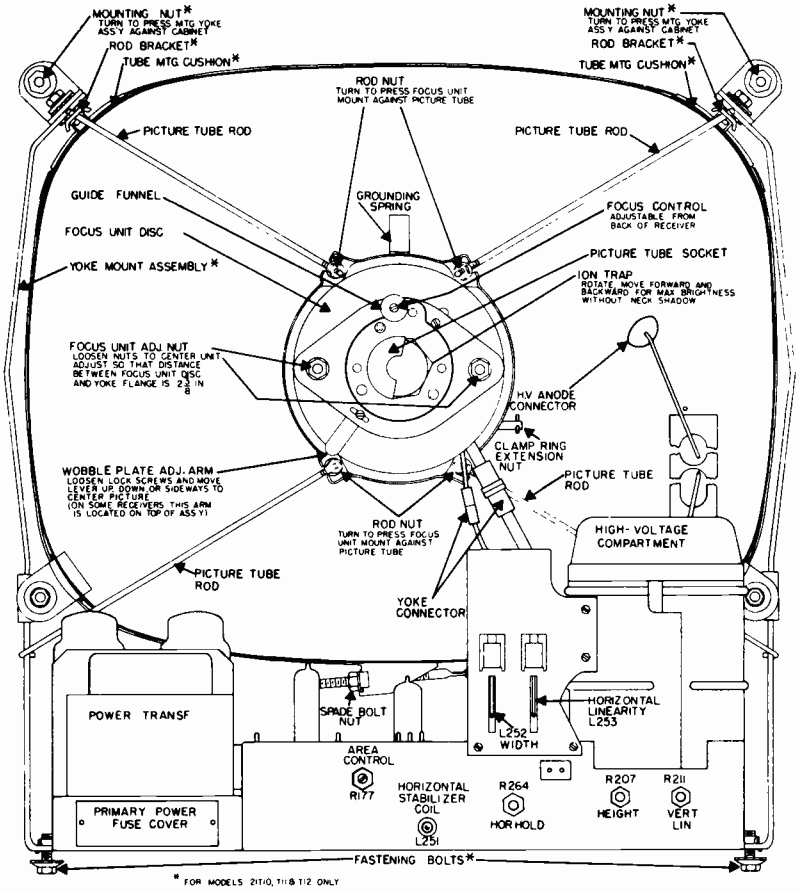

Chassis and Picture Tube Assembly (External Magnetic Focus)

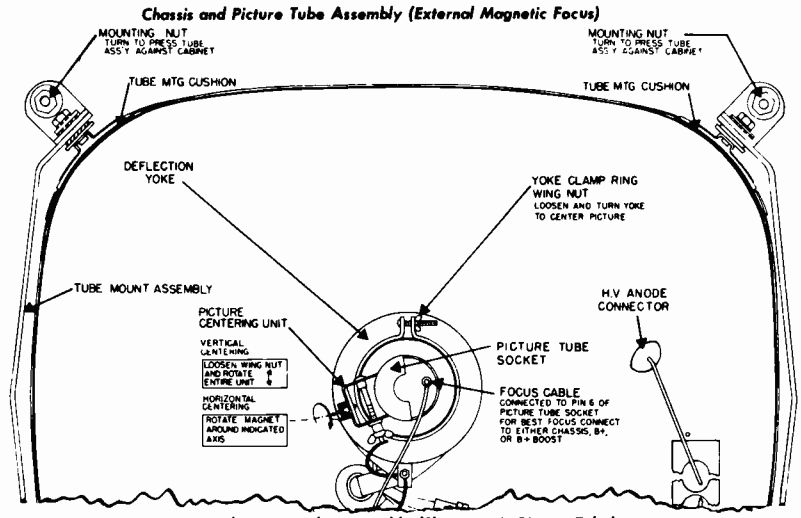

Chassis and Picture Tube Assembly (Electrostatic Picture Tube)

GENERAL ELECTRIC "F" Series, Continued

VIDEO I-F ALIGNMENT

The following alignment data is divided into two separate procedures. Because of the large trap attenuation, the conventional method of sweep observation of these traps sometimes becomes difficult. Hence all traps should be pretuned by the application of an amplitude-modulated signal and then adjusted for minimum signal output.

The second portion of this procedure involves the shaping of the i-f response curve in the conventional manner by the application of a sweep generator signal. During this procedure observe the usual precautions regarding warm-up time, equipment cable lead dress and generator output cable termination.

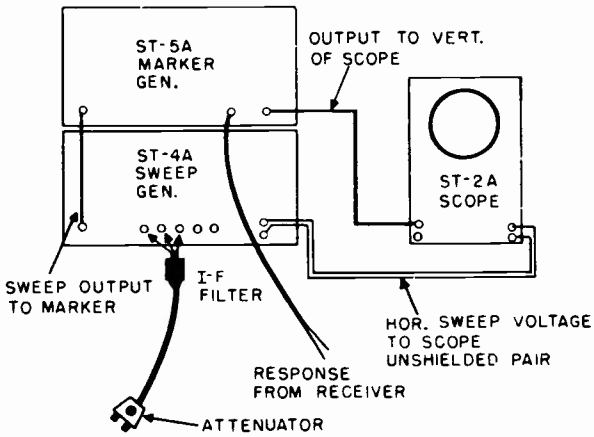

Fig. 20. I-F Sweep Equipment Connection Diagram

TRAP ALIGNMENT

GENERAL:

As noted above, an AM signal is required for trap alignment. In many cases, the technician will have a suitable AM signal generator available. It should cover the range of 40.0 to 48 megacycles at fundamental frequency, with available internal 400-cycle modulation. When this type of signal is used, the traps should be adjusted for minimum 400-cycle signal as observed on the oscilloscope.

Users of General Electric sweep alignment equipment may obtain the required amplitude-modulated carrier frequencies by a simple manipulation of the equipment controls

Those technicians who do not have either of the above equipment available are advised to omit the trap alignment procedure. With the exception of the video amplifier 4.5 mc trap L156, the traps will not become seriously misaligned due to tube changes. The above-mentioned 4.5 mc trap may be sweep-aligned, if desired, in which case a 4.5 mc sweep signal should be used in step 2, of the alignment chart. The trap may then be tuned to minimum response at 4.5 mc, which should be crystal marker calibrated.

NOTES:

1. Allow receiver and alignment equipment to warm up for 15 minutes before proceeding.
2. Set channel selector switch to Channel 11 position. Turn the fine-tuning control fully clockwise.
3. Turn the volume control and the area control fully counterclockwise. Turn the picture contrast control fully clockwise.
4. Observe alignment wave forms at test point V (picture tube).
5. Remove V106 and V113 during alignment.

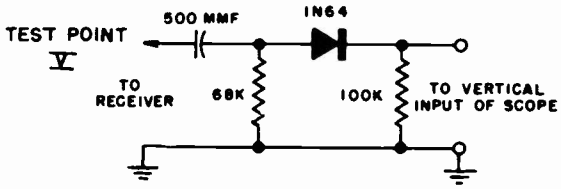

Fig. 33. Detector Network

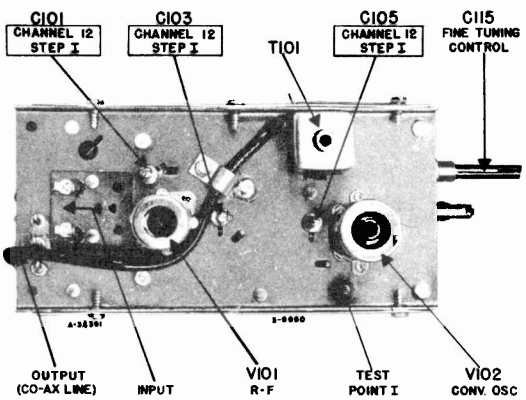

Fig. 28. Top View of R-F Tuner, RJX-057

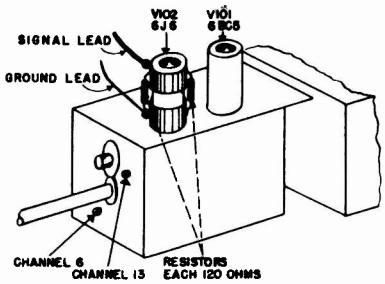

Fig. 24. Oscillator Adjustments

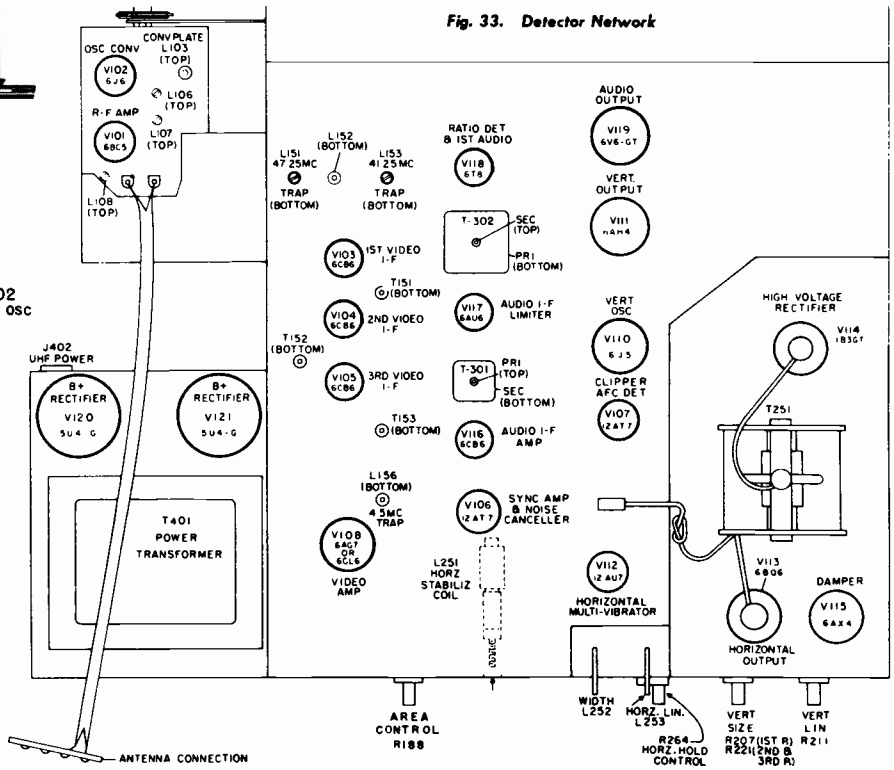

Fig. 32. Tube and Trimmer Location

TRAP ALIGNMENT CHART

STEP	AM—GENERATOR INPUT POINT	AM—GENERATOR FREQUENCY	ADJUST FOR MINIMUM OUTPUT	REMARKS
1	Test Point I (R-F Tuner Unit) See Fig. 28	47.25 mc	L151	May require maximum oscilloscope vertical gain.
		41.25 mc	L153	
2	Test Point IV (Diode Load)	4.5 mc	L156	Connect detector network between oscilloscope input and and receiver test point V as shown in Fig. 33.

I-F SYSTEM SWEEP ALIGNMENT

GENERAL:

After the traps have been set at their proper frequencies the i-f curve may be shaped.

The following procedure requires the use of a simple sweep signal coupling jig as depicted in Fig. 24. This device is made from a tube shield cut in two halves, between which are soldered two 120-ohm resistors. The shield is placed over the 6J6 oscillator converter tube during the i-f alignment and hence provides loose capacitive coupling to the 6J6 i-f plate circuit. The resistors perform the dual function of supporting the upper half-shield and terminating the sweep output cable. The generator cable shield should be connected to the lower half shield, and the "signal" lead connected to the upper half-shield.

NOTES:

1. Turn picture contrast control to minimum.
2. Observe sweep waveform at test point III through a 10,000-ohm resistor. Oscilloscope should be calibrated so that ¾-volt signal will provide 2-inch vertical deflection.
3. Apply a negative 5-volt battery bias voltage to test point VIII. Connect positive lead of battery to chassis.
4. Note that the following procedure uses 45.0 mc as the 100% reference point. Maintain the sweep generator output level so that the baseline to 45 mc marker amplitude equals two inches.

PRE-PEAKING:

Should difficulty be experienced in obtaining the proper video i-f response, the tuning of the individual coils may be checked.

If the coils are each peaked at the below-specified frequencies, an over-all i-f response curve which closely approximates the proper curve will be achieved. After this is done, the sweep method may be used to thus permit proper final curve shaping. This peaking may be done by using an AM signal as prescribed for setting the traps or the sweep method may be used by adjusting the coils for maximum amplitude at the desired marker points.

PEAKING FREQUENCIES
L103—44.15 mc
L152—44.15 mc
T153—44.15 mc
T151—45.25 mc
T152—42.9 mc

VIDEO I-F ALIGNMENT CHART

CONNECT SWEEP GENERATOR	ADJUST	DESIRED RESPONSE	REMARKS
Into alignment shield jig and r-f tuner chassis, see Fig. 24	Peak T153, L103 L152 at 44.15 mc T152 set 42.5 mc @ 55% T151 set 45.75 mc @ 40%	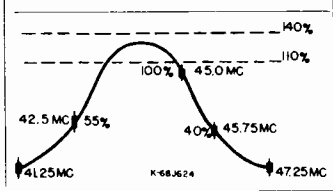	T153, L103 and L152 should be readjusted slightly, if necessary, to shape peak region of curve as shown. Peak of curve may fall anywhere between the limits of 110% and 140% of 45 mc 100% reference point.

AUDIO I-F ALIGNMENT

NOTES:

1. Tune in a television signal. This will provide a 4.5 mc signal source for audio i-f alignment. Keep the volume control turned down unless the speaker is connected.
2. Step 3 below requires a meter connection to the electrical midpoint of the ratio detector load circuit. To do this, connect two 100,000-ohm resistors in series between V118A (6T8) pin 2 and chassis. These two resistors should be chosen, as accurately as possible, for equal resistance.

AUDIO I-F ALIGNMENT CHART

STEP	CONNECT VTVM OR 20,000 OHMS/VOLTMETER	ADJUST	METER INDICATION	REMARKS
1	To Test Point VI and chassis	T301 (top and bottom core*)	Adjust for maximum deflection.	Voltage to be read is negative with respect to chassis.
2	V118A, pin 2 and chassis	T302 primary (bottom core)		
3	Between Test Point VII and center of two 100,000-ohm resistors, see note 2.	T302 secondary (top core).	Adjust for zero volts d-c output	Repeat steps 1, 2 and 3 to assure proper final adjustment.

*Some receivers use only one core.

GENERAL ELECTRIC "F" Series Circuit Diagram

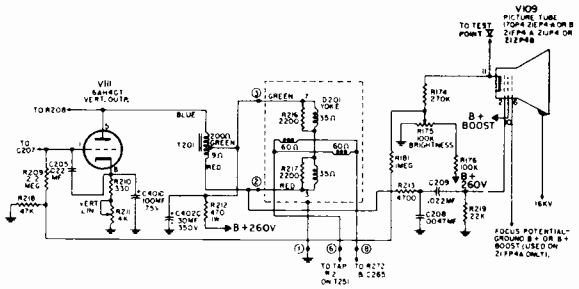

Vertical Output Blanking Circuit & Pix Tube Circuit (Mid & Late Production)

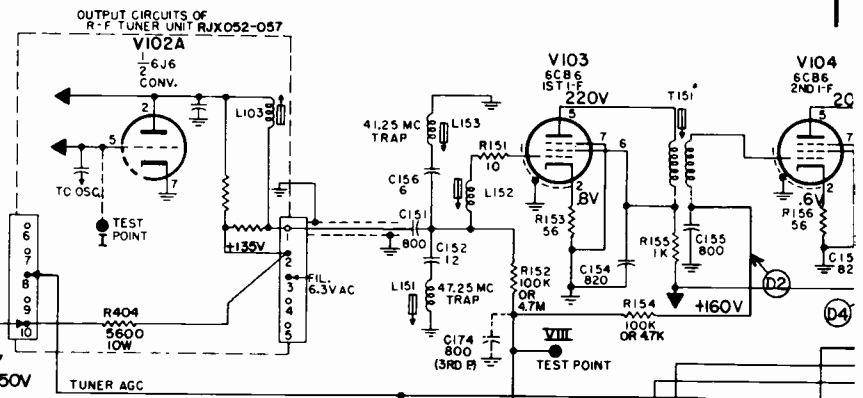

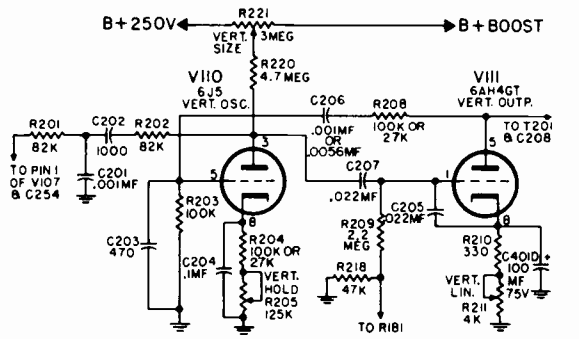

Vertical Size Circuit (Mid & Late Production)

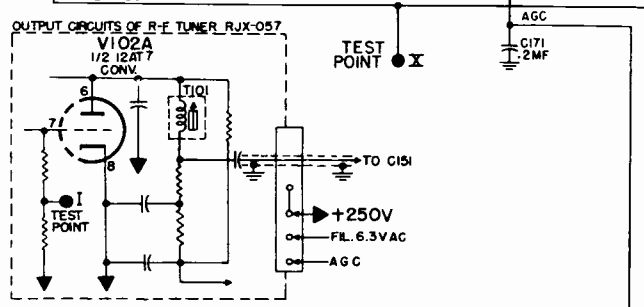

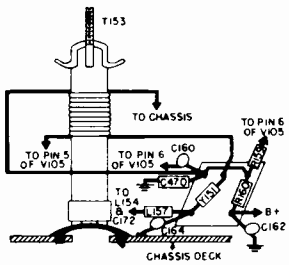

Wiring Diagram for T153

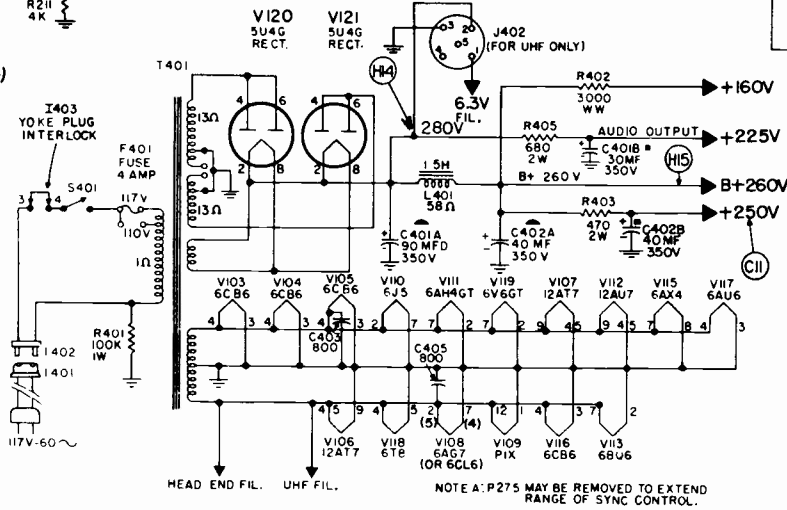

NOTE A: P275 MAY BE REMOVED TO EXTEND RANGE OF SYNC CONTROL.

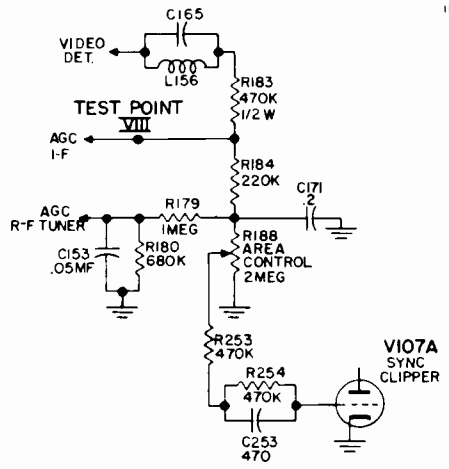

Late Production AGC Circuit

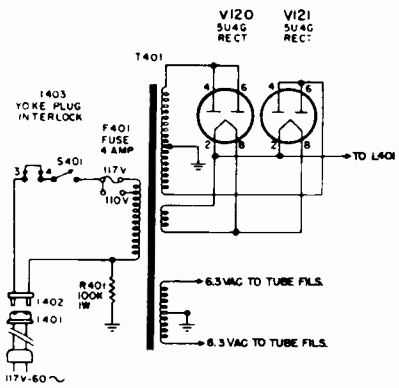

Late Prod. Power Transformer Wiring

ALL RESISTANCES IN OHMS.
ALL CAPACITANCES IN MMFD UNLESS OTHERWISE NOTED.
K=1000
MEG=1,000,000
(1ST P.) INDICATES 1ST PRODUCTION.
(2ND P.) INDICATES 2ND PRODUCTION.
(3RD P.) INDICATES 3RD PRODUCTION.
DOTTED LINES INDICATE LATER PRODUCTIONS.
CIRCLED NUMBERS AT YOKE REFER TO PIN CONNECTIONS ON YOKE PLUG

* SCOPE SYNCED AT 1/2 VERT. FREQUENCY.
** SCOPE SYNCED AT 1/2 HORIZ. FREQUENCY.
WAVE SHAPES TAKEN WITH NORMAL CONTROL SETTINGS & NORMAL SIGNAL APPLIED.

VOLTAGE MEASUREMENTS ARE IN RESPECT TO CHASSIS WITH A 20,000 Ω/VOLT METER, WITH CONTROLS SET FOR NORMAL OPERATION, NO SIGNAL APPLIED.
▲ MEASURED WITH VTVM
ENCIRCLED LETTERS REFER TO TERMINAL BOARDS OF TEST POINT DIAGRAM.

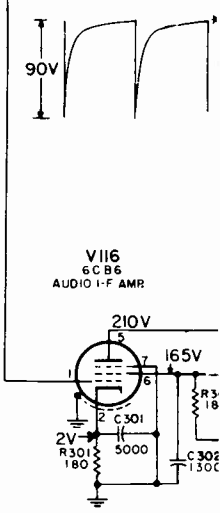

GENERAL ELECTRIC "F" Series

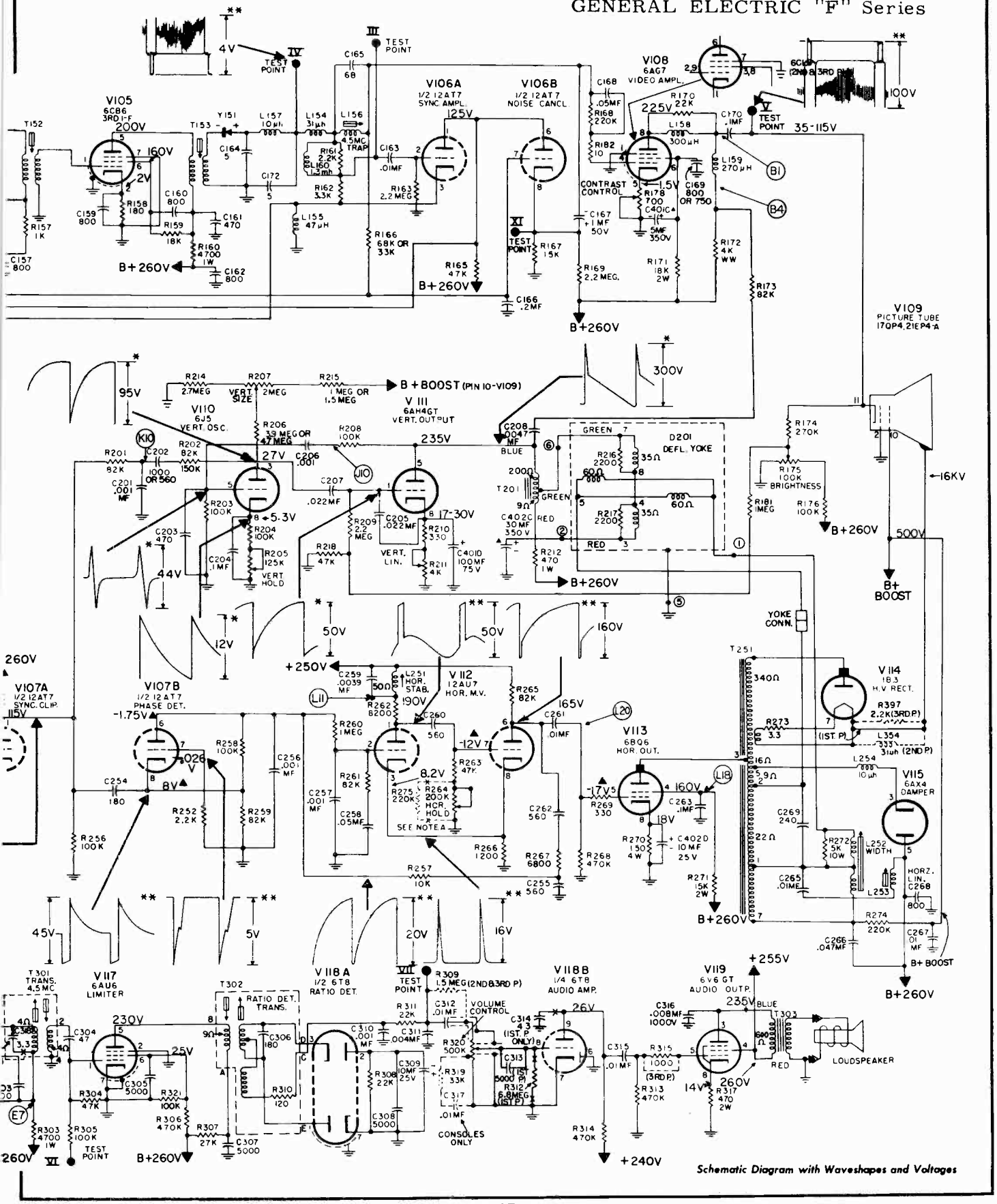

Schematic Diagram with Waveshapes and Voltages

GENERAL ELECTRIC "F" Series

TROUBLE SHOOTING (Cont'd)

SYMPTOM	CHECK FOR
DEFECTS OF THE SYNC SECTION	
A. Weak or no horizontal sync; vertical sync, picture and sound satisfactory	1. Sync amplitude at input to discriminator tube, V107B 2. Defective multivibrator components, C260, R263, R264 and R266 3. Leaky or shorted capacitor, C260 4. Wave form feedback components, R257, R267, C255, C262 5. Defective L251 6. Open C259 or R260
B. Weak or no composite sync, otherwise picture and sound normal	1. Defective coupling capacitor, C252 or C253 2. Incorrect value of plate resistor, R255 or R256 3. Insufficient amplitude of composite signal applied to sync amplifier from video detector; check video detector circuit
C. No vertical sync, horizontal sync satisfactory	1. Sync pulse at input of vert. oscillator, check integrator circuit 2. Vertical oscillator frequency, if far off from 60 cps, check vertical oscillator components such as C207, R204, R209 and R218 3. Leakage in feedback capacitor, C206
D. Picture displaced to left, right edge wavy	1. Open or low value of capacitor, C253
E. "Gear Tooth" effect	1. Open or low value capacity of C258 2. Open or high resistance of R261
F. Noise "tearing" picture (noise inverter failure)	1. Low value, R169 2. Open C167. 3. Open or high value, R167
G. Weak composite sync (attributable to excessive noise inverter clipping)	1. Low value of R167 2. Leaky or shorted C167
DEFECTS OF THE HORIZONTAL DEFLECTION CIRCUITS	
A. Too great sweep width, reception normal otherwise	1. Open width control coil (shunt section) 2. Open winding between width coil shunt section taps on horizontal output transformer, T251
B. Inadequate picture width	1. Correct waveshape and amplitude of input "drive" voltage at grid of V113 2. Leaky capacitor C265 3. Shorted width control L252 shunt section or defective deflection coil, D251 4. Defective output transformer T251 shorted turns or arc-over 5. Low emission of tube, V113, V115 6. Low B+ voltage to tubes V112, V113
C. Single vertical line in center, sound normal	1. Open horizontal deflection coils, D251 2. Open yoke plug connection 3. Open width coil (series section)
D. Poor horizontal linearity	1. Shorted linearity control 2. Defective yoke, D251 3. Defective capacitors C265, C266
DEFECTS OF THE VERTICAL DEFLECTION CIRCUIT	
A. Poor vertical linearity, inadequate height	1. Low emission of sweep output tube, V111 2. Improper grid input "drive" voltage at V111 3. Defective sweep output transformer, T201 4. Low B+ voltage to sweep output tube V111 5. Low value of cathode capacitor, C401D
B. Inadequate picture height	1. Rise in resistance value of vert. oscillator plate resistor, R206 or R215 2. Incorrect value of plate voltage on output tube, V111 3. Low value capacitor in cathode of vert. output tube, C401D (This often results in poor linearity) 4. Weak vertical deflection tube, V110 or V111
C. No vertical deflection	1. Open vertical deflection coils, D201 2. Defective sweep output transformer, T201 3. Shorted capacitor C205 4. Poor contacts in yoke plug
D. Poor vertical linearity, height satisfactory	1. Low value capacitor, C205 2. Vertical output tube, V111

MOST-OFTEN-NEEDED 1955 TELEVISION SERVICING INFORMATION

GENERAL ELECTRIC

The "G", "J", and "K" Line sets are similar to "F" Series and to each other. For circuit diagram of "G" Line see pages 64-65, for "J" pages 66-67, and "K" page 68.

"G" Line, Models 17T20, 21C103, 21C104, 21T22, 21T23, 21T24, 21T25.

"J" Line, Models 21C350, 21C351, 21T30, and 21T31.

"K" Line, Models 17T14, 17T15, 17T16, 21T17, and 21T18.

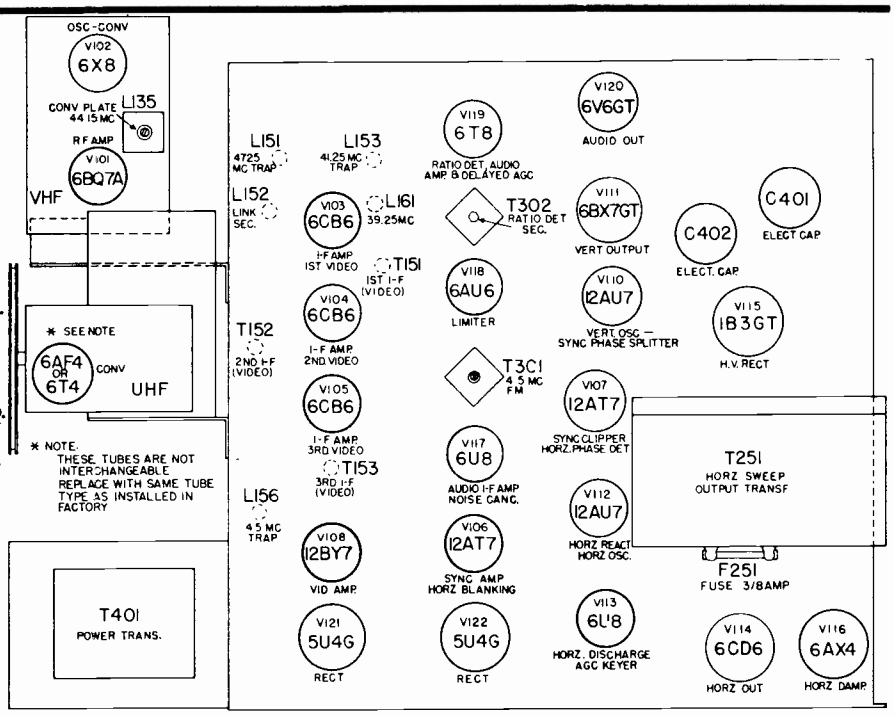

Location of tubes and adjustments in "J" Line sets.

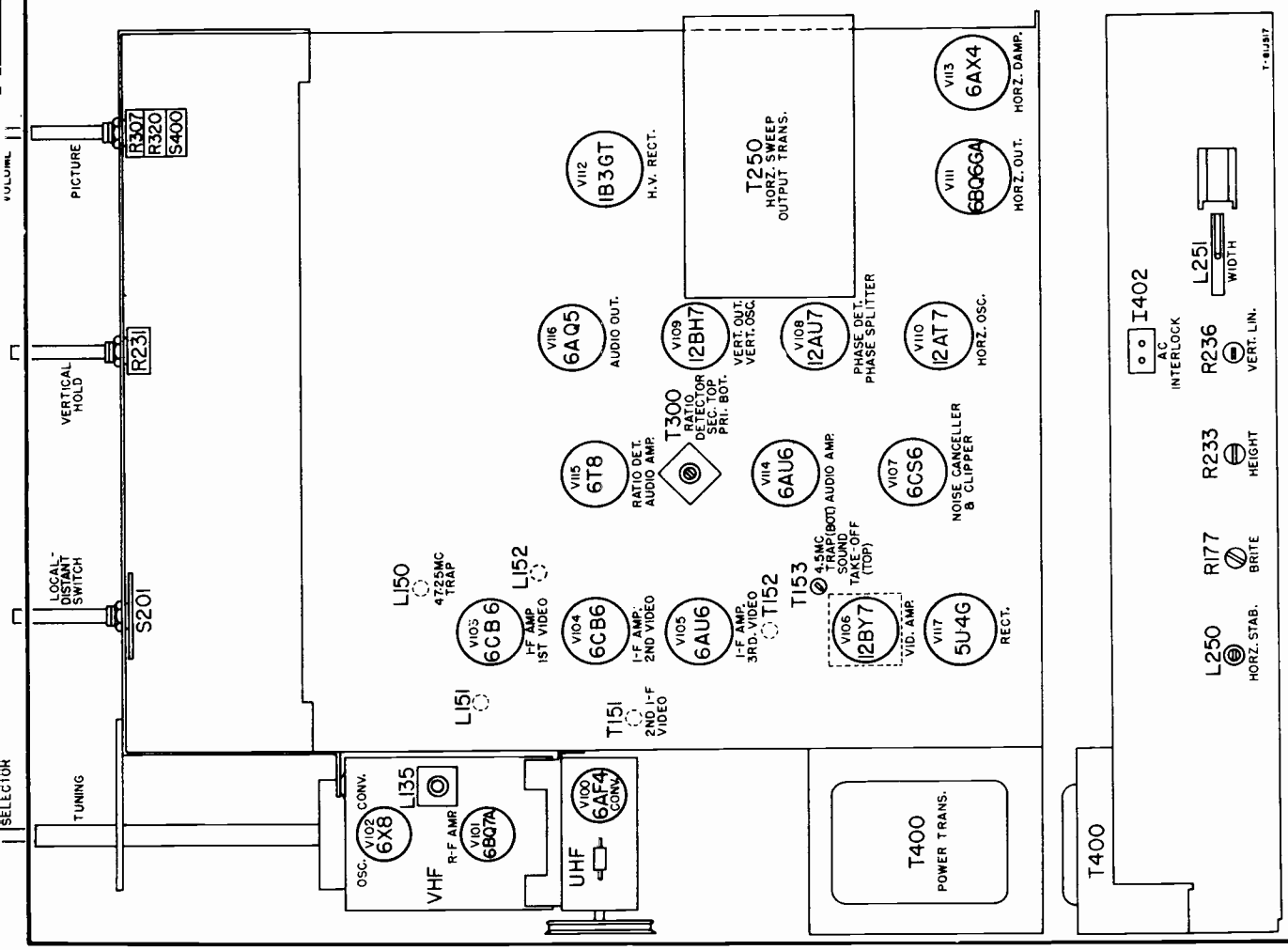

Location of tubes and adjustments in "K" Line sets. These locations in "G" Line sets are very similar.

GENERAL ELECTRIC "G" Line, Models 17T20, 21C103, 21C104, 21T22 to 21T25

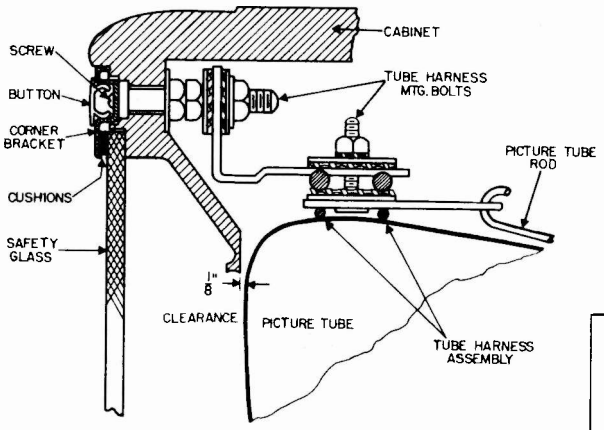

DETAIL OF PICTURE TUBE MOUNT
(PLASTIC MODELS)

PICTURE TUBE REMOVAL AND INSTALLATION

Details regarding picture tube rods, tube holder, focus unit mounting hardware and ion trap do not apply where internal magnetic focus tubes are used. The shunt focus control and deflection yoke with picture centering assembly are simply withdrawn over the neck of the I.M.F. tube-- the yoke clamp wing nut is loosened to allow removal of the deflection yoke.

Removal Of Picture Tube

ASSEMBLIES IN PLASTIC CABINET:

1. Remove the chassis.
2. Lay cabinet, face downward, on padded non-scratching surface.
3. Remove ion trap.
4. Remove the two focus unit mounting nuts and slide focus unit off tube neck.
5. Loosen yoke clamp ring wingnut and slide deflection yoke off tube neck.
6. Loosen the four picture tube rod nuts. Remove rods, and picture tube holder with focus unit mount.
7. Remove mounting nuts and washers securing tube harness assembly at the bottom and in the two upper inside corners of the cabinet.
8. Carefully remove tube and harness assembly from cabinet. Lay tube, face downward, on bench.
9. Loosen spade bolt nut and lift tube from harness assembly.

ASSEMBLIES IN WOOD CABINET:

1. Use same procedure of steps 1 through 6 described above for tube assemblies in plastic cabinets. Then continue disassembly as follows.
2. Remove Phillips screws at lower corners of picture mask. Move tube and mask slightly toward bottom of cabinet to free mask from cabinet top rail. Remove and place tube, face downward on bench.
3. Loosen spade bolt nut and lift tube from harness strap assembly.

To reinstall a picture tube the applicable (plastic or wood cabinet) tube removal instruction procedures may be applied in reverse.

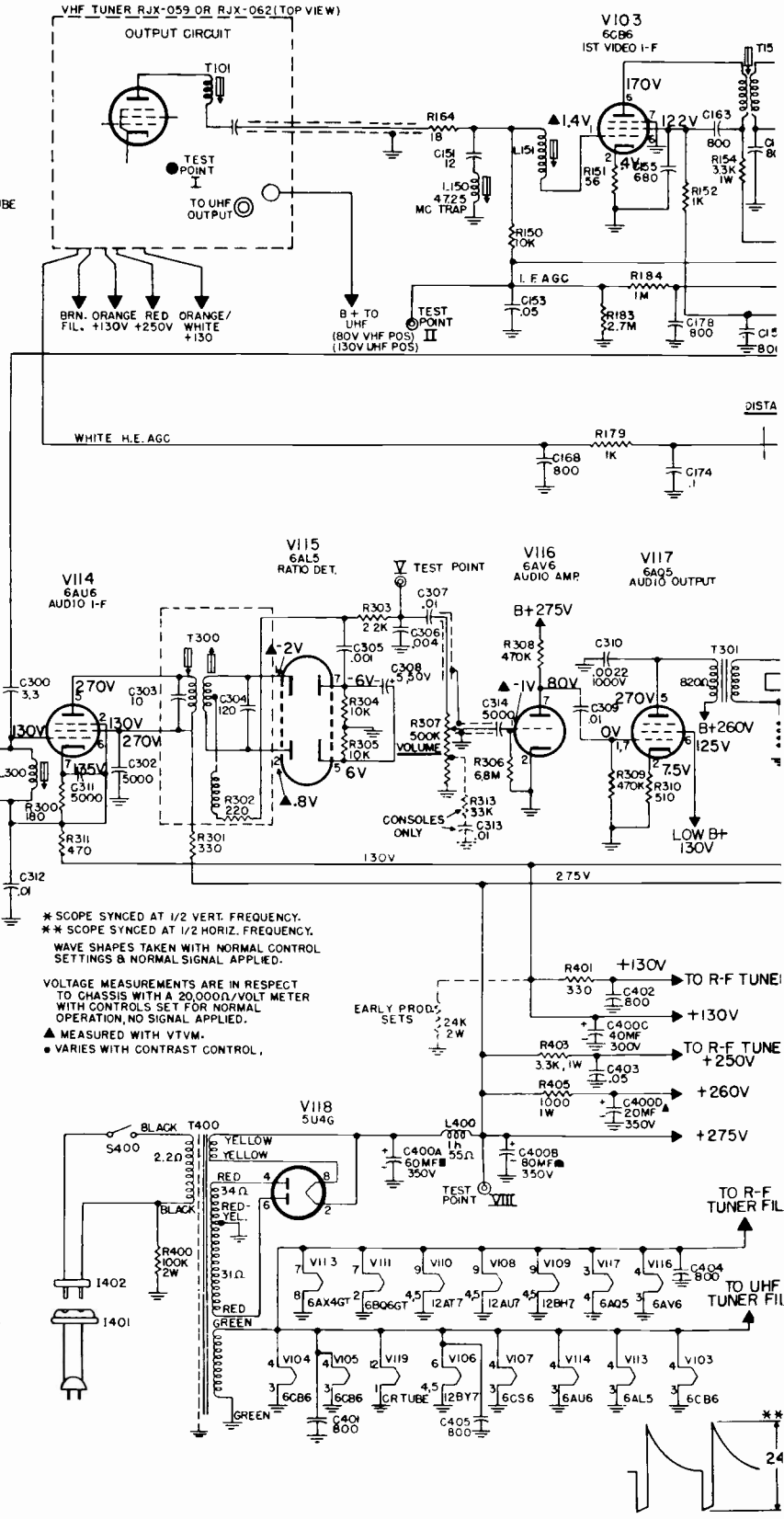

MOST-OFTEN-NEEDED 1955 TELEVISION SERVICING INFORMATION

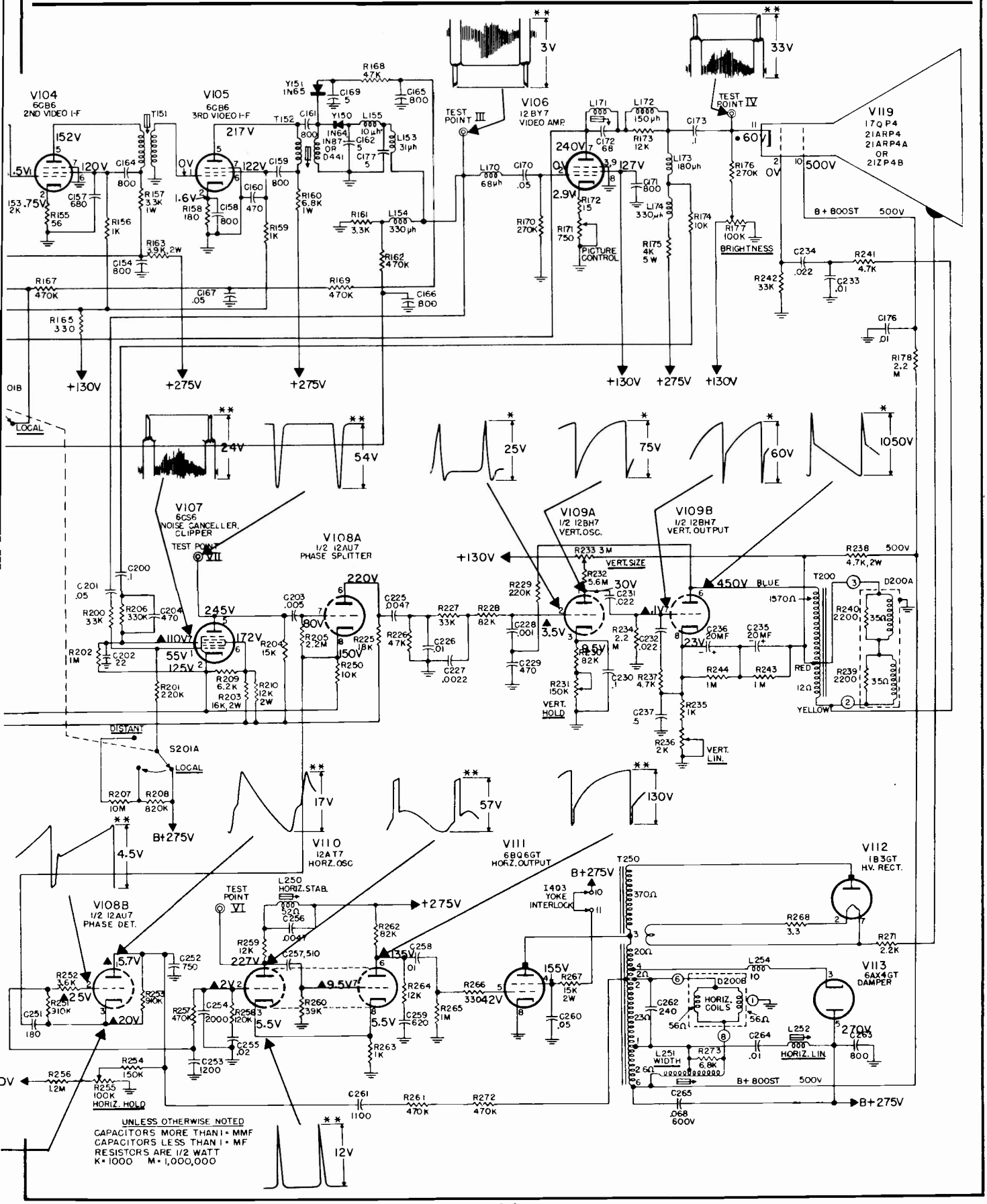

MOST-OFTEN-NEEDED 1955 TELEVISION SERVICING INFORMATION

GENERAL ELECTRIC "J" Line, Models 21C350, 21C351, 21T30, and 21T31

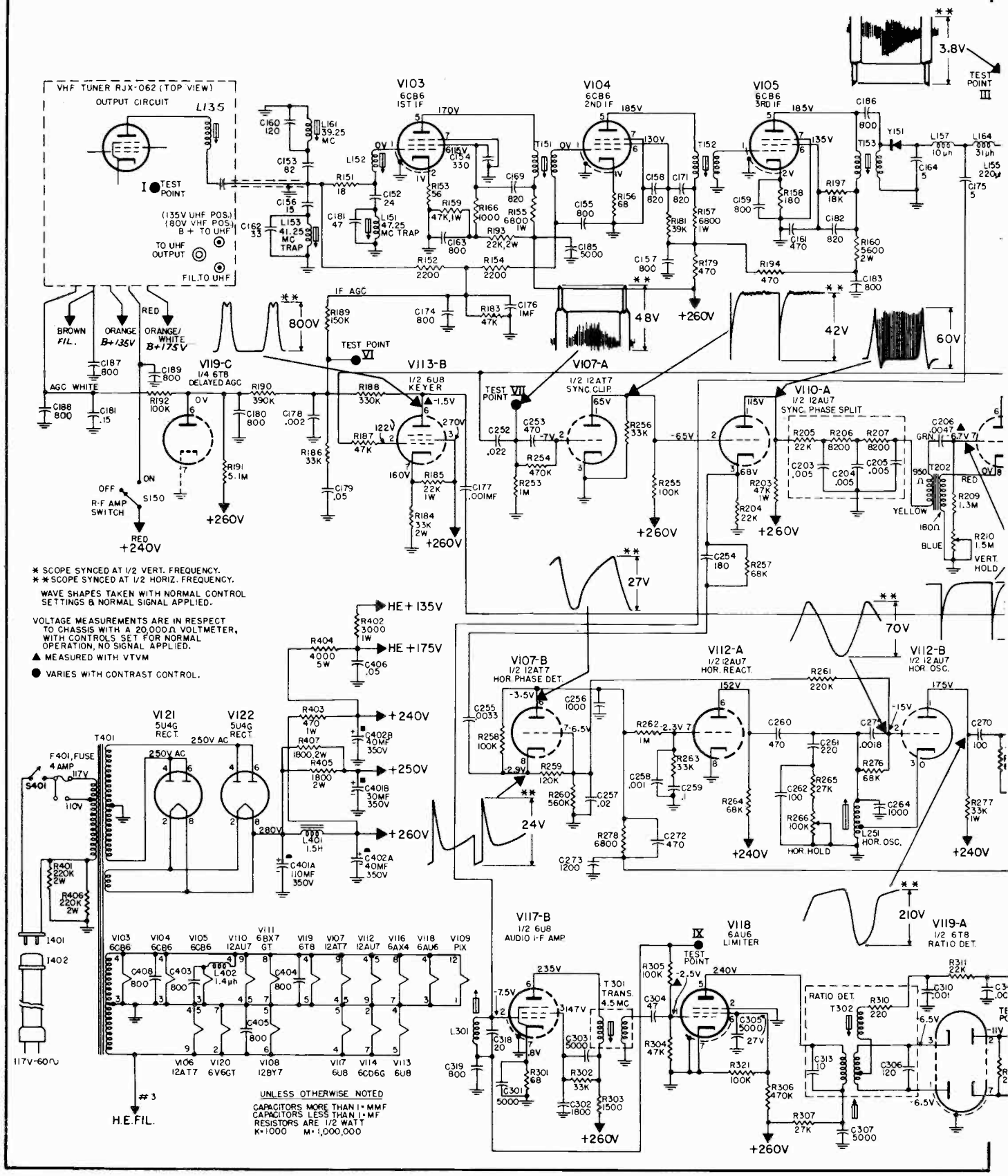

GENERAL ELECTRIC "J" Line, Models 21C350, 21C351, 21T30, and 21T31

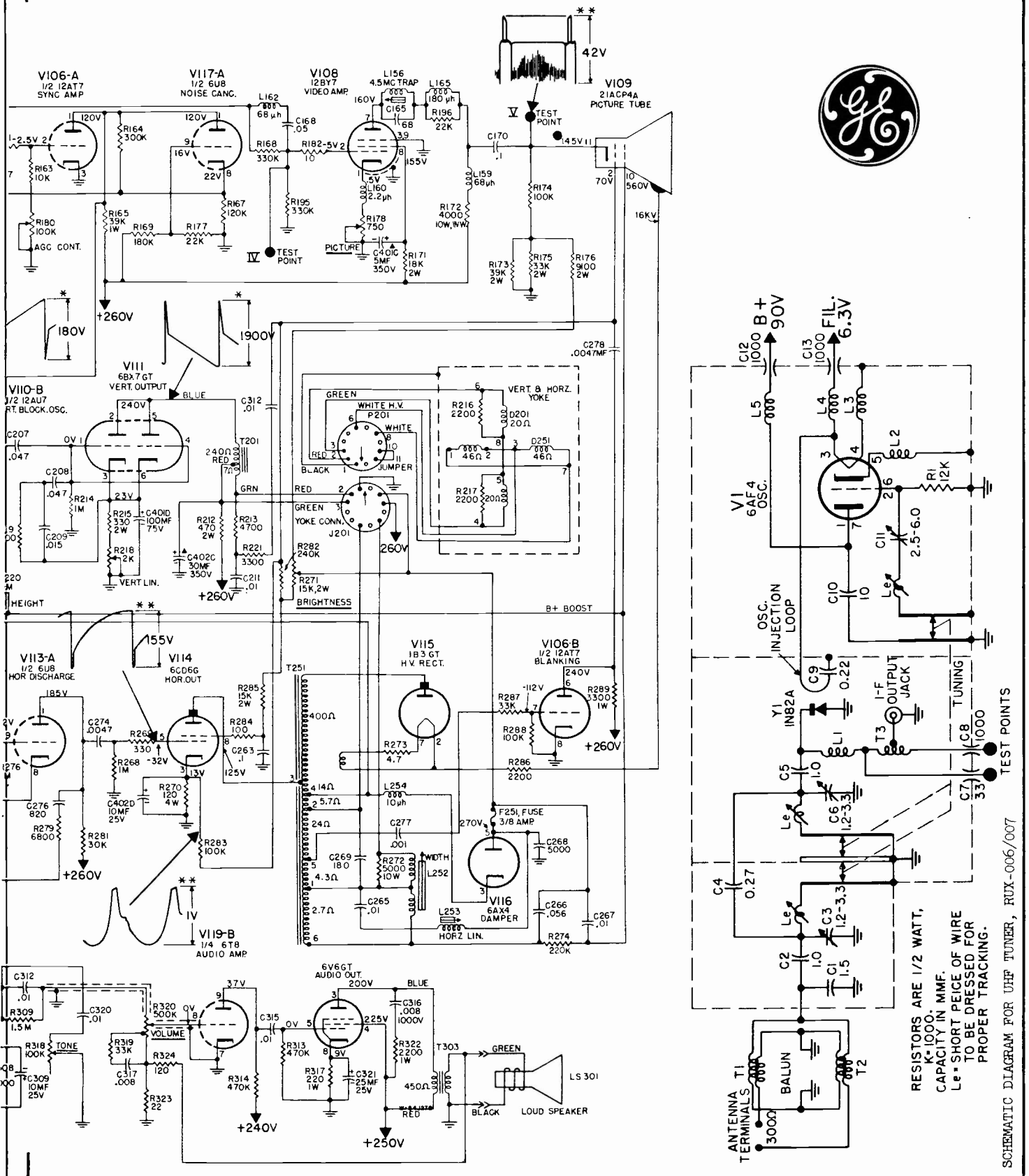

GENERAL ELECTRIC "K" Line, Models 17T14, 17T15, 17T16, 21T17, 21T18

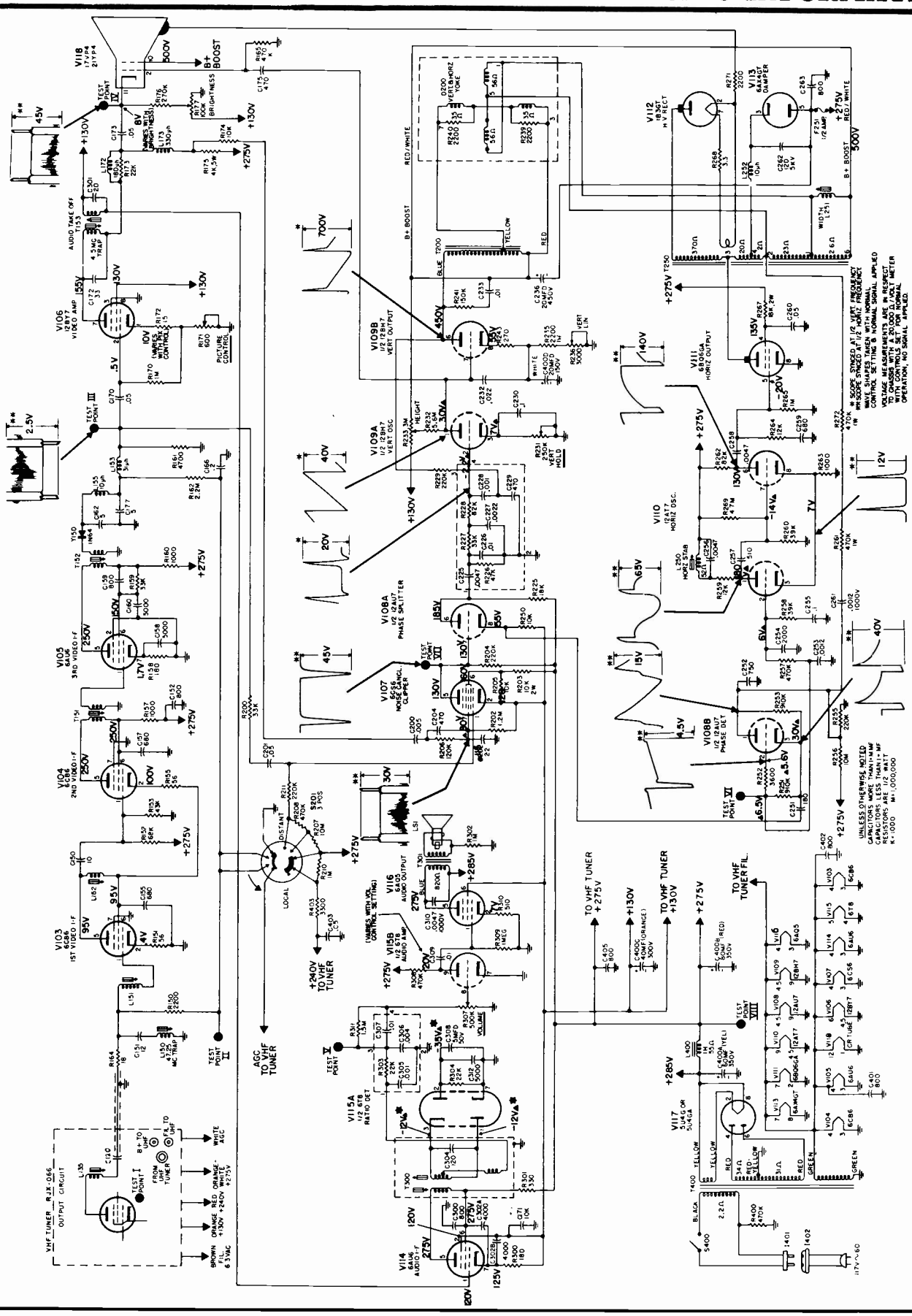

hallicrafters

CHASSIS A1600D
CHASSIS B1600D

*CHASSIS TYPE NUMBER	MODELS CHASSIS MAY BE USED IN
A1600D	17T310W, 17T310M, 17T310B
B1600D	21T320W, 21T320M, 21T320B 21K330M, 21K330B

The A1600D chassis differs from the B1600D circuit primarily in the deflection circuits. A 6CU6 is used for the horizontal output tube, a different vertical output transformer and deflection yoke are employed and a few components change in value. For full details consult horizontal and vertical output stages on the schematics.

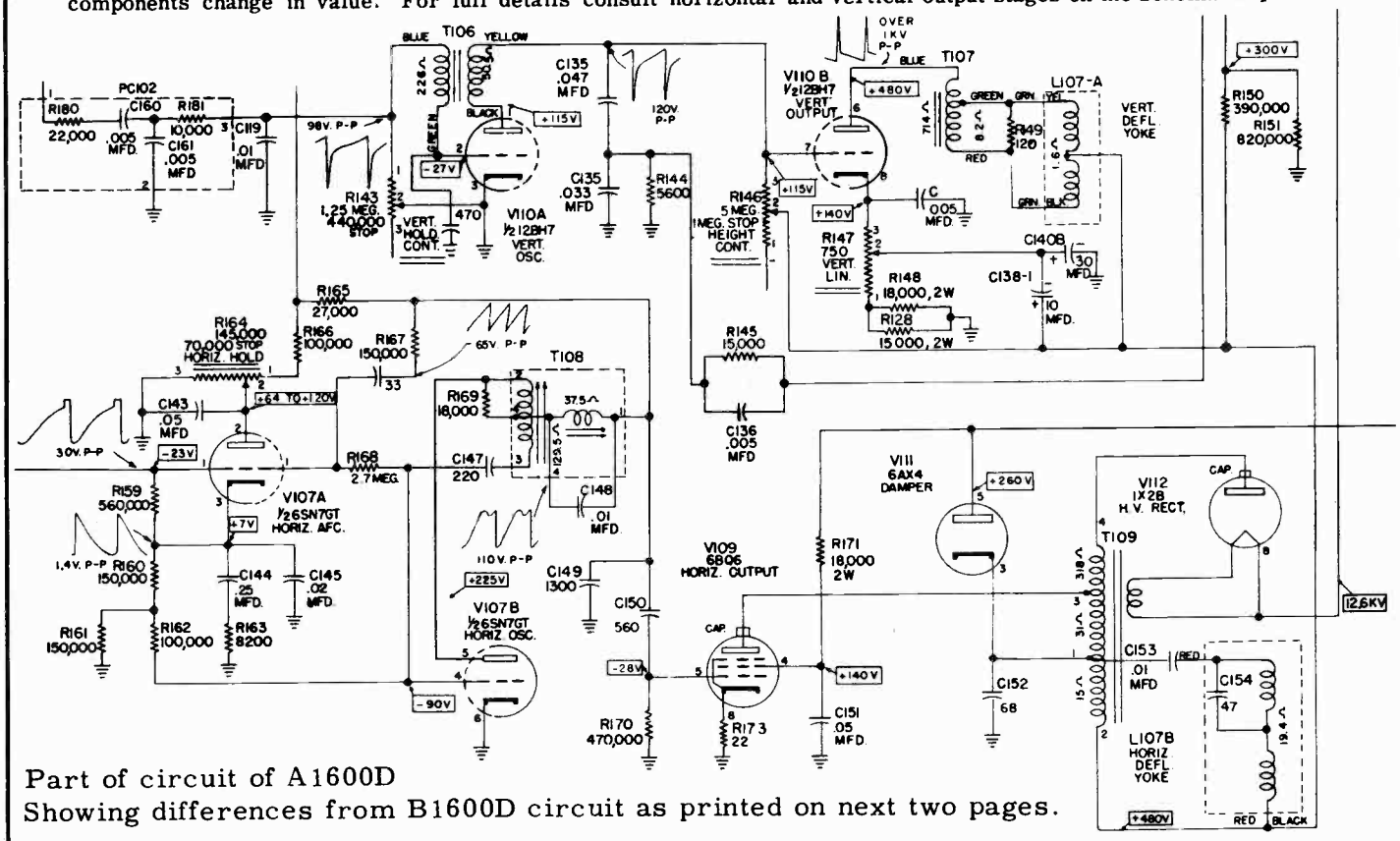

Part of circuit of A1600D
Showing differences from B1600D circuit as printed on next two pages.

REMOVAL OF CHASSIS FROM CABINET

The chassis and chassis board are removable as one unit.

1. Remove the control knobs, the cabinet back, the antenna terminal strip, and the wires from the speaker.
2. Remove the two wood screws on the inside rear corners that hold the chassis board to the wood supports on the bottom of each side.
3. Remove the hex head screws and lockwashers that connect the cabinet to the base board along each side from underneath. Also remove the wood screw (two wood screws on 21" models) from the center front.
4. Lift the cabinet up and off the chassis board.

(Continued on the next three pages.)

HALLICRAFTERS, INC.

VHF 21" CHASSIS B1600D RUN 1

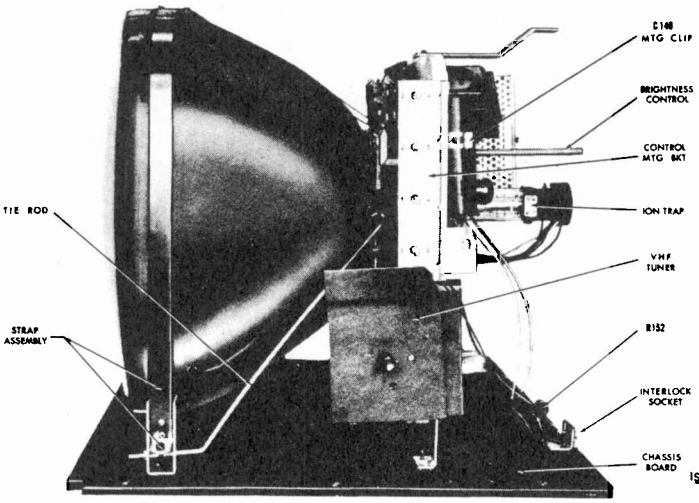

21" Tube Mounting 1600D Chassis

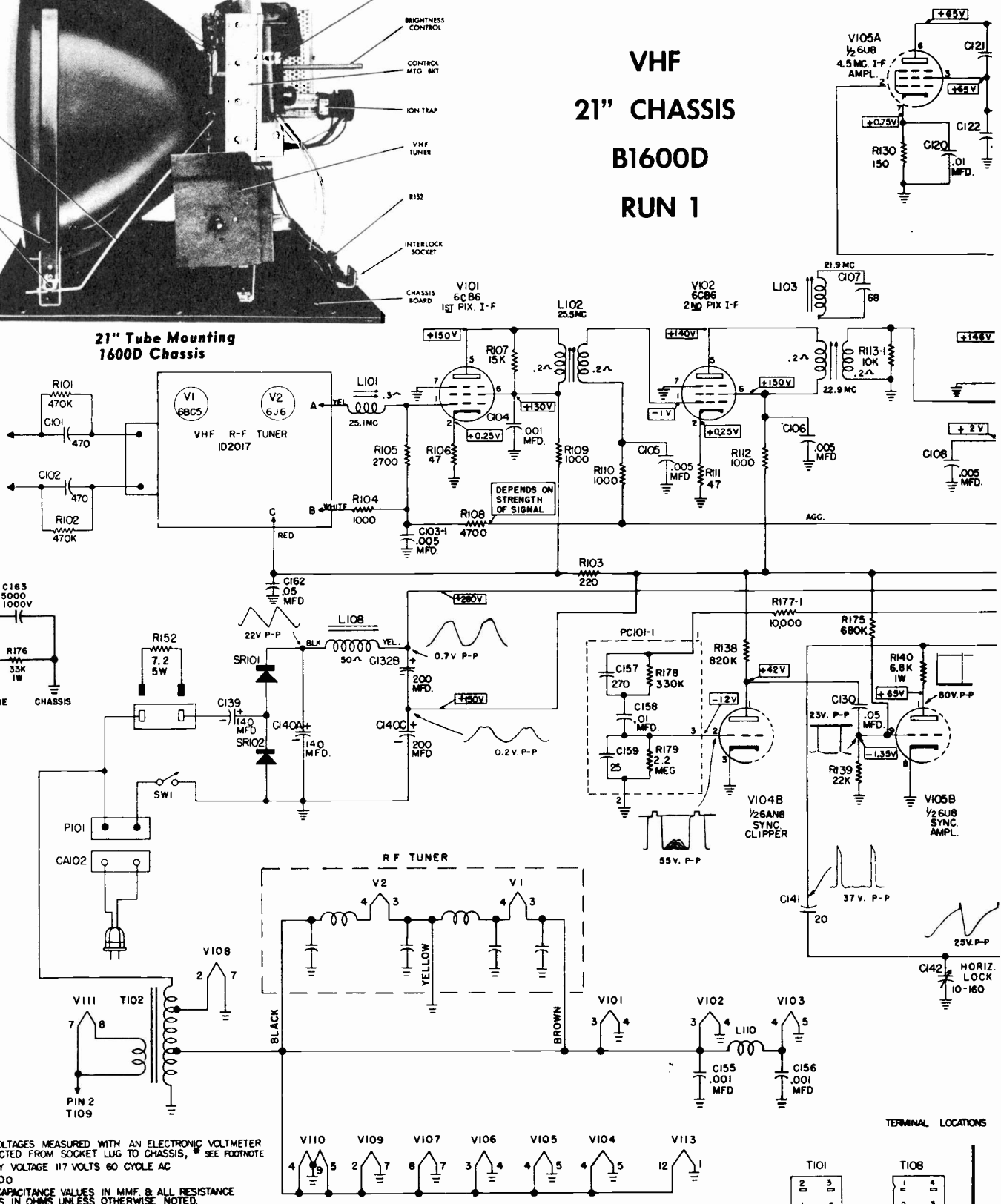

NOTES:

1. ALL VOLTAGES MEASURED WITH AN ELECTRONIC VOLTMETER CONNECTED FROM SOCKET LUG TO CHASSIS, * SEE FOOTNOTE
2. SUPPLY VOLTAGE 117 VOLTS 60 CYCLE AC
3. K = 1000
4. ALL CAPACITANCE VALUES IN MMF. & ALL RESISTANCE VALUES IN OHMS UNLESS OTHERWISE NOTED.

* SOME VOLTAGES ARE VARIABLE, & VOLTAGES SHOWN WERE MEASURED WITH A NORMAL PICTURE ON THE PICTURE TUBE AND THE CONTRAST AND BRIGHTNESS CONTROL SET FOR 50 VOLTS PEAK TO PEAK ON THE CATHODE (PIN 11) OF THE PICTURE TUBE. SOCKET VOLTAGE TOLERANCE ± 10%.

Hallicrafters, Inc. Chassis B1600D

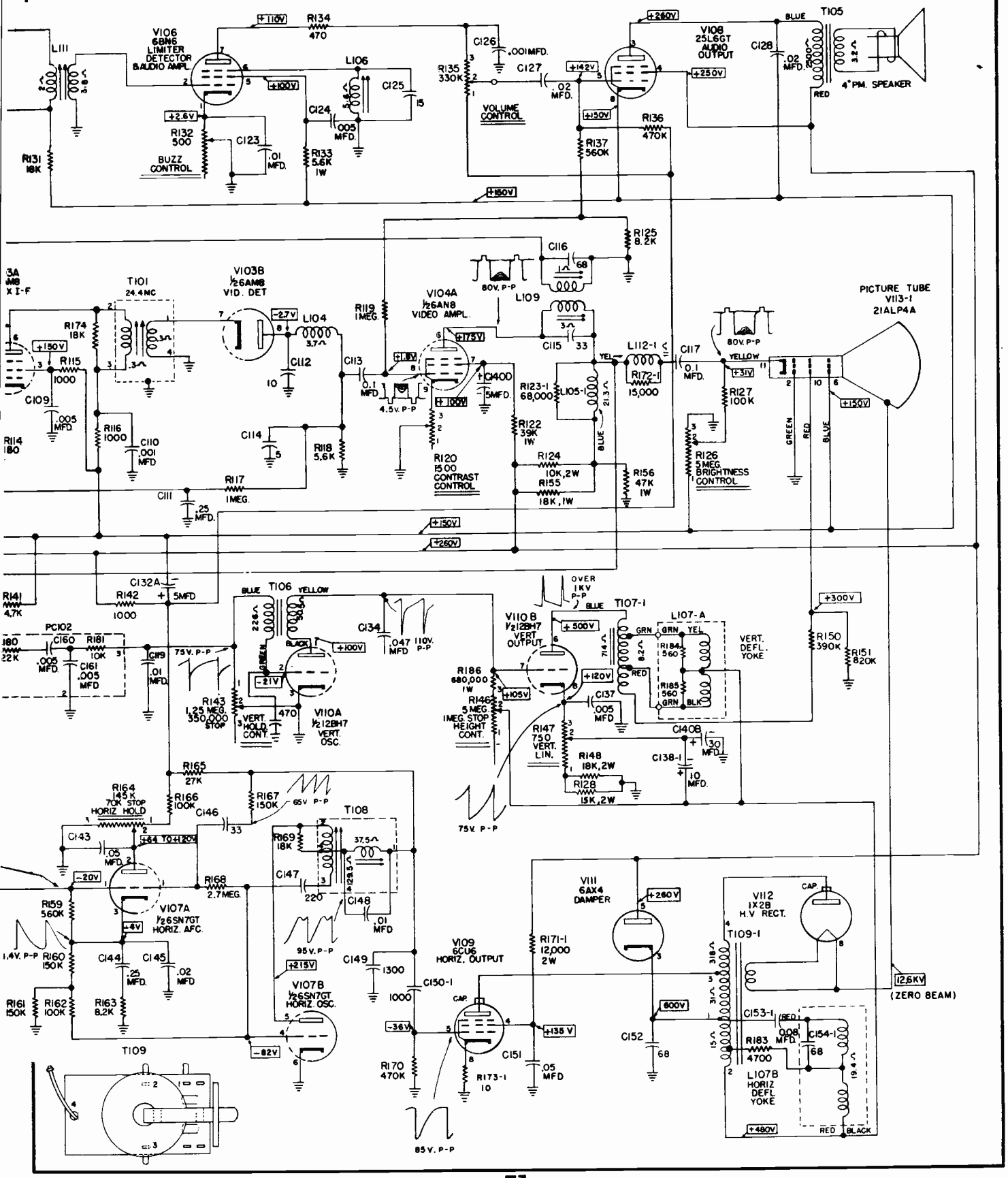

Hallicrafters Inc. Chassis A1600D and B1600D (continued)

LAYOUT OF CHASSIS

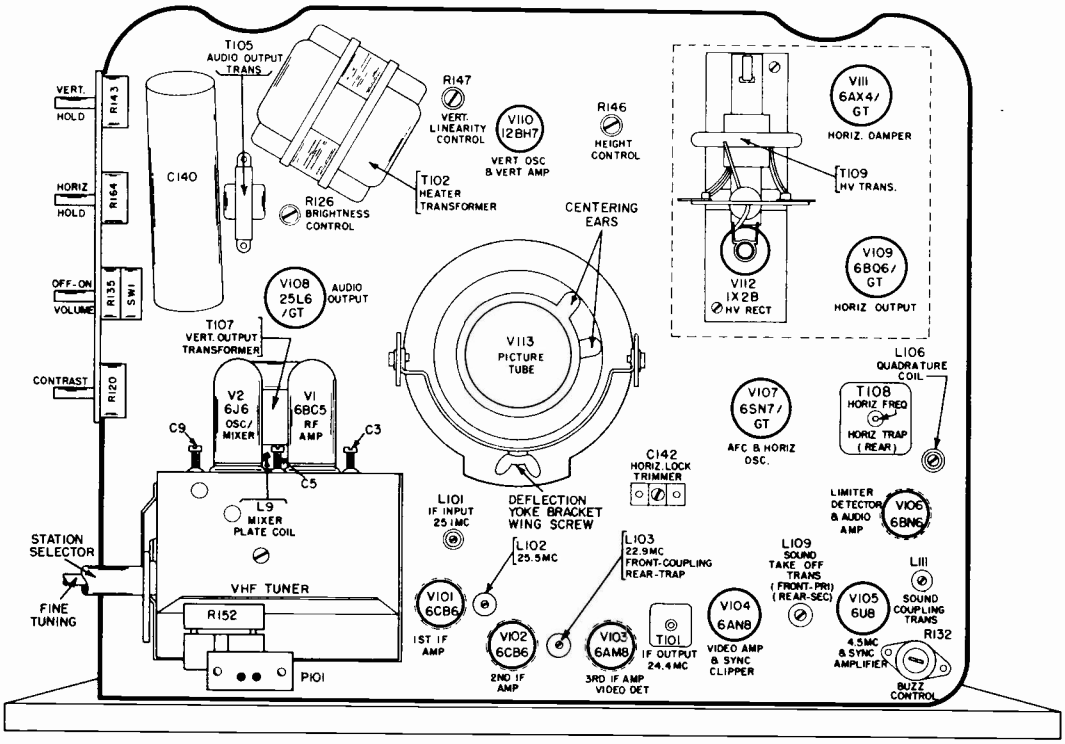

Tube and Alignment Locations 17" 1600D Chassis

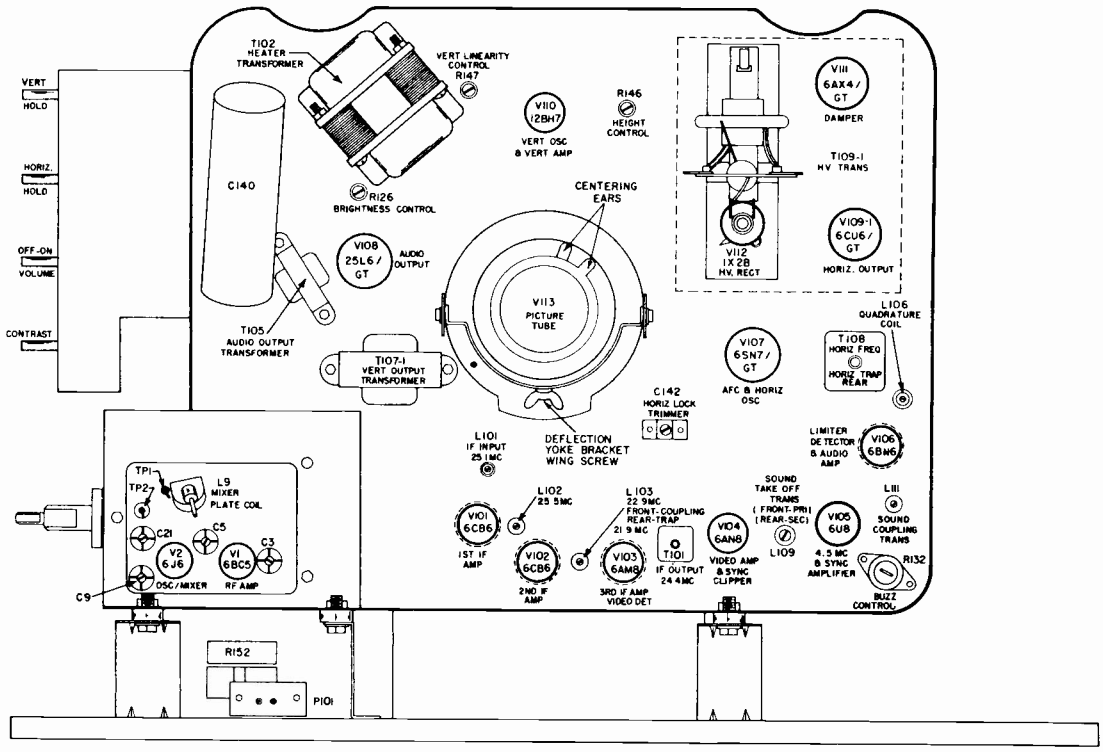

Tube and Alignment Locations 21" 1600D Chassis

Majestic

SERIES 123—17"
SERIES 124—21"
SERIES 124—2—21"

Chassis Series 123, used in Models 78, 78A, 79.
Chassis Series 124, used in Models 81, 82, 83, 84, 85.
Chassis Series 124-2, used in Models 86, 88.

Circuit diagram is printed on the next two pages, over. Alignment information is on the page following the circuit diagram.

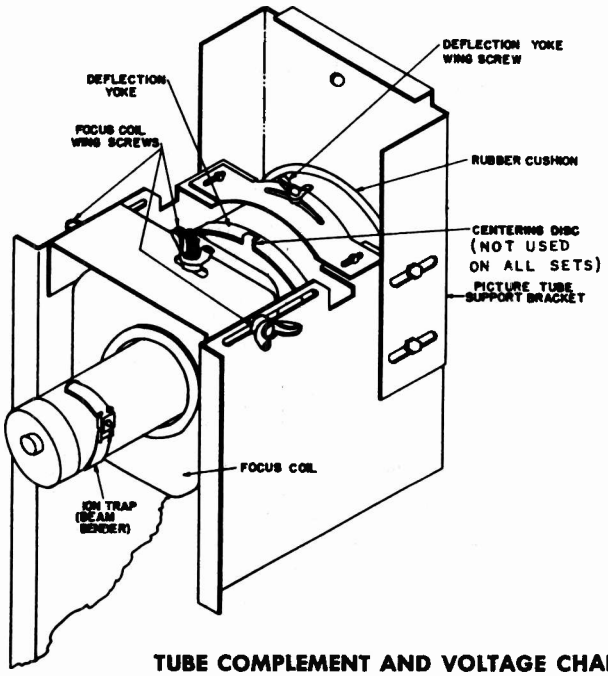

DEFLECTION YOKE ADJUSTMENT

1. Loosen the wing thumb screw located at the top of the deflection yoke frame.
2. Check to see that the deflection yoke mounting bracket rubber cushions press firmly against the flare of the tube.
3. Press the yoke firmly against the flare of the tube.
4. Rotate the yoke until the lines of the raster are horizontal and squared with the picture mask, and tighten the wing screw.

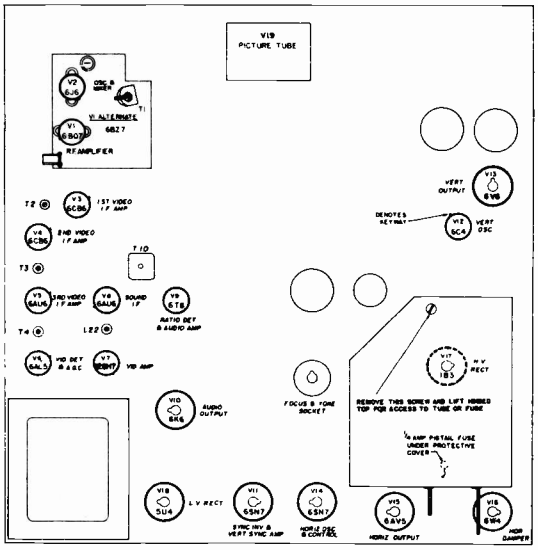

TUBE COMPLEMENT AND VOLTAGE CHART

Symbol	Tube Type	Pin No. 1	Pin No. 2	Pin No. 3	Pin No. 4	Pin No. 5	Pin No. 6	Pin No. 7	Pin No. 8	Pin No. 9
V1	6BQ7	165	–1	0	6.3AC	0	265	160	165	0
V2	6J6	75	135	6.3VAC	0	–3 to –5	–4 to –9	0	–	–
V3	6CB6	–1	.55	0	6.3AC	100	100	0	–	–
V4	6CB6	–1	.55	0	6.3AC	101	101	0	–	–
V5	6AU6	0	0	0	6.3AC	102	102	1	–	–
V6	6AL5	0	–.75	6.3AC	0	0	0	–.35	–	–
V7	12BH7	152	0	0	6.3AC	6.3AC	57	–.35	0	–
V8	6AU6	0	0	0	6.3AC	105	105	.9	–	–
V9	6T8	–.35	–1.7	–.35	6.3AC	0	0	0	–.35	40
V10	6K6	NC	0	210	219	0	N.C.	6.3AC	14	–
V11	6SN7	0	28	2.4	28	74	28	6.3AC	0	–
V12	6C4	144	0	0	6.3AC	144	–34	0	–	–
V13	6V6	NC	6.3AC	275	275	–24	–	0	5	–
V14	6SN7	–3.5	175	12	–65	188	0	0	6.3AC	
V15	6AV5	–25	6.3AC	0	–	Do Not Measure	–	0	145	
V16	6W4	NC	NC	470	–	225	–	290	290† 6.3AC†	
V17	1B3	13.5KV*	13.5KV*	13.5KV*	–	13.5KV*	–	13.5KV*	13.5KV*	
V18	5U4	NC	310** 5.0AC	NC	305AC	290	305AC	290	310	
V19	CRT	0	5	Pin 10 365		Pin 11 33		Pin 12 6.3AC		

NOTES FOR VOLTAGE CHART

1. Tune receiver to unused chan. — no signal applied.
2. All front panel controls at maximum clockwise position.
3. Screwdriver service adjustments — adjusted for normal raster.
4. Maintain line voltage at 117 volts A.C.
5. All voltage measured with V.T.V.M. unless otherwise specified.
6. Values shown are D.C. voltages measured from socket to ground unless otherwise specified.
7. N.C. designates no connection.
8. A dash designates the non existence of socket connections.
9. "Local distance" switch in "local" position.

* Use high voltage insulated probe only.
† Top value is D.C. voltage to ground. Bottom value connect A.C. meter across socket connections 7 and 8.
** Top value is D.C. voltage to ground. Bottom value connect A.C. meter across socket connections 2 and 8.

Majestic

Series 123, 124, 124-2

THIS SCHEMATIC DIAGRAM FOR USE WITH ALL CHASSIS STAMPED IN REAR UPPER RIGHT HAND CORNER SERIES 123, 124, 124-2

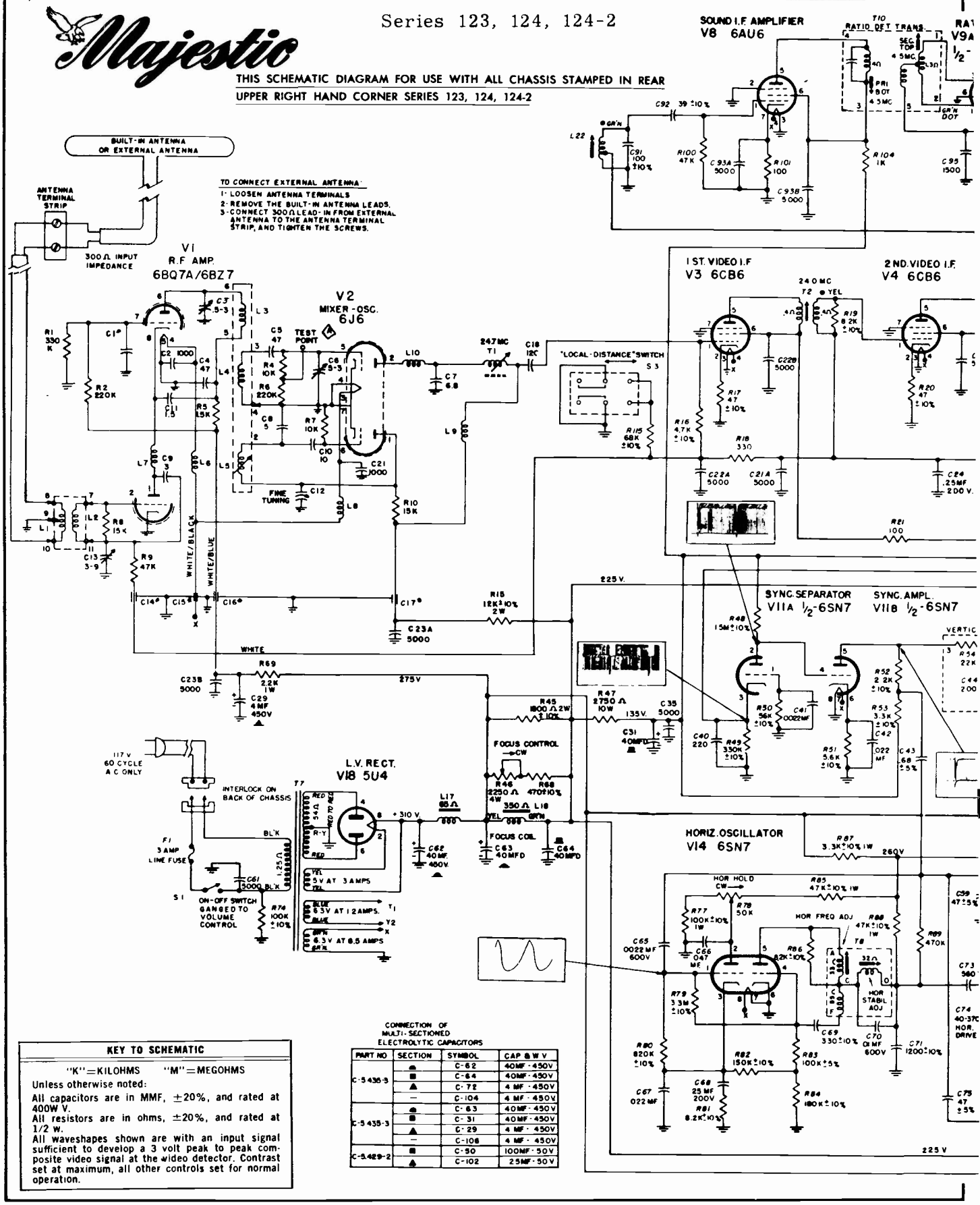

KEY TO SCHEMATIC

"K" = KILOHMS "M" = MEGOHMS

Unless otherwise noted:

All capacitors are in MMF, ±20%, and rated at 400W V.

All resistors are in ohms, ±20%, and rated at 1/2 w.

All waveshapes shown are with an input signal sufficient to develop a 3 volt peak to peak composite video signal at the video detector. Contrast set at maximum, all other controls set for normal operation.

CONNECTION OF MULTI-SECTIONED ELECTROLYTIC CAPACITORS

PART NO	SECTION	SYMBOL	CAP & W V
C-5436-3	●	C-62	40MF-450V
	■	C-64	40MF-450V
	▲	C-72	4 MF-450V
	—	C-104	4 MF-450V
C-5435-3	●	C-63	40MF-450V
	■	C-31	40MF-450V
	▲	C-29	4 MF-450V
	—	C-106	4 MF-450V
C-5429-2	■	C-50	100MF-50V
	▲	C-102	25MF-50V

MOST-OFTEN-NEEDED 1955 TELEVISION SERVICING INFORMATION

Majestic Series 123, 124, 124-2

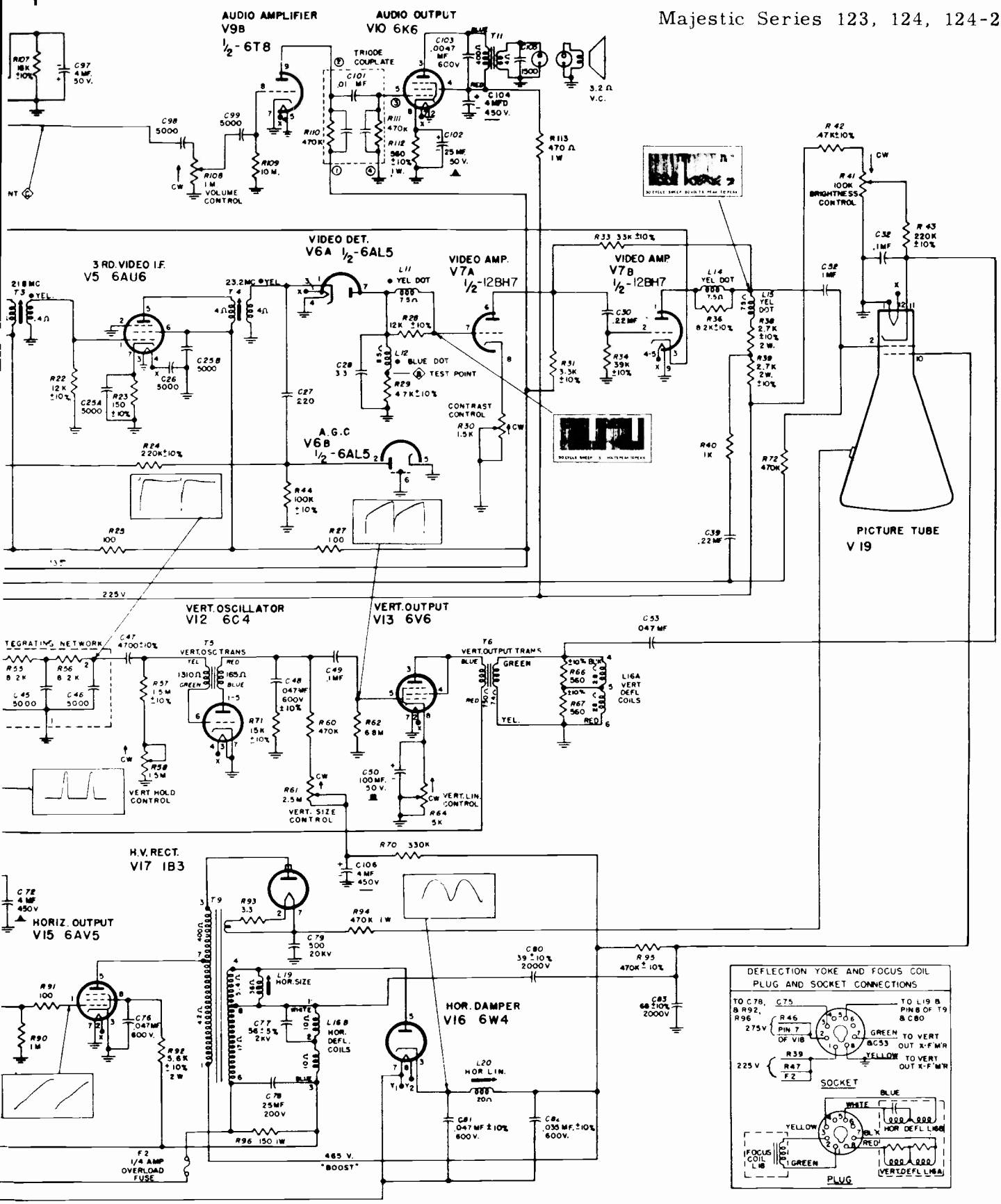

Majestic Series 123, 124, 124-2

Alignment Instructions

TV I-F ALIGNMENT

1. Tune receiver to quiet portion of TV High Band.
2. Set contrast control fully counterclockwise.
3. Apply 3 v. negative bias between the A.G.C. bus (at C22A) and ground. (Use 2—1½ v. cells.)
4. Connect TV I-F Signal Generator through a 1500 MMF condenser to Test Point (A) of tuner unit; low side to ground. (See schematic diagram.)
5. Connect negative lead of V.T.V.M. (or meter of 20,000 ohms-per-volt, or better) to 4.7K diode load resistor TEST POINT (B); positive lead to ground. (See schematic diagram.)
6. Feed 23.2 MC [23.3]* (±.05 MC) from Signal Generator, and adjust T4 for maximum deflection on meter. Maintain Signal Generator output so low that meter reads no more than 1.5 volts at peak.
7. Feed 21.8 MC [21.8]* (±.05 MC) from Signal Generator, and adjust T3 as above.
8. Feed 24.0 MC [23.9]* (±.05 MC) from Signal Generator, and adjust T2 as above.
9. Feed 24.7 MC [24.5]* (±.05 MC) from Signal Generator, and adjust T1 as above.
10. Replace the meter with the vertical input of an Oscilloscope through a 10K isolating resistor, low side to ground.
11. Remove Signal Generator. Feed a video I-F Sweep Generator (20 to 28MC) through loosely coupled shield of 6J6 converter tube, making sure shield is not grounded. (Refer to Fig. 3.)
12. Loosely couple high side of a TV I-F Marker Generator to the high Sweep Generator Lead; low side to ground.
13. Feed I-F Sweep, and observe response on 'scope. (See Fig. 5.) Use marker frequencies 20.25, 21.75 and 24.75 MC.
14. If response does not approximate that shown in Fig. 5, repeat steps 4 to 9, making sure that frequencies are precise, and that the Signal Generator ouput voltage is kept low. Continue with steps 10 to 13. A slight touch-up of individual slugs may be required to approximate the recommended curve of Fig. 5.

*NOTE: If 3v fixed bias is unavailable and zero fixed bias is used, set signal generator at [ ] bracketed frequencies values.

IMPORTANT: Keep the sweep generator and marker generator outputs at minimum to avoid curve distortion. Marker pips should be kept barely visible.

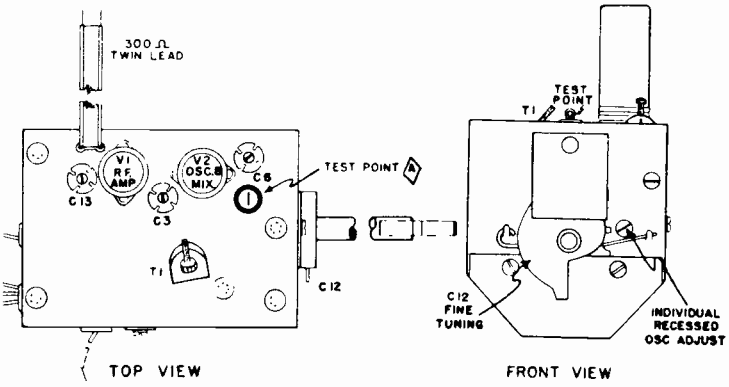

TV SOUND ALIGNMENT

1. Connect a 4.5 MC Signal Generator (±.01 MC) through a 1500 MMF condenser to the grid, Pin 7 of V7, 12BH7; low side to ground. See schematic diagram.
2. Obtain two resistors of approximately 100,000 ohms each, whose resistances have been matched accurately with an ohmmeter. Connect them in series across the 18K resistor (R107) at the 6T8 tube socket (V9A).
3. Connect negative lead of V.T.V.M. to junction of matched resistors of step 2; positive lead to ground.
4. Feed 4.5 MC (±.01 MC) from signal generator, and adjust L22, sound take-off coil, for maximum deflection on V.T.V.M.
5. Adjust the bottom slug of T10 for maximum deflection on V.T.V.M.
6. Connect positive lead of V.T.V.M. to junction of C98, and R106 TEST POINT (C), leaving negative lead of V.T.V.M. connected as in step 3. See schematic diagram.
7. Adjust top slug of T10 for zero output on V.T.V.M. between two opposite polarity peaks.

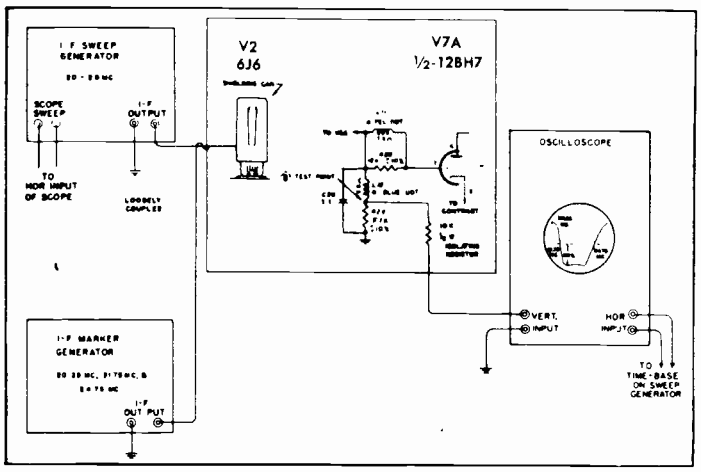

FIG. 3. IF ALIGNMENT BLOCK DIAGRAM

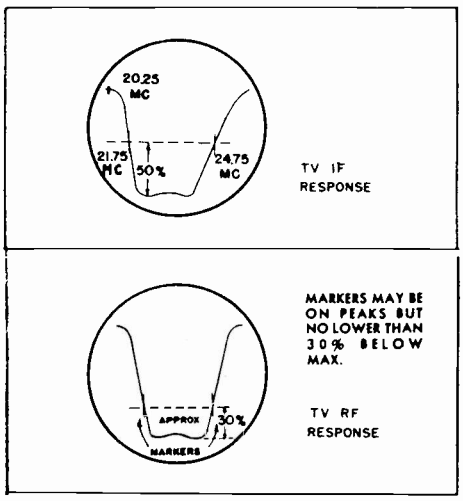

FIG. 5. RECOMMENDED RESPONSE CURVES.

MONTGOMERY WARD

TELEVISION RECEIVERS

MODELS
WG-3071E&F
WG-3073E&F
WG-3075D&E
WG-3077D&E
WG-3079D&E

PRODUCTION CHANGES

There are two different ratio detector transformers (T-7) used in these receivers, Part Numbers 9A2269 and 9A2295. The T-7 circuit shown in this schematic diagram covers the 9A2269 ratio detector. Receivers using the 9A2295 ratio detector can be identified by the following changes:

C-18 becomes 47X570 330 mmf molded mica condenser

R-15 becomes B84333 33K ohms 0.5 W carbon resistor

R-18, R-19 become B83103 10K ohm 0.5 W carbon resistors

In addition, the 9A2295 ratio detector has terminals with numerical identification (1, 2, 3 etc.) whereas the 9A2269 ratio detector has terminals with alphabetical identification (A, B, C etc.)

Circuit diagram printed below and on page 78. This division is made to simplify printing and is not an actual physical separation.

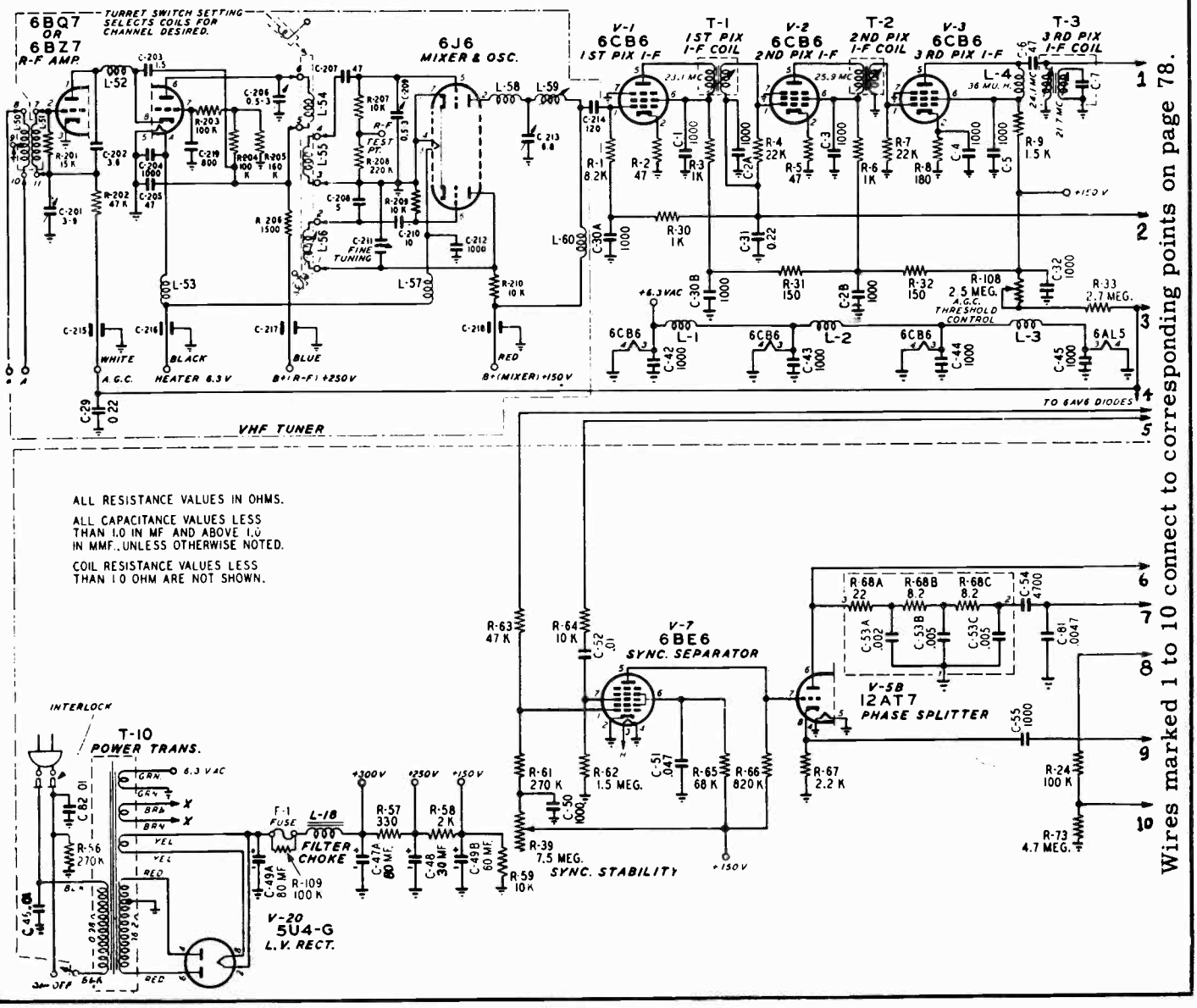

MONTGOMERY WARD & CO.
(Continued)

Models 35WG-3071E & F, and 35WG-3073E & F are identical to models 35WG-3071D & 3073D except for the following changes.

1. The 21" glass rectangular picture tube (21FP4A) has been replaced with a 21" metal rectangular picture tube (21MP4).
2. Change in values of a few resistors were made in addition to the picture tube change.

Models WG-3075D & E, WG-3077D & E and WG-3079D & E are identical to models 25WG-3075C, 25WG-3077C and 25WG-3079C except for the following changes:

1. Beginning with the issue "D" receivers, V-18 6W4-GT damper tube was replaced with a 6AX4-GT damper tube.
2. Slight changes in cabinet construction and design were also made on the issue "D" and issue "E" models. This change affects pix crystals, masks, etc.

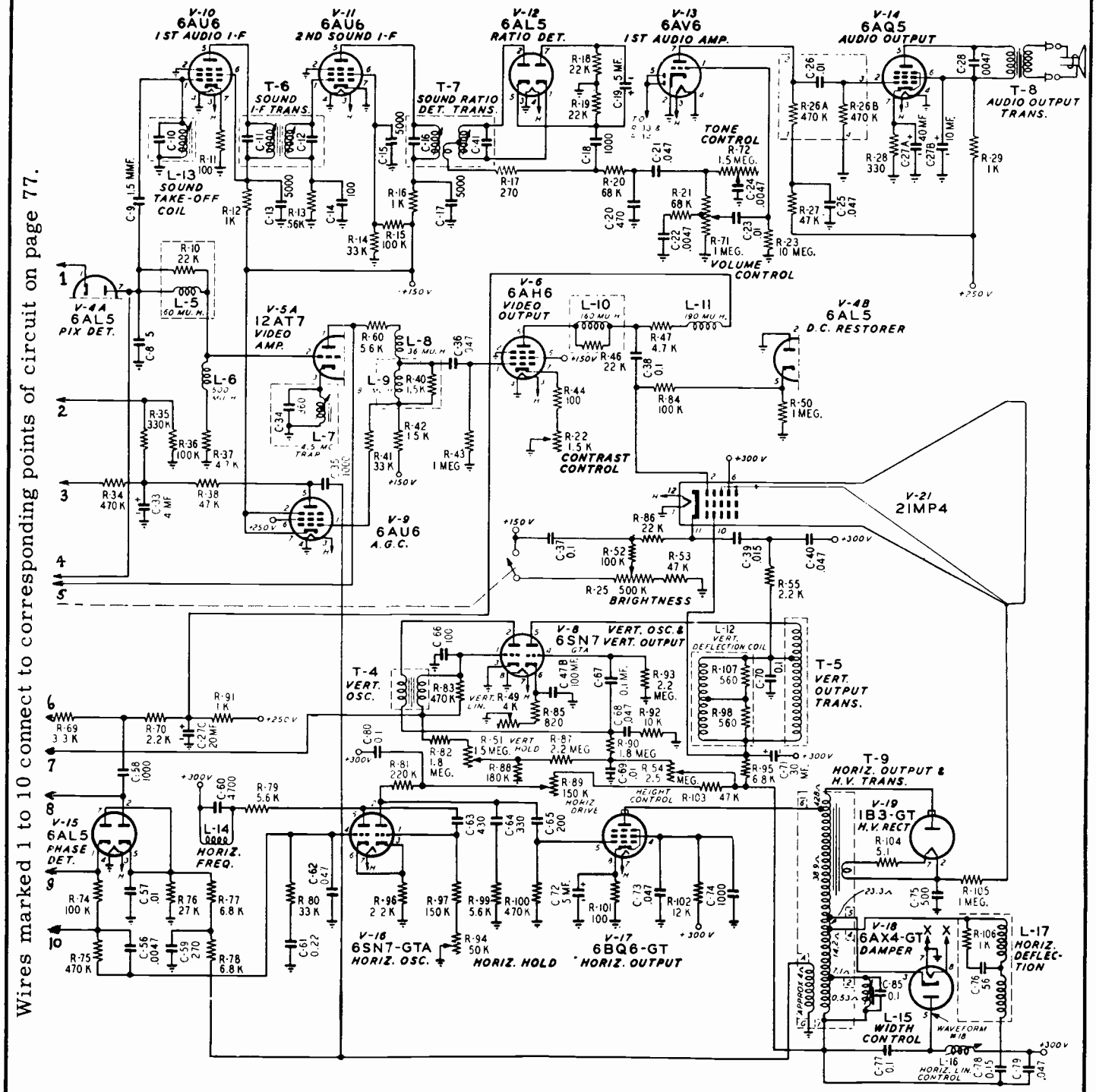

Motorola TV

CHASSIS
TS-525
TS-528
TS-603
SERIES

RECEIVER MODEL BREAKDOWN CHART

Model	Description	TV Chassis
21C3	Table, red-brn mahogany: masonite; with detachable console-height legs	TS-528
Y21C3	Table, red-brn mahogany: masonite; with detachable console-height legs	TS-528Y
21C3B	Table, limed oak: masonite; with detachable console-height legs	TS-528
Y21C3B	Table, limed oak: masonite; with detachable console-height legs	TS-528Y
21K20	Console, red-brn mahogany: masonite	WTS-525
Y21K20	Console, red-brn mahogany: masonite	WTS-525Y
21K20B	Console, limed oak: masonite	WTS-525
Y21K20B	Console, limed oak: masonite	WTS-525Y
21K21	Console, red-brn mahogany: masonite	TS-528
Y21K21	Console, red-brn mahogany: masonite	TS-528Y
21K21B	Console, limed oak: masonite	TS-528
Y21K21B	Console, limed oak: masonite	TS-528Y
21K22	Console, white birch: wood; with wrought iron stand	TS-528
Y21K22	Console, white birch: wood; with wrought iron stand	TS-528Y
21K23	Console, red-brn mahogany: masonite; with turntable mounted on wooden legs	TS-528
Y21K23	Console, red-brn mahogany: masonite; with turntable mounted on wooden legs	TS-528Y
21K23B	Console, limed oak: masonite; with turntable mounted on wooden legs	TS-528
Y21K23B	Console, limed oak: masonite; with turntable mounted on wooden legs	TS-528Y
21K24	Console, white birch: wood; with lift door	TS-528
Y21K24	Console, white birch: wood; with lift door	TS-528Y
21T18	Table, red-brn mahogany: masonite	RTS-525
Y21T18	Table, red-brn mahogany: masonite	RTS-525Y
21T18B	Table, limed oak: masonite	RTS-525
Y21T18B	Table, limed oak: masonite	RTS-525Y
21T19	Table, red-brn mahogany: masonite	TS-528
Y21T19	Table, red-brn mahogany: masonite	TS-528Y
21T19B	Table, limed oak: masonite	TS-528
Y21T19B	Table, limed oak: masonite	TS-528Y
24K4	Console, red-brn mahogany: masonite	TS-603
Y24K4	Console, red-brn mahogany: masonite	TS-603Y
24K4B	Console, limed oak: masonite	TS-603
Y24K4B	Console, limed oak: masonite	TS-603Y
24K5	Console, red-brn mahogany: masonite	TS-603
Y24K5	Console, red-brn mahogany: masonite	TS-603Y
24K5B	Console, limed oak: masonite	TS-603
Y24K5B	Console, limed oak: masonite	TS-603Y

CHASSIS BREAKDOWN CHART

Chassis	Picture Tube	VHF Tuner	UHF Tuner	UHF Conversion Kit
RTS-525	21YP4A	TT-70Y		WTK-35
RTS-525Y	21YP4A	TT-70Y	WTT-37	
WTS-525	21YP4A	TT-70		WTK-35
WTS-525Y	21YP4A	TT-70Y	WTT-37	
TS-528	21ALP4A	TT-70		WTK-35
TS-528Y	21ALP4A	TT-70Y	WTT-37	
TS-603	24DP4A	TT-70		WTK-35
TS-603Y	24DP4A	TT-70Y	WTT-37	

NOTE: For UHF Tuner Service Information refer to separate UHF tuner service manual.

CHASSIS DESCRIPTION

RTS-525 18 circuit tubes, a 21YP4A rectangular 21" aluminized picture tube (70° deflection angle) plus a germanium diode detector and selenium rectifiers. A single chassis contains the picture, sound, and scanning circuits plus the filament and "B" supply.

A switch type VHF tuner incorporating a cascode type amplifier is used. Chassis with a "Y" suffix have, in addition, a built-in continuous tuning UHF tuner.

The IF strip consists of three stagger-tuned, transformer coupled, stages while the sound system uses a ratio detector and limiter driven by one stage of IF amplification.

The video circuit uses direct coupling and provides full DC restoration. A keyed, delayed AGC circuit is used.

The heater voltage, for all tubes except the high voltage rectifier, is supplied by a filament transformer. The selenium rectifiers, operating as full-wave doublers, supply the low voltage "B" supplies.

WTS-525 Same as RTS-525 except picture tube is mounted with a 5 degree tilt.

TS-528 Same as RTS-525 except for 21ALP4A, a 21" aluminized rectangular (90° deflection angle) picture tube. The vertical and horizontal output and damping diode tubes are also different types. An external horizontal centering control has been added to rear panel.

TS-603 Same as TS-528 except for 24DP4A, a 24" aluminized rectangular (90° deflection angle) picture tube.

(Continued on the next five pages)

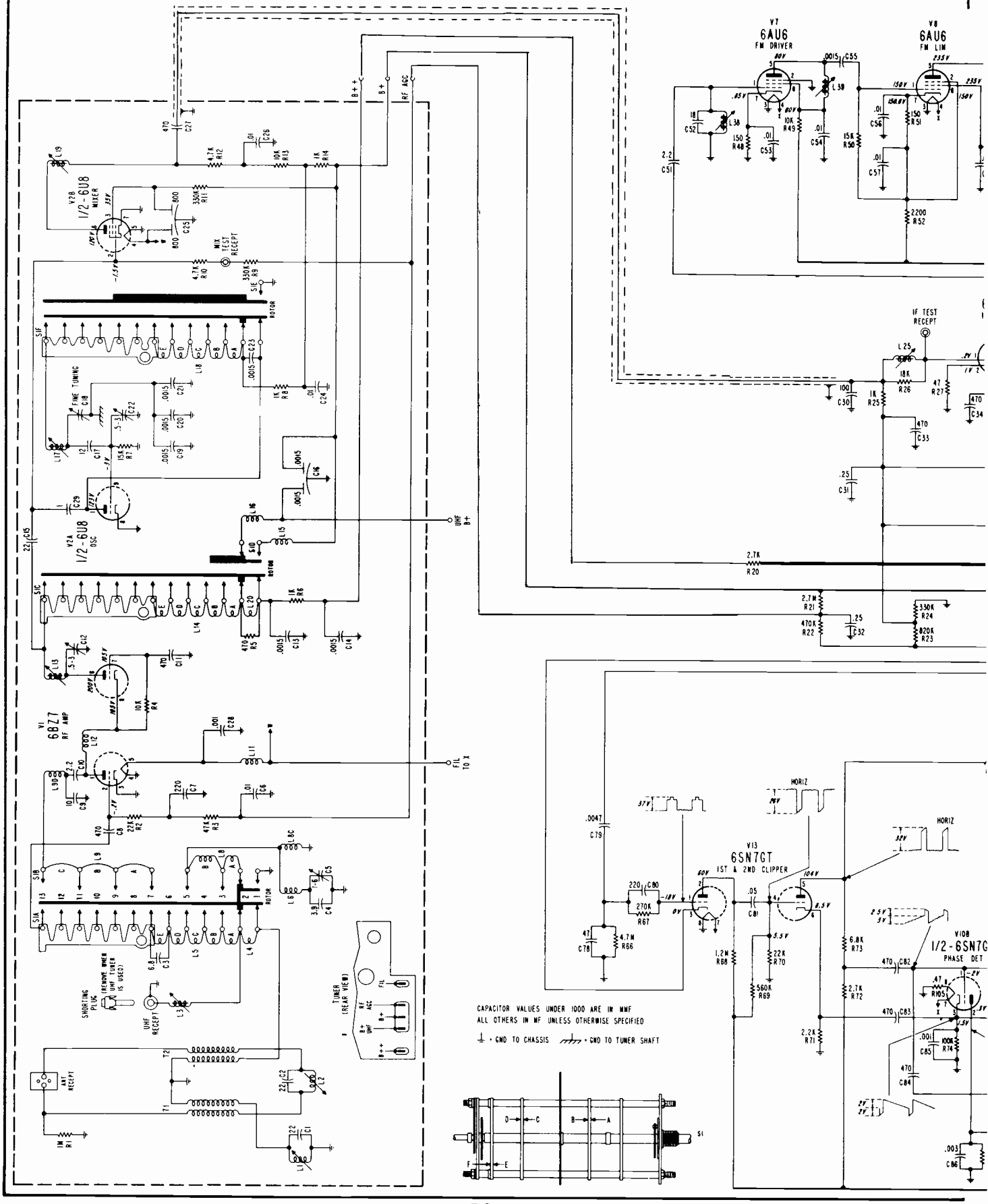
V7
6AU6
FM DRIVER
V8
6AU6
FM LIM
V2B
1/2-6U8
MIXER
V2A
1/2-6U8
OSC
V1
6BZ7
RF AMP
V13
6SN7GT
1ST & 2ND CLIPPER
V10B
1/2-6SN7G
PHASE DET
IF TEST RECEPT
MIX TEST RECEPT
FINE TUNING
ROTOR
UHF B+
FIL TO X
RF AGC
B+
B++
HORIZ
SHORTING PLUG
(REMOVE WHEN UHF TUNER IS USED)
UHF RECEPT
ANT RECEPT
TUNER (REAR VIEW)
CAPACITOR VALUES UNDER 1000 ARE IN MMF
ALL OTHERS IN MF UNLESS OTHERWISE SPECIFIED
= GND TO CHASSIS
= GND TO TUNER SHAFT

MOST-OFTEN-NEEDED 1955 TELEVISION SERVICING INFORMATION

TELEVISION CHASSIS TS-525A-00

MOTOROLA, INC.

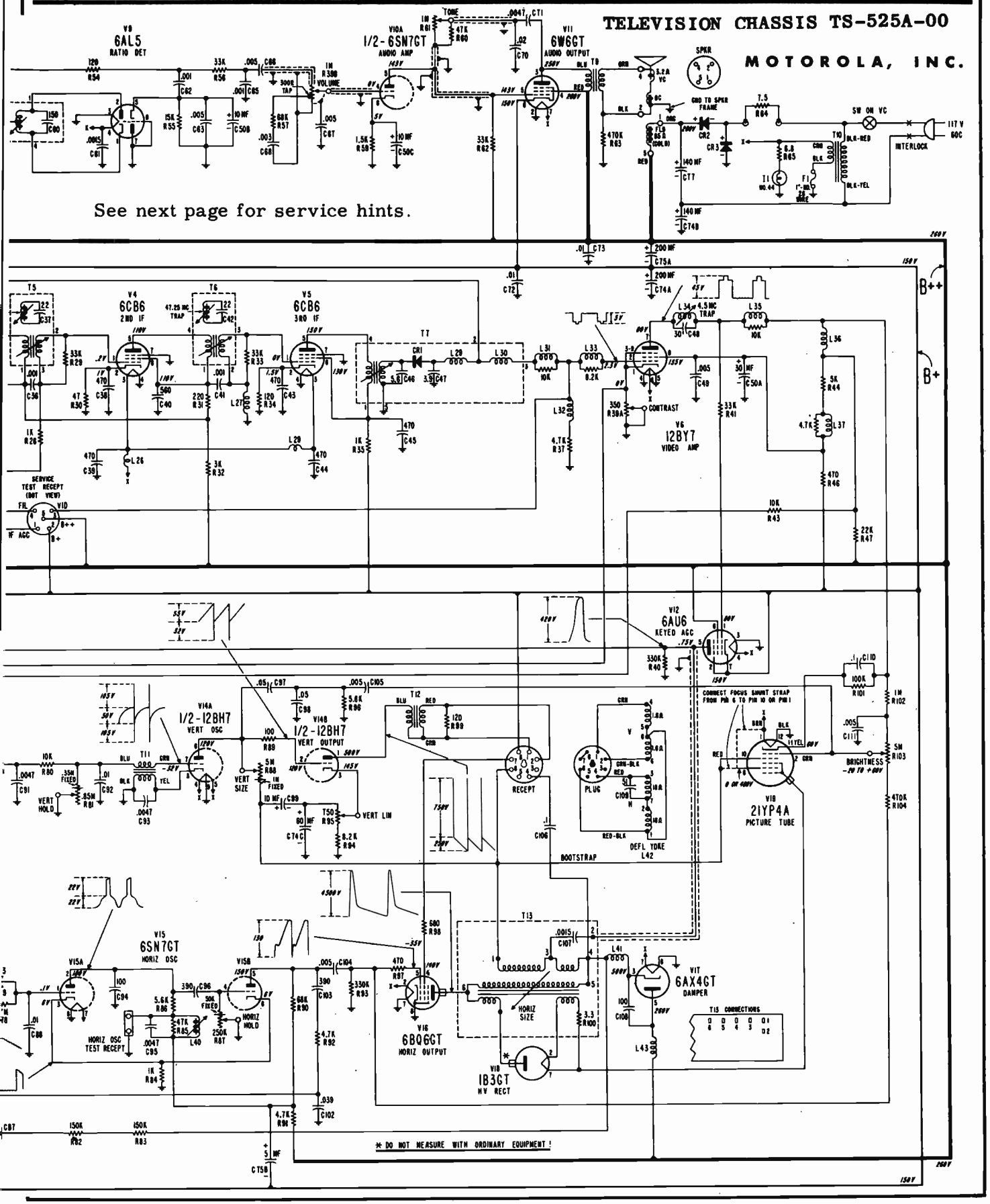

Alignment Information for Motorola TS-525, TS-528, and TS-603 Series

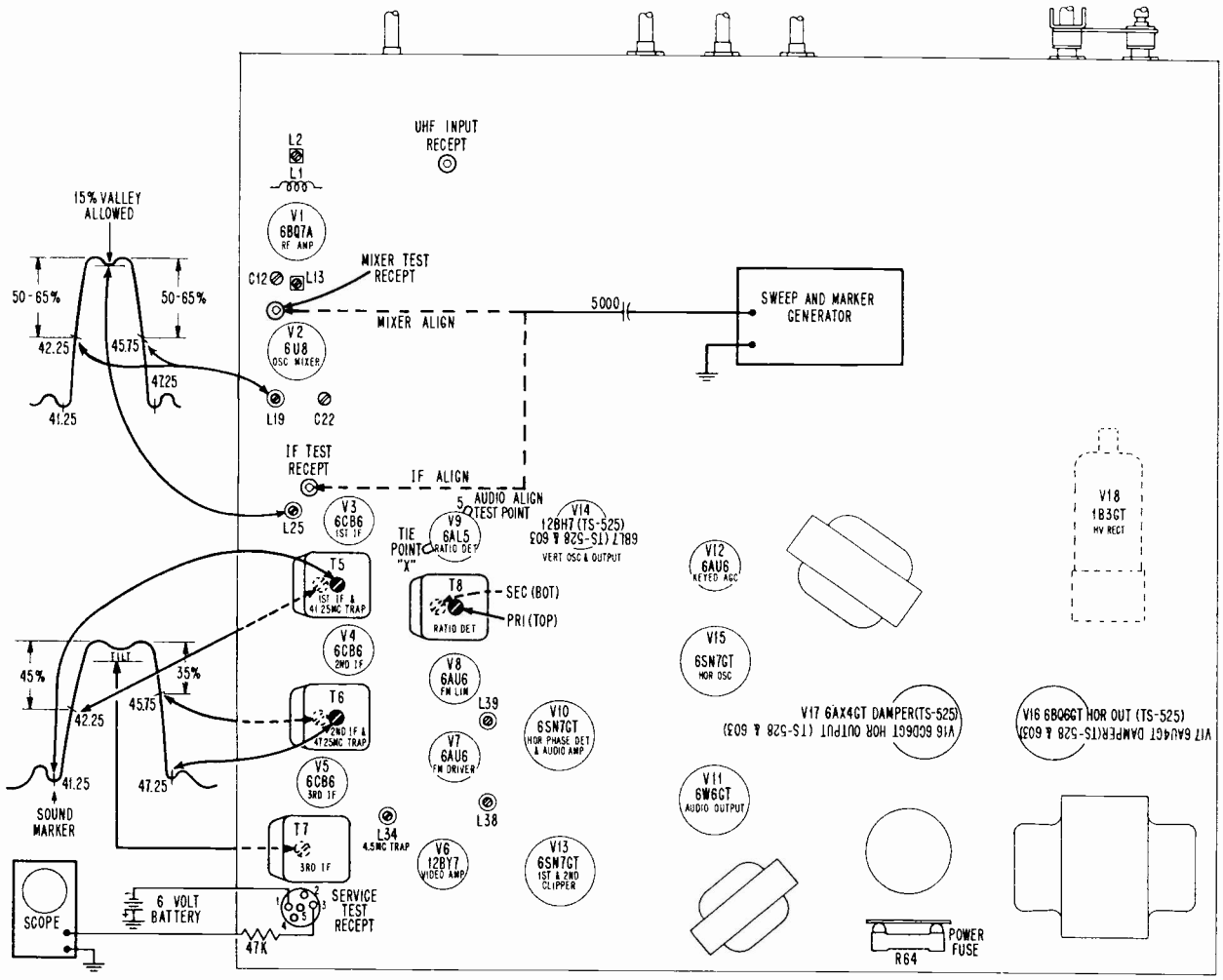

FIGURE 8. TUBE LOCATIONS & IF ALIGNMENT DETAIL

IF AND MIXER ALIGNMENT

1. Remove horizontal output tube (V-16) to eliminate RF interference. Connect a 2500 ohm 10 watt resistor from chassis ground to B++ (250V bus) to normalize voltages.

2. Remove antenna and make following connections: (See Figure 8).

a. Connect a 6 volt battery between pin 1 (IF AGC bus) of service test receptacle and ground. Positive side of battery goes to ground.

b. Disable tuner oscillator by grounding pin 9 of V-2 (6U8) and turn channel selector to channel 13.

c. Connect sweep generator to IF test receptacle and oscilloscope to detector load resistor (pin 3 of service test receptacle).

3. Center sweep frequency at 44 Mc with a sweep width of 10 Mc and adjust generator output below point of receiver limiting (approximately 3 volts peak-to-peak at detector load).

4.

Adjust	At Marker Freq.	For
T-5 top	41.25 Mc	Minimum, See Figure 8
T-6 top	47.25 Mc	Minimum, See Figure 8
T-5 bot	42.25 Mc	Marker at proper point, See Figure 8
T-6 bot	45.75 Mc	Marker at proper point, See Figure 8
T-7 bot	top of curve	Flat top, See Figure 8

As some adjustments interact, repeat as necessary to obtain proper curve.

5. Move generator to mixer test receptacle and short across R-10 (4.7K ohms). See Figure 9 for R-10 location.

L-19 & L-25	42.25 - 45.75 Mc	Proper curve, See Figure 8. If desired overall response cannot be obtained, check dressing of bypass capacitors, especially the screen bypassing of the 1st & 2nd IF tubes. These lead lengths are critical and should be kept short and dressed to obtain proper response.

MOTOROLA TS-525, TS-528, TS-603, Alignment and Service Data, Continued

CHECKS

Bandwidth may be determined by noting the frequencies at which the markers fall at the 50% points. Mixer and IF bandwidth over 3.7 Mc may cause sound bars or burble in the picture; if less than 3 Mc, a loss of resolution or fine detail in the picture may be noticed.

6. Decrease generator signal until there is a marked decrease in the oscilloscope waveform. Unwanted regeneration will be indicated by sharp peaks on the overall response curve. If regeneration is present, check IF cathode resistors, screen bypass capacitors, and lead dress. Improper alignment may also cause regeneration.

AUDIO ALIGNMENT

This alignment may be made by injecting an accurate 4.5 Mc signal in at the video amplifier grid. However, the station alignment method which follows is much more accurate and should be used whenever possible.

1. With receiver in operating condition, tune in station.

2. Connect VTVM from positive terminal of electrolytic capacitor C-50B to ground.

3. Maintain 5 volts, or less, at VTVM by adjustment of fine tuning and contrast control (or by removal of antenna, if necessary) while peaking T-8 primary (top) and L-38 & L-39 for maximum output. (See Figure 8.)

4. Tune for normal picture and carefully note voltage developed at the positive terminal of C-50B.

5. Move meter to junction of R-54 & R-56 (dummy pin on V-9 socket, marked "X" in Figure 8).

6. Adjust T-8 secondary (bottom) to give a reading on the VTVM of exactly one-half of reading in step 4.

4.5 MC TRAP ADJUSTMENT

Tune receiver to a local station and adjust 4.5 Mc trap L-34 for minimum beat interference in the picture by locating the two points of adjustment at which the beat is just noticeable. Rotate the core toward the center of these two points. Use the minimum amount of inductance (core out of coil) that will result in no apparent beat interference.

HORIZONTAL HOLD ADJUSTMENT

The HORIZONTAL HOLD control should have a sync range of approximately 20°. If the control is too critical, adjust as follows:

1. Shunt the HORIZONTAL OSCILLATOR coil L-40 to ground with a .25 mf 400V capacitor. This may be done with the chassis in the cabinet by placing the capacitor across the two-pin HORIZONTAL OSCILLATOR TEST RECEPTACLE. Increase brightness.

2. With the HORIZONTAL SIZE control, reduce the picture size so that the right edge of the raster can be seen as viewed from the front of the set. Adjust the HORIZONTAL HOLD control for about 1/16" of sync pulse. (The sync pulse appears as a darker gray bar at the right edge of the blanking pulse. The blanking pulse is the gray bar at the right edge of the raster.

3. Remove the .25 mf capacitor from across the HORIZONTAL OSCILLATOR coil.

4. Adjust the HORIZONTAL OSCILLATOR coil until the same amount of sync pulse can be seen as was noted in step 2.

If the deflection yoke shifts, the picture will be tilted. To correct, loosen the thumbscrew on top of the deflection yoke and rotate yoke until the picture is straight. Before tightening the thumbscrew, make certain that the deflection yoke is as far forward as possible.

ION TRAP ADJUSTMENT

1. Turn on the receiver and set brightness control at mid-range.

2. Rotate the ion trap from left to right, and position back and forth until the brightest raster is obtained.

3. Adjust for proper screen coverage regarding size, centering, tilt and shadow.

4. Readjust ion trap for maximum brightness with contrast control set for maximum usable contrast and brightness control set for proper black background in picture.

NOTE: The ion trap should be of the proper magnetic strength, so that the ion trap magnet does not touch the base of the picture tube, or be positioned forward of the slash in the gun structure at proper setting. If either of these conditions exist, full brightness may not be obtained, and the life of the picture tube may be shortened if the ion trap is not replaced with one of correct strength.

PRODUCTION CHANGES

The first production chassis number carries the suffix "A-00" (i.e., TS-525A-00). With the first minor electrical revision, the suffix becomes "A-01" and with each subsequent minor change "A-02", "A-03", etc. The first major revision changes the suffix to "B-00" and, as before, each following minor change is labeled "B-01", etc.

Mechanical differences between chassis are indicated by addition of a prefix to the basic chassis (i.e., RTS-525A-00). These prefixes may be assigned in random sequence but will be confined to the end of the alphabet to avoid confusion with the A, B, C, etc., electrical change suffixes.

A "Y" suffix added to basic chassis (i.e., TS-525YA-00, etc.) indicates that the chassis contains a factory-installed UHF tuner.

Chassis Coding	Changes
(TS-525 Series Only)	
A-01	To improve the IF response C-38 (470 mmf) changed to .001 mf; C-40 (560 mmf) moved to a direct chassis ground.
A-02	To aid the magnetic centering device in horizontal centering and reduce neck shadows, a non-adjustable horizontal centering circuit is added as follows: 1. C-106 (.1 mf) replaced with linearity coil L-44 to provide a DC path through the horizontal deflection yoke. 2. Connection between lugs 4 and 5 of the horizontal output transformer (T-13) removed and an 18 ohm resistor inserted between lugs 4 and 5 to force current through yoke. 3. Leads of L-41 (RF choke) and R-83 (150K resistor) connect to lug 4 of the output transformer; the lead of L-44 connects to lug 5.
A-03	R-66 (4.7M grid to ground resistor of 1st sync separator) changed to 1.5M and ground end re-connected to cathode (pin 3) of V-13 to improve sync range at high contrast levels.

TROUBLE-FINDING CHART for Motorola TS-525, TS-528, and TS-603.

SYMPTOM	CONTROLS	CHECK OR ADJUST	TUBES	MISCELLANEOUS CHECKS
SET DEAD (tubes not lighting)	Off-On volume	Is set plugged in? Is back cover on? Is AC line voltage available at outlet? (Check with lamp)		Filament fuse F-1
(tubes are lit)		Power fuse, R-64. Is speaker plugged in? Replace any tubes that do not light.	V-11	
NORMAL RASTER NO PICTURE NO SOUND	Channel selector (on station?)	Antenna connections. Is station on air?	V-1, 2, 3, 4, 5, 11 & 12	B+ voltage. Video detector, CR-1. AGC voltage. RF, IF or mixer stages.
WEAK PICTURE (insufficient contrast)	Contrast. Fine tuning. Channel selector on correct channel?	Antenna connections	V-1, 2, 3, 4, 5, 6 & 12	AGC voltage. Contrast control. RF, IF, mixer & AGC stages
LOW BRIGHTNESS OR NO RASTER	Brightness.	Ion trap magnet	V-15, 16, 17, 18, 19 & 11	High voltage at picture tube anode. Drive voltage, pin 5 V-16. Bootstrap voltage. B+, B++ and CRT voltages. Solder connections, base of CRT. Voltages & waveforms in V-15 & V-16 circuits. Horizontal output transformer & deflection yoke.
POOR VERTICAL LINEARITY AND/OR SIZE. HORIZ. WHITE LINE. (no vert. sweep)	Vertical size. Vert lin. Reduce brightness & return to normal when trouble is cleared.		V-14.	Bootstrap voltage. Voltages in V-14 circuit. Electrolytics, C-99 & C-74C. Vertical output transformer & deflection yoke.
VERTICAL INSTABILITY, PICTURE ROLLS	Vertical hold		V-13, 14	AGC voltage. Voltages in V-13 & V-14A circuit. Interference. Sync clipping at video amplifier. Refer to tests under WEAK PICTURE. Abnormal power supply ripple. Insufficient bootstrap filtering. Video detector.
BUZZ IN SOUND	Fine tuning contrast	Excessive signal	V-7, 8, 9, 10 & 11	Ratio det. alignment. Sync clipping in video section. Improper AGC action. Power supply filter & sweep circuit bypass capacitors. Heater-cathode shorts in sound tubes.
EXCESSIVE CONTRAST, NEGATIVE PICTURE	Contrast		V-1, 2, 3, 4, 5, 6 & 12	AGC voltage and AGC circuit. Video det. Video det. load resistor. Leakage between prim. & sec. in video IF coils. Proper pulse from horiz. output to AGC tube. Pulse coupling capacitor to AGC tube C-107
WIDE HORIZ. BAR OR GRADUATION IN SHADING VERTICALLY (Set may have poor vert. sync)			V-1, 2, 3, 4, 5, & 6	Heater-cathode short in any video circuit. Excessive power supply ripple (may have hum in audio). Selenium rectifiers. Heater-cathode short in V-10A (loud hum in audio). Picture tube.

Motorola TV

CHASSIS
TS-418 & 518 SERIES

TV CHASSIS - Chassis WTS-518 contains 16 circuit tubes plus a 21YP4 21" glass, rectangular, spherical face, electrostatically focused picture tube. The picture, sound, and scanning circuits, together with a selenium rectifier half-wave doubler "B" supply, are contained on a single chassis. A series heater circuit is used. The 300 ohm input impedance is matched to the 75 ohm TT-69 tuner impedance by use of a balun line. Field installation of UHF convertor in this chassis is not recommended.

The suffix "Y" indicates that the TV chassis has a built-in VTT-50MA UHF tuner and uses a WTT-24AY VHF tuner.

TS-418 - Same as WTS-518 except uses a 17HP4B aluminized picture tube. The picture tube mounting parts are changed to accommodate smaller tube.

VTS-418 - Same as TS-418 except uses a 17HP4 non-aluminized picture tube.

VTS-518 - Same as WTS-518 except for 21YP4A aluminized picture tube.

RECEIVER MODEL BREAKDOWN CHART

Model	Description	TV Chassis
17T20	Table, mahogany-metal	TS-418
Y17T20	Table, mahogany-metal	TS-418Y
17T20B	Table, beige-metal	VTS-418
Y17T20B	Table, beige-metal	VTS-418Y
17T20E	Table, ebony-metal	VTS-418
Y17T20E	Table, ebony-metal	VTS-418Y
17T20M	Table, maroon-metal	VTS-418
Y17T20M	Table, maroon-metal	VTS-418Y
21T16	Table, mahogany-metal	WTS-518
Y21T16	Table, mahogany-metal	WTS-518Y
21T16B	Table, beige-metal	WTS-518
Y21T16B	Table, beige-metal	WTS-518Y
21T16E	Table, ebony-metal	WTS-518
Y21T16E	Table, ebony-metal	WTS-518Y
21T17	Table, mahogany-masonite	VTS-518
Y21T17	Table, mahogany-masonite	VTS-518Y
21T17B	Table, limed oak-masonite	VTS-518
Y21T17B	Table, limed oak-masonite	VTS-518Y
21K19	Console, mahogany-masonite	WTS-518
Y21K19	Console, mahogany-masonite	WTS-518Y
21K19B	Console, limed oak-masonite	WTS-518
Y21K19B	Console, limed oak-masonite	WTS-518Y
21T15	Table, maroon	WTS-518
Y21T15	Table, maroon	WTS-518Y

ALIGNMENT

NOTES: IMPORTANT

NEVER GROUND THE RECEIVER CHASSIS DURING TESTING OPERATIONS OR INSTALLATION UNLESS AN ISOLATION TRANSFORMER IS USED.

At all times, keep the marker generator output low enough to prevent the marker from distorting the response curve.

Some coils resonate at two settings of the core, the correct setting is at the outer end of the winding.

For complete receiver alignment, use the following procedure in sequence. Line voltage must be 117 volts AC; if not, adjust with variac.

IF AND MIXER ALIGNMENT

1. Remove horizontal output tube (V-15) to eliminate RF interference. Complete filament circuit with a 25BQ6 tube or other type with similar filament characteristics and base connections, with all pins clipped off except heaters.

2. Remove antenna and make following connections: (See Figure 4).

a. Connect a 3 volt battery to pin 1 (AGC bus) of service test receptacle.

b. Disable tuner oscillator by grounding pin 9 of V-2 (6U8).

c. Connect sweep generator to IF test receptacle, and oscilloscope to video detector load.

3. Center sweep generator frequency at 24.6 Mc with a sweep width of 10 Mc and adjust generator output below point of receiver limiting (approximately 3 volts peak-to-peak at video detector load).

4.

Adjust	At Marker Freq	
L-12	21.9 Mc	min output (See IF response curve -Figure 4)
T-4	26.6 Mc	26.6 Mc marker (See IF response curve - Figure 4)
T-6	at top of curve	flat response (See IF response curve -Figure 4)
T-5	22.9 Mc	22.9 Mc marker (See IF response curve -Figure 4)
T-6	at top of curve	flat response (See IF response -Figure 4)

As some adjustments interact, repeat as necessary to obtain proper curve. (Move generator to mixer test receptacle and short across R-11 (4700 ohms).

T-3A & B	26.4 & 22.9 Mc	See mixer response curve -Figure 4. As adjustments interact, adjust simultaneously.

NOTE: If desired response cannot be obtained, recheck tuning of 21.9 Mc trap (L-12). Accuracy of this adjustment is important

(Alignment continued on the page after the double-page circuit.)

MOTOROLA TS-418 and TS-518B-00 Series

NOTES

VOLTAGE MEASUREMENTS

1. MADE WITH A VTVM FROM POINT INDICATED TO CHASSIS.
2. LINE VOLTAGE - 117 VOLTS
3. ANTENNA DISCONNECTED. (S2 IN LOCAL POSITION.)
4. CHANNEL SELECTOR SWITCH ON CHANNEL WHICH DEVELOPS LESS THAN 1 VOLT NOISE AT PIN NO. 3 OF TEST RECEPT.
5. CONTRAST CONTROL MAXIMUM CLOCKWISE POSITION.
6. ALL OTHER CONTROLS IN NORMAL OPERATING POSITION.
7. # VARIES WITH SETTINGS OF CONTROLS.

CAUTION: DO NOT ATTEMPT VOLTAGE READINGS ON THE 1B3GT OR SCOPE READINGS ON THE 25B06GT PLATE WITH ORDINARY EQUIPMENT

WAVEFORMS

1. OBSERVED ON DUMONT MODEL 241 OSCILLOSCOPE.
2. CONTRAST CONTROL SET FOR SIGNAL OF 45V P TO P AT PLATE OF VIDEO AMP TUBE
3. ALL OTHER CONTROLS IN NORMAL OPERATING POSITION.
4. 25B06GT HV GEN TUBE REMOVED TO ELIMINATE HV PULSE INTERFERENCE FROM SCOPE WHEN OBSERVING ALL WAVEFORMS, EXCEPT THOSE FROM PHASE DET THROUGH HORIZ CIRCUIT

GENERAL

RESISTORS INDICATED IN OHMS, K = 1000 OHMS

CAPACITORS INDICATED IN MICROMICROFARADS UNLESS OTHERWISE SPECIFIED WHEN INDICATED IN MICRO-MICROFARADS THEY ARE CERAMIC DISC, TUBULAR, OR MICA TYPES, EXCEPT FOR VALUES SHOWN IN RTMA CODE, SUCH AS 47,000, WHICH ARE THE MOLDED PAPER TYPE AND PREFERRED WHERE INDICATED

COILS INDICATED IN MICROHENRIES

⊕ = IRON TUNING CORES

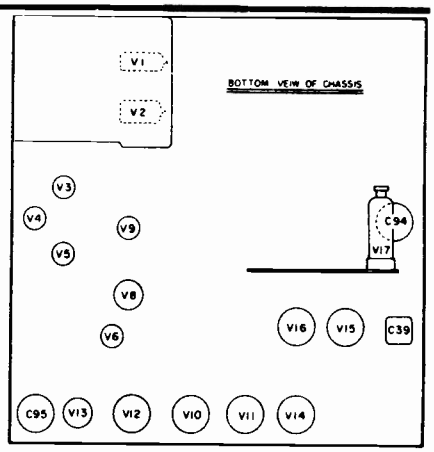

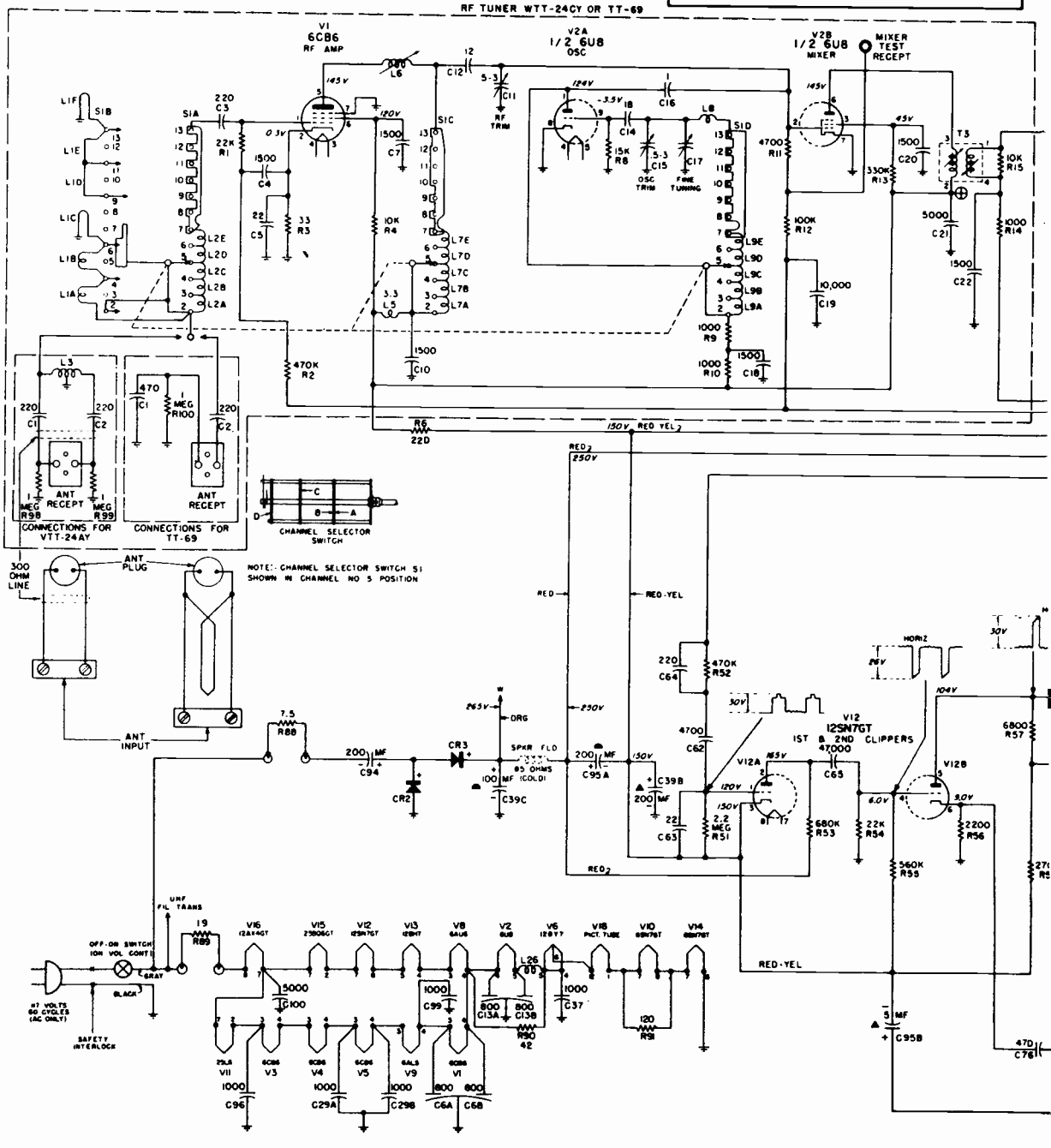

MOST-OFTEN-NEEDED 1955 TELEVISION SERVICING INFORMATION

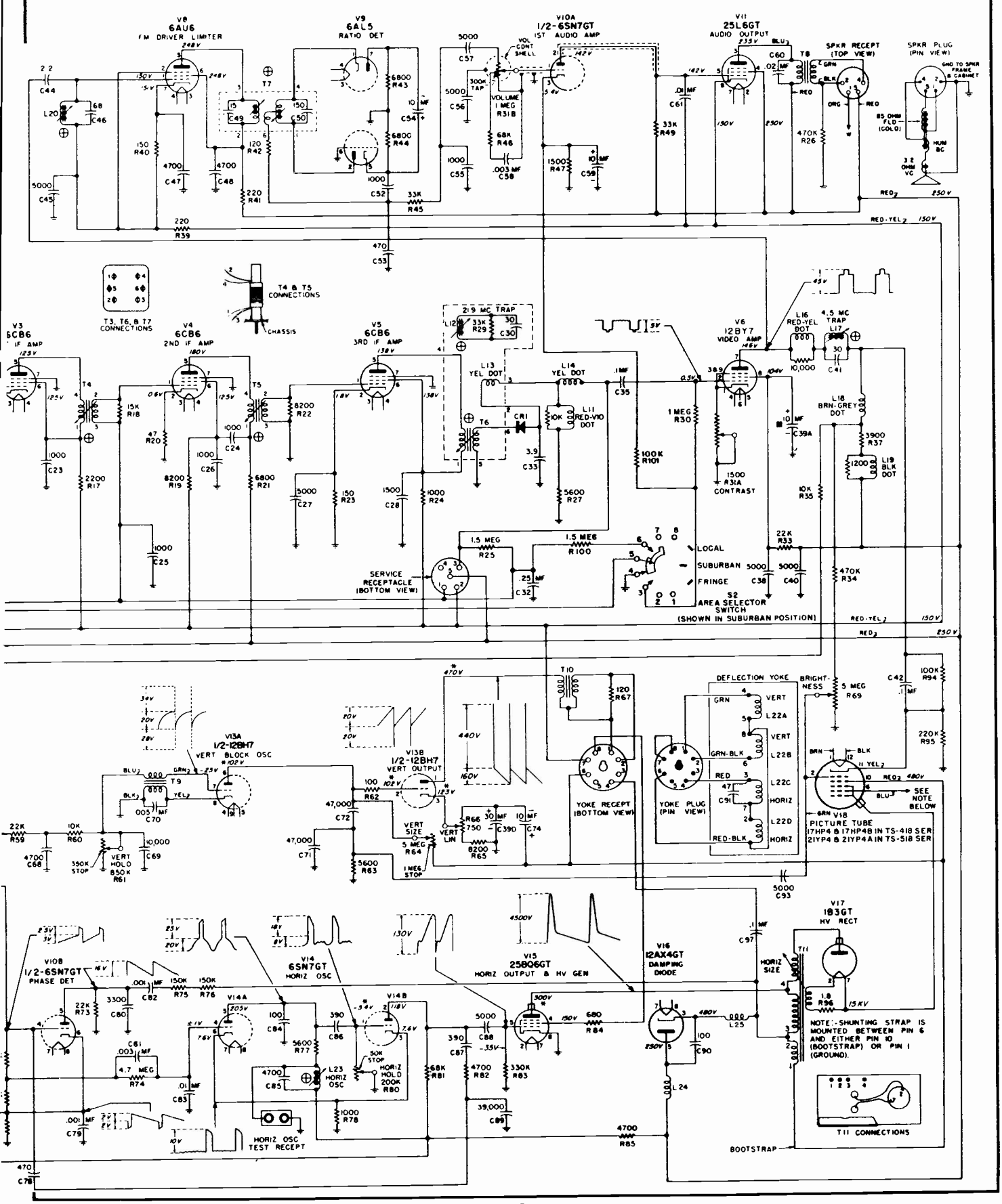

MOTOROLA TS-418 and TS-518 Series, Alignment Information Continued

Bandwidth may be determined by noting the frequencies at which the markers fall at the 50% points. Mixer and IF bandwidth over 3.5 Mc may cause loss of picture quality, and less than 3.2 Mc, a loss of audio.

5. Remove AGC bias battery, BANDWIDTH SHOULD NOT CHANGE OVER .2 Mc.

6. Decrease generator signal until there is a marked decrease in the oscilloscope waveform. Unwanted regeneration will be indicated by sharp peaks on the overall response curve.

AUDIO ALIGNMENT

This alignment may be made by injecting an accurate 4.5 Mc signal at the video amplifier grid; however, the station alignment method is much more accurate and should be used whenever possible. Station alignment method follows:

1. With receiver in good operating condition, tune in station.

2. Connect VTVM from positive terminal of C-54, electrolytic capacitor to ground.

3. Maintain 5 volts, or less, at VTVM by adjustment of fine tuning and contrast control (or by removal of antenna, if necessary) while peaking L-20 and T-7 primary (top) for maximum output.

4. Move VTVM connection to junction of C-2 (1000 mmf) and R-45 (33K). Set fine tuning for normal picture.

5. Adjust T-7 secondary (bottom) for zero reading on VTVM.

6. Recheck as in steps 2 and 3 and, if necessary, readjust primary of T-7.

4.5 MC TRAP ADJUSTMENT

Tune receiver to a local station and adjust 4.5 Mc trap (L-17) for minimum beat interference in picture by locating the two points of adjustment at which the beat is first noticeable, and rotating core to the center of these two points. Use the minimum amount of inductance (core out of coil) that will result in no apparent beat interference.

If a station signal is not present, use the following method, which requires proper alignment of the audio system.

1. Tune the receiver to a low noise, unused channel.

2. Connect AM signal generator to picture tube cathode lead (yellow) thru a 5000 mmf capacitor. Connect ground lead to chassis.

3. Set generator to 4.5 Mc.

4. Move VTVM to positive terminal of C-54 capacitor, with ground lead to chassis.

5. Adjust 4.5 Mc trap (L-17) for minimum VTVM reading. (Generator output should be adjusted for 5 volts at VTVM.)

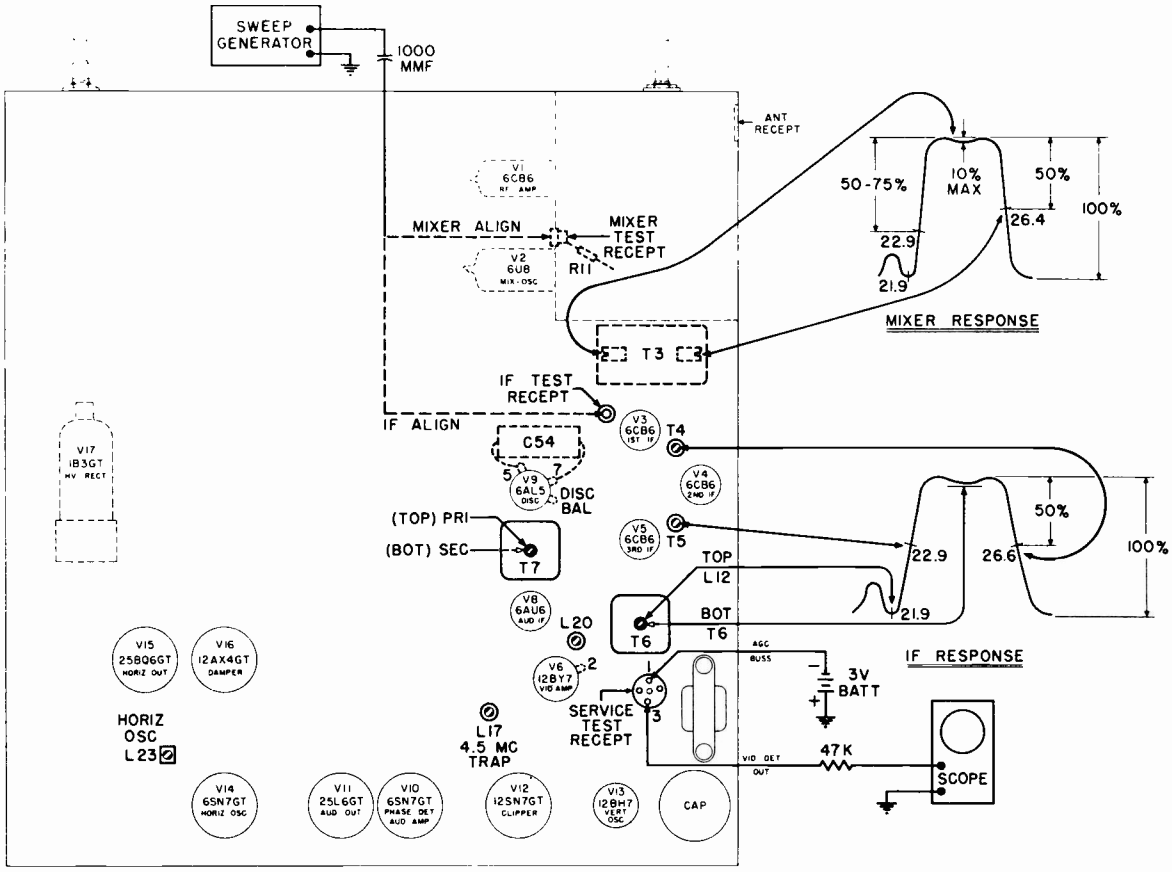

TUBE LOCATIONS & IF ALIGNMENT DETAIL

Olympic

R - S - U CHASSIS

MODELS		
	21KS22	21CS18
17TR10	21TS11	21TU14
17TR19	21CS12	21CU15
17CR20	21TS17	21CU16

These models are nineteen tube direct viewing television receivers differing only in type of cabinet, size of speaker and their use in conjunction with a radio receiver and automatic record changer in the combination models. A 17" electrostatically focused rectangular tube (17HP4) is used in the 17" models and a 21" magnetically focused and rectangular tube {21ZP4B / 21ZP4A} is used in the 21" models. Replacement, in all cases, must be of the identical size and type.

DEFLECTION YOKE ADJUSTMENT

If the lines of the raster are not horizontal or squared with the picture mask. Loosen the deflection yoke adjustment screw and rotate the deflection yoke until this condition is obtained, and retighten the yoke adjustment screw. If neck shadow is evident or the corners of the raster are dark, the deflection yoke must be moved forward as far as possible and the wing screw retightened.

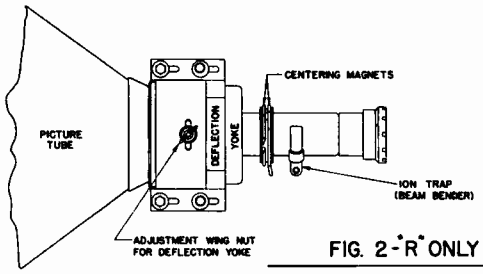

FIG. 2-"R" ONLY

CENTERING MAGNET ADJUSTMENT (17"—"R" ONLY)

The 21" receivers are electromagnetically focused and centering is accomplished by adjusting an arm which extends vertically from the front of the focus coil. This arm may be rotated, for a limited distance, around the neck of the tube and may also be moved up and down. The physical setting of the focus coil itself in relation to the neck of the tube will also affect picture position.

CENTERING ADJUSTMENT (21" — S-U — ONLY)

The 21" receivers are magnetically focused and centering is accomplished by adjusting an arm which extends vertically from the front of the focus magnet. This arm may be rotated for a limited distance, around the neck of the tube and may also be moved up and down. The physical setting of the focus coil itself in relation to the neck of the tube will also affect picture position. Before the adjustment arm is used, it should be ascertained that (1) the focus magnet is at right angles to the neck of the tube (by setting the two nuts which tighten the tube support rods) and (2) that the neck of the tube is directly centered in the focus magnet (by loosening the two mounting screws on either side of the focus coil and sliding up or down).

HORIZONTAL WIDTH & DRIVE ADJUSTMENT

The Horizontal Drive Trimmer should be screwed tight (clockwise) and then backed off (counter-clockwise) until Horizontal Drive bars appear. Then turn Drive Trimmer in again (clockwise) until drive bars, just disappear. (Note: In some sets no horizontal drive bars will appear regardless of Drive Trimmer adjustment. In these sets the trimmer should be set for proper width.

Important: The horizontal oscillator frequency must be checked for proper range of horizontal control after any adjustment of horizontal drive (C67). Any adjustment of C67 will usually require resetting of the horizontal frequency adjustment coil (L-16).

IF ALIGNMENT PROCEDURE

(Continued on page 92)

ORDER OF ALIGNMENT

When complete receiver alignment is necessary, it should be performed in the following sequence:

(1) Accompanying Sound Trap
(2) Adjacent Sound Trap
(3) Pix IF Coils
(4) 4.5 MC Trap
(5) 4.5 MC Sound IF and Ratio Detector

After removing chassis from cabinet re-connect power and speaker plugs.

If a local station is not operating on Channel 9 set the tuner to this channel, turn on power switch and proceed as follows: (If 9 is a local station, use Channel 8 or 10.)

ACCOMPANYING AND ADJACENT SOUND TRAPS

Insert a 100,000 ohm 1/2 watt resistor in series with the "Hot Lead" of the electronic voltmeter and connect to the junction of L12 and C25. Meter switch should be set to the lowest negative scale. Ground lead of meter should be connected to chassis.

Remove the shield of the RF Oscillator and Mixer tube (V2) from ground clips leaving shield resting on tube and connect hot lead of the RF Signal Generator to it. This will couple generator output to mixer plate.

Set the generator frequency accurately to 21.75 MC, and adjust (L9) sound trap (See Fig. 6 Tube and Trimmer Layout) for **minimum** reading on voltmeter.

Set the generator frequency accurately to 27.75 MC and adjust (L6) Adjacent Sound Trap for **minimum** reading on voltmeter.

ADJUSTMENT OF HORIZONTAL OSCILLATOR

(1) Allow set to warm up to operating temperature. Select station operating normally.

(2) Short out horizontal Phasing Coil (L 17) Terminals C and D.

(3) Set horizontal hold control at maximum clock-wise rotation.

(4) Adjust horizontal frequency screw (L 16) until picture falls into sync. Turning the horizontal frequency screw (L 16) clockwise lowers the frequency, (bars sloping downward to left). Turning the screw counter-clockwise increases frequency (bars sloping downward to right).

(5) Connect vertical input lead of oscilloscope with 5 MMF isolating condenser in series to terminal "C" of horizontal oscillator transformer and ground oscilloscope to chassis. Set frequency ot scope to approximately 5 KC.

(6) Remove short from terminals of the horizontal phasing coil (L 17) and adjust screw (L 17) until wave shape as observed on scope is like that shown in sketch. (See Fig. 3.)

(7) Some further adjustment of horizontal frequency screw (L 16) may be necessary to keep picture in sync after adjusting L 17 for proper wave shape.

(8) Remove scope from terminal "C" and retouch L 16, as per "9" below.

(9) Turn horizontal hold control through entire range. Picture should fall out of sync at either end of rotation. At full clockwise rotation blanking bar or jitter should be evident. At full counter-clockwise position picture should fall out to 4½ to 5 bars sloping downward to the left. (If picture stays in sync the tuner switch should be rotated to interrupt signal momentarily)

ADJUST FOR EQUAL PEAKS

FIG. 3

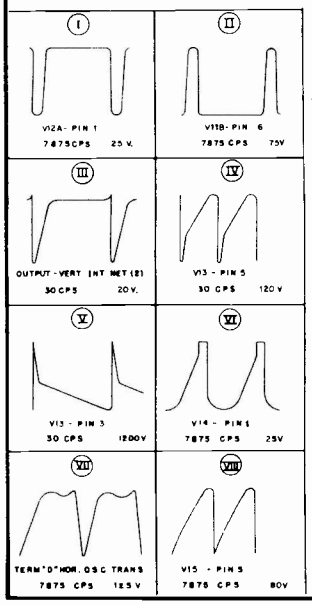

RUN Nº 1 WAS: (CONDENSERS) C42 WAS .05/400V AND C61 WAS .001/600V ± 10% (OIL FILLED). (RESISTORS) R12 WAS 10KΩ; R30 WAS 47KΩ 2W; R38 WAS 33KΩ; R46 WAS 22KΩ; R53 WAS 12KΩ±10%; R54 WAS 15 MEG.Ω ±10%, R76 WAS 22KΩ 2W. FUSE WAS ¼ AMP.

RUN Nº 2 WAS: ADDED C68 CONDENSER; L10 COIL AND R29 RESISTOR. (CONDENSERS) C58 WAS .1/400V.; C61 & C68 WAS 680 μμf. (RESISTORS) R72 WAS 82KΩ ± 5% 1W.; R79 WAS 47KΩ 1W.; B+ 450V LINE IN HORIZ. OSC WAS +380V.

RUN Nº 3: (AS SHOWN) EXCEPT USE 1B3/GT TUBE (V16) REPLACES 1X2B AND TR-2771-2 HORIZ. OUTPUT & H.V. TRANS. (T5) REPLACES TR-2771-1.

NOTES:
1. ALL RESISTORS ±20% TOLERANCE, ½ WATT UNLESS, OTHERWISE SPECIFIED.
2. ALL MICA AND CERAMIC CONDENSERS ±20% TOLERANCE, UNLESS OTHERWISE SPECIFIED.
3. ALL VOLTAGES MEASURED BETWEEN POINTS INDICATED AND CHASSIS, USING AN ELECTRONIC VOLTMETER. ALL VOLTAGE READINGS ±15%, MEASURED WITH AN INPUT VOLTAGE OF 117 VOLTS, 60 CYCLES, A.C. WITH INCOMING SIGNAL AND WITH CONTRAST CONTROL SET TO PRODUCE 30 VOLTS PEAK TO PEAK AT KINESCOPE.
4. ● CERAMIC CONDENSERS, DISC TYPE.

OLYMPIC CHASSIS

MODELS: 17"-"R", 21"-"S" & 21"-"U"

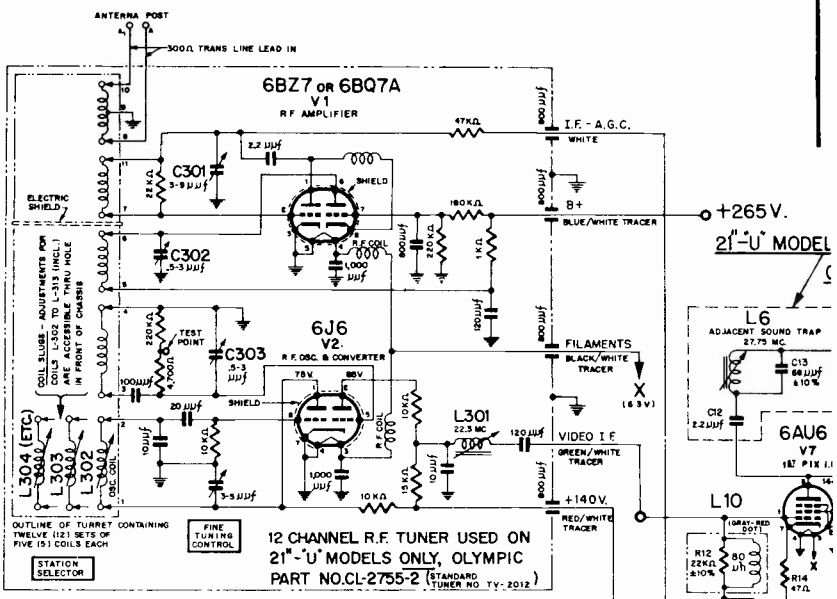

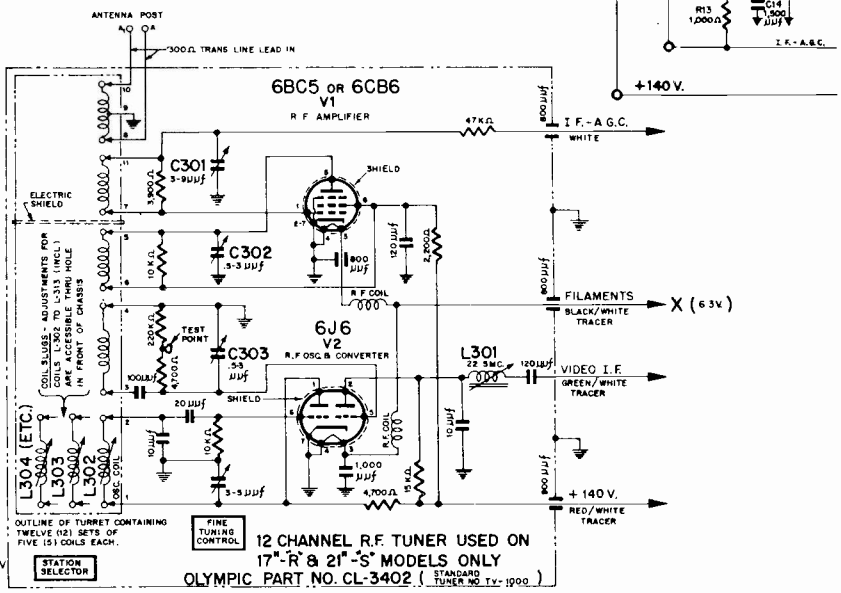

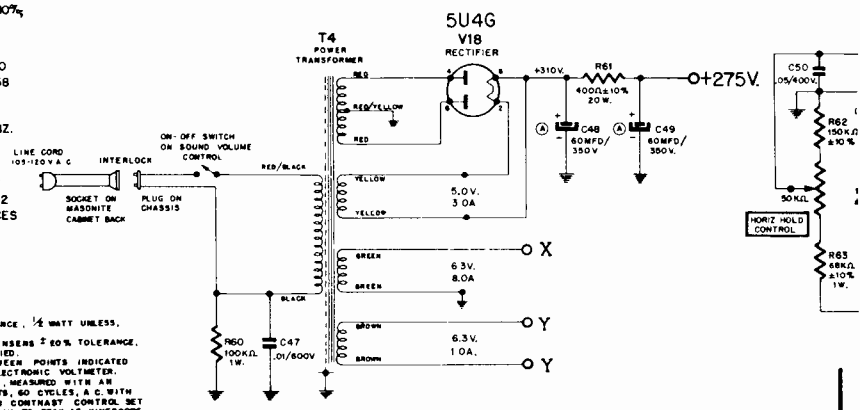

OLYMPIC RADIO & TELEVISION

Chassis R, S, and U

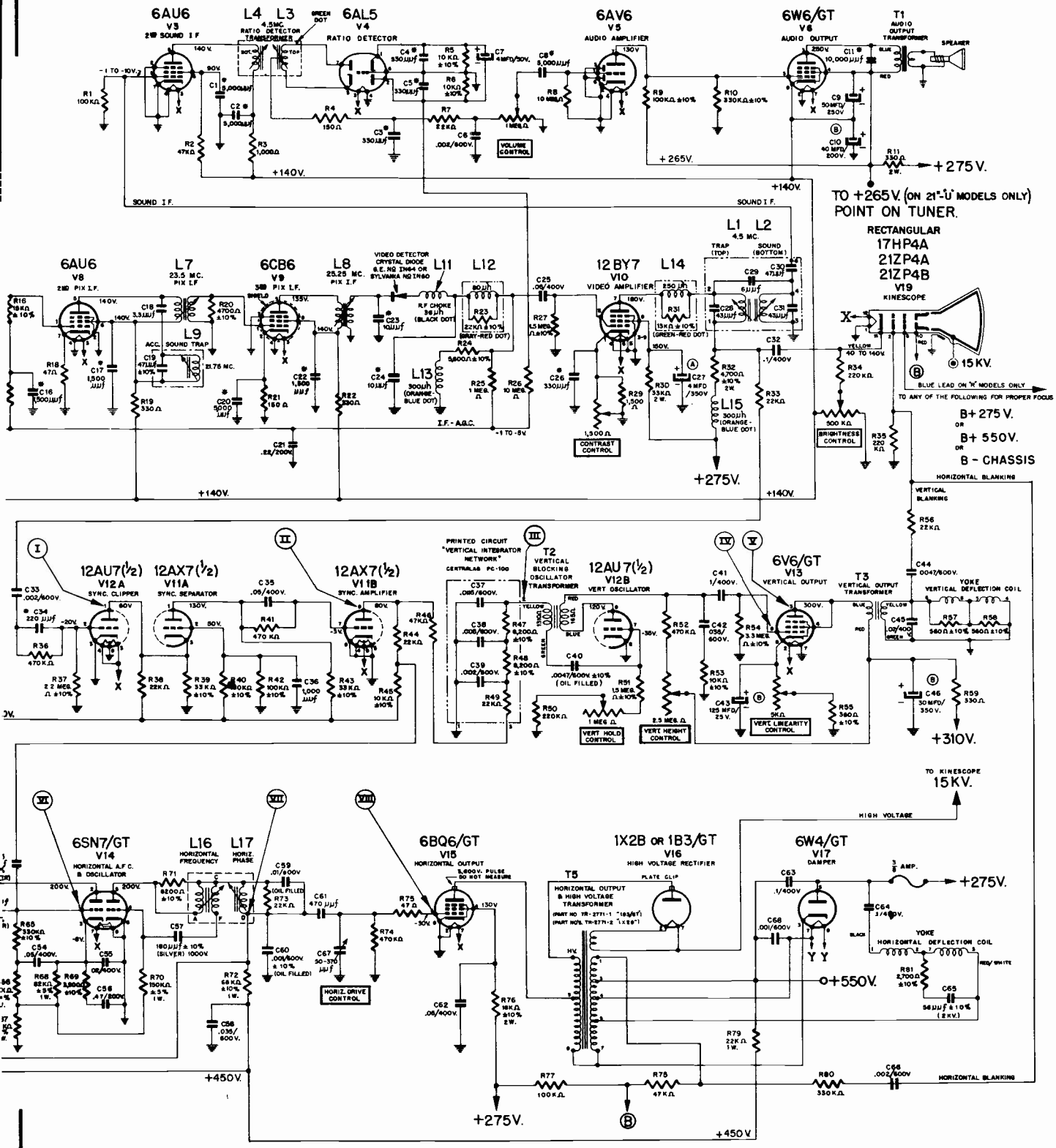

Olympic Chassis R, S, and U (Continued)

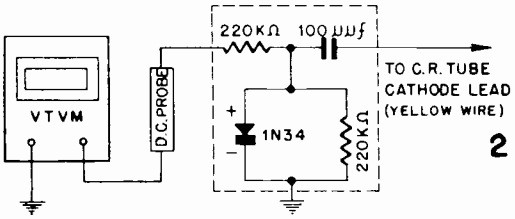

VOLTMETER AND CRYSTAL DIODE CONNECTIONS

FIG. 5

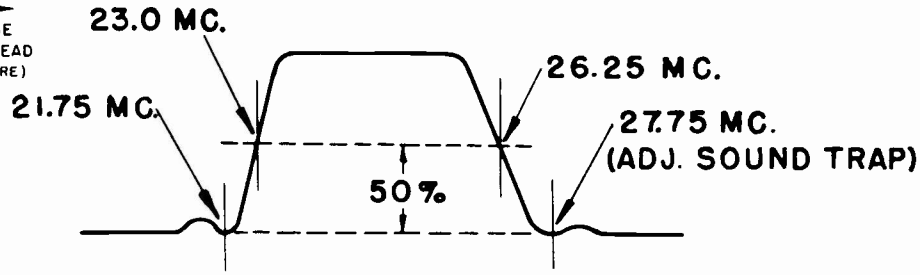

STANDARD RESPONSE CURVE FIG. 4

PIX IF COIL ADJUSTMENT

Adjust the following slugs for maximum output at frequencies and sequence indicated with meter and generator connected as above: (See Sound Traps above).

L301	22.5 MC
L5	25.75 MC
L7	23.5 MC
L8	25.25 MC

Note: After setting L5 **DO NOT** readjust to improve wave shape.

If oscillation occurs during alignment, temporarily raise frequency of L8 by turning screw counter-clockwise until screw projects approximately ¾". Oscillation is evidenced by high reading on voltmeter (—5V to —20V) with signal generator OFF and no signal coming in through the antenna terminals. After properly adjusting L301, L5 and L7 reset L8 to proper frequency, if it had been necessary to detune.

Connect hot lead of sweep generator through a 330 uuf condenser to test-point on tuner and connect ground lead to chassis.

Connect vertical input terminal of oscilloscope to junction of peaking coil L12 and C25 and connect ground lead of scope to chassis.

Connect 1.5 V flashlight battery with positive terminal to chassis and negative terminal to junction of R13 and C21. This point is AGC bias voltage. Set tuner to Channel 9 unless local station is operating on this frequency, in which case an adjacent channel should be used.

Set Sweep Generator frequency to IF sweep on the 20 to 30 MC range.

Adjust sweep generator output to produce a curve on the scope which is approximately 2/3 of the screen diameter.

Loosely couple output of RF signal generator by using shield on V2 and set frequency of RF signal generator to 26.25 MC (marker).

Curve shown on scope should be similar to the response curve shown in Figure 4. For proper setting of the pix carrier the 26.25 MC marker should appear on the curve at a point approximately 50% of the vertical height of the curve.

To obtain this setting retouch L8.

Reset RF signal generator frequency to 23.0 MC and retouch L301 and L7 for correct positioning of marker on curve.

Recheck setting of 26.25 MC marker to make sure that position has not shifted on curve.

Disconnect bias battery.

Note: If the curve cannot be made to appear as above due to a local station or other interference, or if multiple markers appear, remove (V1 — 6BZ7 or 6BQ7) RF tube from tuner.

TRAP ALIGNMENT

Connect voltmeter lead to Diode crystal rectifier as shown in Fig. 5. Connect Diode crystal rectifier between C.R. Tube Cathode lead (yellow wire) and chassis ground. Signal generator is connected at junction of L12 and C33. Set contrast control at maximum and voltmeter to 3 volt scale (negative). Remove 6CB6 (V9) from socket. Use maximum output of generator at 4.5 MC. Adjust L1, top of TR-3386 for **minimum** reading on meter.

When it is necessary to retouch this trap in the field, proper adjustment can be made by using the local station signal and turning the Fine Tuning Control to bring fine herringbone sound beat into the picture. The 4.5 MC trap (L1) should then be adjusted to minimize this beat interference.

SOUND IF TRANSFORMER, (4.5 MC) AND RATIO DETECTOR ADJUSTMENT

In view of the fact that the transmitted sound signal from a TV station is probably the most accurate available, as far as frequency is concerned, it is recommended that a working signal be used for sound alignment. The set should be connected to an antenna, turned on, allowed to warm up for about 5 to 10 minutes and then tuned for the best picture. A vacuum tube voltmeter should be connected to Pin 2-V4 and the meter set to the minus 30 volt scale. The bottom of the 4.5 MC Sound IF Transformer (L2) and the primary of the Ratio Detector (L4 — bottom of the chassis) should be tuned for maximum deflection of the meter. The vacuum tube voltmeter should then be connected to the junction of R7 and C6 and one side of the volume control and the secondary of the Ratio Detector (L3 — top adjustment) should be adjusted for a zero reading with the meter set to the 3 volt scale. The secondary can also be adjusted by ear tuning L3 for the elimination of buzz in the sound.

Packard-Bell

The Packard-Bell television receivers described in this manual incorporate either chassis type 2740 or 2940-1. The television portion is identical on each, but the 2940-1 chassis includes a two tube standard broadcast tuner. All models use a 21 inch rectangular electrostatic focus picture tube.

The following table indicates the type chassis and TV tuner used in the respective models.

	VHF Tuner (10534A)	VHF/UHF Tuner (10535C)	Chassis Type
Model	2742	2842	2740
Model	2743	2843	2740
Model	2744	2844	2740
Model	2941	3041	2940-1

PRODUCTION MODIFICATIONS:

The following modifications were made after production of the receiver had begun and are listed to point out variations in production from the schematics shown in this manual. The reason for the change is shown in capital letters.

A. INCREASE TONE CONTROL RANGE. In early production of chassis 2740, capacitor C-11 was .005 mfd. Its value was changed to .01 mfd. This is the series capacitor in the tone control section.

B. INCREASE AUDIO OUTPUT. Ratio detector transformer 29068 was replaced by ratio detector transformer 29054. In connection with this change, R-7 was changed from 82 to 470 ohms, and a resistor R-97 (22,000 ohms, ½ watt, 10%) was added between the screen of V-2 and the low-B bus.

C. PREVENT REGENERATION IN MODELS USING VHF/UHF TUNER 10535C. (See Fig. 12).

1. Capacitor, ceramic, 5000 mmf, (23931) added as by-pass from R-F tuner filament terminal (C) to ground.
2. Capacitor, ceramic, 10,000 mmf, (23939) added as by-pass from 135 volt bus at power transformer to ground. The ground lug of terminal strip must be soldered to chassis.
3. Capacitor, ceramic, 5000 mmf, (23931) added as by-pass from pin 4 to pin 7 of V-9, 4th Pix I-F.
4. Radio frequency choke (29551) added between pin 4 of V-8 and pin 4 of V-9. These points were formerly connected directly together.
5. Resistor, 100 ohm, ½ watt, (73013) inserted between pin 6 of V-9 and tie point previously connected to it.
6. R-21, B+ dropping resistor to R-F tuner (4700 ohm 2 watt) replaced by 5000 ohm 5 watt 10% resistor.

D. IMPROVE SOUND I-F SENSITIVITY. Resistor R-1, 10,000 ohms, ½ watt, was removed from the receiver. This formerly was connected across the sound I-F input coil L-1.

MODELS WITH 2740 CHASSIS: IMPROVED PERFORMANCE IN FRINGE AND HIGH SIGNAL AREAS.

The addition of delayed AGC circuitry has been incorporated in the production of these models. Improved performance will be noted in fringe areas, as evidenced by an increase in signal-to-noise ratio due to the RF amplifier bias being held near zero for low signal input.

High signal areas will benefit because of the much greater input signal now required to produce overload or cross-modulation effects.

Chassis incorporating this delay circuit can be identified by the AGC control located on the chassis rear apron near the horizontal drive control.

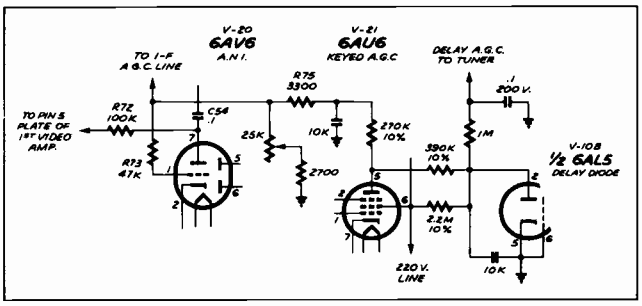

If the delayed AGC circuit is added to a 2740 chassis containing a VHF/UHF (all-channel) tuner, the following additional changes must be made:

1. Add ground wire directly to chassis from pin 3 (ground side of heater) on 2nd and 4th I-F tubes, V-7 and V-9.
2. Add ceramic capacitor, 5000 mmf, part number 23931, between pins 3 and 4 of 2nd I-F tube, V-7.
3. Also add a 5000 mmf capacitor, part number 23931, between pin 6 of pix detector, V-10, and tuner side of 1 megohm isolation resistor in delayed AGC circuit.

COMPLETE REALIGNMENT IS NECESSARY UPON INSTALLATION OF DELAYED AGC.

(Circuit diagram on page 94, over.)

NOTE: TUBE LOCATIONS, TEST POINTS, AND ADJUSTMENTS ON THE 2740 AND 2940-1 CHASSIS ARE IDENTICAL EXCEPT THAT THE 2740 DOES NOT HAVE THE STANDARD BROADCAST (AM) TUNER.

NOTES:
R-1 not used.
R-19 used on 2740, not used on 2940-1.
R-89 not used on 2740, used on 2940-1.
R-90 not used on 2740, used on 2940-1.
C-15 is .01 mfd on 2740, .005 mfd on 2940-1.
C-29 not used.
C-34 not used.
C-49 not used.
C-67 not used on 2740, used on 2940-1.

Packard-Bell Schematic Diagram Chassis 2740 (see bottom of preceding page for notes)

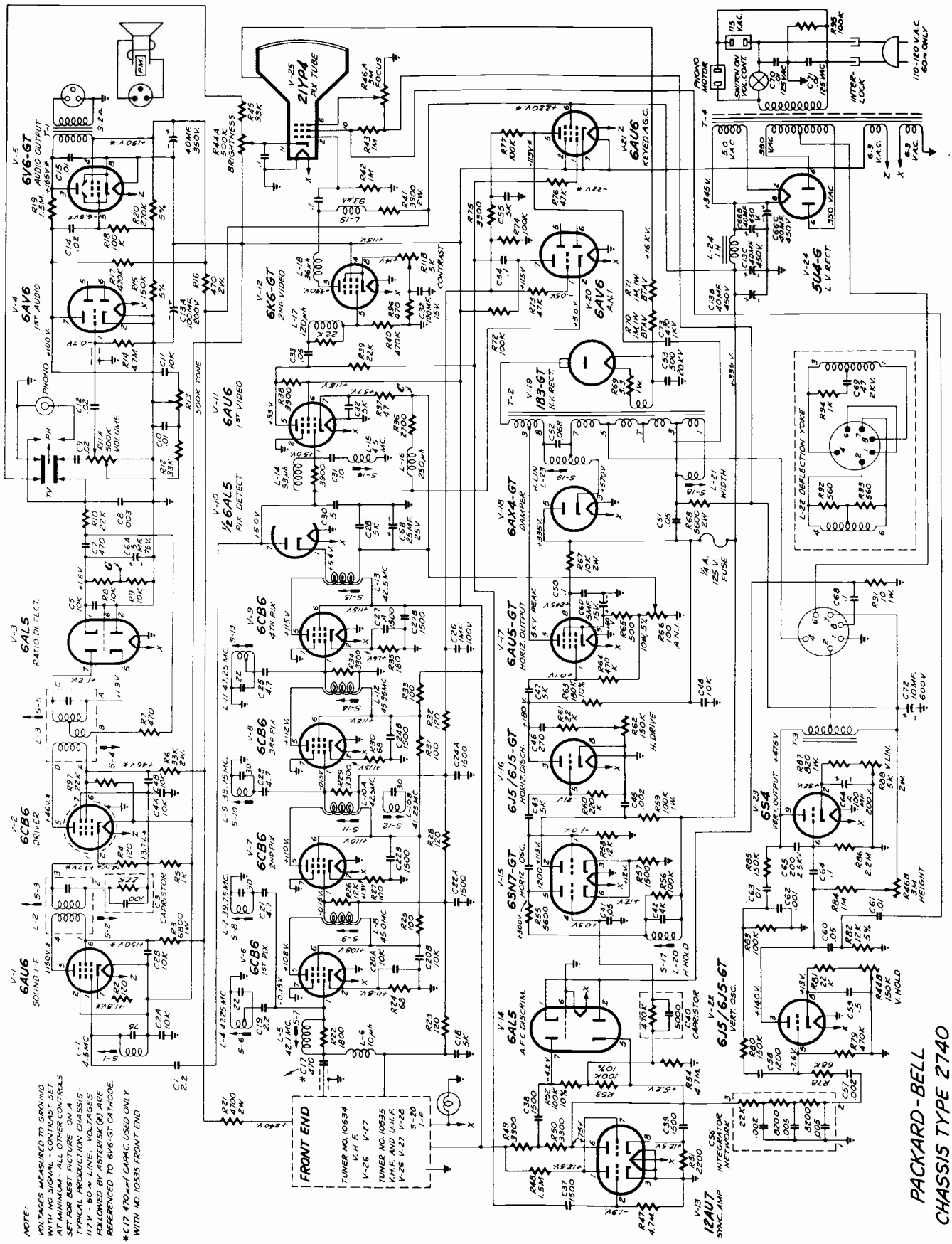

PACKARD-BELL CHASSIS TYPE 2740

PACKARD-BELL COMPANY *MODELS 2742, 2743, 2744 & 2941*
MODELS 2842, 2843, 2844, & 3041

ALIGNMENT PROCEDURE

GENERAL:

It is important that the service technician read and adhere to the alignment instructions in this section. This is especially important in the case of the picture I-F.

Some service technicians may be accustomed to aligning the picture I-F response curve on the oscilloscope alone. This procedure is not recommended because it is actually quite possible to get what appears to be an acceptable curve and still be lacking in horizontal resolution.

Instead, the spot frequency alignment outlined below should be followed.

In this procedure the sweep generator is fed in through the antenna terminals. The output impedance of the generator must match the 300 ohm input impedance of the set. A matching network may be devised to accomplish this. Fig. 7 shows a network for a generator with 75 ohms impedance. If the generator impedance is 50 ohms change the values to 56 ohms for the shunt resistor and 130 ohms for each of the series resistors.

Loose-coupling the signal generator to mixer tube (after step 10) is accomplished by disconnecting the tube shield from ground and connecting the generator between the shield and ground.

Test point locations are shown on the schematics, Figs. 17 and 18, and on the chassis illustration, Figs. 9.

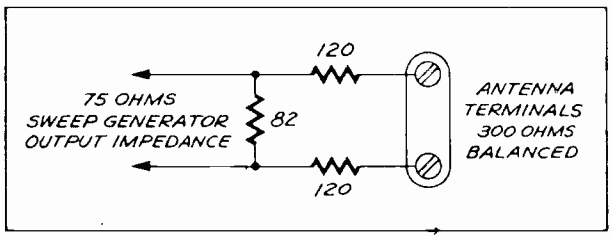

Fig. 7. Matching Network

PICTURE I-F ALIGNMENT:

1. Remove ANI tube, 6AV6 (V-20).
2. Connect a 3 volt battery between point "A" and ground, with the negative lead to point "A".
3. Connect a vacuum tube voltmeter between points "B" and "C", with the negative lead to point "C".
4. Remove I-F output plug from top of R-F tuner. Connect signal generator to plug between center pin and shield, using a .001 mfd isolating capacitor. Connect generator ground to shield. Keep leads as short as possible to prevent regeneration. Set generator output at maximum.

Step	*Sig. Gen. Frequency*	*Adjust*	*For*
5.	47.25 Mc.	S-6 and S-13	Minimum
6.	39.75 Mc.	S-8 and S-10	Minimum
7.	41.25 Mc.	S-12	Minimum
8.	42.50 Mc.	S-11 and S-15	MAXIMUM
9.	45.35 Mc.	S-14	MAXIMUM
10.	45.00 Mc.	S-9	MAXIMUM

Adjust generator output for 2.5 to 3 volt VTVM reading for steps 7 through 12.

REPEAT STEPS 5 THROUGH 10. Disconnect signal generator and replace I-F plug in tuner. Loosely couple generator to mixer tube (6J6) in R-F tuner*, keeping leads short. (See general instructions, above.)

11.	42.10 Mc.	S-7	MAXIMUM
12.	45.75 Mc.	S-20	MAXIMUM

(S-20 is the I-F adjustment on R-F tuner)

13. Disconnect VTVM and 3 volt battery.
14. Connect oscilloscope to point "B", using a 22,000 ohms isolating resistor in series with the scope probe. Connect an electrolytic capacitor, 5 mfd, 50 volt, between point "J" and ground, the negative lead going to point "J".
15. Connect sweep generator to antenna terminals through an impedance matching network. (See general instructions, above.)
16. Rotate tuner to channel 3, and set sweep generator to center frequency. With a sweep width of 10 Mc., adjust generator output to develop approximately 4 volts of A. G. C.
17. With signal generator loosely coupled to converter tube, adjust output to provide the markers shown on the response curve, Fig. 8. Check the position of the markers one at a time.
18. Observe the waveform obtained on the oscilloscope, and compare it with the waveform shown in Fig. 8. If the spot frequency alignment has been carefully done, the comparison will be favorable. However, slight retouching of the I-F adjustments may be required. It should not be necessary to change any adjustment appreciably. The markers should be located as follows:

    The 47.25 Mc., the 39.75 Mc., and the 41.25 Mc. markers at minimum response.

    The 45.75 Mc. marker at 50% response.
    The 42.25 Mc. marker at a minimum of 50% response.

    The 45.00 Mc. marker at 97% response.

The 45.00 Mc. marker must not exceed 97% response or picture may smear on higher channels.

*In 82-channel tuner, mixer tube is a 6U8.

PACKARD-BELL COMPANY

MODELS 2742, 2743, 2744 & 2941
MODELS 2842, 2843, 2844, & 3041

ALIGNMENT OF 4.5 Mc. TRAP:

1. Remove Pix Detector tube 6AL5, (V-10).
2. Connect signal generator between point "B" and ground through a .001 mfd isolating capacitor.
3. Turn contrast control to maximum.
4. Connect an R-F vacuum tube voltmeter to point "D". If an R-F VTVM is not available, connect a germanium diode crystal in series with the positive probe of a conventional VTVM.
5. Set signal generator to 4.50 Mc., exactly, with the output at one volt or more.
6. Adjust trap, S-16, for minimum VTVM reading.

NOTE: If signal generator is not capable of one volt output, it will be necessary to adjust the trap visually. To do this, observe the picture and adjust the trap to eliminate the 4.5 Mc. beat.

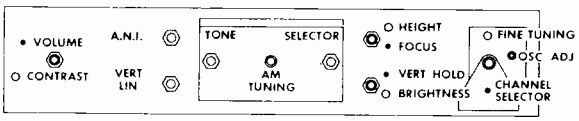

SOUND I-F AND DETECTOR ALIGNMENT:

1. Connect signal generator between point "B" and ground through a .001 mfd isolating capacitor.
2. Connect VTVM between points "E" and "F".
3. With generator frequency at 4.5 Mc., and an FM deviation of 7.5 Kc., adjust S-1, S-2, and S-3 for MAXIMUM output.
4. Connect AC voltmeter across speaker voice coil, and advance volume control to obtain indication on meter.
5. Adjust Ratio Detector primary, S-4, for MAXIMUM output.
6. Connect VTVM between points "G" and "H".
7. Adjust Ratio Detector secondary, S-5, for zero between positive and negative peaks.

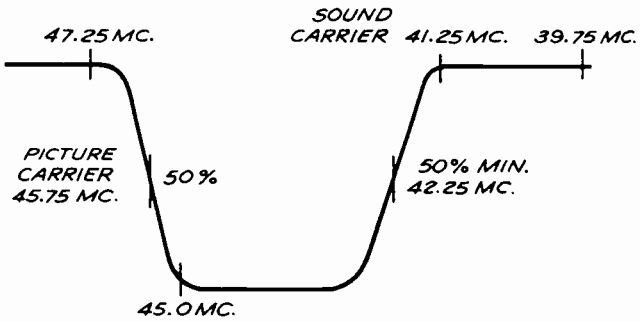

Fig. 8. I-F Response Curve

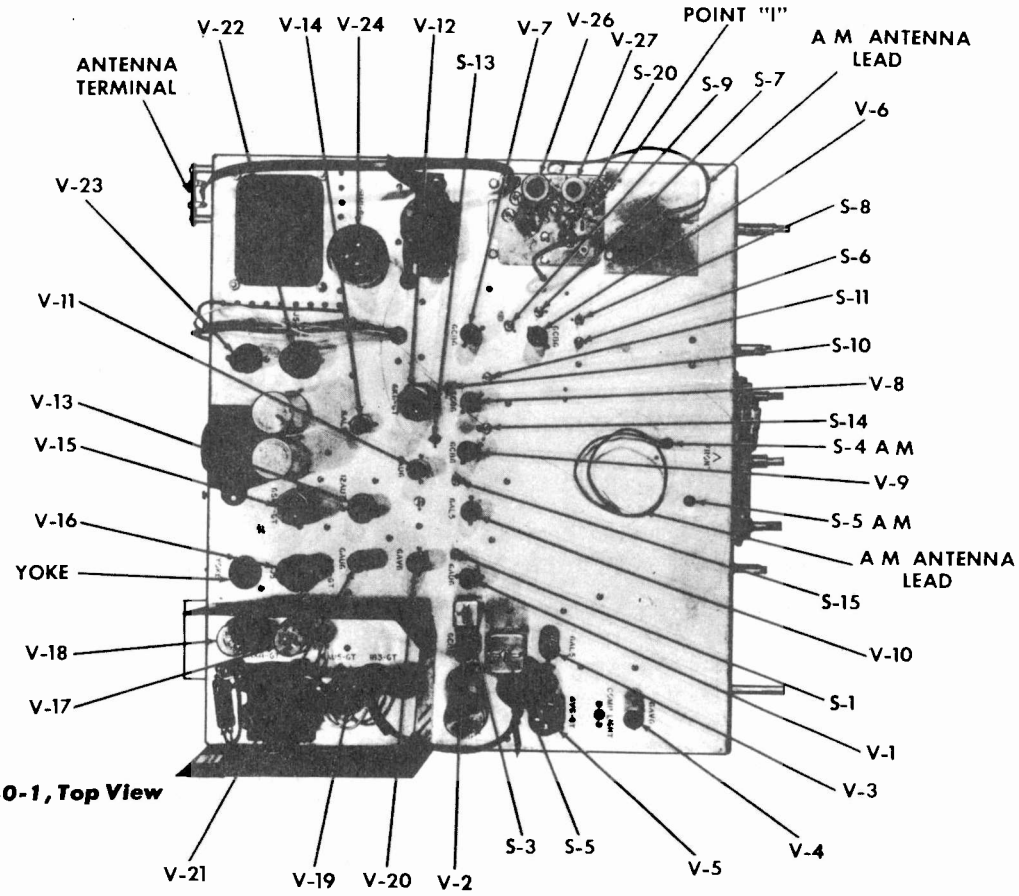

Fig. 9. Chassis 2940-1, Top View

PHILCO

The various models of Philco "B" and "C" line receivers (released to date of publication) use several different chassis as listed below.

MODEL	CODE	CHASSIS	TUNER PART NO.	PICTURE TUBE
22C4010	130	R181, D181, D182	76-7664-2	21WP4
22C4010	131	R181, D182	76-7664-2	21XP4
22C4010L	130	R181, D181, D182	76-7664-2	21WP4
22C4010L	131	R181, D182	76-7664-2	21XP4
22C4012	130	R181, D181	76-7664-2	21WP4
22C4012	131	R181, D181, D182	76-7664-2	21XP4
22C4014	131 130	R181, D182 R181, D181, D182	76-7664-2 76-7664-2	21XP4A 21WP4
22C4016	350	350	76-8946-2	21ZP4B
22C4016L	350	350	76-8946-2	21ZP4B
22C4119	300	300	76-8946-1	21XP4
22C4120	300	300	76-8946-1	21YP4A
22C4120L	300	300	76-8946-1	21YP4A
22C4122	130 131	R181, D181, D182 R181, D182	76-7664-2 76-7664-2	21ZP4B 21XP4A
22C4123	300	300	76-8946-1	21YP4A
22C4124	300 350	300 350	76-8946-1 76-8946-1	21YP4A 21ZP4B
22C4124L	350 300	350 300	76-8946-1 76-8946-2	21ZP4B 21ZP4B
22C4125	350	350	76-8946-2	21ZP4B
22C4125L	350	350	76-8946-2	21ZP4B
22C4310	300	300	76-8946-1	21YP4A
22C4310L	300	300	76-8946-1	21YP4A
22C4312	350	350	76-8946-2	21XP4A
22C4312L	350	350	76-8946-2	21ZP4B
24C6010	354	354	76-8946-2	24VP4A
24C6109	354	354	76-8946-2	24VP4A
24C6109L	354	354	76-8946-2	24VP4A
24C6110	354	354	76-8946-2	24VP4A
24C6110L	354	354	76-8946-2	24VP4A
24C6112	354	354	76-8946-2	24VP4A
24C6310	354	354	76-8946-2	24VP4A

Material on R-181 and D-181 is published in SUPREME "1954 Television Servicing Information" manual, pages 87 to 97. The differences between D-181 and D-182 deflection chassis are explained below. Information on Chassis 300 (and 301) is on pages 98 to 106, in this manual; while information on Chassis 350 and 354 is on pages 107 to 114. Look up the model you are servicing and refer to the correct chassis.

DEFLECTION CHASSIS D-182

Philco "B" line, code 131 television receivers employ two chassis, RF chassis R-181, and deflection chassis D-182. These chassis are the same as the code 130 chassis (R-181 with D-181), with the exception that an electrostatic focus type cathode ray tube and a different horizontal output transformer are employed. See Figure No. 1.

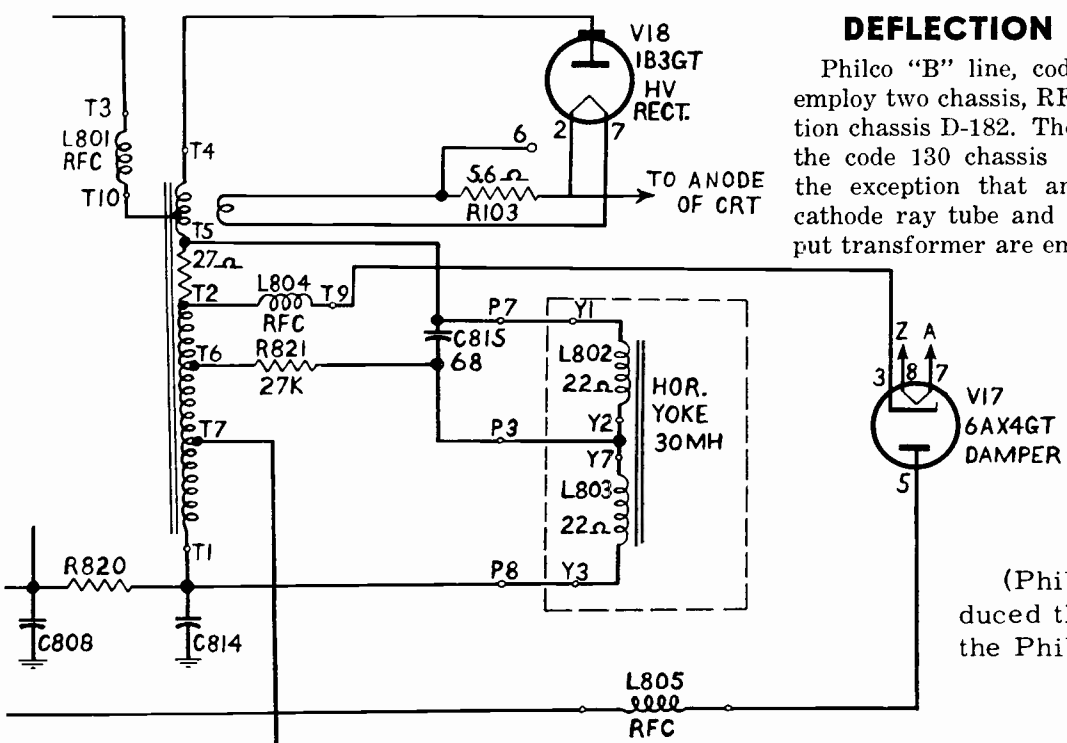

(Philco material is reproduced through the courtesy of the Philco Corp.)

FIGURE 1—HORIZONTAL OUTPUT TRANSFORMER CIRCUIT

PHILCO TELEVISION TV-300 AND TV-301 CHASSIS

THE TV-300 AND TV-301 DIFFERENCE

The TV-301 is similar to the TV-300, the difference being in the picture tube used and the shorting out of one resistor in the TV-300 to make the TV-301 chassis.

The TV-300 chassis uses a 21XP4A picture tube which is an electrostatic focus tube. When this tube is used the 27 ohm resistor in the high voltage transformer is necessary for proper electrical centering of the picture.

The TV-301 chassis uses a 21WP4A picture tube which is an electromagnetic focus picture tube. When this picture tube is used the 27 ohm resistor is shorted out and the chassis is called the 301.

The TV-300 receiver contains a 13 position incremental type VHF tuner, covering VHF channels 2 through 13 with a UHF position. Power and filament voltage for the UHF tuner-adapter are supplied through a switch built into the rear of the VHF tuner. The output of the VHF tuner is a 40 Mc., IF signal which is inductively coupled to three stagger tuned IF stages. A 1N64 crystal serves as the diode detector for the output of the IF stages.

The output of the video detector, a negative phase, composite-video detected signal, is fed through a single video amplifier to the cathode ray tube.

TELEVISION ALIGNMENT

General

The alignment procedure follows the general pattern of first checking the tuner response with an FM sweep generator and oscilloscope, comparing the response curve with that given in the manual, and aligning the tuner if necessary. After it is established that the tuner is in correct alignment, the video I-F channel is aligned by tuning each coil to its assigned pole frequency, using an AM signal, and then feeding in a sweep signal at the antenna terminals and retouching the I-F adjustments to obtain the desired pass band. Finally, the sound channel is aligned, using an AM signal, by tuning the sound take-off coil and the I-F and ratio-detector transformers.

The over-all response curve (r-f, i-f) of the circuits from the antenna terminals to the video detector, after the I-F stages have been aligned, should appear essentially the same, regardless of the channel under test. If not, the tuner should be aligned.

The video-carrier intermediate frequency is 45.75 mc., and the sound intermediate (intercarrier) frequency is 4.5 mc. Alignment of these circuits requires careful workmanship and good equipment. The following precautions must be observed:

1. There must be a good bond between the receiver chassis and the test equipment. This is most easily obtained by having the top of the workbench metallic. The receiver chassis should be placed tuner-side down on the bench. If the bench has no metallic top, the test equipment and chassis can be bonded by a strip of copper about 2 inches wide. The section of the chassis nearest the tuner should rest on the strip.
2. Do not disconnect the picture tube yoke, or speaker while the receiver is turned on.

HORIZONTAL OSCILLATOR ADJUSTMENT

1. Center horizontal hold control.
2. Adjust T-1 until the picture comes into sync.

TUNER OSCILLATOR ALIGNMENT

TABLE 1

AM GENERATOR: Connect to the receiver antenna-input terminals. (No matching network is required.) Use in modulated R-F output.

OSCILLOSCOPE: Connect the vertical-input lead, in series with a 1000-ohm resistor, to the mixer plate test point, TP-2. Connect the scope ground lead to the chassis, near TP-4.

RECEIVER CIRCUIT ALTERATIONS: Disconnect tuner AGC (white) lead from main chassis, and connect a 1.5-volt bias battery, with negative terminal to white lead from tuner, and positive terminal to chassis.

STEP	AM GENERATOR DIAL SETTING	RECEIVER TUNING	ADJUST	REMARKS
1	257 mc.	channel 13	TC-506 for zero beat on scope.	a. If regeneration occurs, increase bias; bias may be increased up to 4 or 5 volts, if necessary. b. Preset fine tuning control to center of its range.
2	251 mc.	channel 12	TC-507 for zero beat on scope.	
3	245 mc.	channel 11	TC-508 for zero beat on scope.	
4	239 mc.	channel 10	TC-509 for zero beat on scope.	
5	233 mc.	channel 9	TC-510 for zero beat on scope.	a. To adjust channel 8 use channel 9 tuning core, then recheck channel 9.
6	221 mc.	channel 7	TC-511 for zero beat on scope.	a. Repeat steps 1 thru 6 and readjust if necessary until channels are within 500 kc. of proper frequency.
7	129 mc.	channel 6	TC-512 for zero beat on scope.	
8	113 mc.	channel 4	TC-513 for zero beat on scope.	
9	101 mc.	channel 2	TC-514 for zero beat on scope.	

VIDEO I-F ALIGNMENT
TABLE 2

A.M. GENERATOR: Connect to mixer test point, TP-2, through a mixer jig, and adjust the generator for approximately 30% modulation at 400 cycles. Adjust the output of the generator during alignment to keep the output at the CRT cathode below 40 volts peak to peak.

SWEEP (FM) GENERATOR: After step 5 connect to antenna-input circuit through antenna-input matching network (see figure ?)

OSCILLOSCOPE: Connect vertical-input lead to pin No. 11 at the cathode ray tube.

PRESET: Contrast control full on. Channel selector to channel position No. 1.

BIAS: Apply 5.0 volts of negative bias into TP-1 (AGC system).

NOTE: I-F shield must be in place.

STEP	AM GENERATOR DIAL SETTING	SWEEP (FM) GENERATOR		ADJUST	REMARKS
		SWEEP DIAL SETTING	MARKER DIAL SETTING		
1	45.5 mc.			TT for maximum indication on scope.	The scope level must not be permitted to exceed 40 volts peak to peak or overloading will occur.
2	43.1 mc.			VC-1 for maximum indication on scope.	
3	42.7 mc.			T-2-IF for maximum indication on scope.	
4	45.0 mc.			T6-IF for maximum indication on scope.	
5	44.4 mc.			T3-IF for maximum indication on scope.	
6		Channel 4 (69 mc. with 6 mc. sweep width).	Run marker along curve checking against curve limits given in figure 6.	If necessary retouch TT, VC1, T2-IF, T6-IF, T5-IF.	Adjust carrier level with TT and T6 level curve with T-3. Position 42.5 mc. slope with VC-1 and T-2. CAUTION: Retouch only slightly.

TUNER BANDPASS ALIGNMENT — *See Table 3*

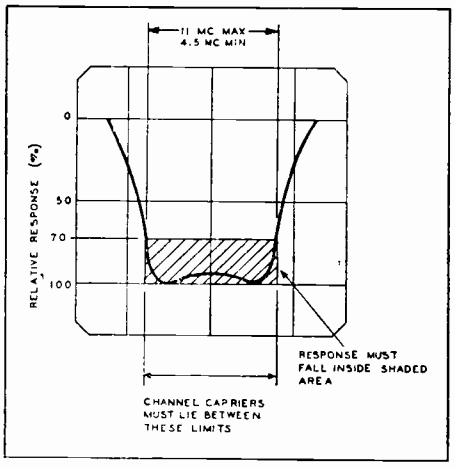

Fig. 2. Television tuner response curve, showing bandpass limits.

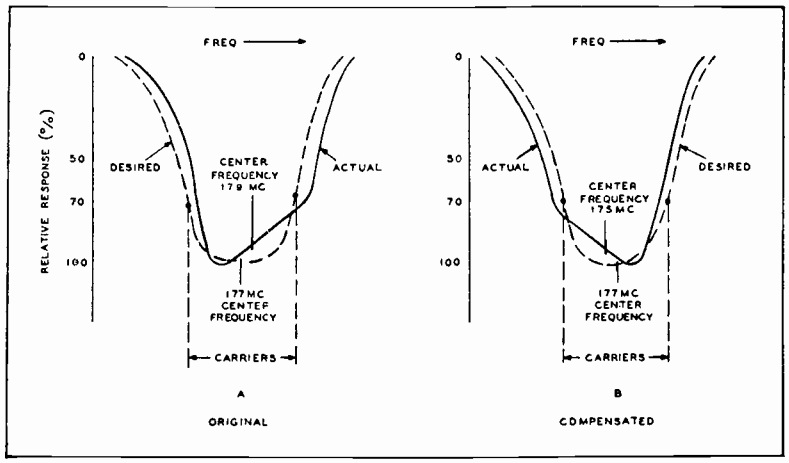

Fig. 3. Television tuner response curve, showing tracking compensation.

TUNER BANDPASS ALIGNMENT
TABLE 3

SWEEP (FM) GENERATOR: Connect to receiver antenna-input circuit through antenna-input matching network (see figure 1).

OSCILLOSCOPE: Same as in Chart 1.

RECEIVER CIRCUIT ALTERATIONS: Bias same as Chart 1. Disconnect the tuner coupling link leads and connect a 40- to 70-ohm carbon resistor across the open end of the lead from the tuner.

STEP	SWEEP (FM) GENERATOR		RECEIVER TUNING	ADJUST	REMARKS
	SWEEP DIAL SETTING	MARKER DIAL SETTING			
1	Channel 13 (213 mc., with 10-mc. sweep width.)	Set first to 210 mc. and not position of marker on response curve. Then set to 216 mc. and note position of marker on response curve.	Channel 13		Use oscilloscope gain as high as possible with respect to hum level and "bounce". Pips fix channel limits on curve. Response curve should be flat between limits (see figure 2). If not, proceed with step 2.
2	Channel 13	213 mc.	Channel 13	T-8 — WS2 counter-clockwise until single peak appears.	CAUTION: Care must be taken not to un screw core far enough to make it drop out of the coil.
3	Channel 13	213 mc.	Channel 13	T-15—WS3 until peak falls on 213-mc. marker.	It may be necessary to increase sweep-generator output.
4	Channel 7 (177 mc., with 10-mc. sweep width.)	Set first to 174 mc. and note position of marker on response curve. Set to 180 mc. and note position of marker on response curve.	Channel 7		Note curve with respect to tilt and center frequency. Curve should be centered in pass band and symmetrical. If not, proceed with step 5.
5	Channel 7	174 mc. & 180 mc.	Channel 7	VC-3 and VC-2 to obtain correct tilt on top of curve.	VC3 and VC2 compensate for the tuning effect of Channel 13 adjustment upon Channel 7. (See figure 3.)
6	Channel 13	213 mc.	Channel 13	Retouch T-15 of WS3 and T-8 — WS2 for symmetrical response, centered about 213-mc. marker.	To retouch, only turn cores slightly.
7	Channel 7	117 mc.	Channel 7	Repeat step 5.	Check response curve for correct center frequency and symmetry.
8				Repeat steps 6 and 7.	Repeat Channel 13 and Channel 7 adjustments, alternately, until favorable curves are obtained on both.
9	Channel 6 (85 mc., with 10-mc. sweep width.)	Set first to 82 mc. and note position of marker on response curve. Then set to 88 mc. and note position of marker on response curve.	Channel 6		Curve should be symmetrical and centered in pass band. If not, proceed with step 10.
10	Channel 6	85 mc.	Channel 6	T-14 of WS2 counter-clockwise until single peak appears.	CAUTION: Care must be taken not to unscrew core far enough to make it drop out of the coil.
11	Channel 6	85 mc.	Channel 6	T-21—WS3 until peak falls on 85-mc. marker.	It may be necessary to increase sweep-generator output.
12	Channel 6	85 mc.	Channel 6	T-27 — WS5 for maximum curve height and symmetry of single peak.	After adjusting TC501, recheck as in step 9. If necessary, reduce sweep-generator output to avoid overloading.
13	Channel 6	85 mc.	Channel 6	Retouch T-21 — WS3 and T-14 — WS2 for symmetrical response, centered about 85-mc. marker.	To retouch, only turn cores slightly.

JIGS AND ADAPTERS REQUIRED

Mixer Jig

Connections to the grid of the mixer tube may be made through the alignment jack provided for this purpose. To connect the generator to this point, a mixer-grid jig, Philco Part No. 45-1739, and a connecting cable, Philco Part No. 45-1635, may be used. As an alternate, a Philco alligator-clip adapter, Part No. 45-1636, with as short a ground lead as possible, may be used to connect the alignment jack. The ground lead should be connected as close as possible to the mixer tube. It is essential that the signal-generator output lead be terminated with a 68-ohm resistor (carbon), so that regeneration, caused by connection of the lead to the mixer, is held to a minimum.

Antenna-Input Matching Network

An impedance-matching network for coupling the signal generator to the antenna input terminals of the receiver is shown in figure 1.

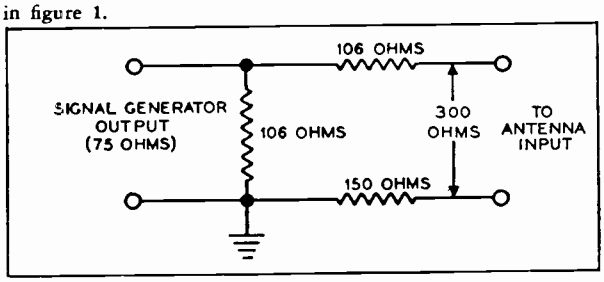

Fig. 1. Antenna-Input Matching Network.

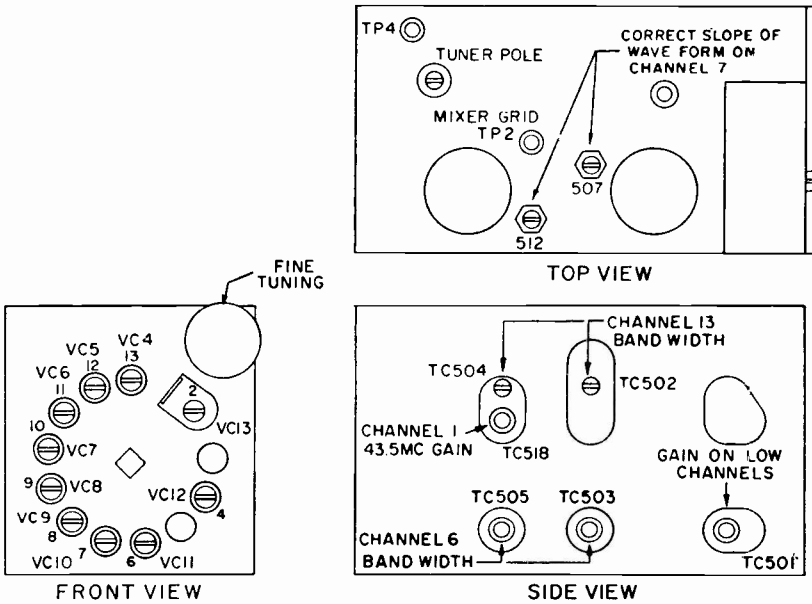

Fig. 4. Tuner layout showing locations of adjustments.

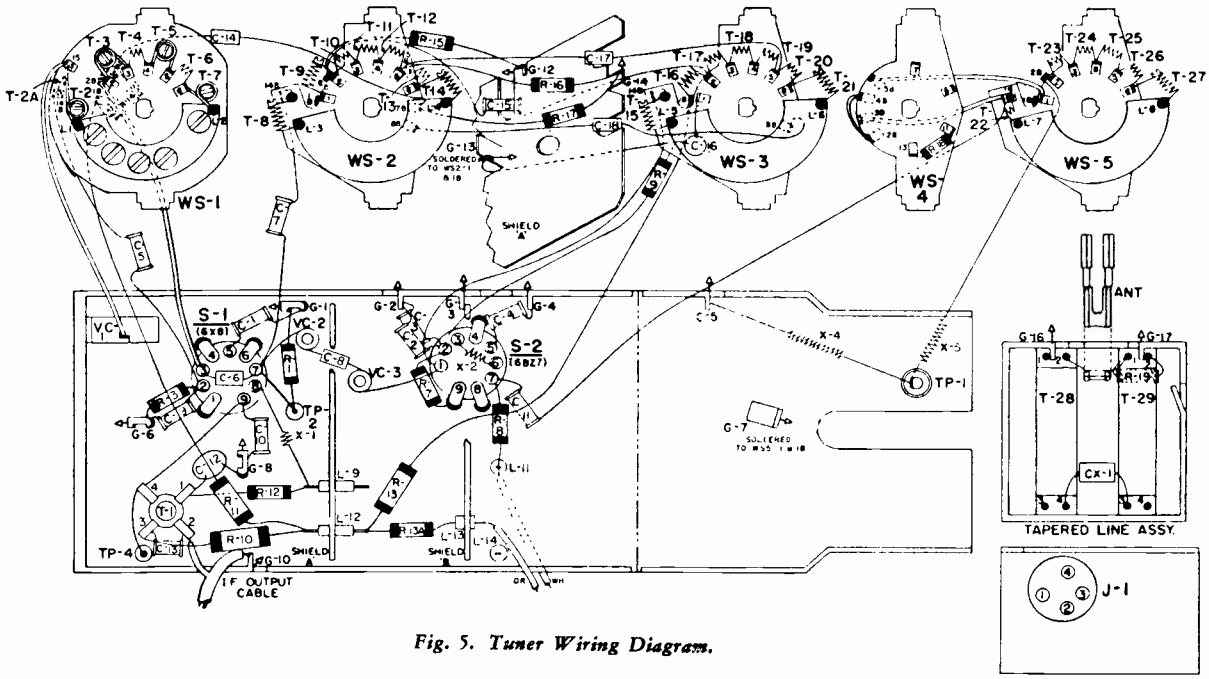

Fig. 5. Tuner Wiring Diagram.

SOUND ALIGNMENT
TABLE 4

A.M. GENERATOR: Connect the "hot" lead through a 2200 ohm resistor to the junction of C-24, X3 and the xtal det. Adjust generator for 400v. modulation at approximately 30% modulation.

VOLTMETER: Use V.T.V.M. on 20,000-ohms-per-volt voltmeter. Connect through a crystal probe to pin No. 11 of the picture tube in step 1 and to pin No. 3 of the 6W6 audio output tube in the remainder of the steps.

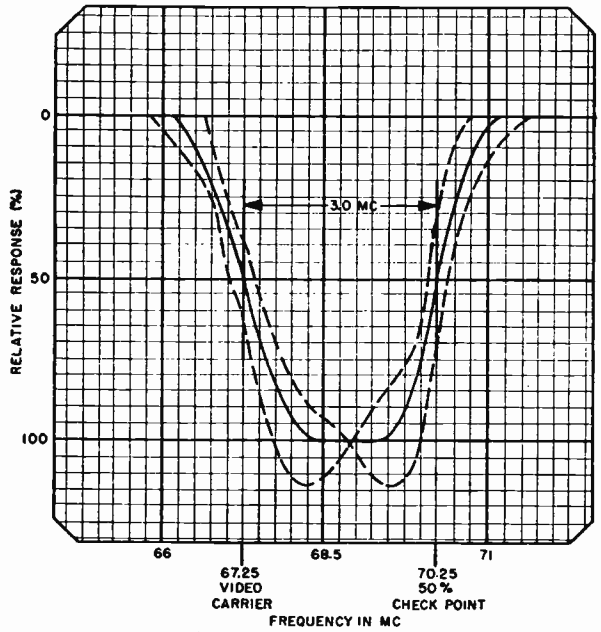

Fig. 6. Over-all R-F, I-F response curve, showing tolerance limits.

STEP	AM GENERATOR DIAL SETTING	ADJUST	REMARKS
1	4.5 mc. modulated	T7-IF for minimum indication.	Voltmeter through xtal probe. Plate of video amplifier.
2	4.5 mc. modulated	T5 top for maximum indication.	a. Volume control full on. b. Voltmeter thru xtal probe to 6W6 pin No. 3. c. Keep generator level low to prevent overload.
3	4.5 mc. modulated	T5 bottom for maximum indication.	
4	4.5 mc. modulated	T4-IF for maximum indication.	

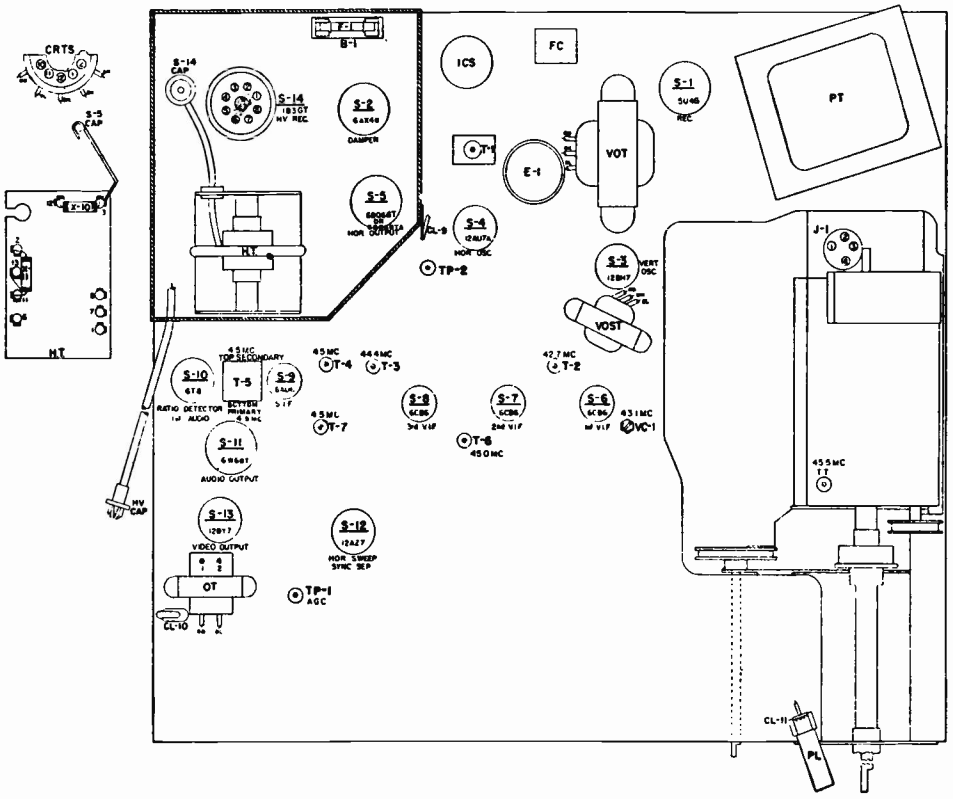

Fig. 7. Base Layout — Top View — TV-300 Chassis.

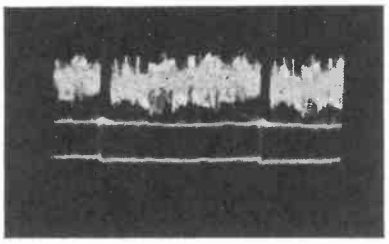

Fig. 8. Composite Signal, Pin 2 of 12BY7, 6 volts, 60 c.p.s.

OSCILLOSCOPE WAVEFORM PATTERN — TV-300

These waveforms were taken with the receiver adjusted for an approximate peak-to-peak output of 6 volts at the video detector. The voltages given with the waveforms are approximate peak-to-peak values. The frequencies shown are those of the waveforms — not the sweep rate of the oscilloscope. The waveforms were taken with an oscilloscope having good high-frequency response. With oscilloscopes having poor high-frequency response, the sharp peaks of the horizontal waveforms will be more rounded than those shown, and the peak-to-peak voltages will differ from those shown.

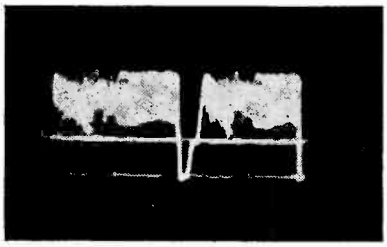

Fig. 9. Composite Signal, Pin 2 of 12BY7, 6 volts, 15,750 c.p.s.

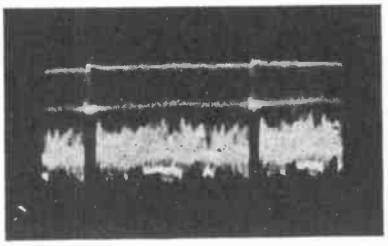

Fig. 10. Video Amplifier Plate, 83 volts, 60 c.p.s.

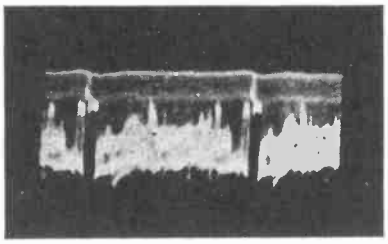

Fig. 11. Sync Separator Grid, Pin 2, 90 volts, 60 c.p.s.

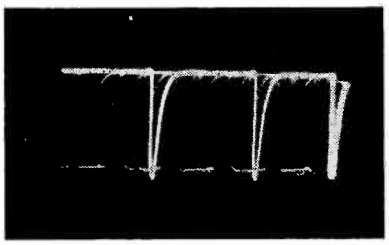

Fig. 12. Sync Separator Plate, Pin 1, 30 volts, 15,750 c.p.s.

Fig. 13. Vertical-Oscillator Grid, Pin 7, 140 volts, 60 c.p.s.

Fig. 14. Vertical-Output Grid, Pin 2, 72 volts, 60 c.p.s.

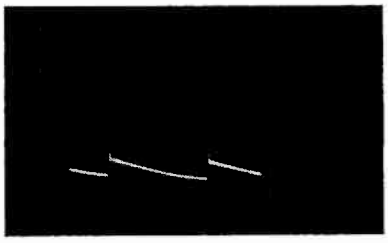

Fig. 15. Vertical-Output Plate, Pin 9, 900 volts, 60 c.p.s.

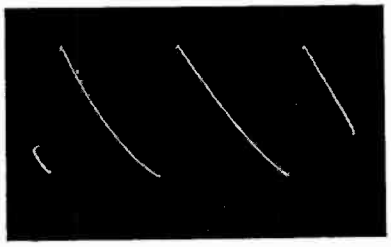

Fig. 16. Phase Comparer, Pin 6, 7 volts, 15,750 c.p.s.

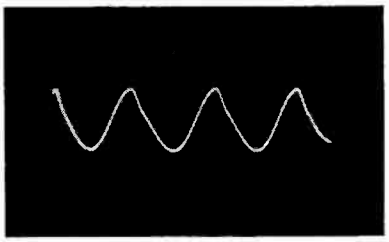

Fig. 17. Horizontal Oscillator, junction of L800 and R806, 43 volts, 15,750 c.p.s.

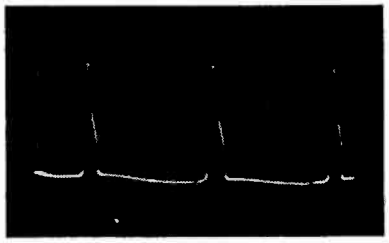

Fig. 18. Horizontal-Oscillator Cathode, Pins 3 and 8, 18 volts, 15,750 c.p.s.

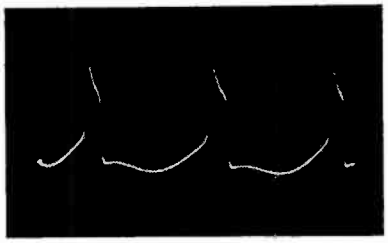

Fig. 19. Horizontal-Oscillator Grid, Pin 2, 40 volts, 15,750 c.p.s.

Fig. 20. Horizontal-Output Grid, Pin 5, 120 volts, 15,750 c.p.s.

PHILCO Schematic TV-300 Chassis

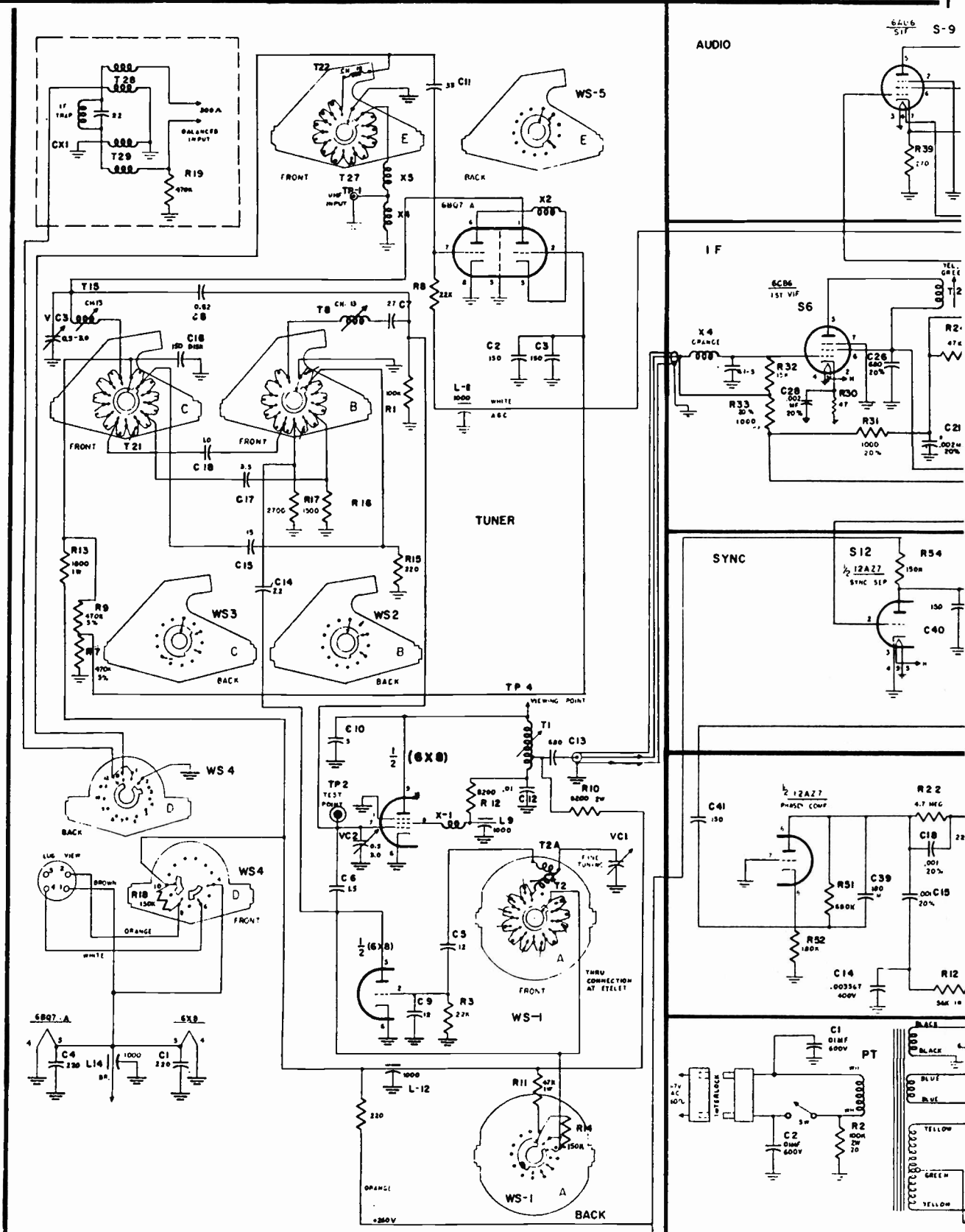

Voltage readings taken with a Philco Model No. 7001: VTVM. All capacity values in micro-microfarads unless otherwise noted. Direction of arrow through control arms indicates clockwise rotation. * All capacitors so marked are of ceramic disc type. Capacitors marked GMV have tolerance of —0% +100%. Letters on tuner switch wafers read from front to back of tuner. All resistors are ½ watt 10% unless otherwise noted. Resistance values noted for coil and transformer windings are D.C. readings.

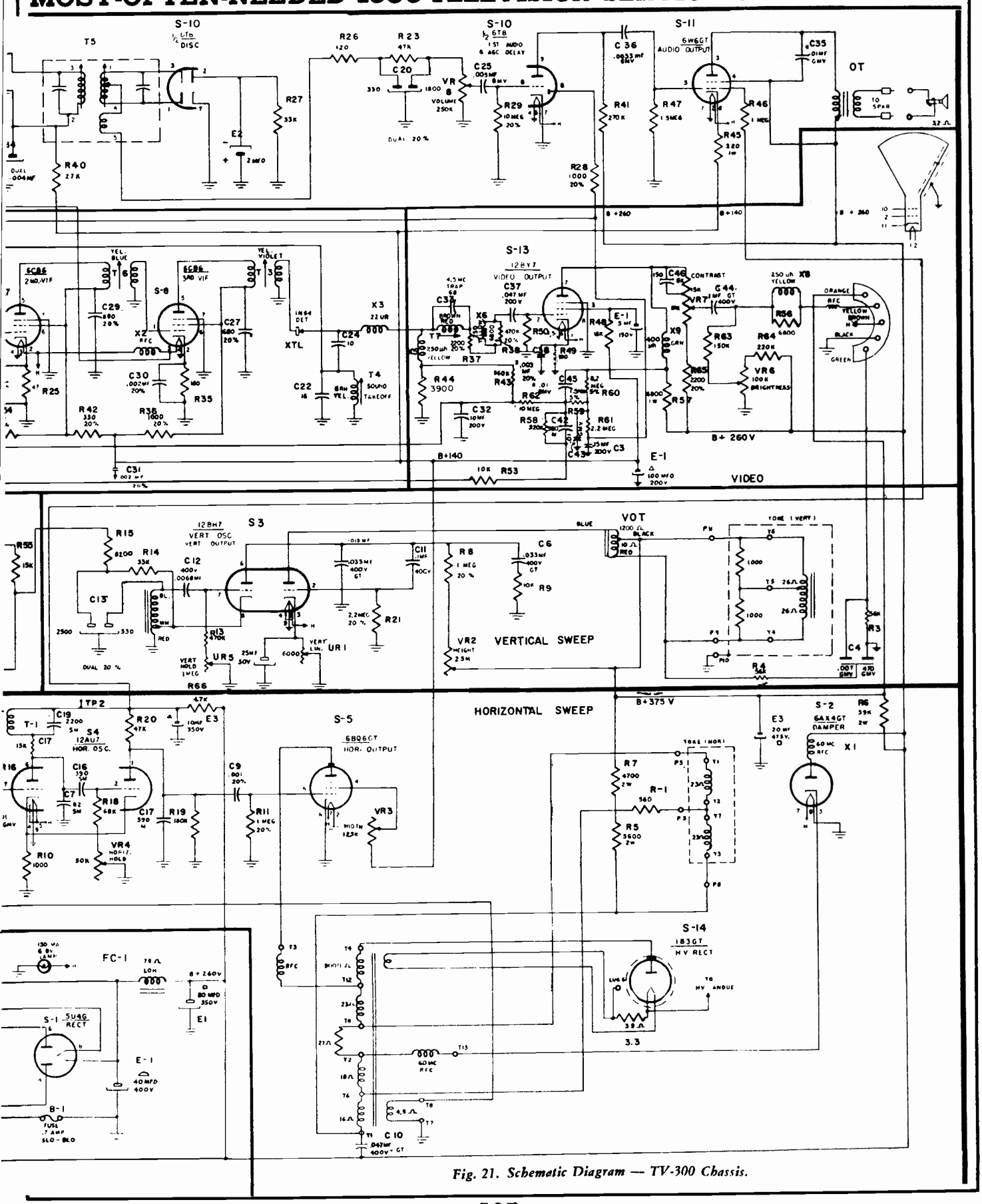

Fig. 21. Schematic Diagram — TV-300 Chassis.

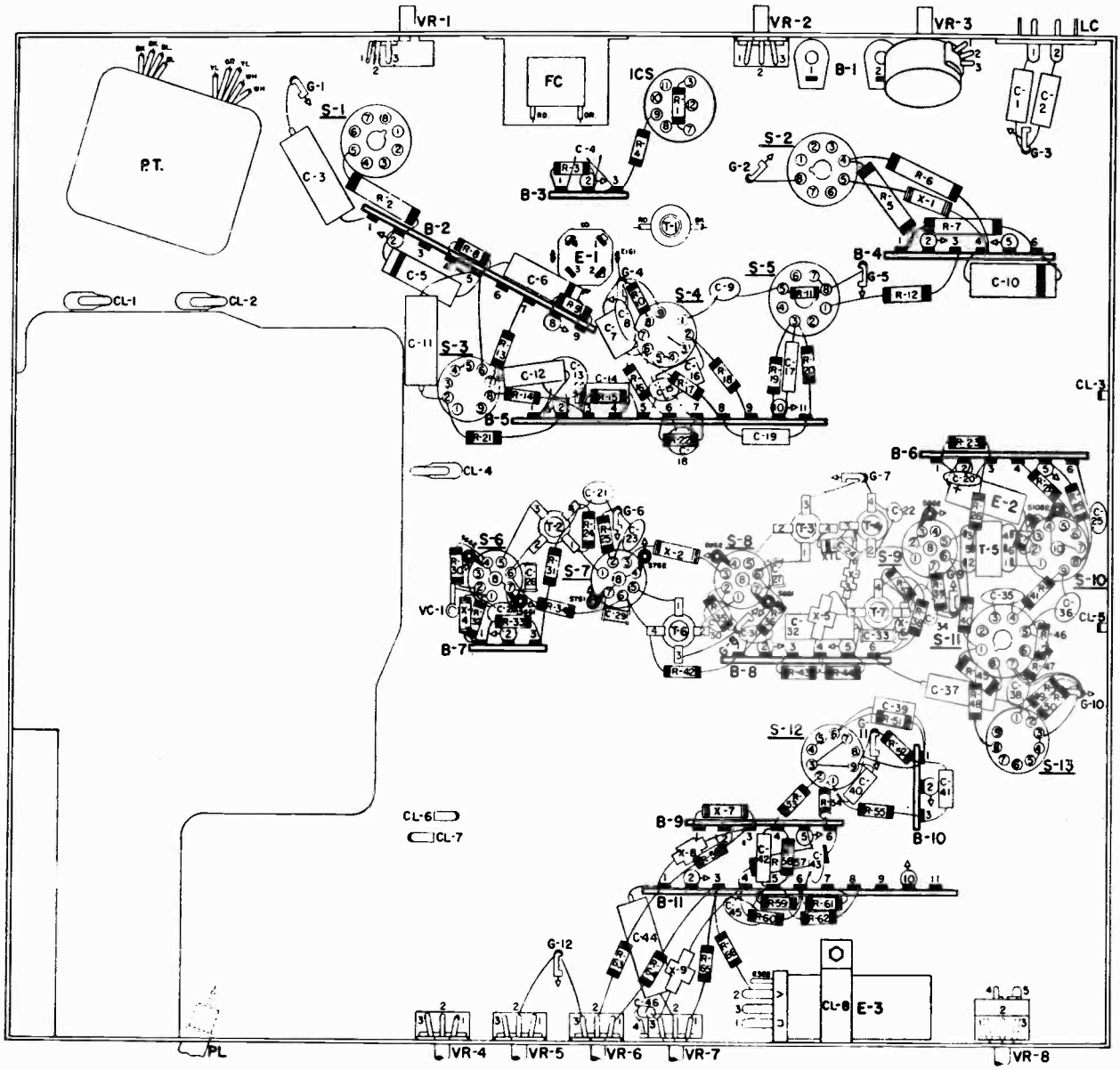

Fig. 22. Wiring Diagram, Bottom View — TV-300.

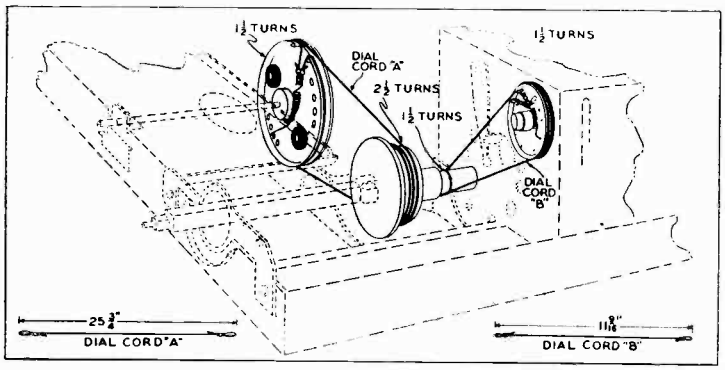

Fig. 23. Dial Cord Stringing Arrangement.

PHILCO TELEVISION TV-350 AND TV-354 CHASSIS

CIRCUIT DESCRIPTION OF TV-354

The TV-354 is the same as the TV-350 with the following exceptions. The vertical output tube has been changed from a 6S4 to a 6CM6. The horizontal output tube from a 6BQ6 to a 6CD6. The damper tube in the TV-350 is a 6AX4, while the damper tube in the TV-354 is a 6AU4GT. The power supply in the TV-354 contains two 5U4G rectifiers. These changes have been made in the TV-354 to accommodate the larger picture tube.

HORIZONTAL-OSCILLATOR ADJUSTMENT

To adjust the horizontal-oscillator circuit, tune in a station and proceed as follows:

1. Reduce the width of the picture until approximately 1 inch of blank screen appears at the right-hand and left-hand sides of the picture.
2. Increase the BRIGHTNESS control setting until the blanking becomes visible. This will appear as a dark vertical bar on each side of the picture.
3. Connect a .1 mf condenser from the test point to ground. (The plate side of the horizontal ringing coil, T1, is connected to the test point.)
4. Set the HORIZONTAL HOLD control to the approximate center of its mechanical rotation.
5. Adjust the HORIZONTAL HOLD CENTERING control until equal portions of the blanking bar appear on both sides of the picture.
6. Remove the .1 mf condenser from the test point.
7. Adjust the horizontal ringing coil, T1, until equal portions of the blanking bar again appear on both sides of the picture.
8. Rotate the HORIZONTAL HOLD control through its range. The picture should fall out of sync on both sides of the center of its rotation. If the picture does not fall out of sync on both sides, readjust the HORIZONTAL HOLD CENTERING control.
9. Rotate the HORIZONTAL HOLD control through its range, and observe the number of diagonal blanking bars that appear just before the picture pulls into sync. The pull-in should occur with from 1 to 2 diagonal bars when the sync position is approached from either direction. If proper pull-in is not obtained, repeat the above procedure.

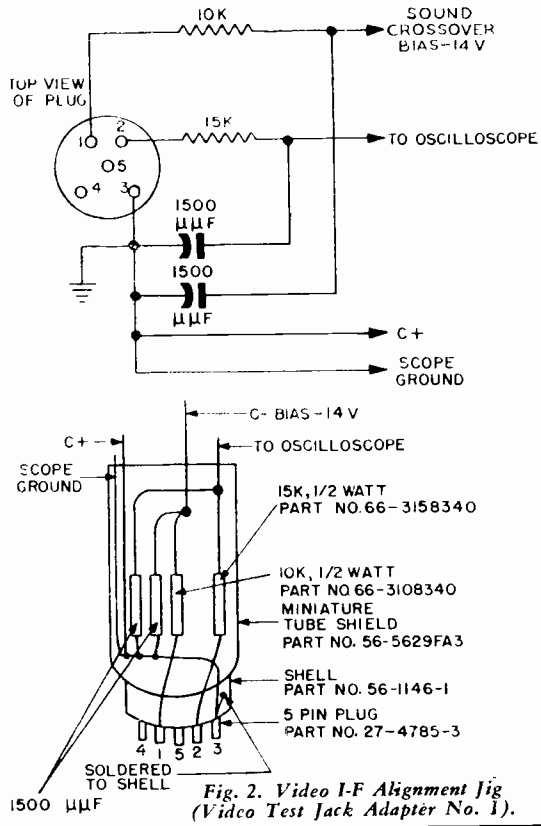

Fig. 2. Video I-F Alignment Jig (Video Test Jack Adapter No. 1).

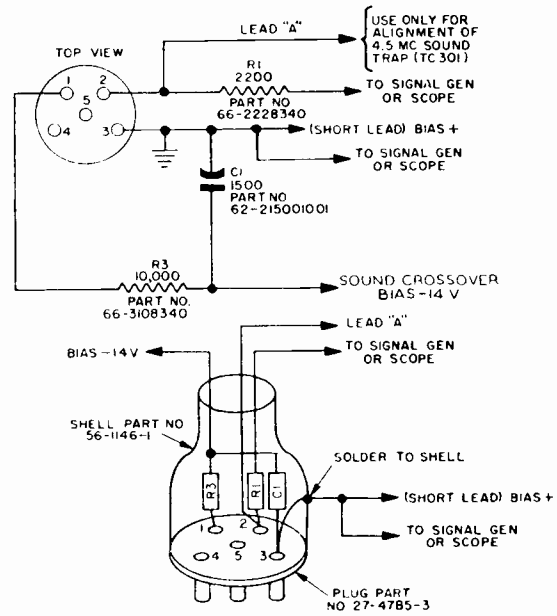

Fig. 3. Sound I-F Input Alignment Jig (Video Test Jack Adapter No. 2).

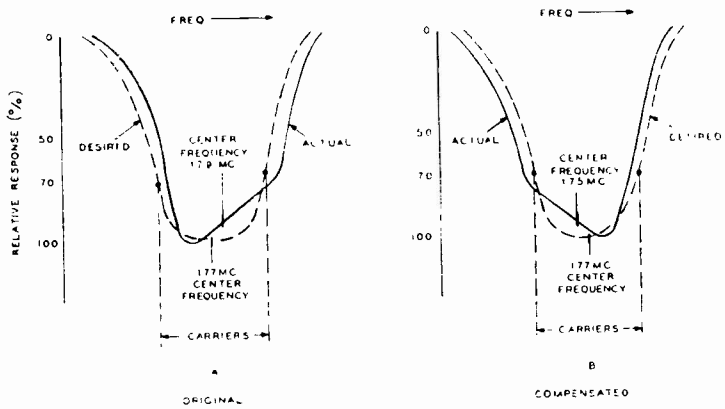

Fig. 5. Television tuner response curve, showing tracking compensation.

TUNER OSCILLATOR ALIGNMENT
TABLE NO. 1

AM GENERATOR: Connect to receiver antenna-input terminals. (No matching network is required.) Use unmodulated r-f output.

OSCILLOSCOPE: Connect the vertical-input lead, in series with a 1000-ohm resistor, to the mixer grid test point. Connect the scope ground lead to the chassis, near the test point.

RECEIVER CIRCUIT ALTERATIONS: Disconnect tuner a-g-c (white) lead from main chassis, and connect a 1.5 volt bias battery, with negative terminal to white lead from tuner, and positive terminal to chassis.

STEP	AM GENERATOR DIAL SETTING	RECEIVER TUNING	ADJUST	REMARKS
1	257 mc.	channel 13	VC4 for zero beat on scope.	a. If regeneration occurs, inject bias; bias may be increased up to 3 volts, if necessary at pin 1 video test jack — TS1. b. Preset fine tuning adjustment so that it is in the middle of its range.
2	251 mc.	channel 12	VC5 for zero beat on scope.	
3	245 mc.	channel 11	VC6 for zero beat on scope.	
4	239 mc.	channel 10	VC7 for zero beat on scope.	
5	233 mc.	channel 9	VC8 for zero beat on scope.	
6	227 mc.	channel 8	VC9 for zero beat on scope.	
7	221 mc.	channel 7	VC10 for zero beat on scope.	
8	64.5 mc.	channel 6	VC11 for zero beat on scope.	2nd harmonic gives 129 mc.
9	113 mc.	channel 4	VC12 for zero beat on scope.	
10	101 mc.	channel 2	VC13 for zero beat on scope.	

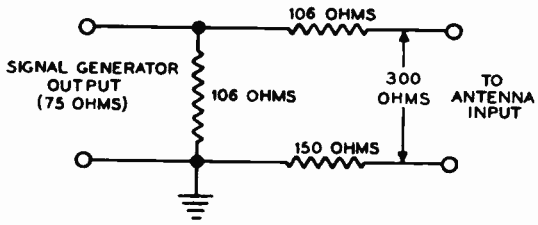

Fig. 1. Antenna-Input matching network.

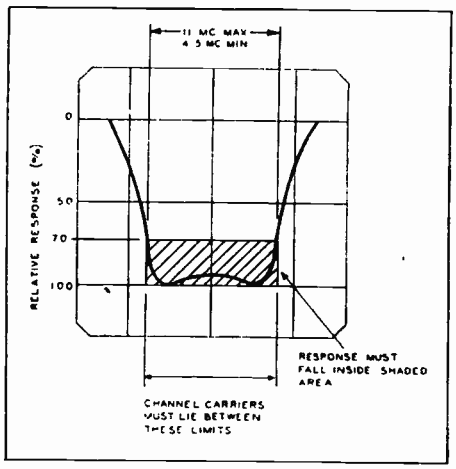

Fig. 4. Television tuner response curve, showing bandpass limits.

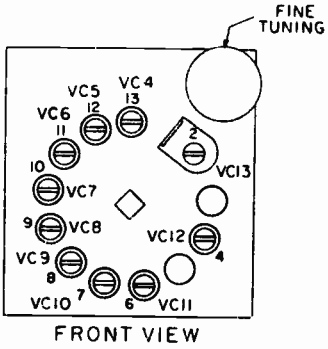

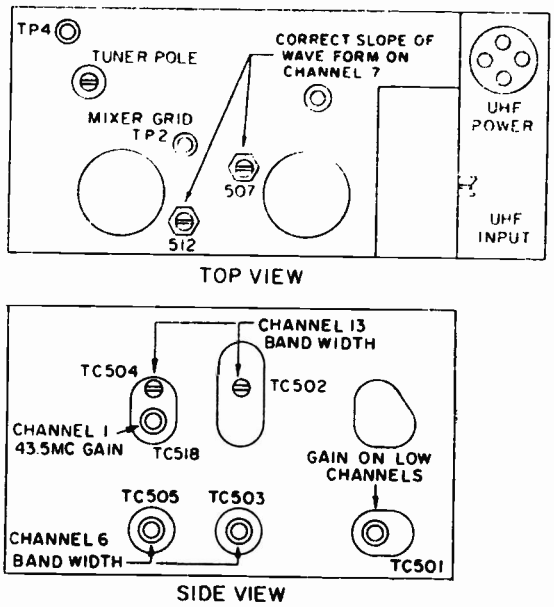

Fig. 6. Tuner Layout.

TUNER BANDPASS ALIGNMENT
TABLE NO. 2

SWEEP (FM) GENERATOR: Connect to antenna-input circuit through antenna-input matching network (See figure 1).

OSCILLOSCOPE: Connect the vertical-input lead, in series with a 1000-ohm resistor, to the mixer plate test point, TP4. Connect scope ground lead to the chassis, near TP4.

RECEIVER CIRCUIT ALTERATIONS: Disconnect tuner a-g-c (white) lead from main chassis, and connect a 1.5 volt bias battery, with negative terminal to white lead from tuner, and positive terminal to chassis. Disconnect tuner link from terminal board, B-9, and connect a 40 to 70-ohm carbon resistor across the link.

STEP	SWEEP (FM) GENERATOR		RECEIVER TUNING	ADJUST	REMARKS
	SWEEP DIAL SETTING	MARKER DIAL SETTING			
1	channel 13 (213 mc. with 10-mc. sweep width.)	Set first to 210 mc. and note position of marker on response curve. Then set to 216 mc. and note position of marker on response curve.	channel 13		Use oscilloscope gain as high as possible with respect to hum level and "bounce". Pips fix channel limits on curve. Response curve should be flat between limits (see fig. 5). If not, proceed with step 2.
2	channel 13	213 mc.	channel 13	TC502 counterclockwise until single peak appears.	CAUTION: Care must be taken not to unscrew core far enough to make it drop out of the coil.
3	channel 13	213 mc.	channel 13	TC504 until peak falls on 213 mc. marker.	It may be necessary to increase sweep-generator output.
4	channel 6 (85 mc. with 10-mc. sweep width.)	Set first to 82 mc. and note position of marker on response curve. Then set to 88 mc. and note position of marker on response curve.	channel 6		Curve should be symmetrical and centered in pass band. If not, proceed with step 5.
5	channel 6	85 mc.	channel 6	TC503 counterclockwise until single peak appears.	CAUTION: Care must be taken not to unscrew core far enough to make it drop out of the coil.
6	channel 6	85 mc.	channel 6	TC505 until peak falls on 85 mc. marker.	It may be necessary to increase sweep-generator output.
7	channel 6	85 mc.	channel 6	TC503 for maximum curve height and symmetry of single peak.	After adjusting TC503, recheck as in step 4. If necessary, reduce sweep-generator output to avoid overloading.
8	channel 6	85 mc.	channel 6	Retouch TC503 and TC505 for symmetrical response, centered about 85 mc. marker.	To retouch, only turn cores slightly.
9	channel 1 (UHF)	44 mc.	channel 1 (UHF)	Retouch TC503 and TC505 for symmetrical response centered about 44 mc.	After this adjustment recheck channel 6 and be sure it is within limits.

NOTE: On channel 7, observe the tilt and center frequency of the response curve. The curve should be centered on the pass band and should be symmetrical. If it is not symmetrical, and appears unbalanced, as in figure 6, adjust C507 and C512 (figure 5) to obtain a response curve which is in the mirror image (tilt in the opposite direction) of the original: for example, if channel 7 response curve appears as in figure 6A, adjust C507 and C512 until the curve appears as in figure 7B. This adjustment over-compensates to make allowance for the effect of channel 13 adjustments upon channel 7 response.

VIDEO I-F ALIGNMENT

AM GENERATOR: Connect to mixer test point, TP2, through a mixer jig, and adjust the generator for approximately 30 percent modulation at 400 cycles. Adjust the output of the generator during alignment, to keep the output at the second detector below 4 volt, peak to peak.

SWEEP (FM) GENERATOR: After step 7, connect to antenna-input circuit through antenna input matching network. (See figure 1.)

OSCILLOSCOPE: Connect the vertical-input lead to the 15K resistor of the video i-f alignment jig. Connect scope ground lead to the ground lead of the jig. Plug jig into TS1.

PRESET: Contrast and Brightness controls fully counterclockwise, and channel selector to channel 4. Adjust AGC switch to normal position.

BIAS: Apply —14 volts of negative bias to pin 1 of video i-f alignment jig; ground positive side of bias supply to pin 3 of jig. (See figure 2.)

NOTE: If the i-f shield has been removed for repairs, it must be replaced before proceeding with the alignment.

VIDEO I-F ALIGNMENT (Continued)
TABLE NO. 3

STEP	AM GENERATOR DIAL SETTING	SWEEP (FM) GENERATOR		ADJUST	REMARKS
		SWEEP DIAL SETTING	MARKER DIAL SETTING		
1	47.25	not used	not used	VC1 for minimum indication on scope.	It is necessary to keep the generator output sufficiently high that a null indication may be observed on the oscilloscope; however, avoid overloading of the receiver by excessive signal.
2	41.25	not used	not used	VC2 for minimum indication on scope.	
3	45.4	not used	not used	T1 for maximum indication on scope.	Adjust the output of the AM generator, to keep the output at the second detector below 4 volt, peak to peak. (For convenience, the oscilloscope may be calibrated for this purpose beforehand.)
4	45.4	not used	not used	T2 for maximum indication on scope.	
5	43.0	not used	not used	VC3 for maximum indication on scope.	
6	42.7	not used	not used	T3 for maximum indication on scope.	
7	44.4	not used	not used	T4 for maximum indication on scope.	
8	not used	channel 4 (69 mc., with 6-mc. sweep width)	Run marker along curve, checking against the curve limits given in fig. 7.	If necessary, retouch T1, T2, T3, & T4 as directed in REMARKS column. CAUTION: Do not touch settings of VC1 and VC2.	Set Fine Tuning Cam to reference point previously made in step 1 of Table 1. If response curve does not fall within limits shown in fig. 7, retouch T1 & T2 for proper level of curve at video carrier frequency; adjust T4 to level top of curve and T3 for proper slope of low-frequency side of curve. CAUTION: To retouch, only turn the adjustments slightly, particularly T2.

SOUND IF ALIGNMENT

AM GENERATOR: Connect "hot" lead through a 2200 ohm resistor to pin 2 of TS1, using the video i-f alignment jig. Connect ground lead of generator to ground lead of jig.

VOLTMETER: Use v.t.v.m. or 20,000 ohms-per-volt voltmeter. Connect to sound test point.

OSCILLOSCOPE: Connect through crystal probe to cathode (pin 11) of picture tube.

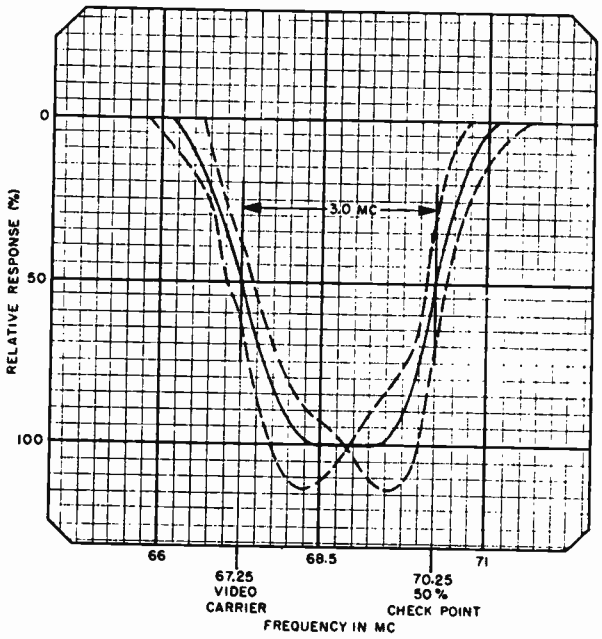

Fig. 7. Over-all R-F, I-F response curve, showing tolerance limits.

STEP	AM GENERATOR DIAL SETTING	ADJUST	REMARKS
1	4.5 mc.	T7 for maximum indication on voltmeter.	Remove 1st video i-f tube, and adjust the volume control for moderate speaker output.
2	4.5 mc.	T5 primary (bottom of T5) for maximum indication on voltmeter.	
3	4.5 mc.	T5 secondary (top of T5) for maximum indication on voltmeter and minimum speaker output.	The point of maximum meter indication for TC5 should also be the point of minimum speaker output.
4	4.5 mc.	T8 for minimum indication as view on the oscilloscope.	
5	use station signal	T5 primary (bottom of T5) for minimum AM (noise or buzz), using speaker output for indication.	Replace 1st video i-f tube, and tune in a station, setting fine tuning control to obtain a crisp picture, with a small amount of beat.

OSCILLOSCOPE WAVEFORM PATTERNS

These waveforms were taken with the receiver adjusted for an approximate peak-to-peak output of 3.5 volts at the video detector. The voltages given with the waveforms are approximate peak-to-peak values. The frequencies shown are those of the waveforms — not the sweep rate of the oscilloscope. The waveforms were taken with an oscilloscope having good high-frequency response. With oscilloscopes having poor high-frequency response, the sharp peaks of the horizontal waveforms will be more rounded than those shown, and the peak-to-peak voltages will differ from those shown.

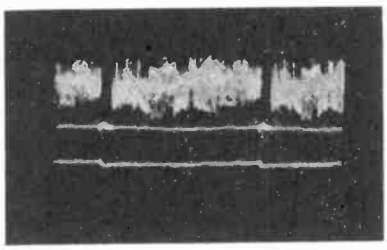

Fig. 8. Video Detector Output, Pin 2 of TS1, 3.5 volts, 60 c.p.s.

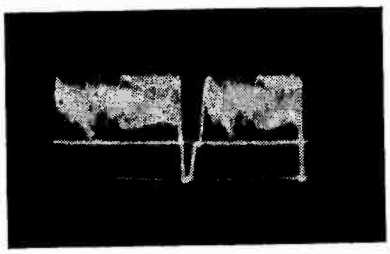

Fig. 9. Video Detector Output, Pin 2 of TS1, 3.5 volts, 15,750 c.p.s.

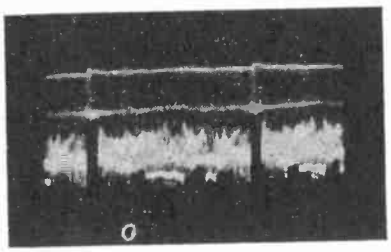

Fig. 10. Video Amplifier Plate, Pin 7, 83 volts, 60 c.p.s.

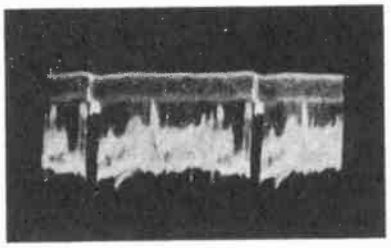

Fig. 11. Sync Separator Grid, Pin 7, 38 volts, 60 c.p.s.

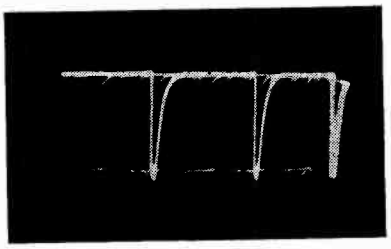

Fig. 12. Sync Separator Plate, Pin 5, 41 volts, 15,750 c.p.s.

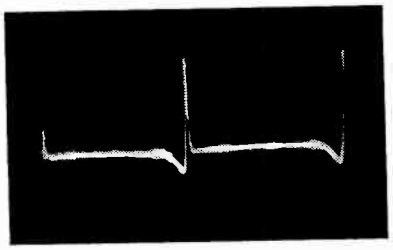

Fig. 13. Vertical-Oscillator Grid, Pin 2, .34 volts, 60 c.p.s.

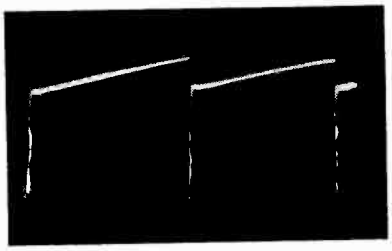

Fig. 14. Vertical-Output Grid, Pin 6, 80 volts, 60 c.p.s.

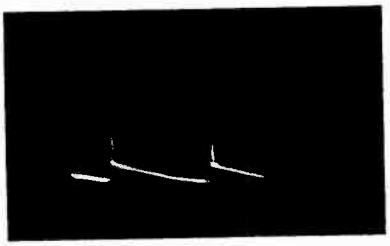

Fig. 15. Vertical Output Plate, Pin 9, 1100 volts, 60 c.p.s.

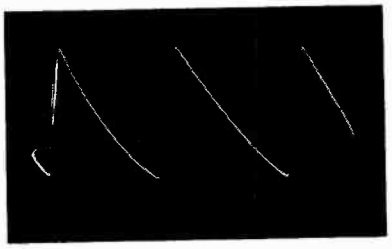

Fig. 16. Phase Comparer, Pin 2, 11 volts, 15,750 c.p.s.

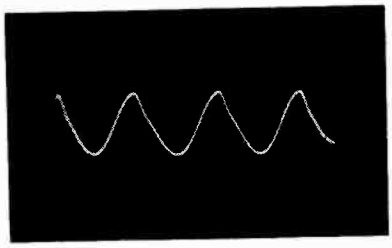

Fig. 17. Horizontal Oscillator, 43 volts, 15,750 c.p.s. test point.

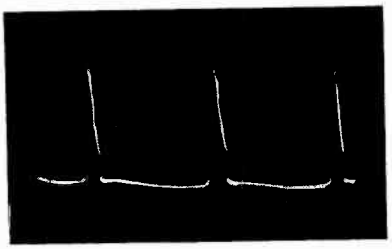

Fig. 18. Horizontal-Oscillator Cathode, Pins 3 and 8, 18 volts, 15,750 c.p.s.

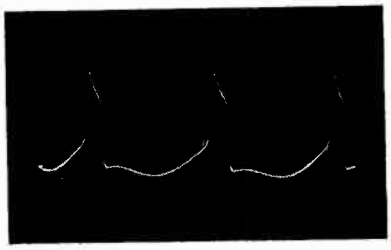

Fig. 19. Horizontal-Oscillator Grid, Pin 2, 65 volts, 15,750 c.p.s.

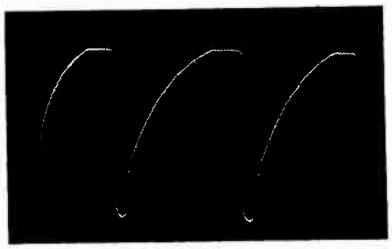

Fig. 20. Horizontal-Output Grid, Pin 5, 160 volts, 15,750 c.p.s.

The TV-354 is the same as the TV-350 with the following exceptions. The vertical output tube has been changed from a 6S4 to a 6CM6. The horizontal output tube from a 6BQ6 to a 6CD6. The damper tube in the TV-350 is a 6AX4, while the damper tube in the TV-354 is a 6AU4GT. The power supply in the TV-354 contains two 5U4G rectifiers. These changes have been made in the TV-354 to accommodate the larger picture tube.

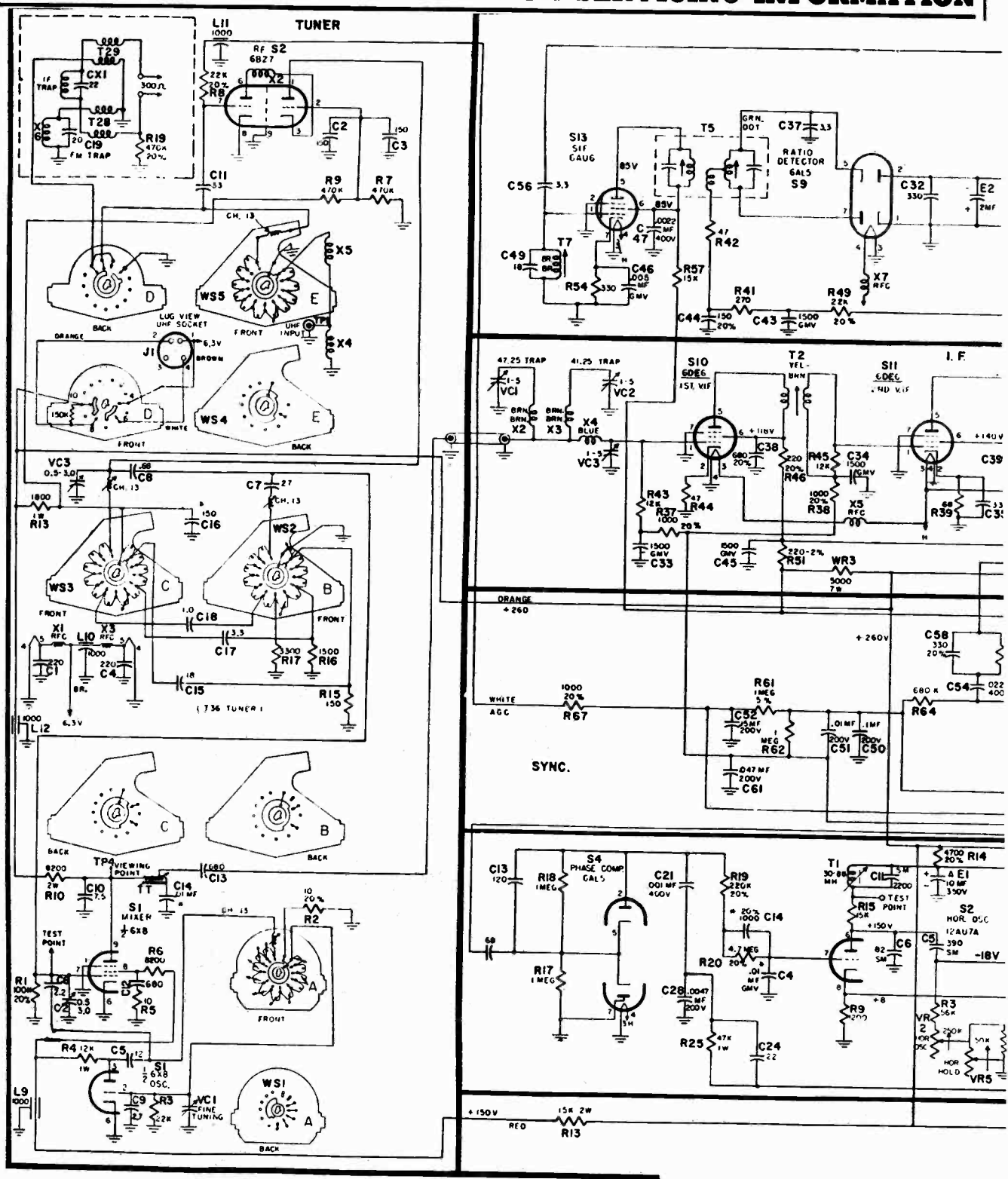

Voltage readings taken with a Philco Model No. 7001: VTVM. All capacity values in micro-microfarads unless otherwise noted. Direction of arrow though control arms indicates clockwise rotation. * All capacitors so marked are of ceramic disc type. Capacitors marked GMV have tolerance —0% +100%. Letters on tuner switch wafers read from front back of tuner. All resistors are ½ watt 10% unless otherwise noted. Resistance values noted for coil and transformer windings are D.C. readings. Mica and ceramic capacitors are ±10% unless otherwise noted.

Fig. 25. Schematic D

PHILCO Schematic TV-350 Chassis

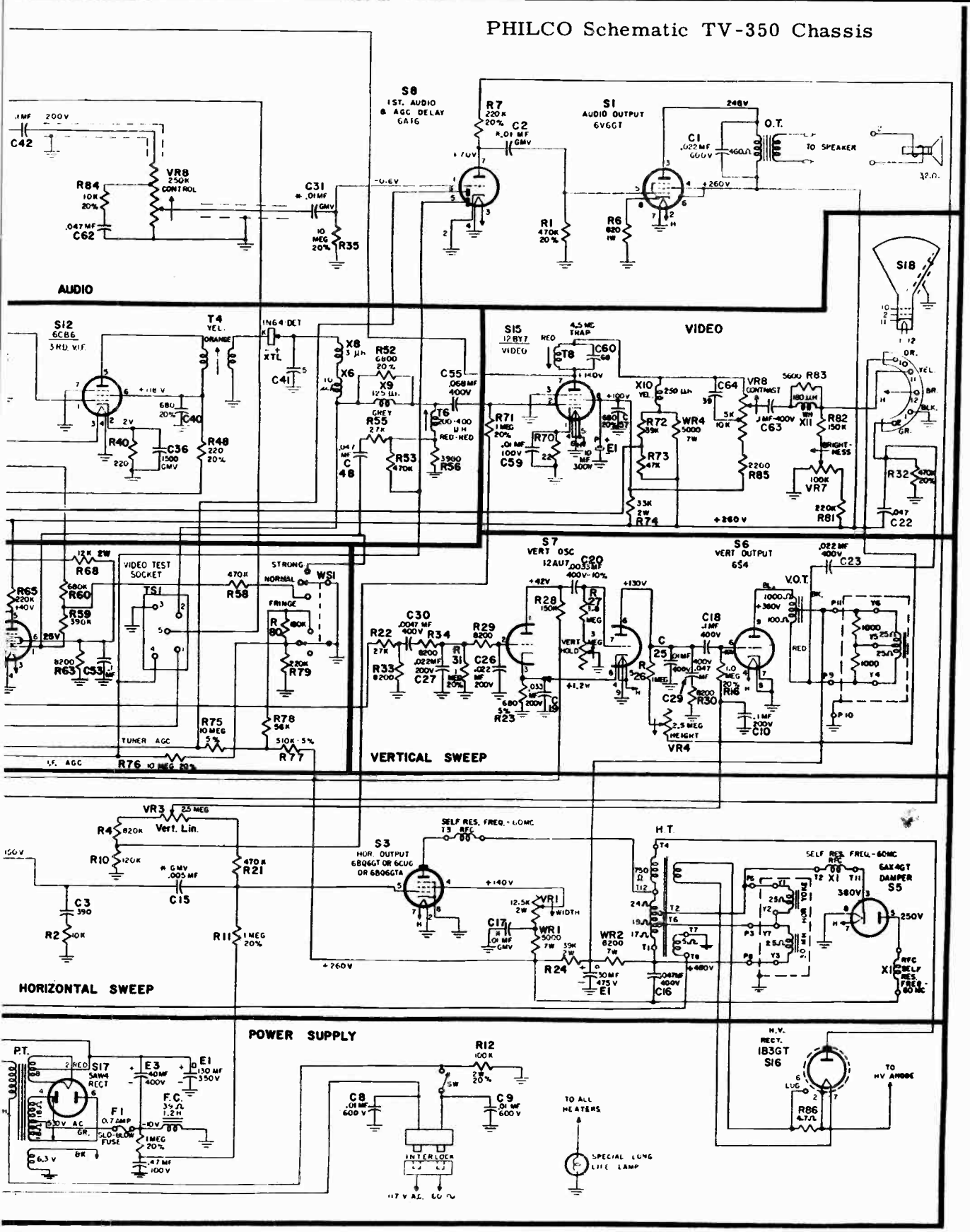

- TV-350 Chassis.

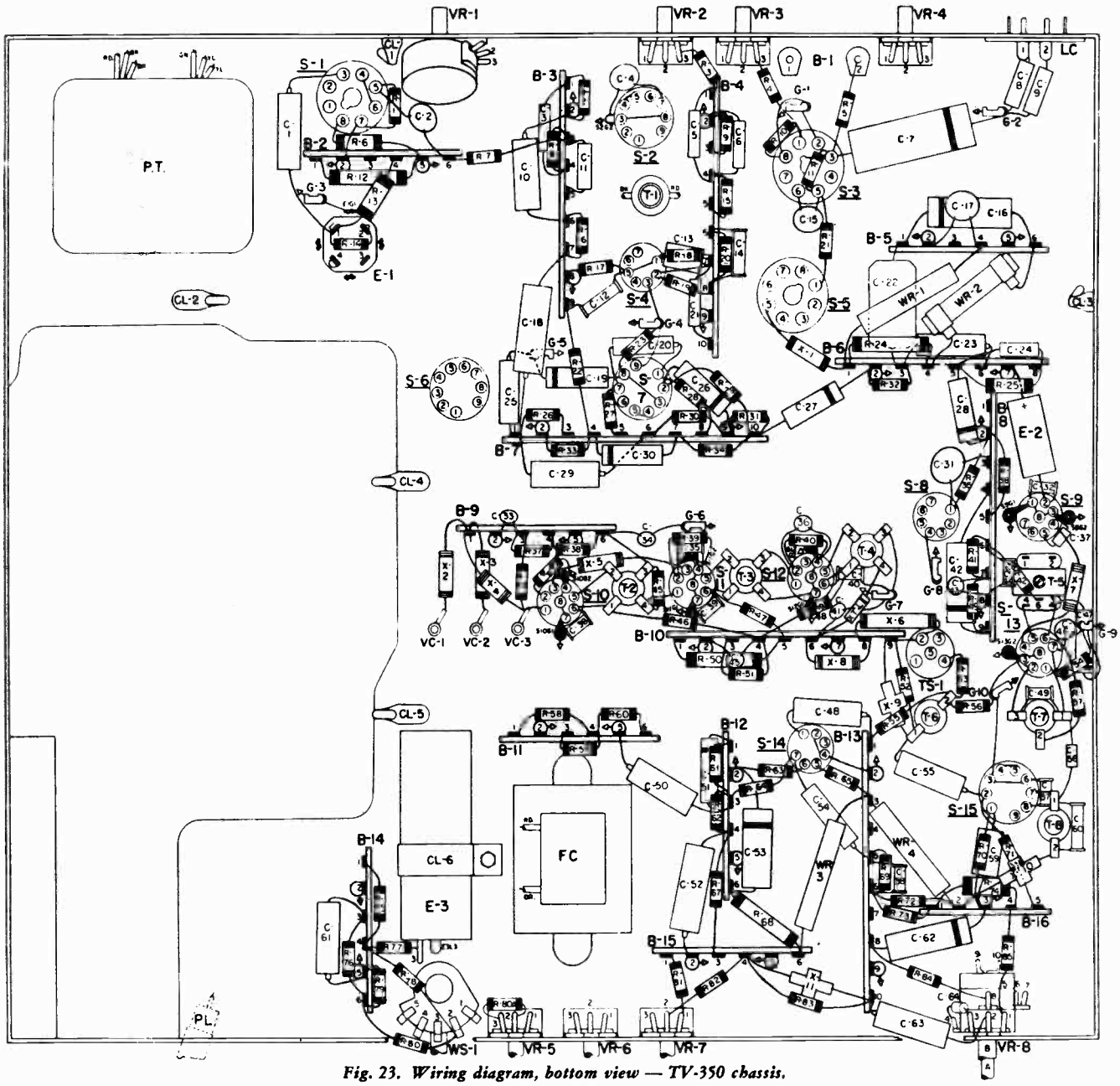

Fig. 23. Wiring diagram, bottom view — TV-350 chassis.

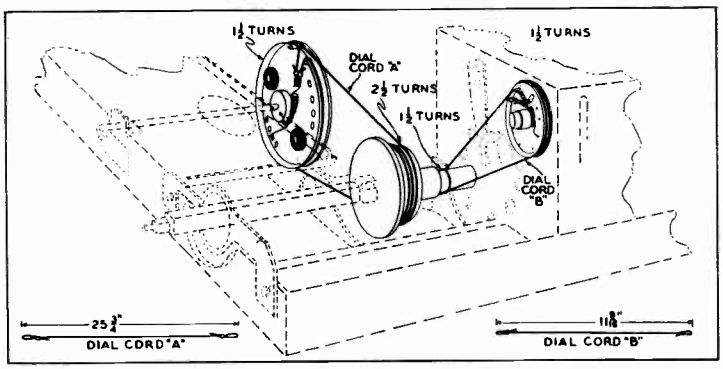

Fig. 24. Dial cord stringing arrangement (TV-350 & TV-354).

RCA VICTOR

MODELS
24-S-529, 24-S-529U
24-S-531, 24-S-531U
24-S-532, 24-S-532U

Chassis Nos. KCS84F, KCS84H, KCS84J or KCS84K

MODELS
24-T-420, 24-T-420U
24-T-435, 24-T-435U

Chassis No. KCS84C or KCS84E

Models 24S529, 24S531, and 24S532, use Chassis KCS84F or KCS84J which employ VHF tuner KRK-22D. The exact circuit for these sets is published in this manual. Chassis KCS84H and KCS84K are identical to other chassis except that a combination VHF-UHF (KRK-30D/E) tuner is used. These chassis are used in Models 24S529U, 24S531U, and 24S532U.

Models 24T420 and 24T435 use Chassis KCS84C which is practically identical to KCS84F. Models 24T420U and 24T435U use Chassis KCS84E which is practically identical to KCS84H.

PICTURE I-F TRANSFORMER ADJUSTMENTS.—

Connect the i-f signal generator across the link circuit on terminals A and B of T104.

Connect the "VoltOhmyst" to the junction of R123 and C142. Turn the AGC control fully clockwise.

Obtain two 7.5 volt batteries capable of withstanding appreciable current drain and connect the ends of a 1,000 ohm potentiometer across each. Connect the battery positive terminal of one to the chassis and the potentiometer arm to the junction of R123 and C142.

Set the bias to produce approximately —5.0 volt of bias at the junction of R123 and C142.

Connect the "VoltOhmyst" to the junction of R135 and L102 and to ground.

Set the VHF signal generator to each of the following frequencies and peak the specified adjustment for maximum indication on the "VoltOhmyst." During alignment, reduce the input signal if necessary in order to produce 3.0 volts of d-c at R135 and L102 with —5.0 volts of i-f bias at the junction of R123 and C142.

44.5 mc. T108
45.5 mc. T107
43.0 mc. T106

Set the VHF signal generator to the following frequency and adjust the picture i-f trap for minimum d-c output at R135, L102. 47.25 mc. L118

SWEEP ALIGNMENT OF PICTURE I-F.—

To align T1 and T104, connect the sweep generator to the mixer grid test point TP2, in series with a 1500 mmf. ceramic capacitor. Use the shortest leads possible, with not more than one inch of unshielded lead at the end of the sweep cable. Connect the sweep ground lead to the top of the tuner.

Set the channel selector switch to channel 4.

Clip 330 ohm resistors across terminals A and B of T107 and T108.

Preset C122 to minimum capacity.

Adjust the bias box potentiometer to obtain —5.0 volts of bias as measured by a "VoltOhmyst" at the junction of R123 and C142. Set the AGC control fully clockwise.

Connect a 180 ohm composition resistor from pin 5 of V106 to terminal A of T106. Connect the oscilloscope diode probe to pin 5 of V106 and to ground.

Couple the signal generator loosely to the diode probe in order to obtain markers.

Adjust T1 (top) and T104 (top) for maximum gain and with 45.75 mc. at 75% of maximum response.

Set the sweep output to give 0.3 volt peak-to-peak on the oscilloscope when making the final touch on the above adjustment.

Adjust C122 until 42.5 mc. is at 70% response with respect to the low frequency shoulder of the curve as shown in Figure 23. Maximum allowable tilt is 20%.

Disconnect the diode probe, the 180 ohm and two 330 ohm resistors.

Connect the oscilloscope to the junction of R135 and L102.

Leave the sweep generator connected to the mixer grid test point TP2 with the shortest leads possible.

Adjust the output of the sweep generator to obtain 3.0 volts peak-to-peak on the oscilloscope.

Couple the signal generator loosely to the grid of the first pix i-f amplifier. Adjust the output of the signal generator to produce small markers on the response curve.

Retouch T106, T107 and T108 to obtain the response shown in Figure 24.

RATIO DETECTOR ALIGNMENT.—Set the signal generator at 4.5 mc. and connect it to the first sound i-f grid, pin 1 of V101.

Connect the "VoltOhmyst" to pin 2 of V103.

Tune the ratio detector primary, T102 top core for maximum d-c output on the "VoltOhmyst." Adjust the signal level from the signal generator for 6 volts on the "VoltOhmyst" when finally peaked. This is approximately the operating level of the ratio detector for average signals.

Connect the "VoltOhmyst" to the junction of R108 and C109.

Tune the ratio detector secondary T102 bottom core for zero d-c on the "VoltOhmyst."

Repeat adjustments of T102 top for maximum d-c at pin 2 of V103 and T102 bottom for zero d-c at the junction of R108 and C109. Make the final adjustments with the signal input level adjusted to produce 6 volts d-c on the "VoltOhmyst" at pin 2 of V103.

SOUND I-F ALIGNMENT.—Connect the signal generator to the first sound i-f amplifier grid, pin 1 of V101.

Connect the "VoltOhmyst" to pin 2 of V103.

Tune the T101 top core for maximum d-c on the "VoltOhmyst."

The output from the signal generator should be set to produce approximately 6.0 volts on the "VoltOhmyst" when the final touches on the above adjustment are made.

4.5 MC. TRAP ADJUSTMENT.—Connect the signal generator in series with a 100 ohm resistor to pin 2 of V109. Set the generator to 4.5 mc. and modulate it 30% with 400 cycles. Set the output to approximately 0.5 volt.

Short the third pix i-f grid to ground, pin 1, V108, to prevent noise from masking the output indication.

Connect the crystal diode probe of an oscilloscope to the plate of the video amplifier, pin 9 of V110.

Adjust the core of L104 for minimum output on the oscilloscope.

Remove the short from pin 1, V108 to ground.

RCA VICTOR

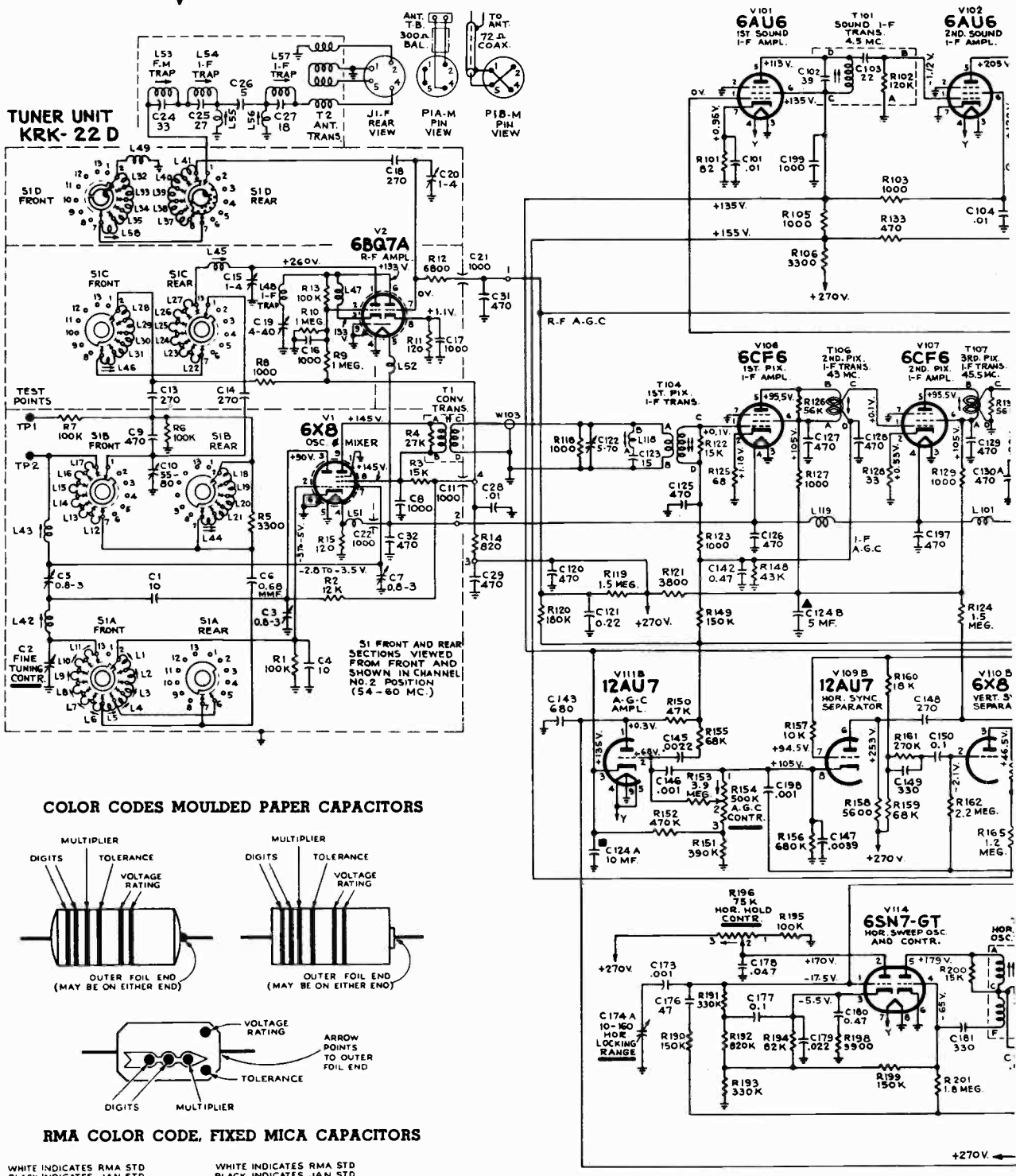

The schematic is shown in the latest condition at the time of printing.

All resistance values in ohms. K = 1000.

CIRCUIT SCHEMATIC DIAGRAM KCS84F OR KCS84J

24-S-529, 24-S-531
24-S-532

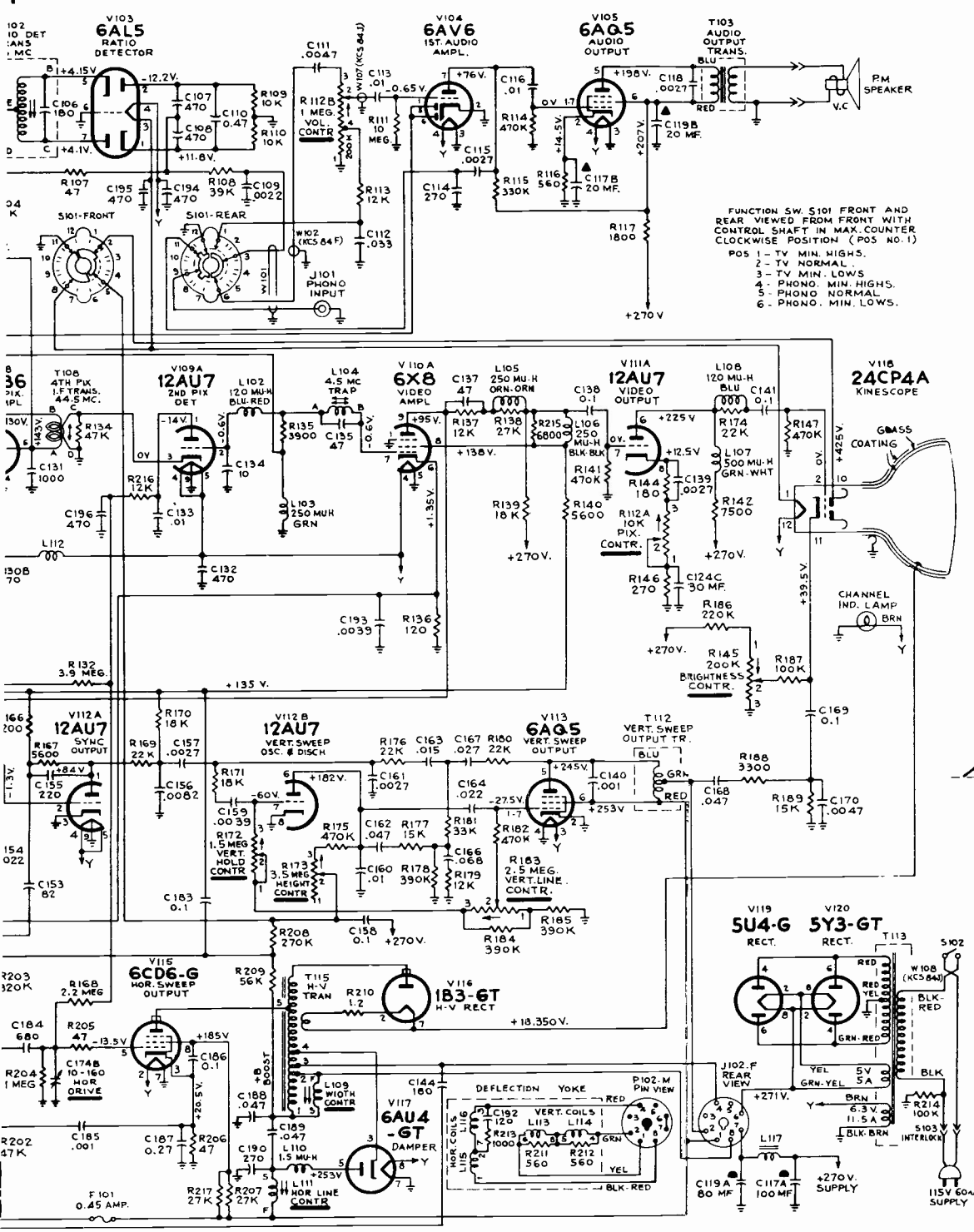

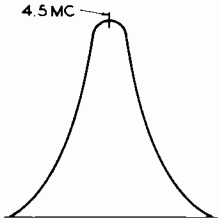

Figure 21—Sound I-F Response

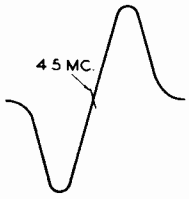

Figure 22—Ratio Det. Response

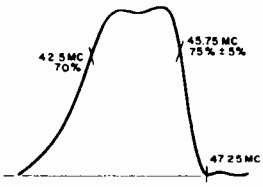

Figure 23—KRK22D T1 and T104 Response

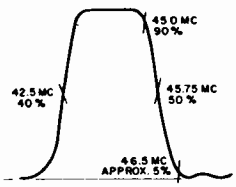

Figure 24—Overall I-F Response with KRK22D

(For voltage information see the next three pages)

Direction of arrows at controls indicates clockwise rotation.

All voltages measured with "Volt-Ohmyst" and with no signal input. Voltages should hold within ±20% with 117 v. a-c supply.

Schematic Diagram KCS84F or KCS84J

RCA Victor (continued)

CHASSIS TOP VIEW

24-S-529, 24-S-529U, 24-S-531
24-S-531U, 24-S-532, 24-S-532U

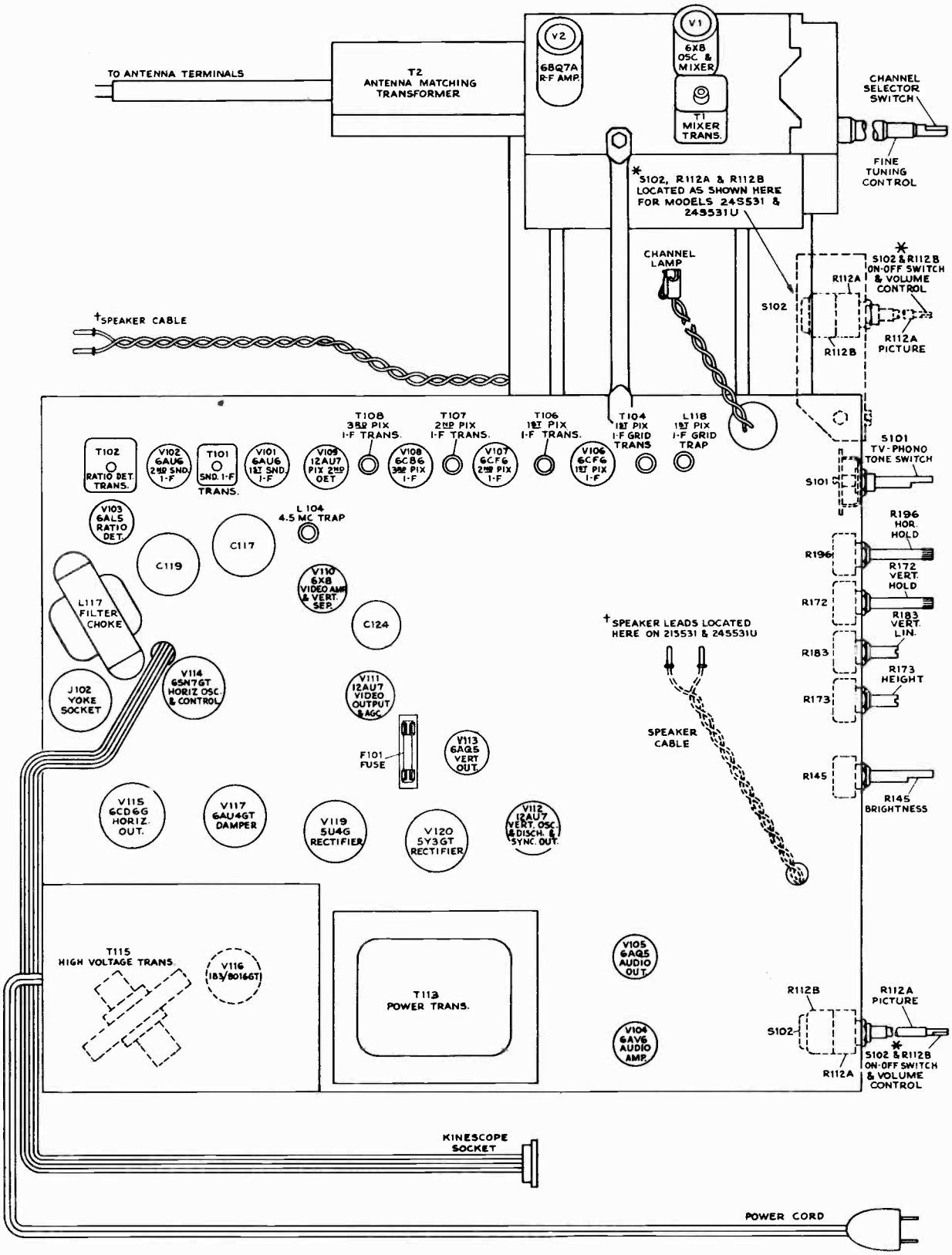

Chassis Top View (shown with KRK22D Tuner)

24-S-529, 24-S-529U, 24-S-531
24-S-531U, 24-S-532, 24-S-532U

RCA Victor (continued)

VOLTAGE CHART

The following measurements represent two sets of conditions. In the first condition, a 15000 microvolt test pattern signal was fed into the receiver, the picture synced and the AGC control properly adjusted. The second condition was obtained by removing the antenna leads and short circuiting the receiver antenna terminals. Voltages shown are read with a type WV97A senior "VoltOhmyst" between the indicated terminal and chassis ground and with the receiver operating on 117 volts, 60 cycles, a-c. The symbol < means less than.

Balance of voltage chart on the next page, over.

Tube No.	Tube Type	Function	Operating Condition	E. Plate		E. Screen		E. Cathode		E. Grid		Notes on Measurements
				Pin No.	Volts	Pin No.	Volts	Pin No.	Volts	Pin No.	Volts	
V1 (V2) KRK22D or KRK30D (or E)	6BQ7A	R-F Amplifier	15000 Mu. V. Signal	6	170	—	—	8	0.1	7		
			No Signal	6	133	—	—	8	1.1	7	0	
		R-F Amplifier	15000 Mu. V. Signal	1	270	—	—	3	170	2	—	
			No Signal	1	260	—	—	3	133	2	—	
V2 (V1) KRK22D or KRK30D (or E)	6X8	Mixer	15000 Mu. V. Signal	9	160	8	160	6	0	7	−2.4 to −3.0	
			No Signal	9	145	8	145	6	0	7	−2.8 to −3.5	
		R-F Oscillator	15000 Mu. V. Signal	3	95	—	—	6	0	2	−3.8 to −5.5	
			No Signal	3	90	—	—	6	0	2	−3.0 to −5.1	
V101	6AU6	1st Sound I-F Amp.	15000 Mu. V. Signal	5	122	6	138	7	1.01	1	0	
			No Signal	5	113	6	126	7	.95	1	0	
V102	6AU6	2nd Sound I-F Amp.	15000 Mu. V. Signal	5	210	6	130	7	0	1	−2.05	*Unreliable measuring point. Voltage depends on noise.
			No Signal	5	205	6	122	7	0	1	*−1.12	
V103	6AL5	Ratio Detector	15000 Mu. V. Signal	7	1.7	—	—	1	21	—	—	7.5 kc deviation at 1000 cycles
			No Signal	7	4.1	—	—	1	11.8	—	—	
		Ratio Detector	15000 Mu. V. Signal	2	1.7	—	—	5	21	—	—	
			No Signal	2	4.1	—	—	5	11.8	—	—	
V104	6AV6	1st Audio Amplifier	15000 Mu. V. Signal	7	78	—	—	2	0	1	−.7	At min. volume
			No Signal	7	76	—	—	2	0	1	−.65	At min. volume
V105	6AQ5	Audio Output	15000 Mu. V. Signal	5	205	6	220	2	15.2	1-7	0	At min. volume
			No Signal	5	198	6	207	2	14.5	1-7	0	At min. volume
V106	6CF6	1st Pix. I-F Amplifier	15000 Mu. V. Signal	5	218	6	240	2	132	1	−8.2	*Unreliable measuring point. Make measurement at T104-B.
			No Signal	5	95.5	6	105	2	1.18	1	*<0.1	
V107	6CF6	2nd Pix. I-F Amplifier	15000 Mu. V. Signal	5	222	6	243	2	<0.1	1	−8.45	
			No Signal	5	95.5	6	105	2	0.53	1	<0.1	
V108	6CB6	3rd Pix. I-F Amplifier	15000 Mu. V. Signal	5	138	6	150	2	2.3	1	0	
			No Signal	5	130	6	143	2	2.2	1	<0.1	
V109A	12AU7	Picture 2nd Det.	15000 Mu. V. Signal	1	−25.8	—	—	3	0	2	−1.85	
			No Signal	1	−14	—	—	3	0	2	−.6	

RCA Victor (continued)

VOLTAGE CHART

24-S-529, 24-S-529U, 24-S-531
24-S-531U, 24-S-532, 24-S-532U

Tube No.	Tube Type	Function	Operating Condition	E. Plate		E. Screen		E. Cathode		E. Grid		Notes on Measurements
				Pin No.	Volts	Pin No.	Volts	Pin No.	Volts	Pin No.	Volts	
V109B	12AU7	Horiz. Sync Separator	15000 Mu. V. Signal	6	260	—	—	8	160	7	122	
			No Signal	6	253	—	—	8	105	7	94.5	
V110A	6X8	Video Amplifier	15000 Mu. V. Signal	9	120	8	147	6	.9	7	−1.85	AGC control set for normal operation
			No Signal	9	95	8	138	6	1.35	7	−.6	AGC control set for normal operation
V110B	6X8	Vert. Sync Separator	15000 Mu. V. Signal	3	79	—	—	6	.90	2	−26.8	
			No Signal	3	46.5	—	—	6	1.35	2	−2.1	
V111A	12AU7	Video Output	15000 Mu. V. Signal	6	231	—	—	8	13	7	0	
			No Signal	6	225	—	—	8	12.5	7	0	
V111B	12AU7	AGC Amplifier	15000 Mu. V. Signal	1	−55	—	—	3	135	2	125	
			No Signal	1	0.3	—	—	3	132	2	68	
V112A	12AU7	Sync Output	15000 Mu. V. Signal	1	83	—	—	3	0	2	−3.28	
			No Signal	1	84	—	—	3	0	2	−1.3	
V112B	12AU7	Vertical Oscillator & Discharge	15000 Mu. V. Signal	6	80	—	—	8	0	7	−63.5	Depends on setting of Vert. hold control
			No Signal	6	182	—	—	8	0	7	−60	Voltages shown are synced pix adjustment
V113	6AQ5	Vertical Output	15000 Mu. V. Signal	5	253	6	262	2	0	1-7	−28.8	
			No Signal	5	245	6	253	2	0	1-7	−27.5	
V114	6SN7GT	Horizontal Osc. Control	15000 Mu. V. Signal	2	175	—	—	3	−3.5	1	−21	
			No Signal	2	170	—	—	3	−5.5	1	−17.5	
	6SN7GT	Horizontal Oscillator	15000 Mu. V. Signal	5	183	—	—	6	0	4	−67	
			No Signal	5	179	—	—	6	0	4	−65	
V115	6CD6G	Horizontal Output	15000 Mu. V. Signal	Cap	*	8	193	3	22	5	−14	*High Voltage Pulse Present
			No Signal	Cap	*	8	185	3	20.5	5	−13.5	*High Voltage Pulse Present
V116	1B3GT /8016	H. V. Rectifier	15000 Mu. V. Signal	Cap	*	—	—	2 & 7	18,700	—	—	*High Voltage Pulse Present
			No Signal	Cap	*	—	—	2 & 7	18,350	—	—	*High Voltage Pulse Present
V117	6AU4GT	Damper	15000 Mu. V. Signal	5	261	—	—	3	*	—	—	*High Voltage Pulse Present
			No Signal	5	253	—	—	3	*	—	—	*High Voltage Pulse Present
V118	24CP4A	Kinescope	15000 Mu. V. Signal	Cap	18,700	10	428	11	44.5	2	0	At average Brightness
			No Signal	Cap	18,350	10	425	11	39.5	2	0	At average Brightness
V119 V120	5U4G 5Y3GT	Rectifiers	15000 Mu. V. Signal	4 & 6	—	—	—	2 & 8	277	—	—	
			No Signal	4 & 6	—	—	—	2 & 8	271	—	—	

RCA VICTOR

TELEVISION RECEIVERS—MODELS

(Continued below and on the next 7 pages)

21-S-501(U), 21-S-502(U), 21-S-503(U), 21-S-504(U), 21-S-505(U), 21-S-506(U), 21-S-517(U), 21-S-518(U), 21-S-519(U), 21-S-521(U), 21-S-522(U), 21-S-523(U), 21-S-525(U), 21-S-526(U), 21-S-537(U), 21-S-5251(U), 21-S-5252(U)

Chassis Nos. KCS88B, KCS88C, KCS88D, KCS88E, KCS88J, KCS88K, KCS88L, KCS88M, KCS88V, or KCS88VA

The models listed at left without the suffix "U" are for VHF reception. These models use Chassis KCS88B, KCS88C, KCS88D, KCS88E, KCS88V, with tuner unit KRK-22D. The models with the suffix "U" use Chassis KCS88J, KCS88K, KCS88L, KCS88M, or KCS88VA, with VHF-UHF tuner unit KRK-30, and the circuit for these sets is included.

21-S-348K, 21-S-348KU, 21-S-355K, 21-S-355KU, 21-S-357K, 21-S-357KU, 21-S-362K, 21-S-362KU, 21-S-367K, 21-S-367KU, 21-S-369K, 21-S-369KU

Chassis Nos. KCS88, KCS88A, KCS88F or KCS88H

The models listed at left without the suffix "U" use Chassis KCS88, KCS88A, which are very similar to Chassis KCS-88B. The models with the suffix "U" use Chassis KCS88F or KCS88H which are similar KCS88J, but use tuner KRK-31 for combined VHF and UHF reception. In general, this service material is applicable to all models.

Models 21S548 (Chassis KCS88N) and 21S548U (Chassis KCS88P) are combinations with the television sections very similar to the sets described on these pages.

Models 17S450, 17S451, and 17S453, use Chassis KCS87 with tuner KRK-32. These same numbered models with a suffix "U" use Chassis KCS87A with tuner KRK-30A. These are similar sets to the ones covered in these pages, but use 17HP4 picture tubes.

ION TRAP MAGNET ADJUSTMENT.—Set the ion trap magnet approximately in the position shown in Figure 3. Starting from this position immediately adjust the magnet by moving it forward or backward at the same time rotating it slightly around the neck of the kinescope for the brightest raster on the screen. Reduce the brightness control setting until the raster is slightly above average brilliance. Turn the focus control (shown in Figure 3) until the line structure of the raster is clearly visible. Readjust the ion trap magnet for maximum raster brilliance. The final touches of this adjustment should be made with the brightness control at the maximum clockwise position with which good line focus can be maintained.

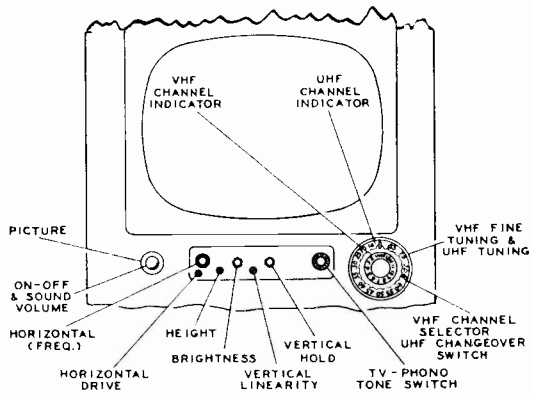

Receiver Operating Controls (UHF-VHF Models).

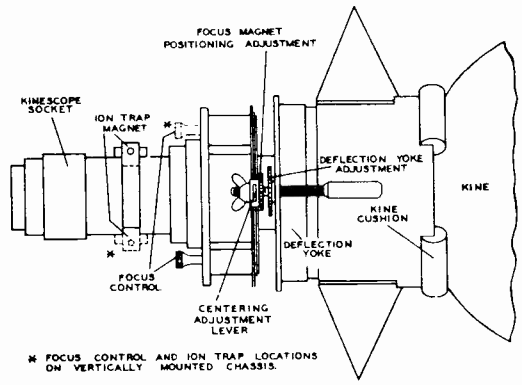

Figure 3—Yoke and Focus Magnet Adjustments

DO NOT INSTALL, REMOVE OR HANDLE THE KINESCOPE IN ANY MANNER UNLESS SHATTER-PROOF GOGGLES ARE WORN. PEOPLE NOT SO EQUIPPED SHOULD BE KEPT AWAY WHILE HANDLING KINESCOPES. KEEP THE KINESCOPE AWAY FROM THE BODY WHILE HANDLING.

RCA Victor (continued)

INSTALLATION INSTRUCTIONS

21-S-501 to 21-S-537 incl.
21-S-501U to 21-S-537U incl.

DEFLECTION YOKE ADJUSTMENT.—If the lines of the raster are not horizontal or squared with the picture mask, rotate the deflection yoke until this condition is obtained. Tighten the knurled yoke adjustment nuts.

PICTURE ADJUSTMENTS.—It will now be necessary to obtain a test pattern or picture in order to make further adjustments.

When the Horizontal Oscillator and AGC System are operating properly, it should be possible to sync the picture at this point. However, if the AGC control is misadjusted, and the receiver is overloading, it may be impossible to sync the picture.

If the receiver is overloading, turn R149 on the rear apron (see Figure 4) counter-clockwise until the set operates normally and the picture can be synced.

CHECK OF HORIZONTAL OSCILLATOR ADJUSTMENT.—Turn the horizontal hold control to the extreme clockwise position. The picture should be out of sync, with approximately twelve bars slanting downward to the right. Turn the control counter-clockwise slowly. The number of diagonal black bars will be gradually reduced and when only 1½ to 3 bars sloping downward to the right are obtained, the picture will pull into sync upon slight additional counter-clockwise rotation of the control. The picture should remain in sync for approximately two full turns of additional counter-clockwise rotation of the control. Continue counter-clockwise rotation until the picture falls out of sync. Rotation beyond fall-out position should produce between 2 and 5 bars before interrupted oscillation (motorboat occurs). Interrupted oscillation (motorboat) should be reached before full counter-clockwise rotation.

When the receiver passes the above checks and the picture is normal and stable, the horizontal oscillator is properly aligned. Skip "Adjustment of Horizontal Oscillator" and proceed with "Focus Magnet Adjustment."

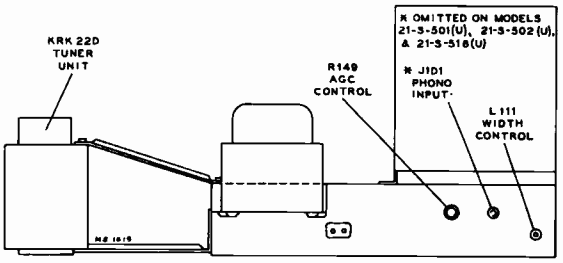

Figure 4—Rear Chassis Adjustments

ADJUSTMENT OF HORIZONTAL OSCILLATOR.—If in the above check the receiver failed to hold sync over two full turns of counter-clockwise rotation of the control from the pull-in point, it will be necessary to make the following adjustments.

Turn the horizontal drive trimmer C171 fully clockwise, then counter-clockwise one full turn. Set the width coil L111 with the stud flush with the inside edge of the chassis. Set the sine wave coil L121 fully counter-clockwise.

Adjustment of the horizontal frequency control in the counter-clockwise direction will show a multiple number of bars before "motorboat" occurs. Adjust the sine wave coil L121 until 3 or 4 bars are present before "motorboat" occurs, when the horizontal frequency control is rotated counter-clockwise from the fall out point.

If it is impossible to sync the picture and the AGC system is in proper adjustment it will be necessary to align the Horizontal Oscillator by the method outlined in the alignment procedure on page

FOCUS MAGNET ADJUSTMENT.—The focus magnet should be adjusted so that there is approximately three-eighths inch of space between the rear plate of the yoke and the flat of the front face of the focus magnet. This spacing gives best average focus over the face of the tube.

The axis of the hole through the magnet should be parallel with the axis of the kinescope neck with the kinescope neck centered in the opening.

CENTERING ADJUSTMENT.—Centering is accomplished by means of a separate plate on the focus magnet. The centering plate includes a nut which must be loosened before centering. Up and down adjustment of the plate moves the picture up and down and sidewise adjustment moves the picture from side to side.

If a corner of the raster is shadowed, check the position of the ion trap magnet. Reposition the magnet within the range of maximum raster brightness to eliminate the shadow and recenter the picture by adjustment of the focus magnet plate. In no case should the magnet be adjusted to cause any loss of brightness since such operation may cause immediate or eventual damage to the tube. In some cases it may be necessary to shift the position of the focus magnet in order to eliminate a corner shadow.

WIDTH AND DRIVE ADJUSTMENTS.—Set the horizontal control at the "pull-in" point. Adjustment of the horizontal drive control affects the high voltage applied to the kinescope. In order to obtain the highest possible voltage hence the brightest and best focused picture, adjust horizontal drive trimmer counter-clockwise until a bright vertical line appears in the middle of the picture then clockwise until the bright

NOTE: Chassis designations with an "X" as the final letter (such as KCS88CX) use plate assembly Z102, instead of printed circuit PC102, for picture IF section and are connected as shown below.

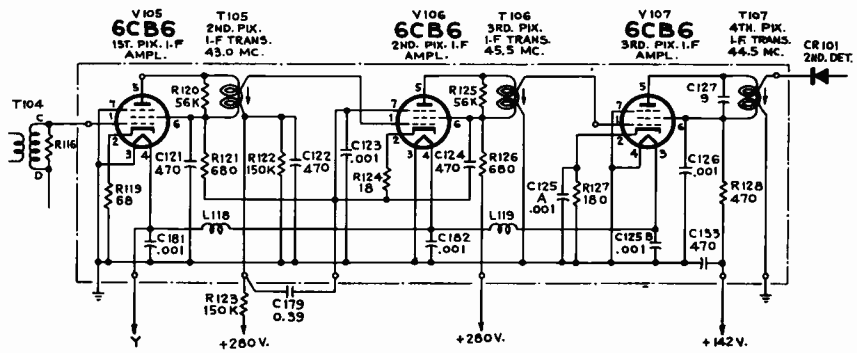

line just disappears.

At maximum brightness adjust the width control L111 to obtain correct picture width.

Return the brightness to normal level and readjust the drive trimmer C171 as before.

Adjustments of the horizontal drive control affect horizontal oscillator hold and locking range. If the drive control was adjusted, recheck the oscillator alignment.

HEIGHT AND VERTICAL LINEARITY ADJUSTMENTS.—Adjust the height control (R165 behind front control panel) until the picture fills the mask vertically. Adjust vertical linearity (R174 behind front control panel), until the test pattern is symmetrical from top to bottom. Adjustment of either control will require a readjustment of the other. Adjust centering to align the picture with the mask.

FOCUS.—Adjust the focus control for maximum definition in the test pattern vertical "wedge" and best focus in the white areas of the pattern.

Recheck the position of the ion trap magnet to make sure that maximum brightness is obtained.

Check to see that the knurled nuts of the yoke and focus magnet and the focus magnet mounting nuts are tight.

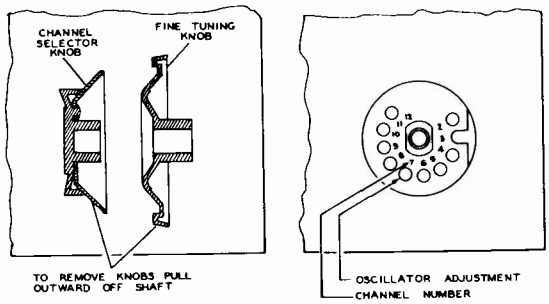

Figure 5—KRK22D R-F Oscillator Adjustments

KRK22D, OR KRK30 VHF R-F OSCILLATOR ADJUSTMENTS.—Tune in all available stations to see if the receiver r-f oscillator is adjusted to the proper frequency on all channels. The adjustments for channels 2 through 12 are available from the front of the cabinet by removing the station selector escutcheon as shown in Figure 5 or 6. Adjustment for channel 13 is on top of the chassis. The oscillator for the UHF tuner section of the KRK30 tuner should be adjusted by the method outlined on page 14 under Alignment Procedure.

AGC THRESHOLD CONTROL.—The AGC threshold control R149 is adjusted at the factory and normally should not require readjustment in the field.

To check the adjustment of the AGC Threshold Control, tune in a strong signal and sync the picture. Momentarily remove the signal by switching off channel and then back. If the picture reappears immediately, the receiver is not overloading due to improper setting of R149. If the picture requires an appreciable portion of a second to reappear, or bends excessively, R149 should be readjusted.

Turn R149 fully counter-clockwise. The raster may be bent slightly. This should be disregarded. Turn R149 clockwise until there is a very, very slight bend or change of bend in the picture. Then turn R149 counter-clockwise just sufficiently to remove this bend or change of bend.

If the signal is weak, the above method may not work as it may be impossible to get the picture to bend. In this case, turn R149 clockwise until the snow in the picture becomes more pronounced, then counter-clockwise until the best signal to noise ratio is obtained.

The AGC control adjustment should be made on a strong signal if possible. If the control is set too far clockwise on a weak signal, then the receiver may overload when a strong signal is received.

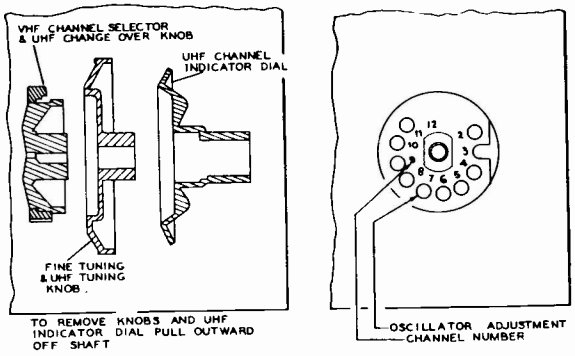

Figure 6—KRK30 VHF R-F Oscillator Adjustment

FM TRAP ADJUSTMENT.—In some instances interference may be encountered from a strong FM station signal. A trap is provided to eliminate this type of interference. To adjust the trap tune in the station on which the interference is observed and adjust the FM trap for minimum interference in the picture. The trap is L53 on KRK22D or L5 or KRK30 tuners and is located on the antenna matching transformer.

CAUTION.—In some receivers, the FM trap L5 or L53 will tune down into channel 6 or even into channel 5. Needless to say, such an adjustment will cause greatly reduced sensitivity on these channels. If channels 5 or 6 are to be received, check L5 or L53 to make sure that adjustment does not affect sensitivity on these two channels.

Replace the cabinet back and connect the receiver antenna leads to the cabinet back. Make sure that the screws holding the back are up tight, otherwise it may rattle or buzz when the receiver is operated at high volume.

KINESCOPE AND SAFETY GLASS CLEANING.—The front safety glass may be removed to allow for cleaning of the kinescope faceplate and the safety glass if required.

To do this, remove the rear panel of the receiver. There are several flat springs holding the front metal trim of the cabinet to the plastic kinescope mask.

Reach in from the rear of the receiver and press in on each spring at the open end. Slide the spring out of the slot provided. The front trim and safety glass should be held in position by another person to prevent its falling outward when removing the springs.

Remove the metal trim and the safety glass.

The kinescope faceplate and the safety glass should only be cleaned with a soft cloth and "Windex" or similar cleaning agent.

Replace the metal trim, the cabinet rear panel and the safety glass.

PICTURE I-F TRANSFORMER ADJUSTMENTS.—

Connect the i-f signal generator, in series with a 1500 mmf. ceramic capacitor, to the mixer grid test point TP2.

Connect the "VoltOhmyst" to the junction of R118, R146 and C120 and to ground. Turn the AGC control fully clockwise.

Obtain two 7.5 volt batteries capable of withstanding appreciable current drain and connect the ends of a 1,000 ohm potentiometer across each. Connect the battery positive terminal of one to the chassis and the potentiometer arm to the junction of R118, R146 and C120. The second battery will be used later.

Set the bias to produce approximately —4.0 volt of bias at the junction of R118, R146 and C120.

Connect the "VoltOhmyst" to the junction of R129 and L103 and to ground.

Set the VHF signal generator to each of the following frequencies and peak the specified adjustment for maximum indication on the "VoltOhmyst." (Note: These transformers should be peaked with their cores at the ends of the coils nearest the chassis.) During alignment, reduce the input signal if necessary in order to produce 3.0 volts of d-c at R129 and L103 with —4.0 volts of i-f bias at the junction of R118, R146 and C120.

44.5 mc.	T107
45.5 mc.	T106
43.0 mc.	T105

RCA Victor (continued)

ALIGNMENT PROCEDURE

21-S-501 to 21-S-537 incl.
21-S-501U to 21-S-537U incl.

Set the VHF signal generator to the following frequency and adjust the picture i-f trap for minimum d-c output at R129, L103. Use sufficient signal input to produce 3.0 volts of d-c on the meter when the adjustment is made.

47.25 mc. L102

(Note: Core should be at end of coil nearest chassis when properly adjusted.)

SWEEP ALIGNMENT OF PICTURE I-F.—

To align the mixer plate circuit, connect the sweep generator to the mixer grid test point TP2, in series with a 1500 mmf. ceramic capacitor. Use the shortest leads possible, with not more than one inch of unshielded lead at the end of the sweep cable. Connect the sweep ground lead to the top of the tuner.

Set the channel selector switch to channel 4.

Clip a 330 ohm resistor between pin 1 of V107 and ground.

Preset C116 to minimum capacity.

Adjust the bias box potentiometer to obtain —4.0 volts of bias as measured by a "VoltOhmyst" at the junction of R118, R146 and C120.

Connect a 180 ohm composition resistor from pin 5 of V105 to pin 6 of V105. Connect the oscilloscope diode probe to pin 5 of V105 and to ground.

Couple the signal generator loosely to the diode probe in order to obtain markers.

For Models Without Suffix "U"

Adjust T1 (top) and T104 (top) for maximum gain and with 45.75 mc. at 75% of maximum response.

Set the sweep output to give 0.3 to 0.5 volt peak-to-peak on the oscilloscope when making the final touch on the above adjustment.

Adjust C116 until 42.5 mc. is at 70% response with respect to the low frequency shoulder of the curve as shown in Figure 9. Maximum allowable tilt is 20%.

Disconnect the diode probe, the 180 ohm and the 330 ohm resistors.

Connect the oscilloscope to the junction of R129 and L103.

Leave the sweep generator connected to the mixer grid test point TP2 with the shortest leads possible.

Adjust the output of the sweep generator to obtain 3.0 to 5.0 volts peak-to-peak on the oscilloscope.

Couple the signal generator loosely to the grid of the first pix i-f amplifier. Adjust the output of the signal generator to produce small markers on the response curve.

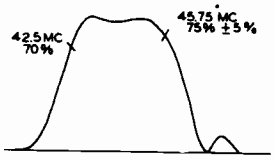

Figure 9—
KRK22D
T1 and T104
Response

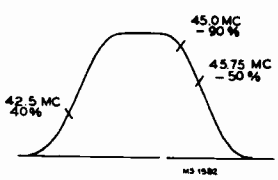

Figure 10—
Overall I-F
Response
with KRK22D

Retouch T105, T106 and T107 to obtain the response shown in Figure 10.

Increase sweep output ten times and check attenuation at 41.25 mc. Adjust T105 and T107 to set 41.25 mc. between 25 and 35 times down with curve as shown in Figure 10.

Move the sweep generator to the antenna terminals. Connect —3.0 volts bias to pin 5 of V103. Adjust T106 and T107. slightly to correct for any overall tilt while switching from channel to channel.

Instructions Applicable to "U" Models

Adjust T2 (top) and T104 (top) for maximum gain and with 45.75 mc. at 75% of maximum response.

Set the sweep output to give 0.3 to 0.5 volt peak-to-peak on the oscilloscope when making the final touch on the above adjustment.

Adjust C116 until 42.5 mc. is at 70% response with respect to the low frequency shoulder of the curve as shown in Figure 11. Maximum allowable tilt is 20%.

Disconnect the diode probe, the 180 ohm and the 330 ohm resistors.

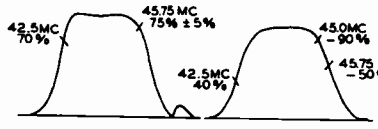

Figure 11—
KRK30
T2 and T104
Response

Figure 12—
Overall
I-F Response
with KRK30

Figure 13—
KRK30
L9 and C308
I-F Response

Connect the oscilloscope to the junction of R129 and L103.

Leave the sweep generator connected to the mixer grid test point TP2 with the shortest leads possible.

Adjust the output of the sweep generator to obtain 3.0 to 0.5 volts peak-to-peak on the oscilloscope.

Couple the signal generator loosely to the grid of the first pix i-f amplifier. Adjust the output of the signal generator to produce small markers on the response curve.

Retouch T105, T106 and T107 to obtain the response shown in Figure 12.

Increase sweep output ten times and check attenuation at 41.25 mc. Adjust T105 and T107 to set 41.25 mc. between 30 and 40 times down with curve as shown in Figure 12.

To align the I-F amplifier circuit of the KRK30, connect the VHF sweep generator to the front terminal of the 1N82 crystal holder in series with a 1000 ohm resistor and a 1500 mmf. ceramic capacitor. Use the shortest leads possible, grounding the sweep ground lead to the tuner case.

To do this, remove the crystal cover and connect the resistor, after insulating the lead with tubing, to the crystal front terminal.

Set the UHF CHANGEOVER switch to the UHF position, and the UHF TUNING between channels 68 and 69 at 800 mc.

Connect a 180 ohm composition resistor and a 1500 mmf. capacitor in series between test point TP3 and ground with the capacitor connected to TP3 and the resistor to ground.

Connect the oscilloscope diode probe to the junction between the resistor and capacitor.

Couple the VHF signal generator loosely to the diode probe in order to obtain markers.

Connect the potentiometer arm of the second bias supply to the AGC terminal on the tuner and ground the battery positive terminal to the tuner case. Adjust the bias potentiometer to produce —3.0 volts of bias, as measured by the "VoltOhmyst" at the AGC terminal on the tuner.

Set the sweep generator to produce 0.5 volt or less peak-to-peak on the oscilloscope.

Adjust C308, on the UHF section, and L9, on the VHF section, of the tuner for maximum gain with 45.75 mc. and 42.5 mc. markers as shown in figure 13.

If necessary adjust L27 to place the 45.75 mc. marker at the peak of the curve. Adjust L43 for minimum tilt of the curve as shown in figure 13.

Remove the resistor, capacitor and diode probe from TP3 and connect the oscilloscope to the junction of R129 and L103. Use 3.0v peak-to-peak on the oscilloscope.

Connect the VHF sweep generator to the antenna terminals. Keep the AGC bias at —3.0 V and the I-F bias at —4.0 volts.

Couple the signal generator loosely to the grid of the first picture I-F amplifier.

Switch through all VHF channels and check for proper curve shape as in figure 12. Retouch T106 and T107 slightly to correct for any overall tilt that is essentially the same on all channels.

Disconnect the VHF sweep generator and connect the UHF sweep generator to the antenna terminals. Check on all UHF channels for proper wave shape as shown in figure 12, re-

touching C308 and L9 if necessary to correct any overall tilt.

Do not retouch T2, T104, T105, T106 or T107.

Remove the sweep and marker generators and the bias supplies.

RATIO DETECTOR ALIGNMENT.—Set the signal generator at 4.5 mc. and connect it to the first video amplifier grid, pin 7 of V108A, in series with a .01 mfd. capacitor.

As an alternate source of signal, the RCA WR39B or WR39C calibrator may be employed. In such a case, connect the calibrator to the grid of the third pix i-f amplifier, pin 1 of V107.

Set the frequency of the calibrator to 45.75 mc. (pix carrier) and modulate with 4.5 mc. crystal. The 4.5 mc. signal will be picked off at pin 9 of V108A and amplified through the sound i-f amplifier.

Connect the "VoltOhmyst" to pin 7 of V102.

Tune the ratio detector primary, T102 top core for maximum d-c output on the "VoltOhmyst." (Peak with core at end of coil away from chassis.) Adjust the signal level from the signal generator for 5 volts on the "VoltOhmyst" when finally peaked. This is approximately the operating level of the ratio detector for average signals.

Connect the "VoltOhmyst" to the junction of R104 and C107.

Tune the ratio detector secondary T102 bottom core for zero d-c on the "VoltOhmyst." (Adjust with core at chassis end of coil.)

Repeat adjustments of T102 top for maximum d-c at pin 7 of V102 and T102 bottom for zero d-c at the junction of R104 and C107. Make the final adjustments with the signal input level adjusted to produce 5 volts d-c on the "VoltOhmyst" at pin 7 of V102.

SOUND TAKE-OFF ALIGNMENT.—Connect the signal generator to the first video amplifier grid, pin 7 of V108A.

As an alternate source of signal, the RCA WR39B or WR39C calibrator may be employed as above.

Connect the "VoltOhmyst" to pin 7 of V102.

Tune the T101 top core for maximum d-c on the "VoltOhmyst." (Peak with core at chassis end of coil.)

The output from the signal generator should be set to produce approximately 5 volts on the "VoltOhmyst" when the final touches on the above adjustment are made.

(Alternate Method for Ratio Detector and Sound I-F Alignment)

Set the signal generator at 4.5 mc. and connect it to the first video amplifier grid, pin 7 of V108A in series with a .01 mfd. capacitor.

Connect the "VoltOhmyst" to pin 7 of V102.

Tune the ratio detector secondary T102 bottom core for maximum d-c on the "VoltOhmyst." (Peak with core at chassis end of coil.)

Tune the ratio detector primary, T102 top core for maximum d-c output on the "VoltOhmyst." (Peak with core at end of coil away from chassis.) Adjust the signal level from the signal generator for 5 volts on the "VoltOhmyst" when finally peaked, when making the above adjustments.

Tune the T101 (top) core for maximum d-c on the "VoltOhmyst." (Peak with core at chassis end of coil.)

The output from the signal generator should be set to produce approximately 5 volts on the "VoltOhmyst" when the final touches on the T101 adjustment are made.

Connect the "VoltOhmyst" to the junction of R104 and C107.

Tune T102 bottom for zero d-c at the junction of R104 and C107. (Make adjustment with core at chassis end of coil.)

4.5 MC. TRAP ADJUSTMENT.—Connect the signal generator in series with a 1500 mmf. capacitor to pin 7 of V108A. Set the generator to 4.5 mc. and modulate it 30% with 400 cycles. Set the output to approximately 0.5 volt.

Short the third pix i-f grid to ground, pin 1, V107, to prevent noise from masking the output indication.

Connect the crystal diode probe of an oscilloscope to the plate of the video output, pin 6 of V109A.

Adjust the core of L109 for minimum output on the oscilloscope. (Make adjustment with core at chassis end of coil.)

Remove the short from pin 1, V107 to ground.

As an alternate method, this step may be omitted at this point in the alignment procedure and the adjustment made "on the air" after the alignment is completed.

If this is done, tune in a station and observe the picture on the kinescope. If no 4.5 mc. beat is present in the picture, when the fine tuning control is set for proper oscillator-frequency, then L109 requires no adjustment. If a 4.5 mc. beat is present, turn the fine tuning control slightly clockwise so as to exaggerate the beat and then adjust L109 for minimum beat.

AGC CONTROL ADJUSTMENT.—Disconnect all test equipment except the oscilloscope which should be connected to pin 6 of V109A.

Connect an antenna to the receiver antenna terminals.

Turn the AGC control fully counter-clockwise.

Tune in a strong signal and adjust the oscilloscope to see the video waveform.

Turn the AGC control clockwise until the tips of sync begin to be compressed, then counter-clockwise until no compression is obtained.

HORIZONTAL OSCILLATOR AND OUTPUT ALIGNMENT.—Normally the alignment of the horizontal oscillator is not considered to be a part of the alignment procedure, but since the oscillator waveform adjustment may require the use of an oscilloscope, it can not be done conveniently in the field. The waveform adjustment is made at the factory and normally should not require readjustment in the field. However, the waveform adjustment should be checked whenever the receiver is aligned.

Turn the horizontal drive trimmer C171 fully clockwise then counter-clockwise one full turn. Set the stud of the width coil L111 flush with the inside rear edge of the chassis.

Place a jumper across the terminals of the sine wave coil L121 and adjust the horizontal (frequency) control until the picture pulls into sync. Remove the short across the sine wave coil.

Connect the low capacity probe of an oscilloscope to the junction of L120, L121 and R189. Turn the horizontal (frequency) control clockwise until the picture falls out of sync, then counter-clockwise until the picture just pulls into sync. The pattern on the oscilloscope should be as shown in Figure 23. Adjust the sine wave adjustment core L121 until the two peaks are at the same height. During this adjustment, the picture must be kept in sync by readjusting the horizontal (frequency) control if necessary.

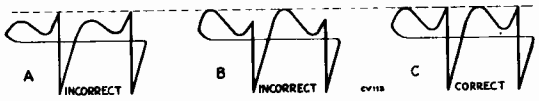

Figure 23—Horizontal Oscillator Waveforms

This adjustment is very important for correct operation of the circuit. If the broad peak of the wave on the oscilloscope is lower than the sharp peak, the noise immunity becomes poorer, the stabilizing effect of the tuned circuit is reduced and drift of the oscillator may occur. On the other hand, if the broad peak is higher than the sharp peak, the oscillator is overstabilized, the pull-in range becomes inadequate and the broad peak can cause double triggering of the oscillator when the hold control approaches the clockwise position.

Remove the oscilloscope upon completion of this adjustment.

Horizontal Drive Adjustment (for correct *locking range*). Turn the horizontal (frequency) control until the picture falls out of sync with the diagonal lines sloping down to the right. Slowly turn the horizontal control counter-clockwise and note the number of diagonal bars obtained just before the picture pulls into sync.

Pull-in should occur with one and one-half to three bars present.

With the horizontal control set at the pull-in point, adjust the horizontal drive trimmer C171 counter-clockwise for a bright vertical line in the center of the picture. Turn the trimmer clockwise until the line just disappears.

Set the brightness control to maximum and adjust the width control so the picture fills the mask. Return the brightness control to normal and readjust the horizontal drive trimmer as above.

The picture should pull into sync with one and one-half to three bars present, remain in sync for approximately two full turns counter-clockwise from pull-in, and fall out of sync with between 2 and 5 bars present before interrupted oscillation (motorboating) occurs.

RCA Victor **CIRCUIT SCHEMATIC DIAGRAM KCS88J, KCS88K, KCS88L, KCS88M or KCS88VA**

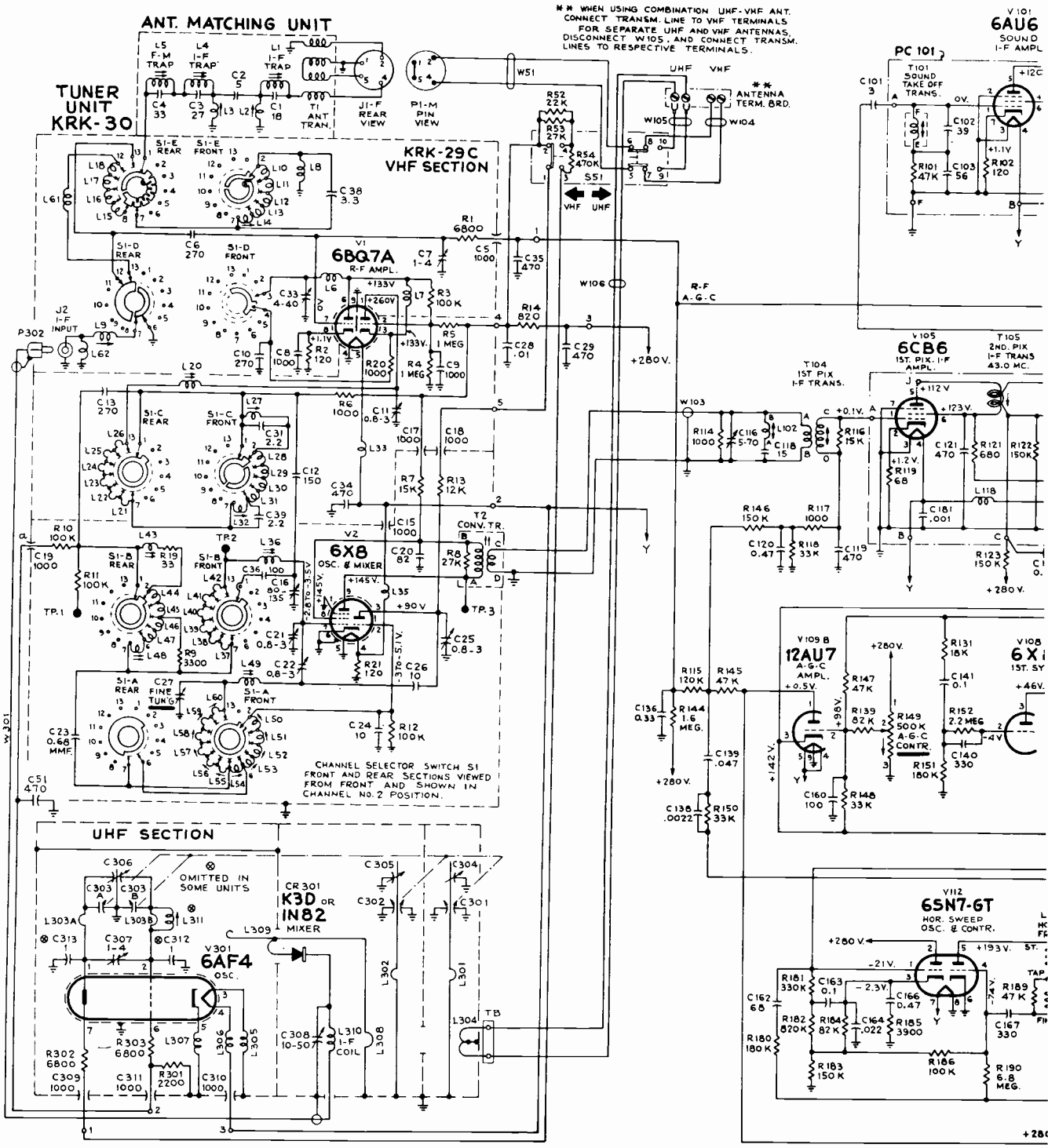

The schematic is shown in the latest condition at the time of printing.
All resistance value in ohms. K = 1000.

All capacitance values less than 1 in MF and above 1 in MMF unless otherwise noted.

RCA Victor

21-S-501U to 21-S-537U incl.

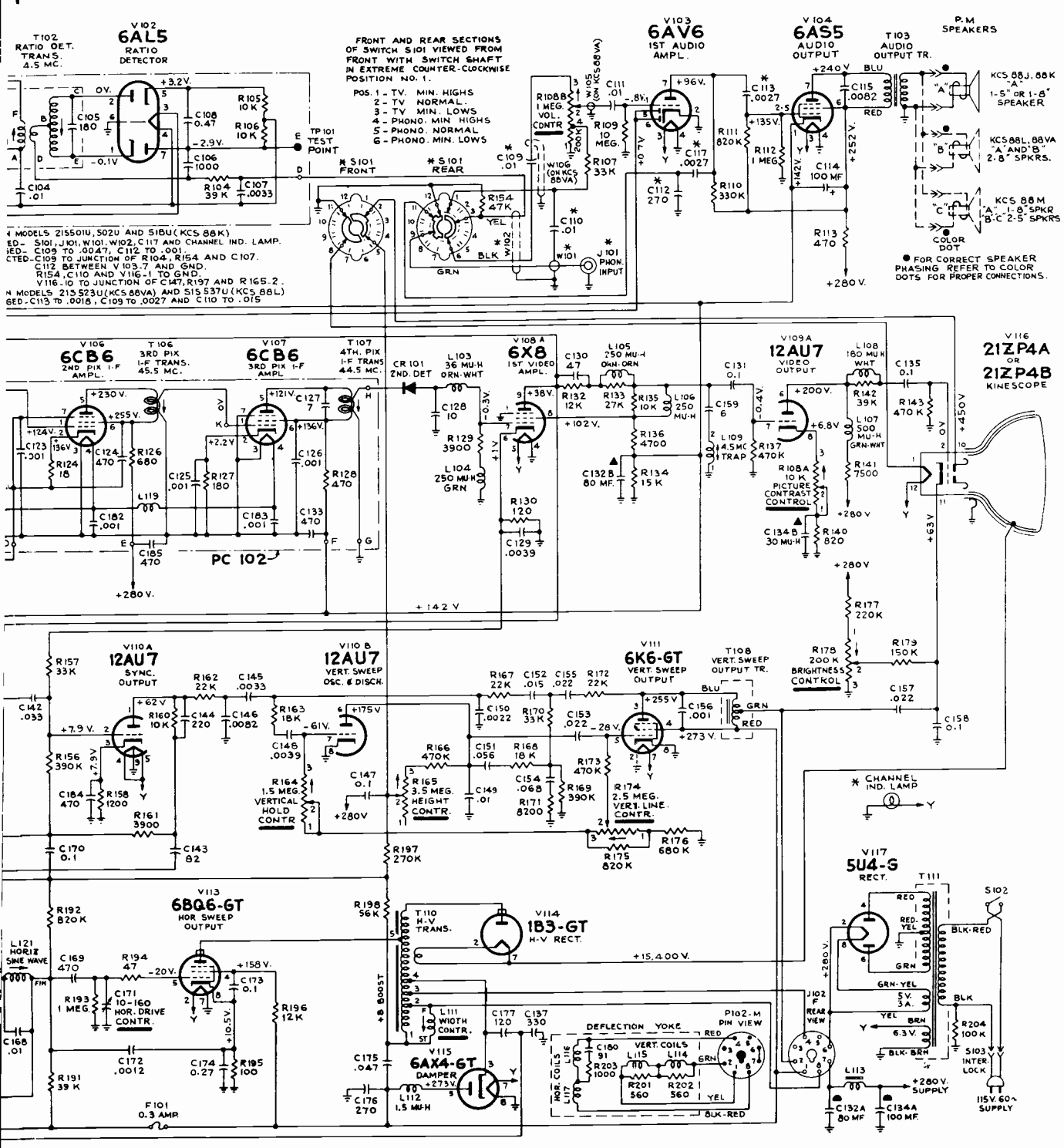

(See next page for chassis top view)

Direction of arrows at controls indicates clockwise rotation.

All voltages measured with "Volt-Ohmyst" and with no signal input. Voltages should hold within ±20% with 117 v. a-c supply.

Schematic Diagram KCS88J, KCS88K, KCS88L, KCS88M or KCS88VA

RCA Victor (continued)

CHASS TOP VIEW

21-S-501 to 21-S-537 incl.
21-S-501U to 21-S-537U incl.

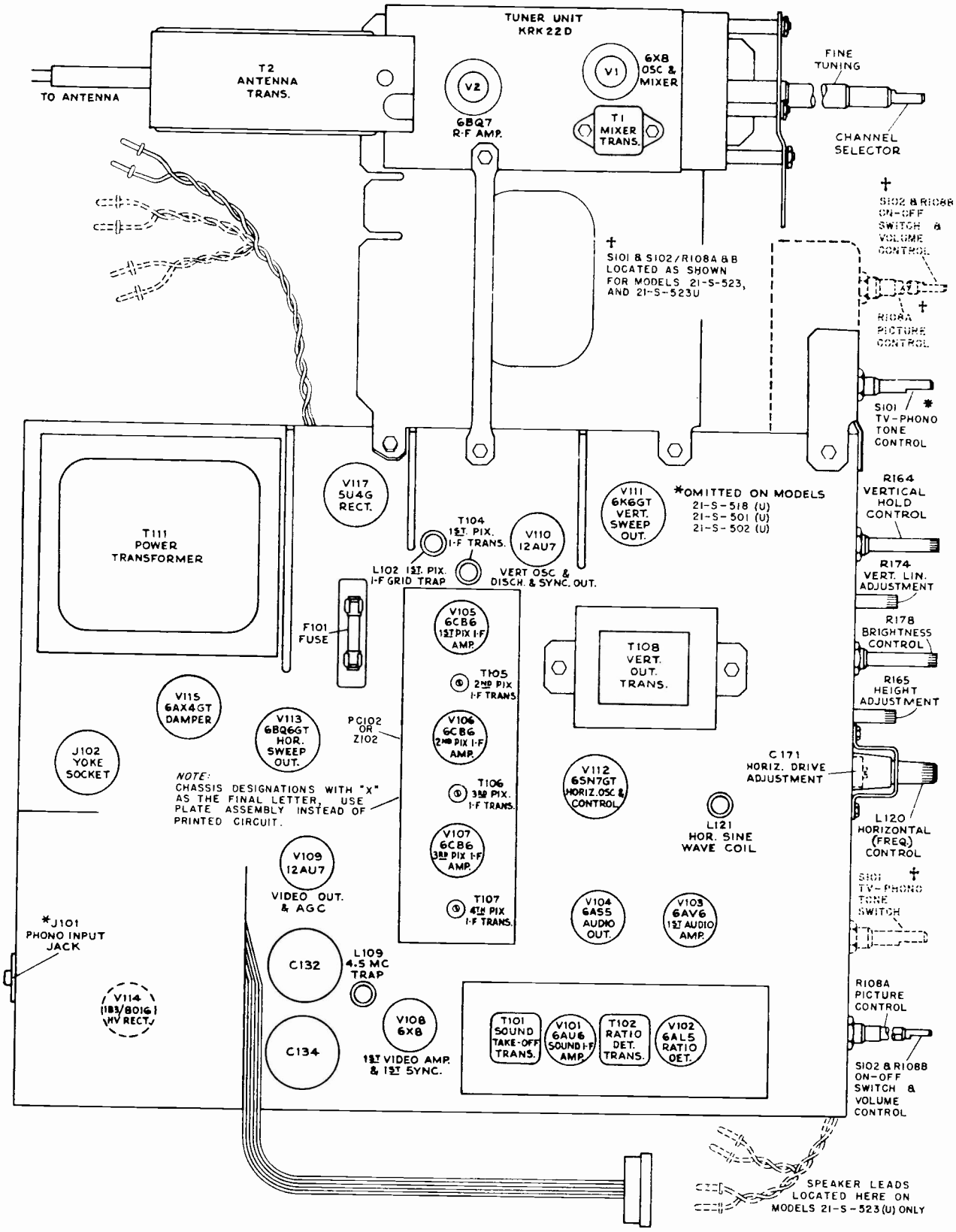

Chassis Top View (shown with KRK22D Tuner)

RAYTHEON MANUFACTURING COMPANY

17T18 and 21T19 CHASSIS

(See list of models on next page, over.)

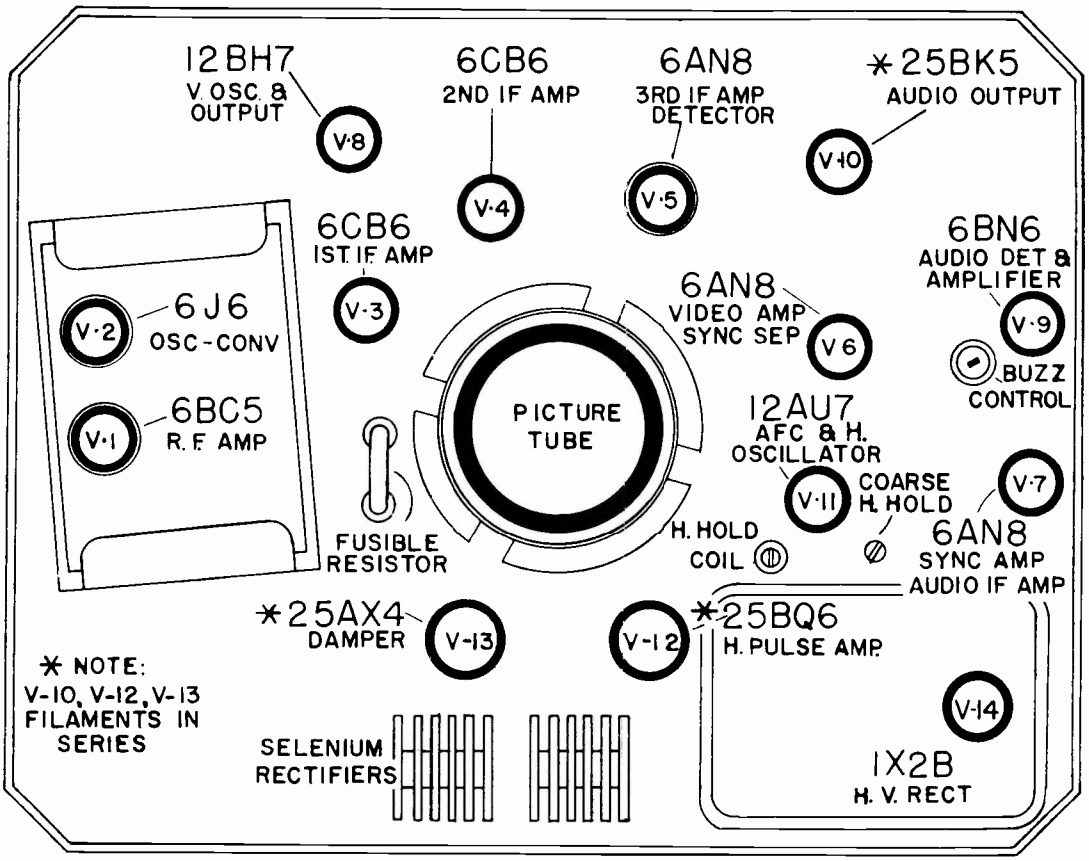

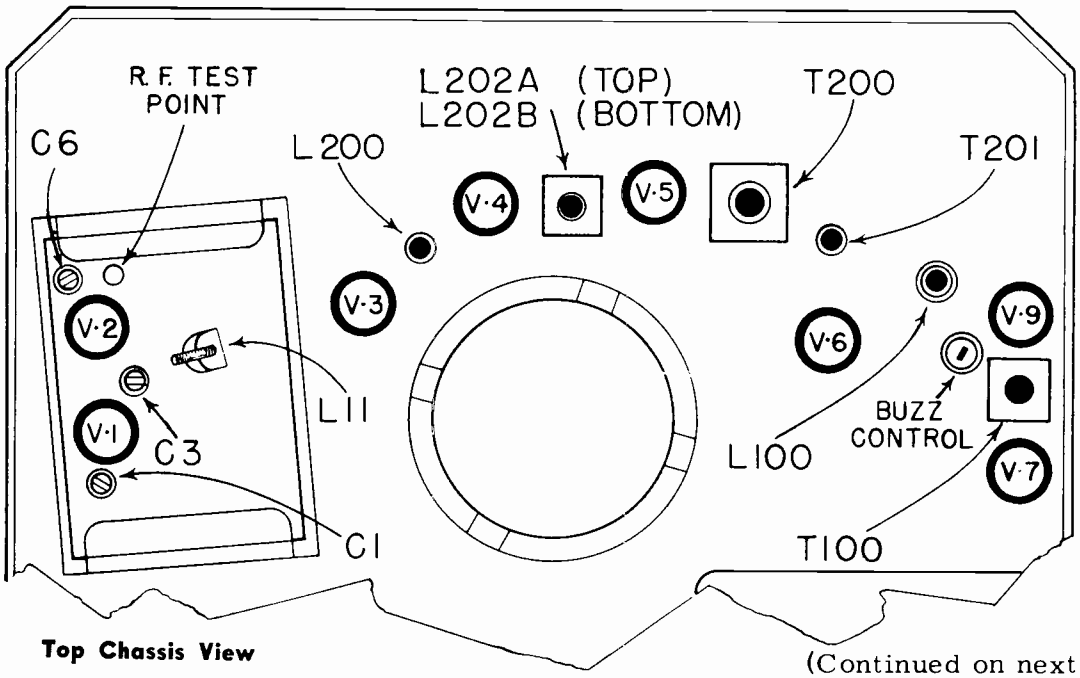

Top Chassis View

(Continued on next 3 pages.)

RAYTHEON

17T18, 21T19 TELEVISION SCHEMATIC DIAGRAM

MODEL	CHASSIS
M-1750A	17T18
M-1750C	17T18
M-1750G	17T18
M-1750K	17T18
M-1751D	17T18
M-1751F	17T18
M-1752E	17T18
M-1752L	17T18
M-2160A	21T19
M-2160C	21T19
M-2160G	21T19
M-2160K	21T19
M-2161D	21T19
M-2161F	21T19
M-2162E	21T19
M-2162L	21T19

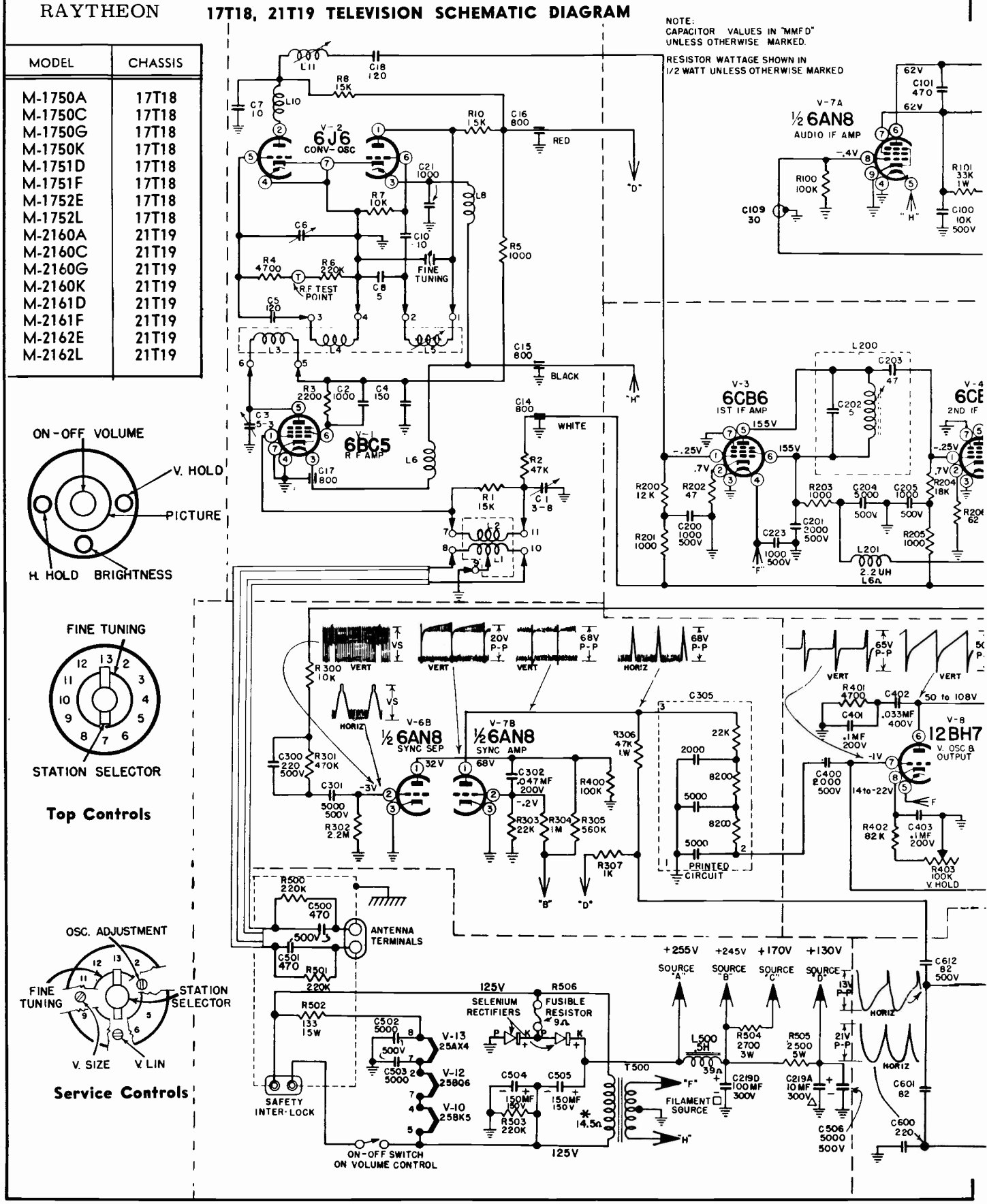

MOST-OFTEN-NEEDED 1955 TELEVISION SERVICING INFORMATION

Raytheon Chassis 17T18 and 21T19

VOLTAGE READINGS TAKEN WITH A V.T.V.M., LINE VOLTAGE 115 V. AC AND THE ANTENNA SHORTED TO CHASSIS.

NOTE: COIL RESISTANCE READINGS NEAR COILS AND TRANSFORMERS WERE TAKEN WITH AN OHMMETER DIRECTLY ACROSS COIL BEING MEASURED EXCEPT THOSE INDICATED BY AN ASTERISK (*), ONE LEAD WAS DISCONNECTED. COILS SHOWN WITHOUT A READING HAVE A RESISTANCE OF LESS THAN ONE OHM.

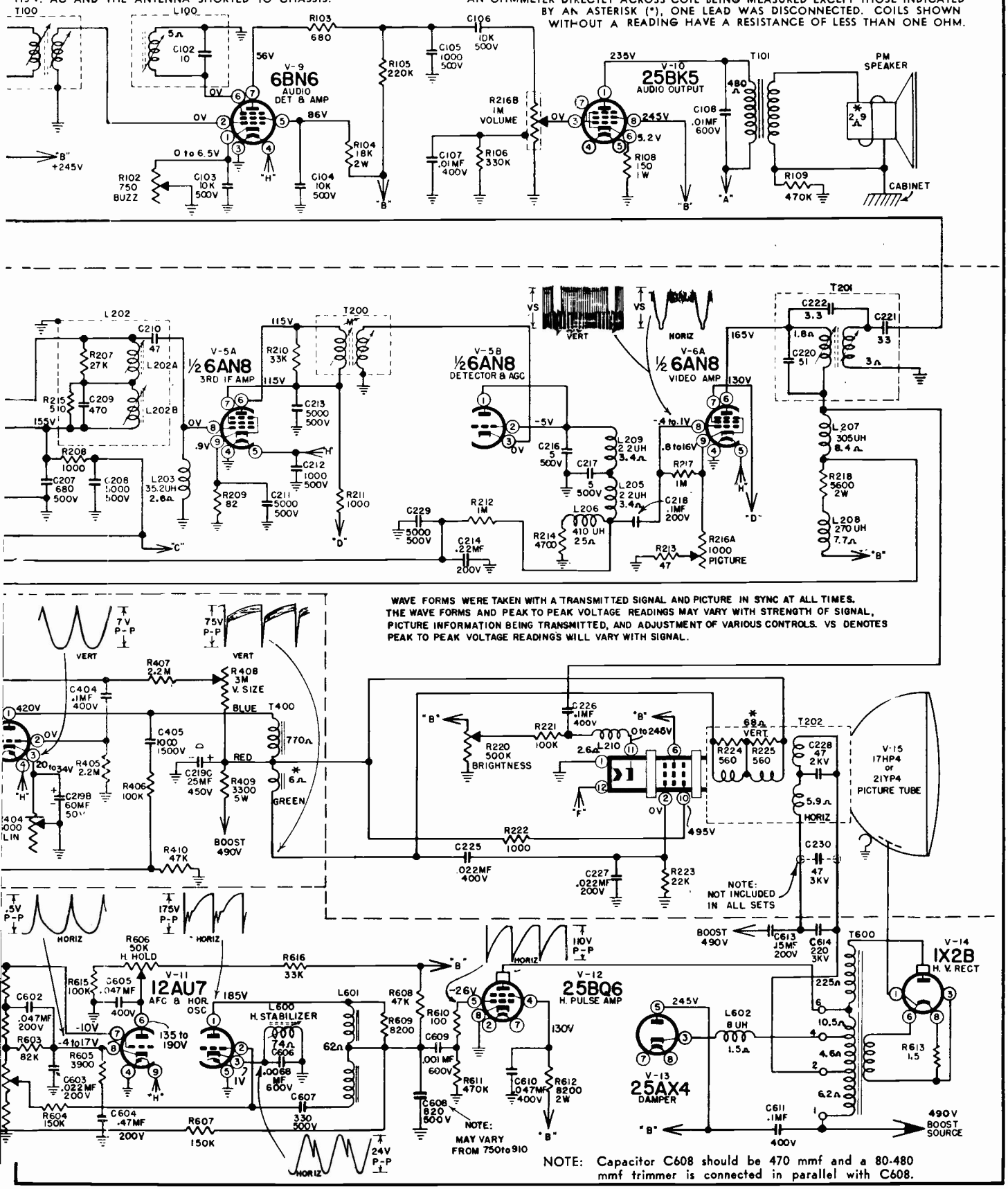

WAVE FORMS WERE TAKEN WITH A TRANSMITTED SIGNAL AND PICTURE IN SYNC AT ALL TIMES. THE WAVE FORMS AND PEAK TO PEAK VOLTAGE READINGS MAY VARY WITH STRENGTH OF SIGNAL, PICTURE INFORMATION BEING TRANSMITTED, AND ADJUSTMENT OF VARIOUS CONTROLS. VS DENOTES PEAK TO PEAK VOLTAGE READINGS WILL VARY WITH SIGNAL.

NOTE: Capacitor C608 should be 470 mmf and a 80-480 mmf trimmer is connected in parallel with C608.

Raytheon Manufacturing Company Chassis 17T18 and 21T19 (continued)

PRE-ALIGNMENT PRECAUTIONS

1. If sweep generator does not have a balanced output, connect a 150 ohm resistor in series with the ground lead and 150 ohms minus the internal resistance of the generator in series with the hot lead.
2. Connect a 1000 mmf capacitor across scope terminals and a 10K ohm resistor in series with hot lead as close to test point as possible.
3. Connect signal generator through a 1000 mmf capacitor.
4. When aligning the IF Amplifier be sure tuner is set to channel 10.

VIDEO IF ALIGNMENT

Step No.	Signal Generator Freq. (mc.)	Sweep Generator Freq (mc.)	Signal Input Point	Output Point	Remarks	Adjust	Response
1	23.9 26.3	25	Pin 8 of V-5A	Scope at IF detector output	Connect short between pin 5 and 6 of V-4	T200 pri. (top) T200 sec. (bot.) Coupling rod	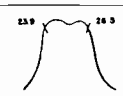
2	Markers should fall 10% down. If response curve is not as shown, readjust coupling rod (bottom T200) for proper bandwidth and T200 primary and secondary for flat response and maximum gain.						
3	21.3	———	Converter grid	VTVM at Pin 8 of V-6A	Remove short. Adjust generator for output of approx. 2 volts DC on VTVM	L202B (bottom core)	Maximum reading
4	26.5	———	Converter grid	VTVM at Pin 8 of V-6A	Adjust generator for output of approx. 2 volts DC on VTVM	L202A (top core)	Maximum reading
5	21.3	———	Converter grid	VTVM at Pin 8 of V-6A	Adjust generator for output of approx. 2 volts DC on VTVM	L202B (bottom core)	Maximum reading
6	24.0	———	Converter grid	VTVM at Pin 8 of V-6A	Adjust generator for output of approx. 2 volts DC on VTVM	L200	Maximum reading
7	25.0	———	Converter grid	VTVM at Pin 8 of V-6A	Adjust generator for output of approx. 2 volts DC on VTVM	L11	Maximum reading
8	———	25	Converter grid	Scope at Pin 8 of V-6A	———	L11	Rock for flat response
9	23.8 26.65	25	Converter grid	Scope at Pin 8 of V-6A	Markers should be 50% down and response curve should be as shown. If not, repeat alignment	Check point only	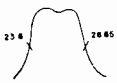

Picture IF frequency 26.75 MC — Sound IF frequency 22.25MC.

NOTE: A very short lead from the generator must be used to prevent regeneration.

SOUND IF ALIGNMENT

Sound Alignment can be performed without test equipment and without removing the picture tube from the chassis.

1. Tune in a TV station and adjust fine tuning until sound bars just appear.
2. Turn T201 primary (furthest from chassis pan) slug all the way out (counter-clockwise).
3. Turn same T201 slug in (clockwise) until the horizontal scanning lines are smooth and continuous.
4. Readjust fine tuning for best picture with adequate sound.
5. Reduce signal strength at antenna terminals by use of an attenuator or similar device until a "hiss" accompanies the sound.
6. Adjust sound pick-off transformer (T201 secondary), interstage transformer (T100), quadrature coil (L-100) and buzz control (R102) for maximum clear sound and minimum buzz.
7. If "hiss" disappears during step 3, further reduce signal strength.

Silvertone

Sears, Roebuck & Co. Chassis 528.271, 528.292, 528.300, and 528.303

Chassis 528.— 271, -1, -2, 271-3, -4	Chassis 528.— 292, -1, 292-2, -3	Television Receiver Cabinet	Chassis 528.— 300, -1, 300-2, -3	Chassis 528.— 303, -1
Catalog Number		Description	Catalog Number	
		Console, Mahogany with Doors	4150E	
		Console, Maple with Doors	4155E	
		Console, Limed Oak with Doors	4153E	
4125	4133	Console, Mahogany, Open Face	4140E	
	4135	Console, Limed Oak, Open Face		
	4127C	Console, Maroon Leatherette		4127D
	4129A	Console, Marlite Mahogany		4129B
	4135B	Console, Masonite, Limed Oak		
4108A	4118B	Table Model, Mahogany		4118C
		Table Model, Limed Oak		4119A
		Table Model, Maroon Leath.		4113B
	4113A	Table Model, Red Leath.		
3104A		Table Model, Black Leath.		4112
3102X	3112X	Table Model, Brown Leath.		
4108		Table Model, Marlite Mahog.		
		Table Model, Masonite Mahog.		5113

Circuit diagram on the next two pages; alignment on the page following the circuit.

All chassis except 528.271, 271-1, 271-2, 271-3, 271-4, 303 and 303-1 contain a 21ZP4, 21" glass picture tube. Chassis 528.271, 271-1, 271-2, 271-3 and 271-4 contain a 17BP4, 17" glass tube, while chassis 528.303 and 303-1 contain a 21WP4, 20-5/8" glass picture tube.

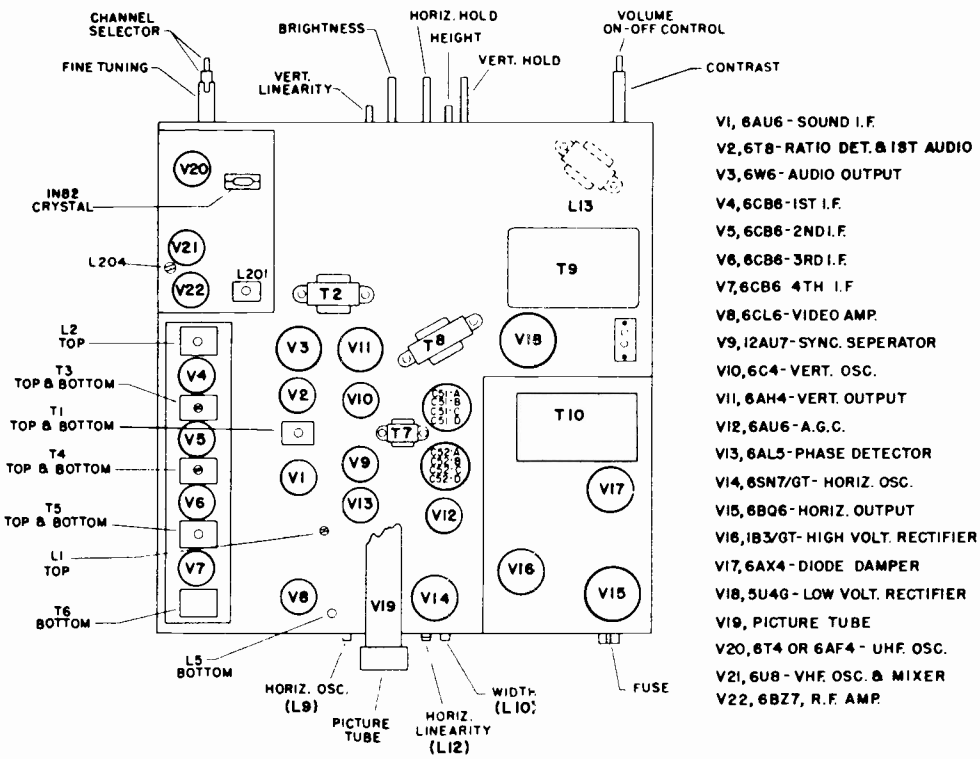

Fig. 2. Top View — All chassis except 528.300, 300-1, 300-2 and 300-3

Sears, Roebuck & Co. Chassis 528.271, 528.292, 528.300, 528.303

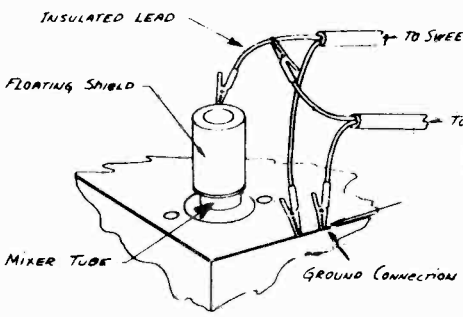

Fig. 7. Test Equipment Connections

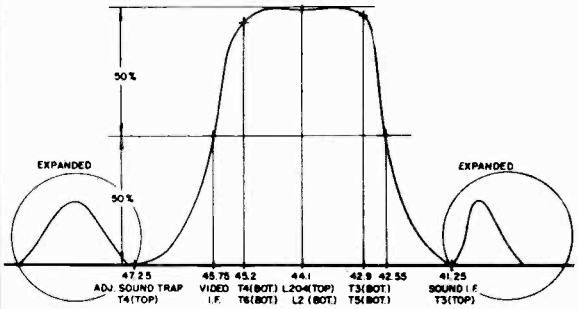

Fig. 6 41 Mc I.F. Response

1. RESISTANCE ARE SHOWN IN OHMS K=1000, MEG.=1,000,000.
2. CAPACITANCE VALUES ARE MFD. UNLESS OTHERWISE NOTED.
3. RESISTANCE VALUES SHOWN ARE WITH PART DISCONNECTED FROM CIRCUIT. ALL RESISTORS 1/2 WATT UNLESS OTHERWISE NOTED.
4. VOLTAGES READ WITH ELECTRONIC VOLTMETER, ANTENNA TERMINALS SHORTED, TUNER ON UNUSED CHANNEL, CONTRAST AND BRILLIANCE AT MINIMUM, -4.5 VOLTS BIAS ON AGC. LINE AT C-24, OTHER CONTROLS AT NORMAL, LINE VOLTAGE 117 VOLTS.
5. ALL WAVE FORMS MEASURED WITH A STRONG SIGNAL INPUT AND WITH CONTRAST SET TO GIVE NORMAL PICTURE. AGC. LINE OPERATING NORMALLY.

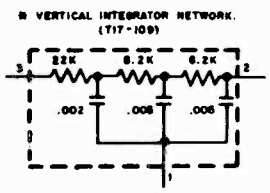

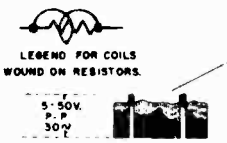

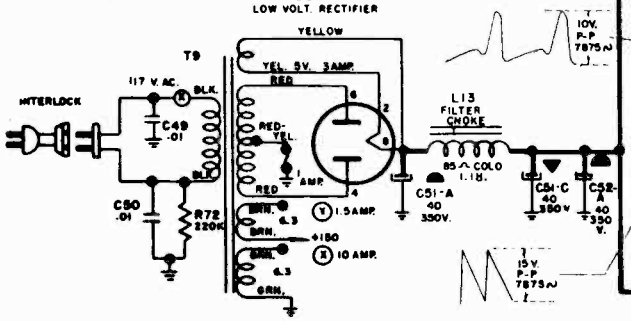

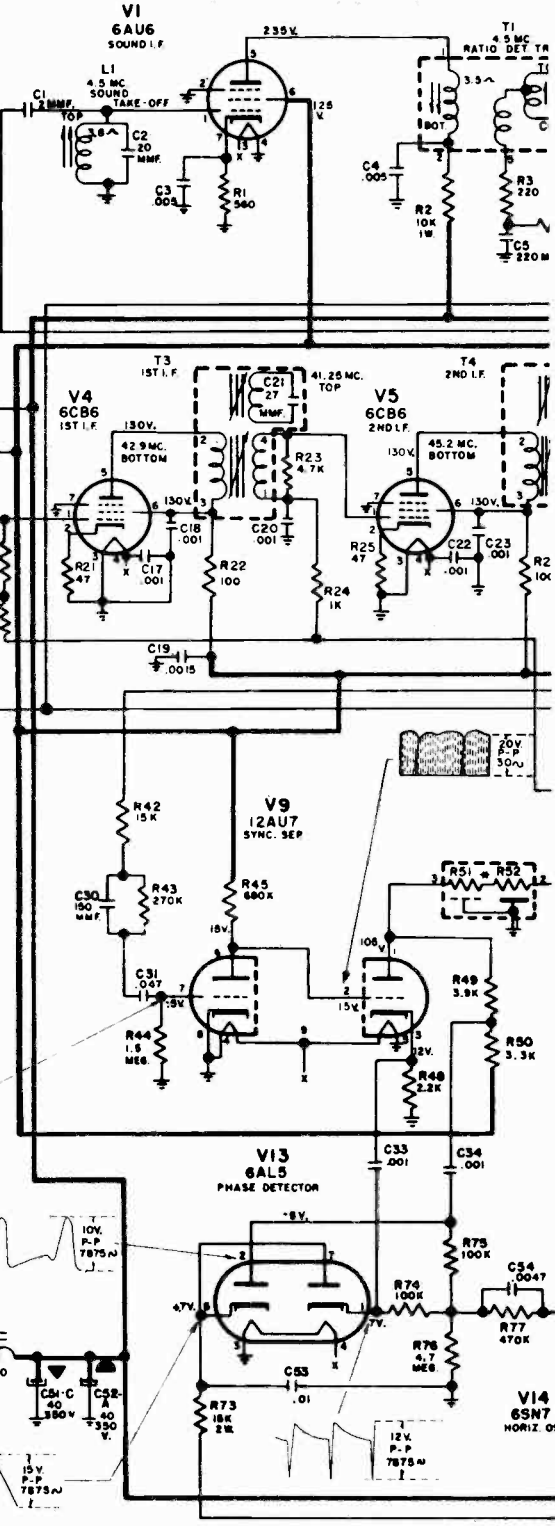

MOST-OFTEN-NEEDED 1955 TELEVISION SERVICING INFORMATION

Sears, Roebuck & Co. Chassis 528,271, 528.292, 528.300, 528.303

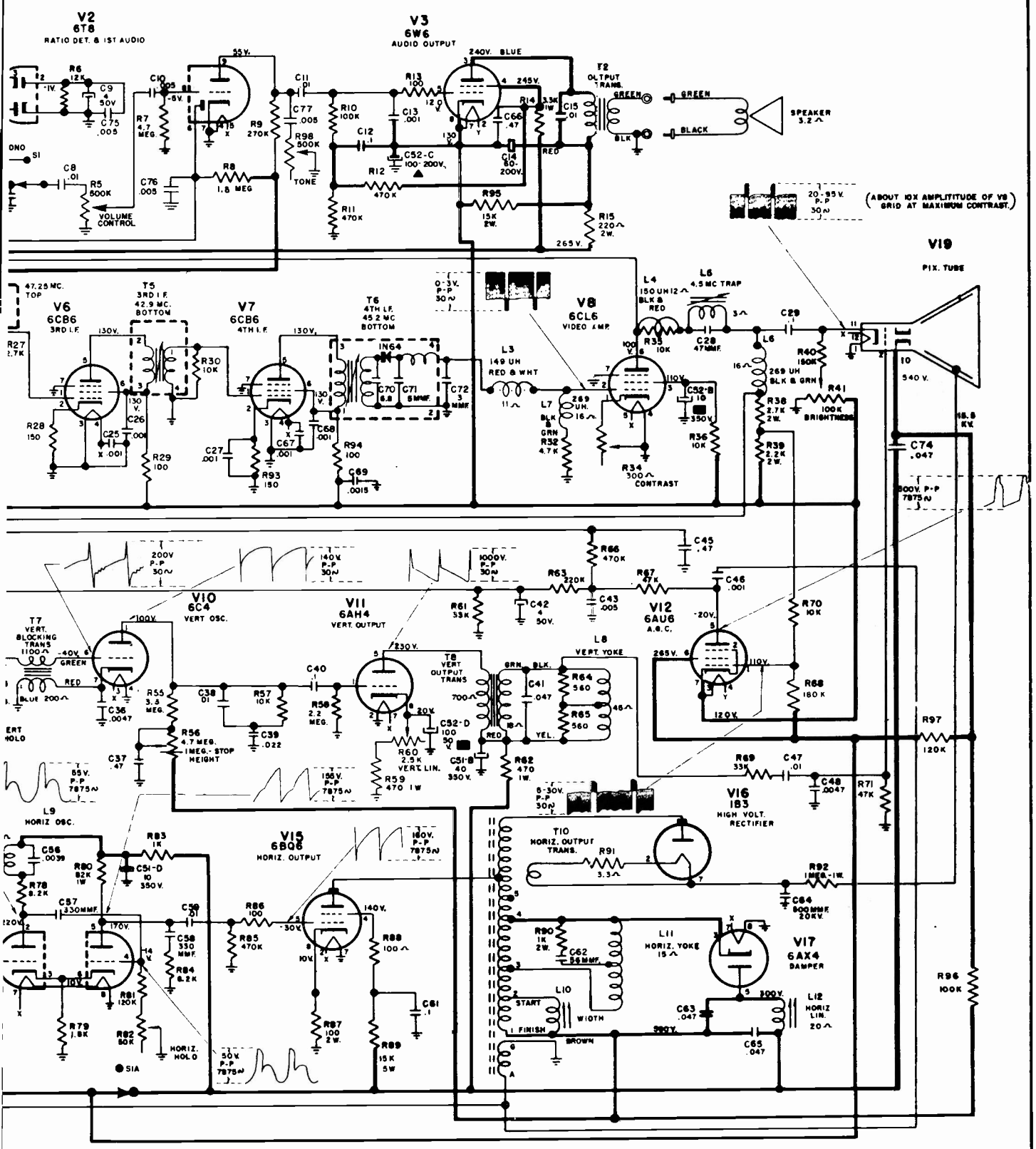

Sears, Roebuck & Co. Chassis 528.271, 528.292, 528.300, 528.303, continued.

TELEVISION ALIGNMENT PROCEDURE

PRELIMINARY

Alignment is an exacting procedure and should be undertaken only when necessary. The following equipment is required for alignment work.

1. Signal generator, with an output of at least 1 volt maximum. Crystal controlled or calibrated markers for the sound (41.25 Mc) and picture (45.75 Mc) IF carriers are required in addition to the following variable frequencies.

4.5 Mc	Intercarrier Sound IF
41.25 Mc	Sound IF Trap (T-3, top)
42.9 Mc	1st & 3rd I.F. (T-3, bottom; T-5 bottom)
44.1 Mc	Converter and I.F. input (L-2 bottom; L204 Top)
45.2 Mc	2nd & 4th I.F. (T-4 bottom; T-6 bottom)
47.25 Mc	Adjacent Sound Trap (T-4 Top)

2. Electronic voltmeter (VTVM)
3. R.F. sweep generator with a frequency range of 40 to 220 Mc with a sweep width of at least 10 Mc, having an adjustable output of at least 0.1 volts.
4. Cathode ray oscilloscope, preferably with a wide band vertical amplifier and an input calibrating source.

VIDEO IF ALIGNMENT

Step	Signal Generator Frequency	Signal Generator Connect to	Output Indicator	Connect to	Adjust	Remarks
1	42.9 Mc	Floating shield on mixer tube, V-21	VTVM	Junction of R32 and L7	T3 Bottom for maximum reading	Apply —4.5 volt bias to AGC line, — side to C-42, + side to chassis. Short antenna terminals, set channel selector to unused channel free of harmonics or other interference. Adjust signal generator to give reading of approximately 2.5 volts on VTVM. On all "maximum" adjustments reduce generator output so that VTVM reading does not exceed 2.5 volts. On minimum adjustments increase generator output to provide definite dip on meter.
2	42.9 Mc	Same	Same	Same	T5 Bottom for maximum reading	
3	45.2 Mc	Same	Same	Same	T4 Bottom for maximum reading	
4	45.2 Mc	Same	Same	Same	T6 Bottom for maximum reading	
5	41.25 Mc	Same	Same	Same	T3 Top for minimum reading	
6	47.25 Mc	Same	Same	Same	T4 Top for minimum reading	
7	42.9 Mc	Same	Same	Same	T3 Bottom for maximum reading	
8	45.2 Mc	Same	Same	Same	T4 Bottom for maximum reading	
9	44.1 Mc	Same	Same	Same	L2 Bottom for maximum reading	
10	44.1 Mc	Same	Same	Same	L204 Top for maximum reading	
11	Sweep 44 Mc, 10 Mc Sweep, Marker to freqs. in Fig. 6	See Fig. 7	Oscilloscope	Vertical terminals to junction of R32 and L7. Horizontal terminals to sweep Gen.	T6 for 45.75 Mc 50% position. L2 for correct tilt. See Fig. 4 for correct wave form	When sweeping overall pattern do not exceed 2 volts P-P (or approximately .3 volts D.C. at detector load resistor) to avoid overload and distortion of response curve.

SOUND ALIGNMENT

Step	Signal Generator Frequency	Signal Generator Connect to	Output Indicator	Connect to	Adjust	Remarks
1	4.5 Mc	Junction of R32 and L7	VTVM	See Note 1	L1 Bottom for maximum reading, T1 Bottom for maximum reading	Signal generator output below .1 volts, VTVM on low range (0-3 volts).
2	4.5 Mc	Same	Same	Junction of R4 and C7	T1 Top for zero (mid-scale)	
3	4.5 Mc	Junction of C29 and R40	Same	See Note 1	L5 for minimum reading	This adjusts the 4.5 Mc sound trap. For field adjustment see Note 2.

NOTE 1. Connect two 100K ohm matched resistors in series between Pin 2 of V2 (6T8) and ground. Connect negative lead of VTVM to the junction of the two resistors and the positive lead to junction of R4 and C7.

NOTE 2. As a field adjustment, the 4.5 Mc trap (L5) may be set on a signal by adjusting L5 for a minimum amount of graininess in the picture. This interference can be described as a moving, shadowy, bead-like appearance in the picture which is caused by a break-up at extremely close intervals of the horizontal lines. This is most easily seen in the neutral grey shades in the raster.

Sentinel

SENTINEL RADIO CORPORATION

(Material below and continued on the next five pages)

MODELS

1U-701	1U-755
1U-711	1U-758
1U-714	1U-762
1U-721	1U-765
1U-724	1U-768
1U-752	1U-791

WHEN REPLACING PICTURE TUBE ALWAYS HAVE FACE OF TUBE TIGHT AGAINST RUBBER STOPS

ADJUSTMENT PROCEDURE FOR DEFLECTION YOKE, ION TRAP, HORIZONTAL AND VERTICAL CENTERING, CORNER SHADOW, AND PICTURE TUBE ALIGNMENT.

SOME 21" MODELS USE ELECTRO-MAGNETIC FOCUS PICTURE TUBES. ADJUST FOCUS BY TURNING FOCUS STEM FOR BEST DEFINITION.

CORNER SHADOW, VERTICAL AND HORIZONTAL CENTERING—

Adjust the Centering Tab, part of the focus magnet assembly, so that pattern is centered both Horizontally and Vertically.
Additional centering can be obtained by loosening the 2 wing nuts and moving the complete focus magnet assembly.

Always re-adjust the ion trap if focus magnet assembly has been moved.

REPOSITIONING LOOSE OR REPLACED PICTURE TUBE

This rubber gasket around edge of Deflection Yoke mounting bracket supports the picture tube. It should always be pressing very firmly against the bell of the tube, otherwise the picture tube may move and cause corner shadow or shifting of pattern on screen.
To position loosen the Deflection Yoke mounting screw "A" and 2 wing nuts "B" and the 4 screws "C". Push the complete Bracket Assembly forward so that the rubber gasket fits snugly around bell of picture tube. Tighten the 4 screws "C" firmly. IF the foregoing procedures have been followed correct'y the picture tube should now be held firmly in place. Gently push the deflection yoke forward and tighten the 2 wing nuts "B". Before tightening screw "A" make sure that pattern is not tilted.

VERTICAL AND HORIZONTAL CENTERING

Adjust the two centering rings located on the back of the Deflection Yoke assembly so that pattern is centered both horizontally and vertically.

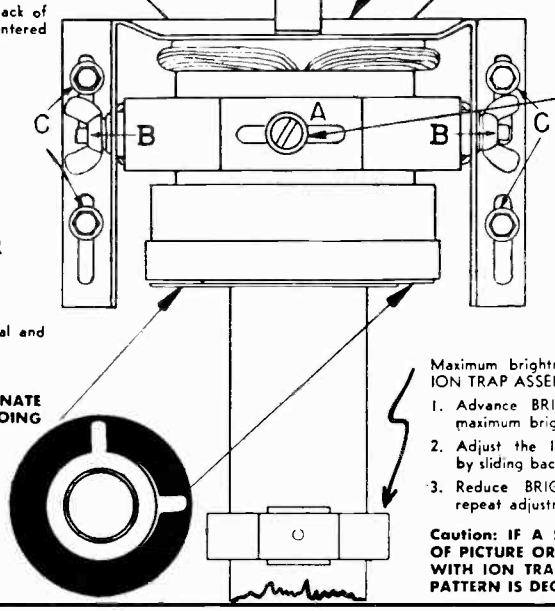

STRAIGHTENING TILTED PATTERN

If Pattern is tilted on screen, adjust Deflection Yoke position by—

1. Loosen yoke-locking screw (A).
2. Straighten pattern on screen by sliding locking screw to right or left.
3. Lock yoke in proper position by firmly tightening screw.

ELIMINATING SEMI-CIRCULAR CORNER SHADOW OF PATTERN OR PICTURE

Use same procedure as listed above on horizontal and vertical centering.

Caution: DO NOT USE ION TRAP TO ELIMINATE CORNER SHADOW OF PATTERN IF BY SO DOING THE INTENSITY OF RASTER IS DECREASED.

ION TRAP ASSEMBLY

Maximum brightness will be determined by the position of the ION TRAP ASSEMBLY:

1. Advance BRIGHTNESS CONTROL on front of chassis to maximum brightness position.
2. Adjust the ION TRAP ASSEMBLY for maximum brightness by sliding back and forth and rotating to right or left.
3. Reduce BRIGHTNESS with BRIGHTNESS CONTROL and repeat adjustment of ION TRAP for best positioning.

Caution: IF A SEMI-CIRCULAR SHADOW AROUND CORNER OF PICTURE OR PATTERN IS OBTAINED, DO NOT ELIMINATE WITH ION TRAP, IF BY SO DOING THE INTENSITY OF THE PATTERN IS DECREASED.

Sentinel Models 1U-701, 1U-711, etc. (Continued)

RATIO DETECTOR AND SOUND I-F ALIGNMENT

In most cases only the secondary of the ratio detector coil will require adjustment. This can be done simply by adjusting the top adjustment screw of the ratio detector for minimum buzz with the sound carrier of a TV station. For complete alignment use steps 1, 2, and 3 in the alignment table.

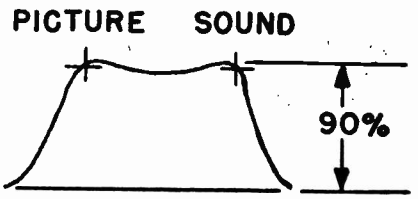

FIG. 4

VHF ALIGNMENT TABLE

RATIO DETECTOR AND SOUND ALIGNMENT

Step No.	Connect Signal Generator to	Sig. Gen. Freq.	Connect Voltmeter to	Miscellaneous Instructions	Adjust
1	In series with .001 Mfd. Cond. to junction of L-15 and L-16. See fig. 6	4.5 MC.	In series with 47,000 ohm res. across C-66 a 10 Mfd. cond. See fig. 6	Maintain reading on 10 volt scale contrast at maximum. Remove 3rd video IF tube 6CB6.	T-15 (top) and T-16 (bottom) for max. reading. See fig. 5 & 6
2	In series with .001 Mfd. Cond. to junction of L-15 and L-16. See fig. 6	4.5 MC.	In series with 47,000 ohm res. to junction of R-60 and C-69 See fig. 6	Maintain reading on 10 volt scale contrast at maximum. Remove 3rd video IF tube 6CB6.	T-16 (top) for zero reading. See fig. 5
3	In series with .001 Mfd. Cond. to cathode of picture tube yellow lead. See fig. 6	4.5 MC.	In series with 47,000 ohm res. across C-66 a 10 Mfd. cond. See fig. 6	Maintain reading on low volt scale. Remove 3rd video IF tube 6CB6.	T-14 (top) for minimum reading. See fig. 5

NOTE 1: For **minimum buzz** always adjust T-16 (top) with the sound carrier of a TV station.
NOTE 2: Alternate 4.5 MC. trap alignment: Adjust T-14 (top) for minimum 4.5 MC. beat on picture with a strong station signal.

PICTURE I-F ALIGNMENT

Step No.	Connect Signal Generator to	Sig. Gen. Freq.	Connect Voltmeter to	Miscellaneous Instructions	Adjust
4	Ungrounded converter tube (6U8) shield	44.0 MC.	In series with 47,000 ohm res. to junction of R-46 and L-16. See fig. 6	Tuner on channel 3, 3 volts bias across C-49 positive side to ground. Locality switch in strong position. See fig. 6	T-13 (top) for maximum reading. See fig. 5
5	Ungrounded converter tube (6U8) shield	43.2 MC.	In series with 47,000 ohm res. to junction of R-46 and L-16. See fig. 6	Tuner on channel 3, 3 volts bias across C-49 positive side to ground. Locality switch in strong position. See fig. 6	T-12 (top) for maximum reading. See fig. 5
6	Ungrounded converter tube (6U8) shield	41.25 MC.	In series with 47,000 ohm res. to junction of R-46 and L-16. See fig. 6	Tuner on channel 3, 3 volts bias across C-49 positive side to ground. Locality switch in strong position. See fig. 6 Repeat Steps 5 & 6	T-12 (bottom) for minimum reading. See fig. 6
7	Ungrounded converter tube (6U8) shield	45.4 MC.	In series with 47,000 ohm res. to junction of R-46 and L-16. See fig. 6	Tuner on channel 3, 3 volts bias across C-49 positive side to ground. Locality switch in strong position. See fig. 6	T-11 (top) for maximum reading. See fig. 5
8	Ungrounded converter tube (6U8) shield	47.25 MC.	In series with 47,000 ohm res. to junction of R-46 and L-16. See fig. 6	Tuner on channel 3, 3 volts bias across C-49 positive side to ground. Locality switch in strong position. See fig. 6 Repeat Steps 7 & 8	T-11 (bottom) for minimum reading. See fig. 6
9	Ungrounded converter tube (6U8) shield	44.5 MC.	In series with 47,000 ohm res. to junction of R-46 and L-16. See fig. 6	Tuner on channel 3, 3 volts bias across C-49 positive side to ground. Locality switch in strong position. See fig. 6 **NOTE:** Detune T-10 by turning slug out as far as possible.	T-1 (top) for maximum reading. See fig. 5
10	Ungrounded converter tube (6U8) shield	45.75 MC.	In series with 47,000 ohm res. to junction of R-46 and L-16. See fig. 6	Tuner on channel 3, 3 volts bias across C-49 positive side to position. See fig. 6	T-10 (top) for maximum reading. See fig. 5

NOTE 3: For visual check of IF response curve (see fig. 3) connect signal and sweep generator to ungrounded converter tube shield (6J6). Connect oscilloscope in series with 47,000 ohm resistor to junction of R-46 and L-16.

Sentinel Models 1U-701, 1U-711, 1U-714, 1U-721, 1U-724, 1U-752, etc. (Continued)

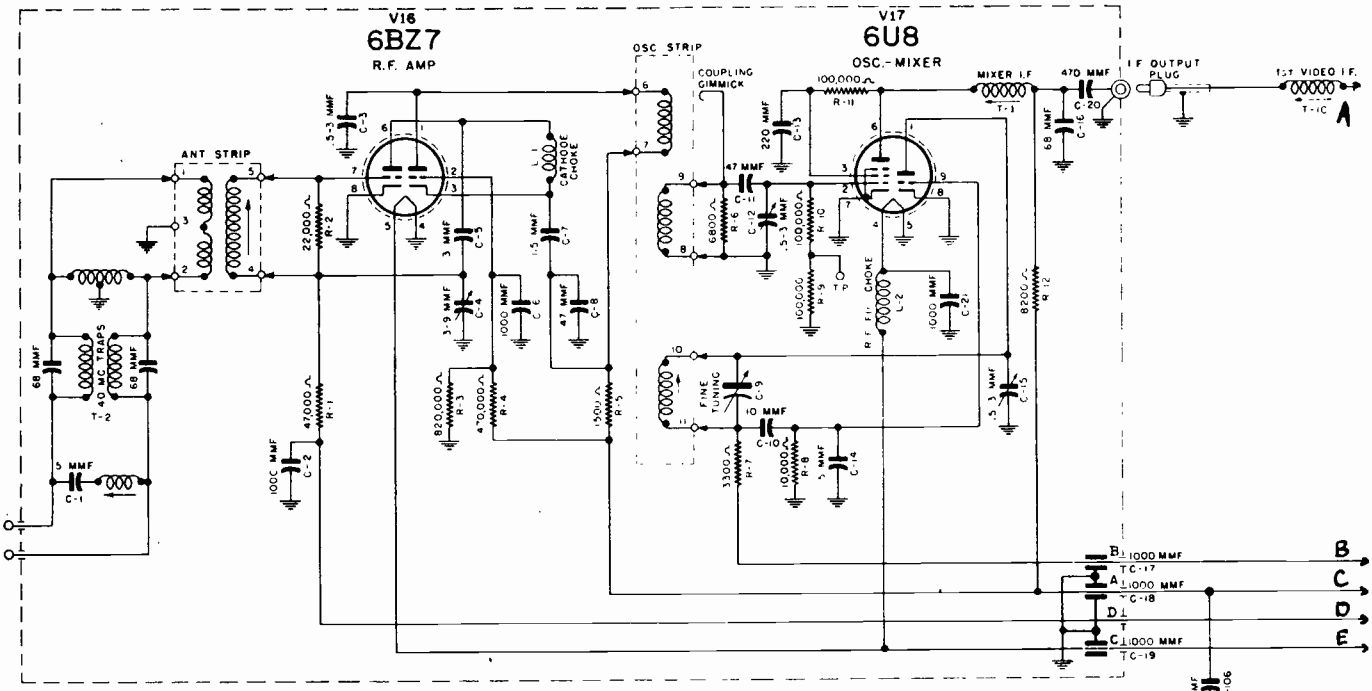

Terminals A to E connect to main circuit on next page.

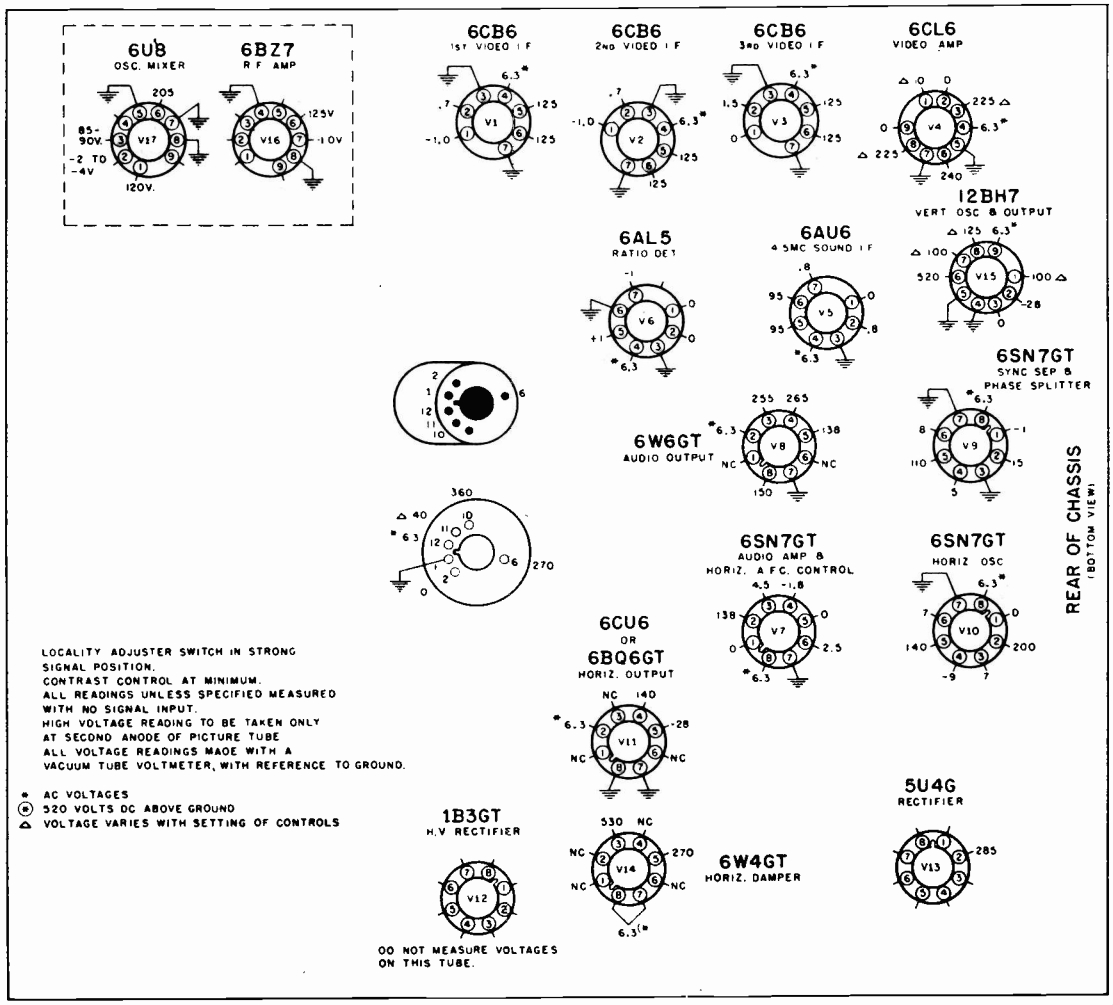

Terminals A to E connect to corresponding terminals of tuner circuit printed on the preceding page.

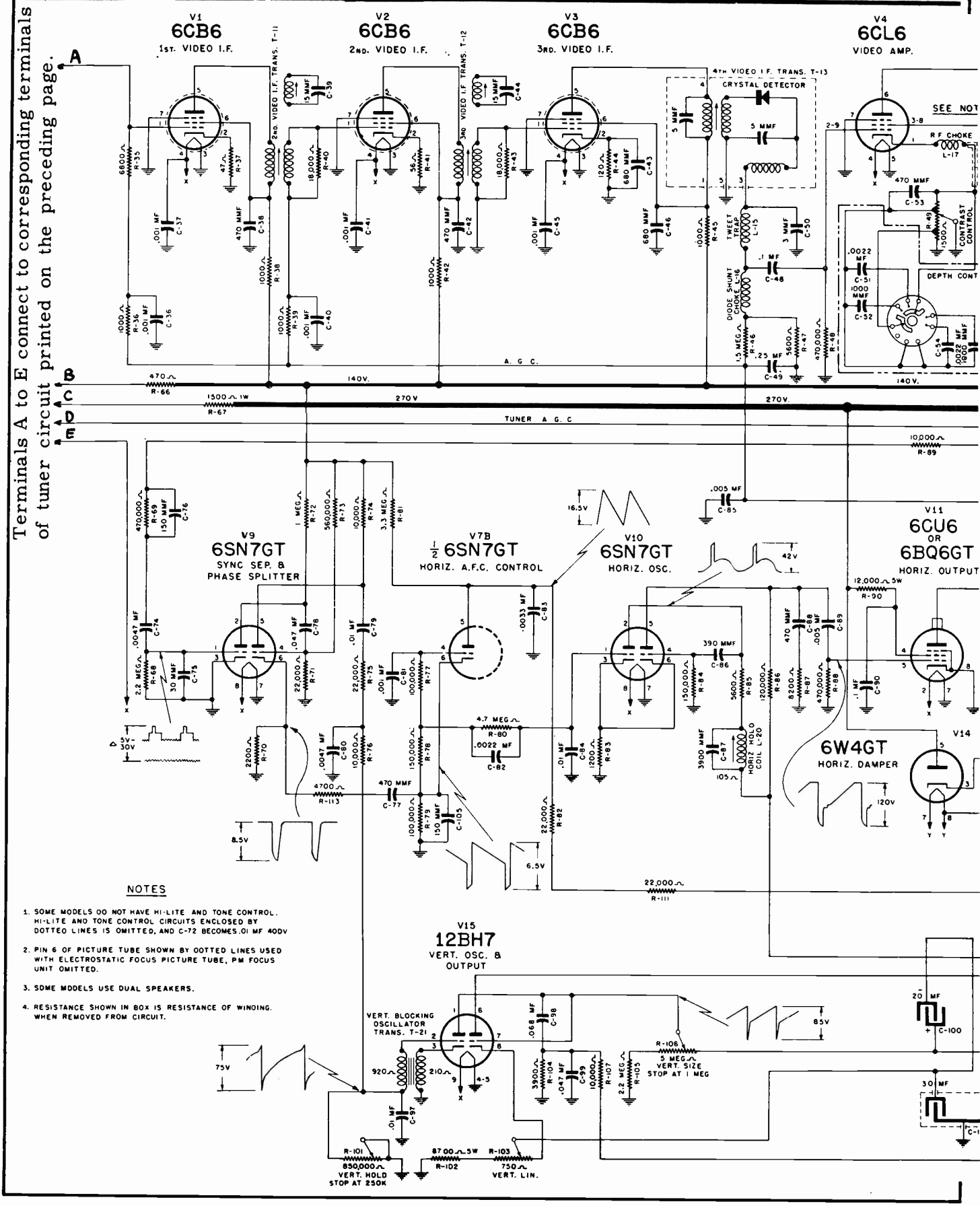

NOTES

1. SOME MODELS DO NOT HAVE HI-LITE AND TONE CONTROL. HI-LITE AND TONE CONTROL CIRCUITS ENCLOSED BY DOTTED LINES IS OMITTED, AND C-72 BECOMES .01 MF 400V
2. PIN 6 OF PICTURE TUBE SHOWN BY DOTTED LINES USED WITH ELECTROSTATIC FOCUS PICTURE TUBE, PM FOCUS UNIT OMITTED.
3. SOME MODELS USE DUAL SPEAKERS.
4. RESISTANCE SHOWN IN BOX IS RESISTANCE OF WINDING. WHEN REMOVED FROM CIRCUIT.

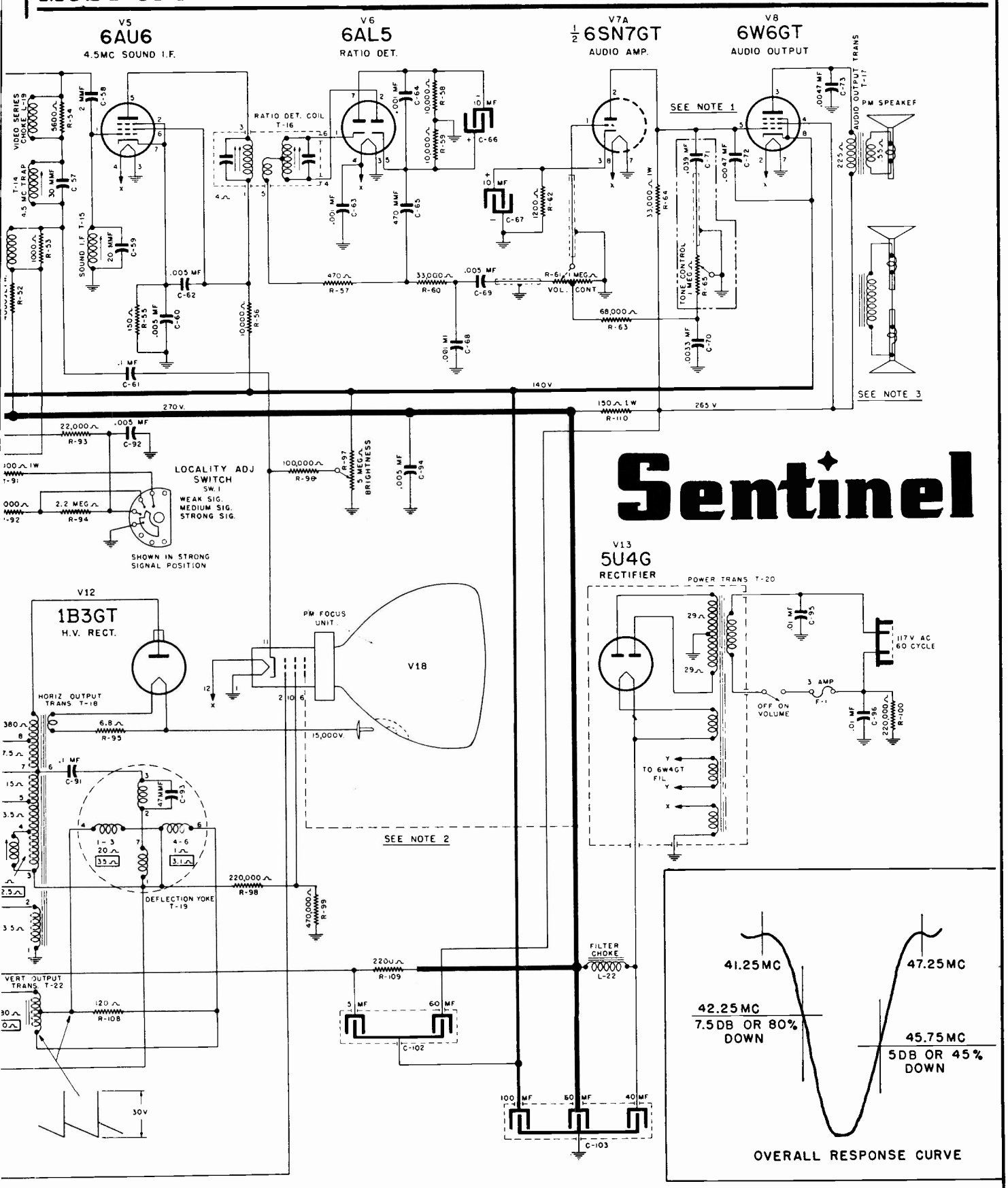
V5
6AU6
4.5MC SOUND I.F.
V6
6AL5
RATIO DET.
V7A
½ 6SN7GT
AUDIO AMP.
V8
6W6GT
AUDIO OUTPUT
RATIO DET. COIL T-16
SEE NOTE 1
PM SPEAKER
AUDIO OUTPUT TRANS T-17
VIDEO SERIES CHOKE L-19
4.5 MC TRAP T-14
SOUND I.F. T-15
TONE CONTROL 1 MEG
VOL. CONT
140V
270V.
265 V
SEE NOTE 3
LOCALITY ADJ SWITCH SW. 1
WEAK SIG.
MEDIUM SIG.
STRONG SIG.
SHOWN IN STRONG SIGNAL POSITION
BRIGHTNESS
Sentinel
V13
5U4G
RECTIFIER
POWER TRANS T-20
117 V AC 60 CYCLE
3 AMP
OFF ON VOLUME
TO 6W4GT FIL
V12
1B3GT
H.V. RECT.
PM FOCUS UNIT
V18
HORIZ OUTPUT TRANS T-18
15,000V.
SEE NOTE 2
DEFLECTION YOKE T-19
VERT OUTPUT TRANS T-22
FILTER CHOKE L-22
30V
41.25MC
47.25MC
42.25MC
7.5DB OR 80% DOWN
45.75MC
5DB OR 45% DOWN
OVERALL RESPONSE CURVE

FIG. 3

Sentinel **TRIMMER LOCATION AND ALIGNMENT CONNECTION POINTS** (Continued)

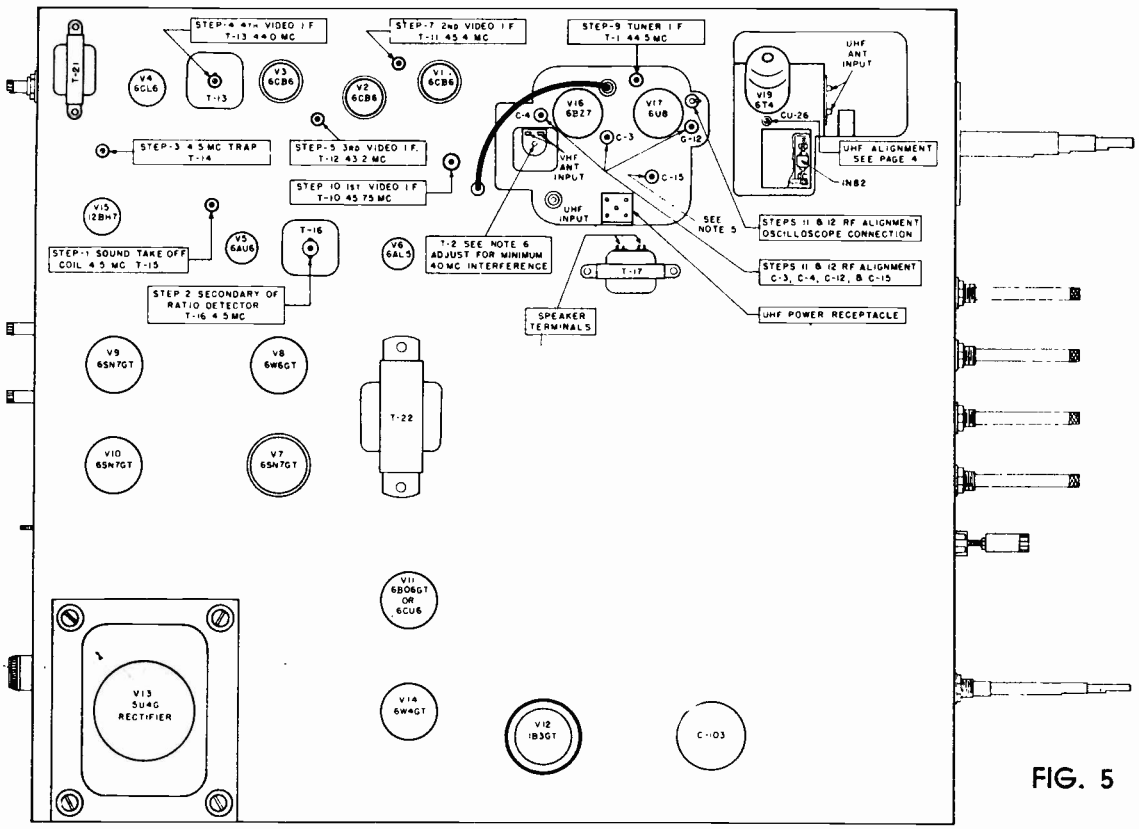

FIG. 5

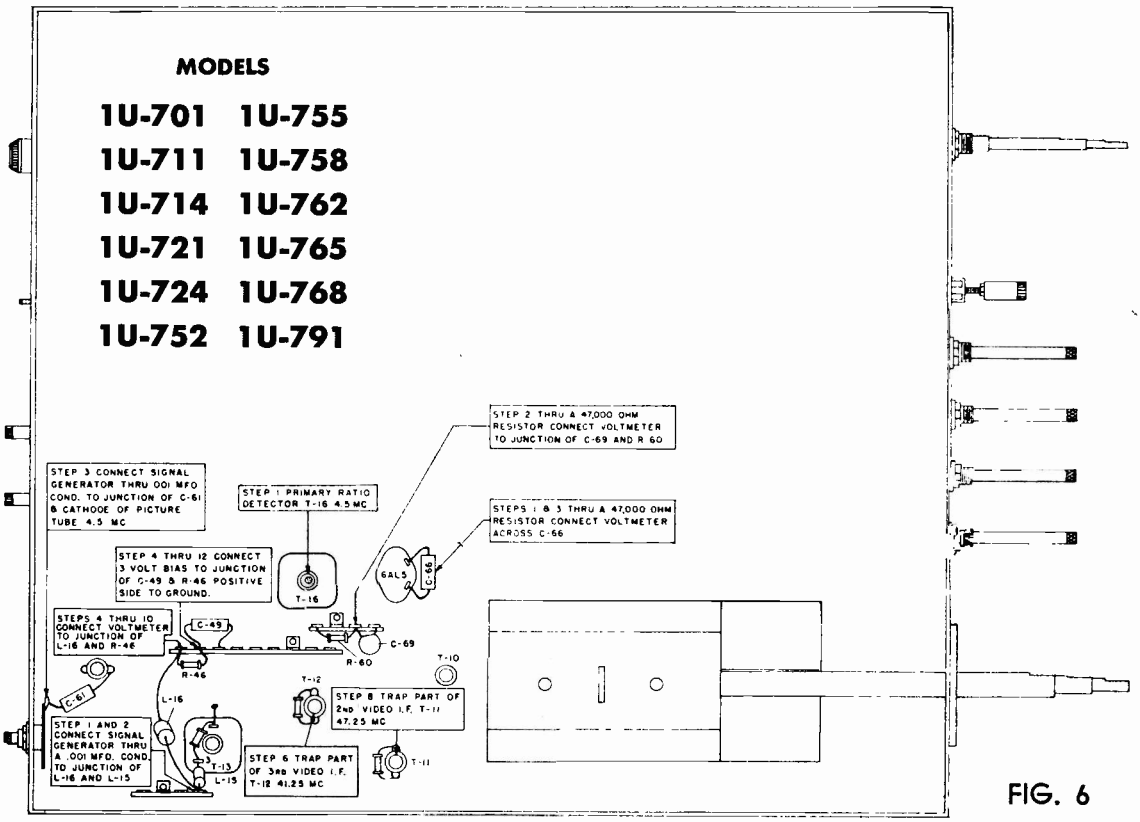

FIG. 6

Sentinel

MODELS

1U-901 1U-921
1U-911 1U-924
1U-914 1U-991

See pages 146-147 for circuit diagram, and page 148 for alignment.

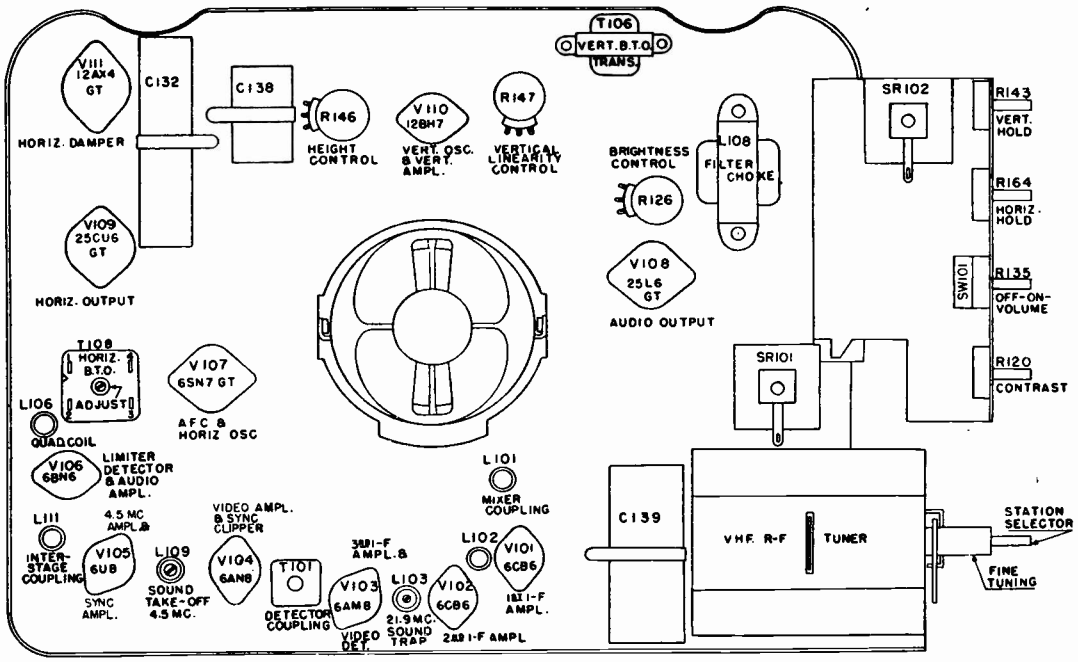

FRONT VIEW OF CHASSIS

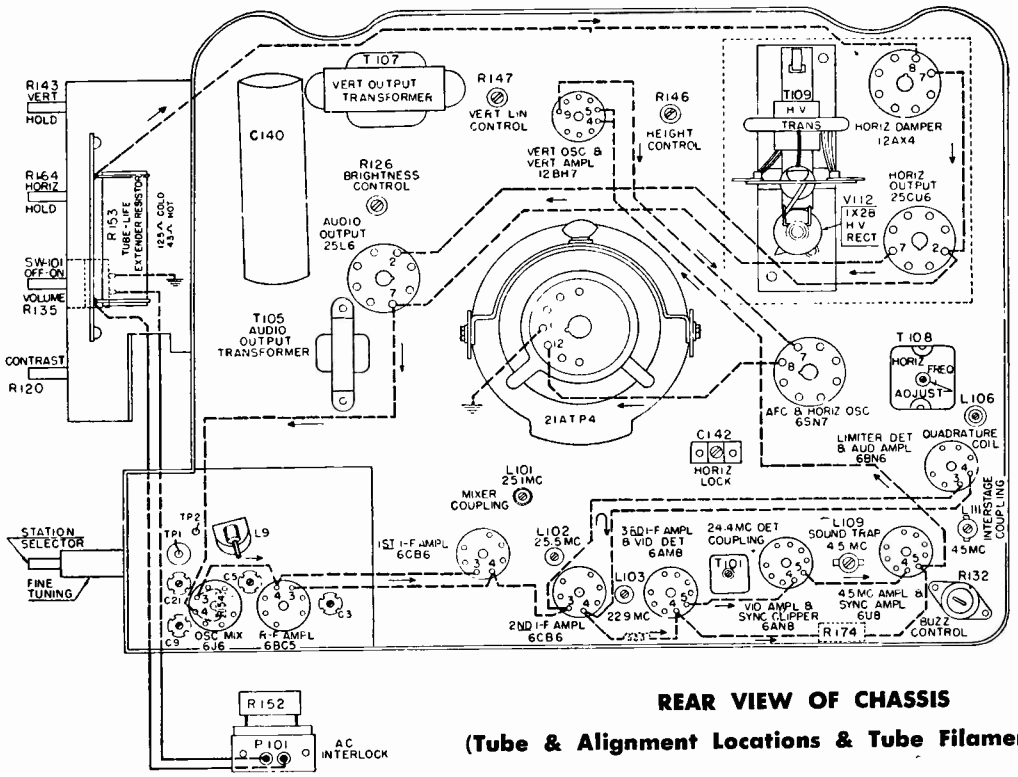

REAR VIEW OF CHASSIS

(Tube & Alignment Locations & Tube Filament Wiring)

SENTINEL RADIO CORP.

REMOVING CABINET FROM CABINET BASE (TABLE MODELS ONLY)

1. Remove all control knobs and cabinet back.
2. Remove antenna terminal plate from cabinet and disconnect speaker leads.
3. Place cabinet face down on a soft clean cloth.
4. Remove ONLY the cabinet mounting screws located under and on the outer edges of cabinet base. DO NOT REMOVE CHASSIS MOUNTING SCREWS. Remove the 2 wood screws from the lower rear corner support braces of cabinet.
5. Carefully guide cabinet and cabinet base to its normal upright position. Remove cabinet by lifting straight up.

REMOVING CHASSIS BASE FROM CONSOLE CABINETS

1. Remove all knobs and cabinet back.
2. Remove antenna terminal plate from cabinet and disconnect speaker leads.
3. Remove the screws under guide rails of chassis base and the one screw under center support bridge.
4. Slide chassis base out.

MODELS

1U-901 1U-921

1U-911 1U-924

1U-914 1U-991

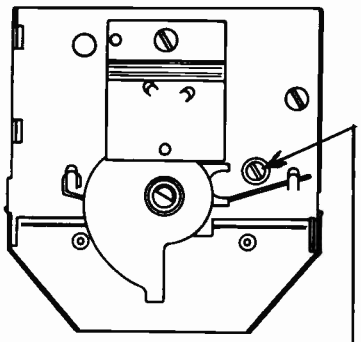

THE PROPER ADJ. SCREW FOR THE CHANNEL TUNED TO WILL APPEAR HERE.

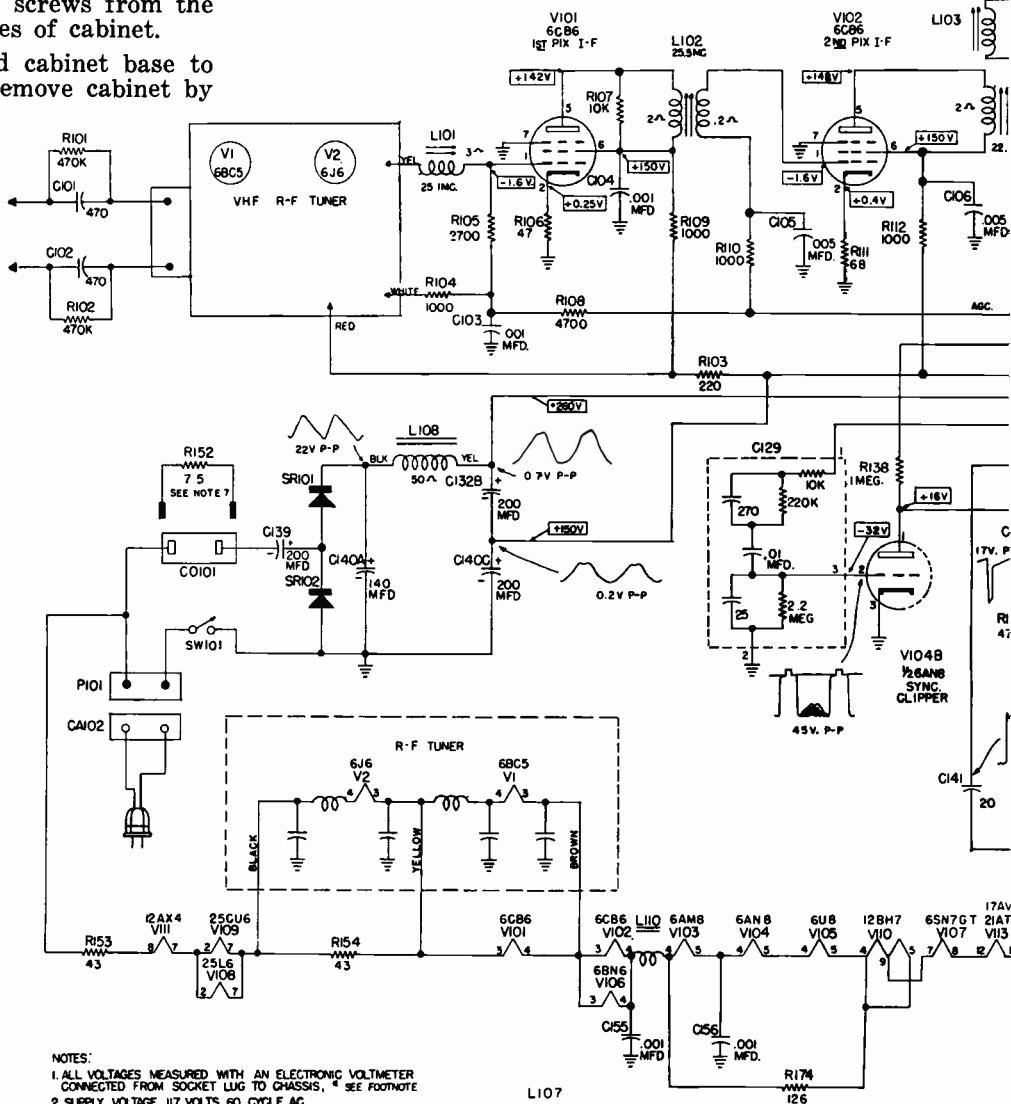

Provide markers as shown on curve.

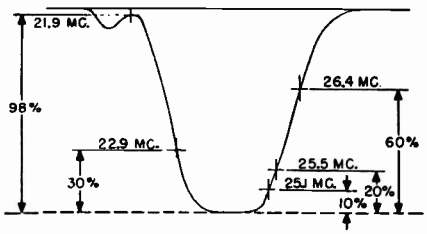

NOMINAL OVERALL I-F RESPONSE CURVE

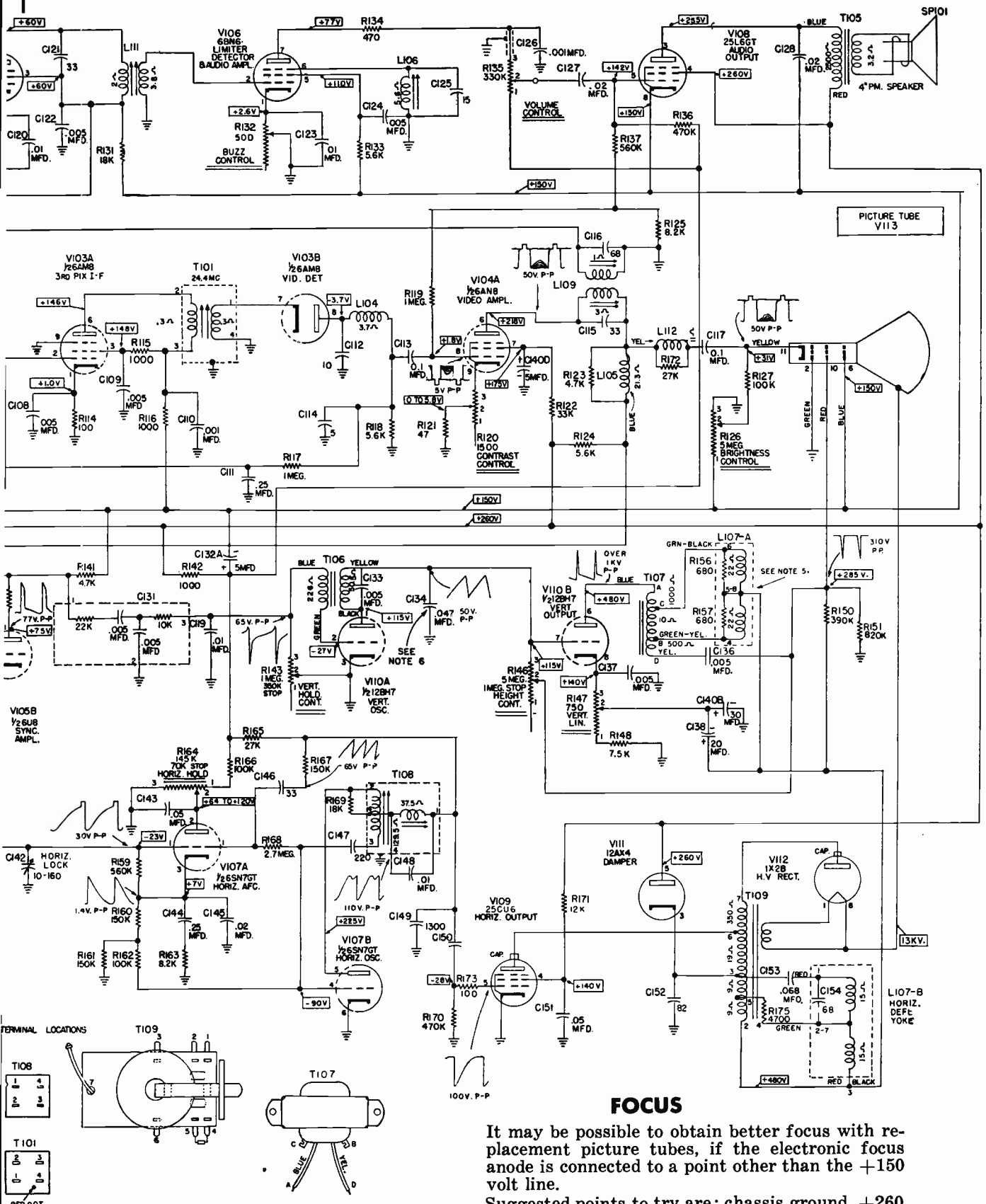

FOCUS

It may be possible to obtain better focus with replacement picture tubes, if the electronic focus anode is connected to a point other than the +150 volt line.

Suggested points to try are: chassis ground, +260 volts, +285 volts (picture tube pin 10) and +480 volt line.

Sentinel Radio Corp. **ALIGNMENT DATA** Models 1U-901, etc. (Continued)

CAUTION: One side of the chassis is connected to the power line. Therefore, test equipment should not be connected to the receiver unless an isolation transformer is used between the power line and the receiver. DO NOT GROUND THE RECEIVER CHASSIS UNLESS AN ISOLATION TRANSFORMER IS USED.

The front side of the chassis as referred to below means the side opposite the tubes.

SOUND ALIGNMENT

Step No.	Connect Signal Generator Through a .01 Capacitor	Signal Gen. Freq. MC.	Connect VTVM	Miscellaneous Connections and Instructions	Adjust
1	Cathode of Picture Tube	4.5 mc.	Across secondary of output trans. T105.	Use a high input level on signal generator.	Adjust L109 (rear slug) for minimum reading.
2	Pin 8 of V104.	4.5 mc. FM modulated 400 c.p.s., 25 kc. deviation	Across secondary of output trans. T105.	Set Buzz Control (R132) to approximately 90° from clockwise stop. Set the Volume Control (R135) at a low level.	L106 for maximum reading.
3	Pin 8 of V104.	4.5 mc. FM modulated 400 c.p.s., 25 kc. deviation	Across secondary of output trans. T105.	Set Buzz Control (R132) to approximately 90° from clockwise stop. Set the Volume Control (R135) at a low level.	L111 for maximum reading keeping input signal at a low level (below limiting).
4	Pin 8 of V104.	4.5 mc. FM modulated 400 c.p.s., 25 kc. deviation	Across secondary of output trans. T105.	Set Buzz Control (R132) to approximately 90° from clockwise stop. Set the Volume Control (R135) at a low level.	L109 (front slug) for maximum reading keeping input signal at a low level.
5	Pin 8 of V104.	4.5 mc. AM modulated 400 c.p.s.	Across secondary of output trans. T105.	Use a high input level on signal generator.	Buzz Control (R132) for null (minimum reading).
6	Pin 8 of V104.	4.5 mc. FM modulated 400 c.p.s., 25 kc. deviation	Across secondary of output trans. T105.	Set the Volume Control (R135) at a low level.	Re-peak L106 for maximum reading.

I.F. ALIGNMENT

Step No.	Connect Signal Generator Through a .01 Capacitor	Signal Gen. Freq. MC.	Connect VTVM	Miscellaneous Connections and Instructions	Adjust
1	Test Point No. 2 on Tuner (closest to L9 slug adjustment).	24.4 mc.	Junction of R118 and C113 and chassis.	Connect 3 volt bias battery negative lead to white lead from tuner, positive lead to chassis.	T101 for maximum indication on meter, limit input to make peak less than —2 volts D.C. on VTVM.
2	Test Point No. 2 on Tuner (closest to L9 slug adjustment).	22.9 mc.	Junction of R118 and C113 and chassis.	Connect 3 volt bias battery negative lead to white lead from tuner, positive lead to chassis.	L103 (rear slug) for maximum. Use first peak from tinnerman clip end of coil.
3	Test Point No. 2 on Tuner (closest to L9 slug adjustment).	21.9 mc.	Junction of R118 and C113 and chassis.	Connect 3 volt bias battery negative lead to white lead from tuner, positive lead to chassis.	L103 (front slug) for minimum. Input level should be high enough to produce at least .5 volts at null on VTVM. Use first null obtained from end of coil form opposite tinnerman clip.
4	Repeat steps 2 and 3.				
5	Test Point No. 2 on Tuner (closest to L9 slug adjustment).	25.5 mc.	Junction of R118 and C113 and chassis.	Connect 3 volt bias battery negative lead to white lead from tuner, positive lead to chassis.	L102 for maximum.
6	Test Point No. 2 on Tuner (closest to L9 slug adjustment).	25.1 mc.	Junction of R118 and C113 and chassis.	Connect 3 volt bias battery negative lead to white lead from tuner, positive lead to chassis.	L101 (front slug), for maximum. Use first peak from tinnerman clip end of coil.
7	Test Point No. 1 on Tuner (closest to C21 trimmer screw).	25.1 mc.	Junction of R118 and C113 and chassis.	Connect a 100 ohm resistor in series with a 1000 mmf. cap. across L101.	L9 (brass screw) on the Tuner for maximum.

Sparton CHASSIS TYPE 23U214

THE SPARKS-WITHINGTON COMPANY - JACKSON, MICHIGAN

SPARTON Models 11T210, 12A204, 12A210, and 14A204

(Circuit diagram on pages 148-149; see page 150 for data on Standard Tuner used in these sets.)

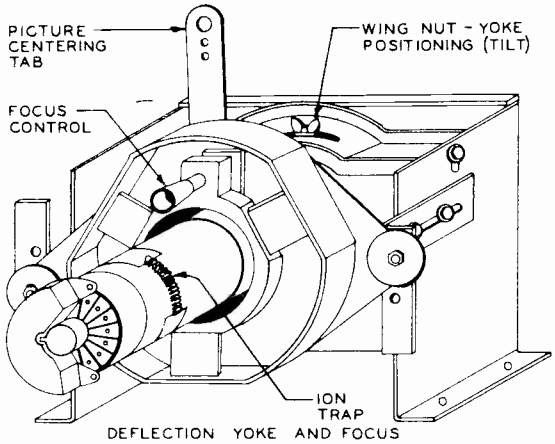

DEFLECTION YOKE AND FOCUS UNIT ASSEMBLY

Ion Trap and Focus

1. With brightness control set for low brilliance, move trap forward or backward and at the same time rotate until maximum brightness of raster is obtained.
2. Readjust raster brilliance to normal.
3. Adjust focus control until best picture detail is observed over entire face of picture tube.
4. Readjust ion trap once more for maximum brilliance.

THERE MAY BE TWO LOCATIONS WHERE ION TRAP WILL PRODUCE BRILLIANCE ON CRT; USE ONLY THE POSITION NEAR THE CRT BASE SOCKET; NEVER USE THE FORWARD POSITION

Deflection Yoke

1. The yoke must be held firmly against the flare of CRT.
2. To level picture, loosen and adjust wing nut on yoke.

Centering Raster

1. Center with magnet control tab on focus unit.
2. Readjust ion trap for maximum brilliance.

Picture Symmetry

Sometimes linearity and corresponding size controls may have to be re-adjusted. A test pattern is most practical for these adjustments which consist of HEIGHT, VERT LIN., WIDTH, and HOR LIN.

Peak Performance Control

1. With receiver operating, set the peak performance control to extreme counter-clockwise position (fringe area).
2. Tune in strongest signal in your area.
3. Set contrast to maximum (extreme clockwise position).
4. If picture appears normal leave control set in fringe position.
5. If picture shows any signs ov overload, rotate control clockwise towards local position until picture becomes normal.
6. Do not turn control toward local position any more than necessary.

Horizontal Oscillator (Make only when necessary)

1. Pull 6AL5 (phase detector).
2. Set hor. hold to center of range.
3. Shunt L47 with .1 MFD 400V condenser from test point on high voltage transformer to ground.
4. Adjust R133 until picture floats in horizontal sync.
5. Remove .1 condenser and adjust L47 until picture floats in horizontal sync.
6. Replace 6AL5.
7. Pull-in should occur when 2 or 3 diagonal bars are observed as hor. hold is rotated towards center of range.

FOCUS ADJUSTMENTS:

Under certain conditions the focus may be improved by adjusting focus unit mounting brackets to locate the focus unit approximately 4-1/4 to 4-3/8 inches from the base of the picture tube (measured from the end of center locating key of duodecal base). With the ion trap set as previously described, adjust the focus control for best overall picture detail.

CAUTION: READJUST ION TRAP AFTER ALL ADJUSTMENTS OF FOCUS.

MOST-OFTEN-NEEDED 1955 TELEVISION SERVICING INFORMATION

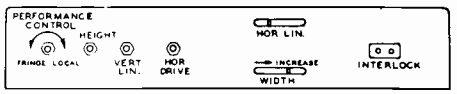

CHASSIS BACK VIEW

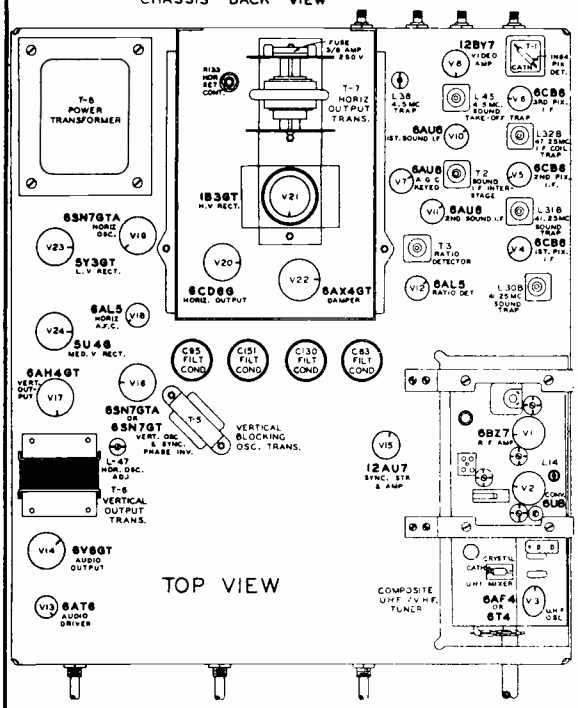

SPARTON TELEVISION SCHEMATIC DIAGRAM

CHASSIS TYPE 23U214 MODELS 11T210, 12A204, 12A210, 14A204

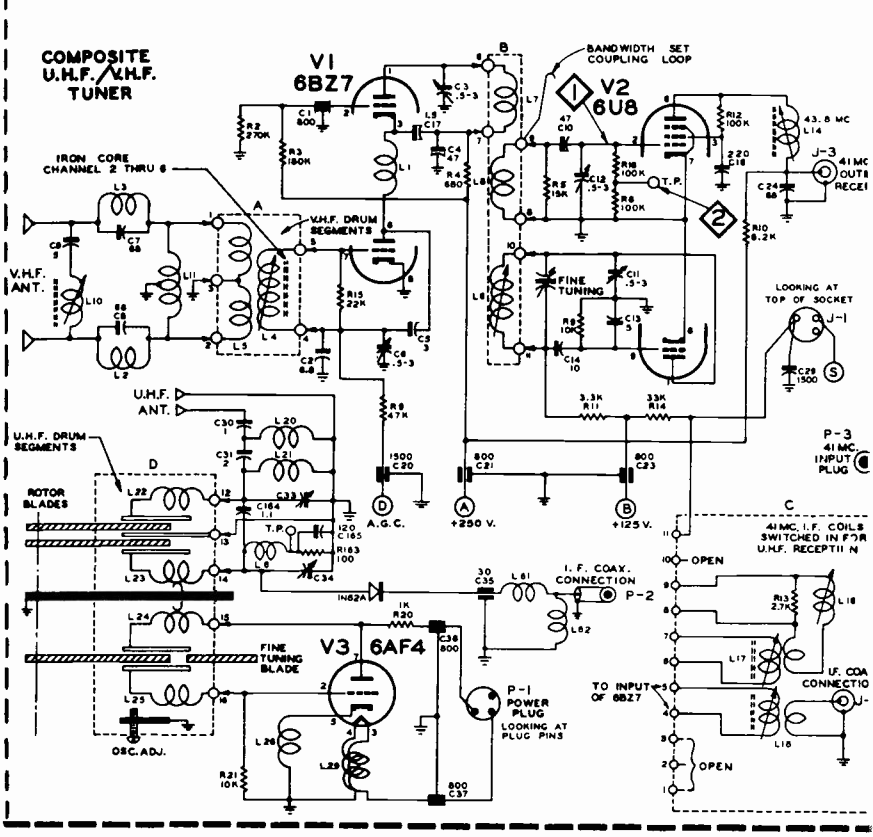

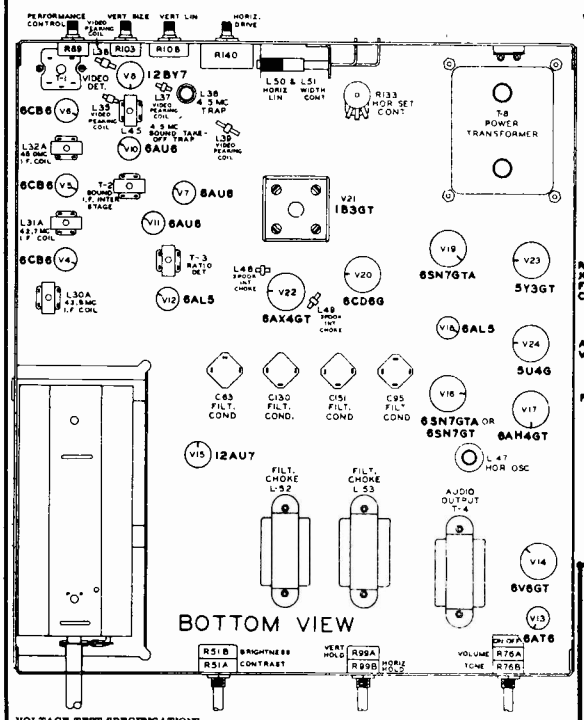

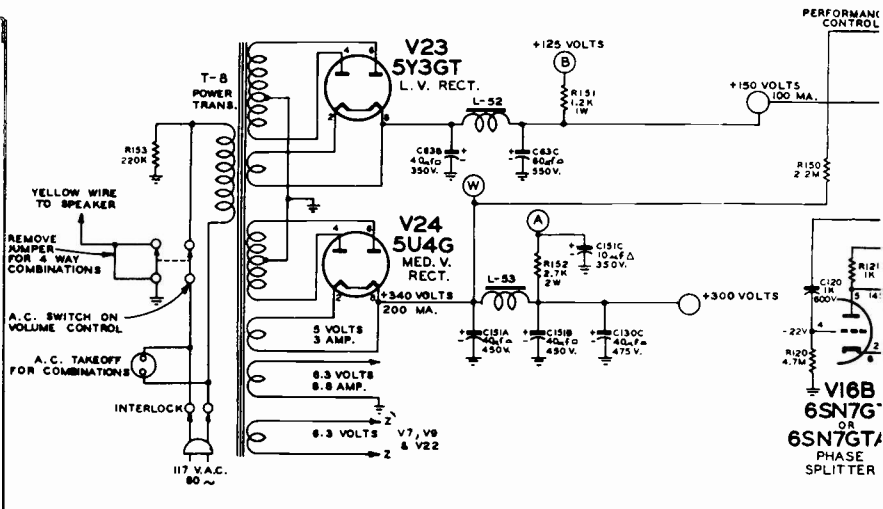

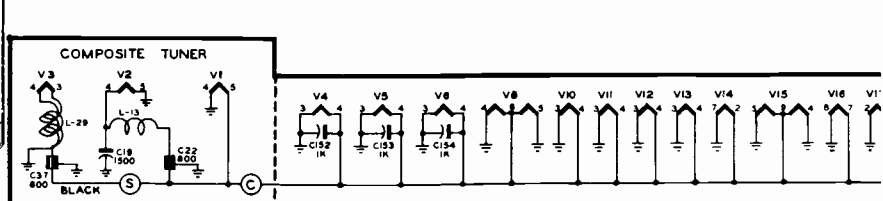

HEATER HOOKUP DIAGRAM

VOLTAGE TEST SPECIFICATIONS:

1. ALL VOLTAGES & CURRENT MEASURED IN VHF POSITION - CHANNEL 2.
2. LINE VOLTAGE - 117 VOLTS A.C. NO SIGNAL INPUT APPLIED TO SET.
3. BRIGHTNESS & CONTRAST CONTROL POSITION - MAXIMUM CLOCKWISE.
4. HORIZONTAL & VERTICAL HOLD CONTROL POSITIONS - SET CORRECT POSITION TO LOCK IN PICTURE.
5. WIDTH CONTROL POSITION - SET FOR NORMAL SIZE.
6. VERTICAL SIZE & LINEARITY CONTROL POSITION - SET FOR NORMAL SIZE BEST LINEARITY.
7. VOLUME CONTROL & TONE CONTROL POSITION - MAXIMUM COUNTER-CLOCKWISE.
8. INSTRUMENT (METER) USED - (VTVM) VACUUM TUBE VOLT METER.
9. UNLESS OTHERWISE DESIGNATED ALL VOLTAGES MEASURED IN RESPECT TO CHASSIS GROUND.

MOST-OFTEN-NEEDED 1955 TELEVISION SERVICING INFORMATION

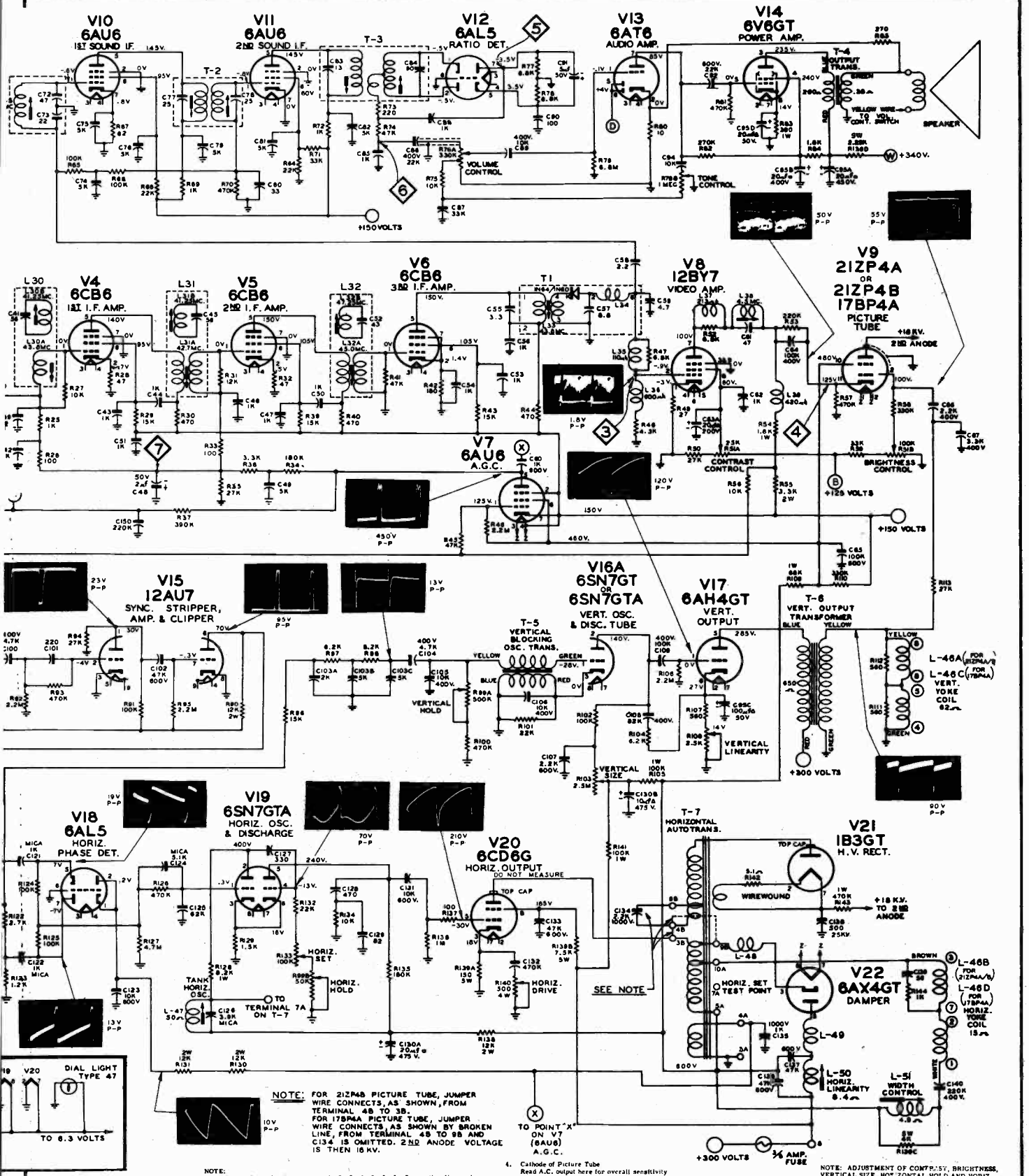

NOTE:
The points indicated by the numbers 1 2 3 4 5 6 & 7 are the alignment test points referred to in the alignment procedure.

1. Pin #2 of V2 (6U8) Osc. & Mixer Tube.
   Apply signals for spot and sweep alignment of converter stage.
2. For Tuner alignment only.
3. Diode load resistor.
   Read D.C. output here for spot I.F. alignment
   Connect scope here for visual I.F. alignment
4. Cathode of Picture Tube
   Read A.C. output here for overall sensitivity
   Connect VTVM for 4.5 Mc trap alignment
5. Ratio Detector Output
   Read D.C. here for alignment of sound take-off trap, inter-stage sound I.F. transformer and primary of ratio detector transformer
6. Ratio Detector Balanced Output
   Read D.C. here for alignment of secondary of ratio detector trans.
7. A.G.C. Line
   Apply 4.5 volts bias here for visual check of I.F. overall with oscilloscope

NOTE: ADJUSTMENT OF CONTRAST, BRIGHTNESS, VERTICAL SIZE, HORIZONTAL HOLD AND HORIZONTAL DRIVE CONTROLS WILL CHANGE VOLTAGES FROM THOSE INDICATED IN THEIR RESPECTIVE ASSOCIATED CIRCUITS.

WAVE FORMS TAKEN WITH CONTRAST CONTROL ADJUSTED FOR 50V. P to P at PIN 11 of V9.

Standard Tuner used in Sparton Chassis 23U214, continued.

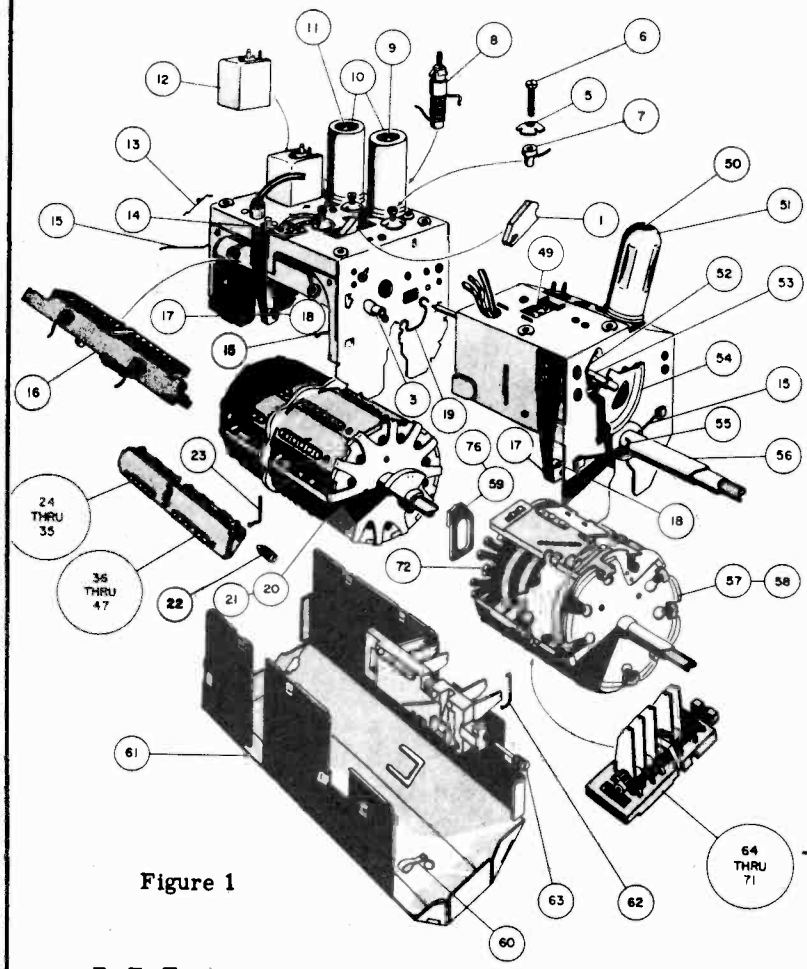

Figure 1

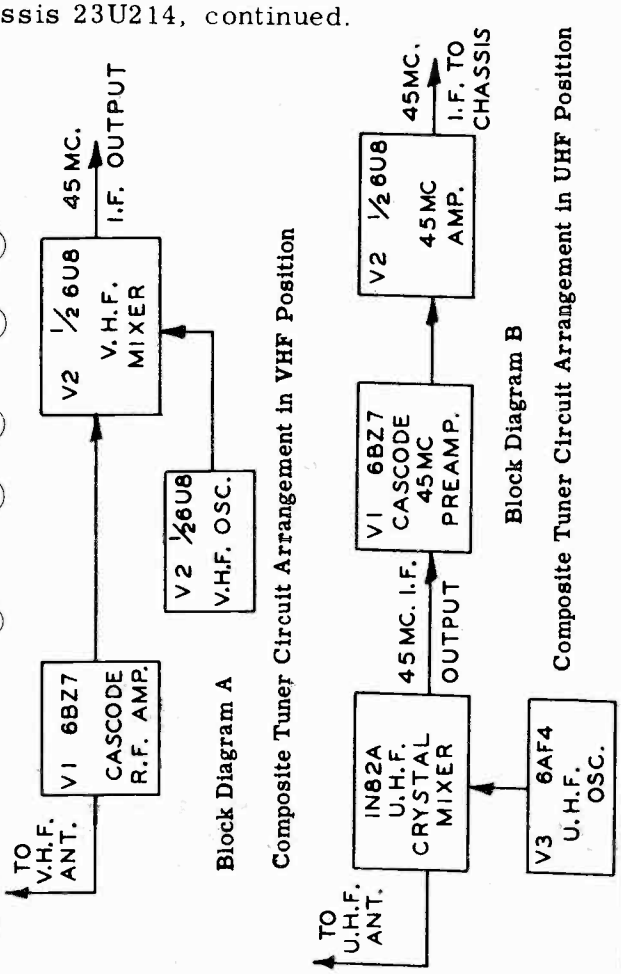

R. F. Tuner.

Figure 1 shows an exploded view of the composite Standard Coil tuner. It can readily be seen that separate UHF and VHF assemblies have been combined mechanically and electrically to form the complete unit. Three concentric shafts are used to drive all of the UHF/VHF switching and tuning elements. Of these, the inside shaft rotates a 12 position VHF turret assembly and, ganged to this same shaft, three cam shape dielectric sections that tune the UHF decade coils through the UHF digit positions. The center shaft rotates the UHF decade turret and with an attached double action cam tilts the 45 MC I.F. rocker bar into position for UHF operation. The third or outside shaft drives the ganged VHF and UHF fine tuning capacitors.

Block diagrams A and B show how the tuner circuits are arranged in the VHF and UHF positions.

The antenna circuit of the VHF portion contains resonant circuits L2-C8 and L3-C7 which are fixed tuned for maximum rejection of interference in the I.F. band. Circuit C9-L10 can be variably tuned to provide additional attenuation of any specific interfering signal in the 35 to 48 MC region. Remaining circuitry in the VHF section of the tuner is similar to that found in the straight VHF version, except that a pentode triode (6U8) is used as the VHF oscillator mixer. The coupling circuit between the mixer plate and 1st video I.F. stage is described in the video I.F. section.

A separate UHF antenna input is provided on the tuner. This is connected to capacitors C30 and C31, which together with coils L20 and L21 form a high pass filter with a cutoff frequency just below the UHF band. This system attenuates I.F., VHF and other interfering signals before they can enter the IN82 crystal mixer circuit.

The remainder of the antenna circuit consists of a portion of the UHF decade coil assembly (D on the schematic diagram) plus trimmers C33 and C34, choke L6 and capacitor C164. Tuning coils L22 and L23 are connected to capacitor blades which are imbedded in the coil board assembly proper (see item 64 to 71, figure 1). UHF channels within the range of a particular decade coil are tuned by movement of cam shaped dielectric sections which mechanically fit between these capacitor blades. To cover the entire UHF band eight separate decade coil board assemblies are switched in and out of the circuit by rotation of the UHF turret assembly (item 57, 58, shown in figure 1).

STEWART-WARNER MODELS 17T-9620A, 17T-9620B, 21C-9630C, 21C-9630CB, 21C-9630D, 21T-9630A, 21T-9630AB

Circuit diagram and other service information is printed on pages 152-153.

PRODUCTION CHANGES

The following tabulation furnishes complete details on changes which occurred during receiver production. The chassis circuitry can be established by referring to the serial number label affixed to the rear of the chassis and then checking the tabulation below. The starting serial number is shown for each group of changes. Unless otherwise indicated, chassis bearing serial numbers of a high order will contain changes listed under lower order numbers.

A letter following the component circuit diagram number thus—201A, indicates that this item was affected by a circuit change and is used only for circuit diagram reference.

SERIAL NUMBER	DESCRIPTION OF CHANGE
104,601	Initial Production
106,601	The following change was incorporated to reduce drive bar and affected components have circuit diagram reference A. 1. Resistor 169 was added between the center tap of the power transformer 63 and chassis ground. 2. Resistor 106 in grid circuit of tube V10, Horizontal Scanning Output, was changed from 470,000 Ohms to 330,000 Ohms.
106,701	The components affected by the following changes have circuit reference B. The following change was incorporated to provide a longer antenna lead-in. 1. R.F. Tuner part number was changed from 522514 to 522931. There are no electrical differences between these two units. The following change was incorporated to reduce radiation of harmonic frequencies being fedback through antenna lead-in. 1. Tube shields were added to the three I.F. Amplifier tubes V3, V4, and V5. 2. Antenna lead-in was dressed against side of chassis and antenna terminals were lowered to lower part of cabinet. 3. Resistor 168 (15,000 Ohms) was added across primary of 3rd I.F. transformer. 4. Peaking Coil 167 was added between detector 40 and condenser 44. The following change was incorporated to facilitate production. 1. Power Transformer 63 part number was changed from 522677 to 522973. When latter transformer is used, resistor 169 is no longer required, therefore, it was omitted. 2. Ion trap, 60 part number was changed from 521183 to 523001. The following change was incorporated to improve the taper of the Picture control. 1. Volume and Picture potentiometers, 46-A,B,C part number was changed from 522515 to 522744. When the latter control is used, resistor 47 is no longer required, therefore, it was omitted.

CONTROLS

DIAGRAM NO.	PART NO.	DESCRIPTION	LIST PRICE
46A B.C	522744	VOL & PIX POT. (INCL. ON-OFF SW.) A-PIX (1500 OHMS & WATT) B-ON-OFF SWITCH C-VOL. (1 MEG. & WATT) (USED IN CHASSIS BEARING SERIAL NUMBER ABOVE 106,701)	2.50
	522515	VOL & PIX POT. (INCL. ON-OFF SW.) A-PIX (3000 OHM & WATT) B-ON-OFF SWITCH C-VOL (1 MEG. & WATT) (USED IN CHASSIS BEARING SERIAL NUMBER BELOW 106,701)	2.50
59	520652	BRIGHTNESS POT. (100,000 OHM)	1.00
149	522349	VERT. HOLD POT. (1 MEG. & WATT)	.80

COILS AND TRANSFORMERS

DIAGRAM NO.	PART NO.	DESCRIPTION	LIST PRICE
24	520977	TRANS. 1ST VIDEO I.F. (LESS SLUG)	.75
	507357	SLUG CORE. 1ST VIDEO I.F. COIL	.20
32	522791	TRANS. 2ND VIDEO I.F. (LESS SLUG) (CODED RED DOT)	.80
	507357	SLUG CORE, 2ND I.F. COIL	.20
39	522703	TRANS. 3RD VIDEO I.F. (INCLUDES CRYSTAL 40, COND. 41, PEAKING COIL 42 & 167, RES. 43 & SLUG)	3.50
	507357	SLUG CORE, 3RD VIDEO I.F. COIL	.20
42	520985	COIL-PEAKING (DOUBLE PI CODED WITH GREEN DOT)	.65
48	509603	4.5 MC TRAP (INCLUDES SLUG & CONDENSER 49)	1.20
	507357	SLUG CORE, 4.5 MC TRAP COIL	.20
50	520689	COIL-PEAKING (SINGLE PI CODED WITH GOLD DOT)	.65
52	509342	COIL-PEAKING (SINGLE PI CODED WITH YELLOW DOT)	.60
63	522973	TRANS. POWER (USED IN CHASSIS BEARING SERIAL NUMBER ABOVE 106,701)	17.50
	522677	TRANS. POWER (USED IN CHASSIS BEARING SERIAL NUMBER BELOW 160,701)	17.50
65	522608	CHOKE--FILTER	3.50
100	522519	TRANS.---SYNCROGUIDE	3.50
109	522469	TRANS.---HORIZ. OUTPUT	9.50
118	509378	TRANS.---AUDIO TAKE-OFF	1.50
124	509706	TRANS. SOUND DISC. (INCL. COND. 124A & 124B)	3.00
142	509376	TRANS.---AUDIO OUTPUT	1.85
146	522674	TRANS.---VERT. OSC.	2.25
163	522344	TRANS.---VERT. OUTPUT	4.00
166-A.B	522924	YOKE, PIX TUBE DELFECTION (INCL. COND. 116 & RES. 164 & 165) (USED IN CHASSIS BEARING SERIAL NUMBER ABOVE 106,701)	10.00
	522699	YOKE, PIX TUBE DEFLECTION (INCL. COND. 116 & RES. 164 & 165) (USED IN CHASSIS BEARING SERIAL NUMBER BELOW 106,701)	10.00
167	509340	COIL-PEAKING (SINGLE PI, CODED WITH WHITE DOT) (USED IN CHASSIS BEARING SERIAL NUMBER ABOVE 106,701)	.55
401	520702	COIL-ANTENNA CH. 2 CODED 2Q	1.40
	520703	COIL-ANTENNA CH. 3 CODED 3Q	1.40
	520704	COIL-ANTENNA CH. 4 CODED 4Q	1.40
	520705	COIL-ANTENNA CH. 5 CODED 5Q	1.40
	520706	COIL-ANTENNA CH. 6 CODED 6Q	1.40
	520707	COIL-ANTENNA CH. 7 CODED 7Q	1.15
	520708	COIL-ANTENNA CH. 8 CODED 8Q	1.15
	520709	COIL-ANTENNA CH. 9 CODED 9Q	1.15
	520710	COIL-ANTENNA CH. 10 CODED 10Q	1.15
	520711	COIL-ANTENNA CH. 11 CODED 11Q	1.15
	520712	COIL-ANTENNA CH. 12 CODED 12Q	1.15
	520713	COIL-ANTENNA CH. 13 CODED 13Q	1.15
406	520701	COIL-CATHODE COUPLING	.15
413	520722	COIL-R.F. & OSC. CH.2 CODED 2Q	1.85
	520723	COIL-R.F. & OSC. CH.3 CODED 3Q	1.85
	520724	COIL-R.F. & OSC. CH.4 CODED 4Q	1.85
	520725	COIL-R.F. & OSC. CH.5 CODED 5Q	1.85
	520726	COIL-R.F. & OSC. CH.6 CODED 6Q	1.85
	520727	COIL-R.F. & OSC. CH.7 CODED 7Q	1.70
	520728	COIL-R.F. & OSC. CH.8 CODED 8Q	1.70
	520729	COIL-R.F. & OSC. CH.9 CODED 9Q	1.70
	520730	COIL-R.F. & OSC. CH.10 CODED 10Q	1.70
	520731	COIL-R.F. & OSC. CH.11 CODED 11Q	1.70
	520732	COIL-R.F. & OSC. CH.12 CODED 12Q	1.70
	520733	COIL-R.F. & OSC. CH.13 CODED 13Q	1.70
	507986	SLUG FOR OSC. COIL: AUX. FINE TUNING ADJUSTMENT	.05
424	520714	COIL-CHOKE	.15
426	520715	COIL-CHOKE	.45
427	520734	COIL---CONVERTER PLATE I.F. (INCLUDES SLUG & CLIP)	.75
	509062	SLUG CORE-CONVERTER PLATE COIL	.12
434	520518	COIL-CHOKE	.10
436	520520	COIL-CHOKE	.10

STEWART-WARNER MODELS 17T-9620A, 17T-9620B, 21C-9630C, 21C-9630CB, 21C-9630D, 21T-9630A, 21T-9630AB

OSCILLOGRAMS

All oscillograms taken with ground lead of 'Scope connected to receive chassis and controls set for normal reception. Picture control adjusted to give 42 volts peak to peak at cathode of picture tube. Oscilloscope vertical amplified response was flat to within 20% at 2 MC.

Number appearing to the left of oscillogram specifies setting of horizontal sweep frequency control on 'Scope.

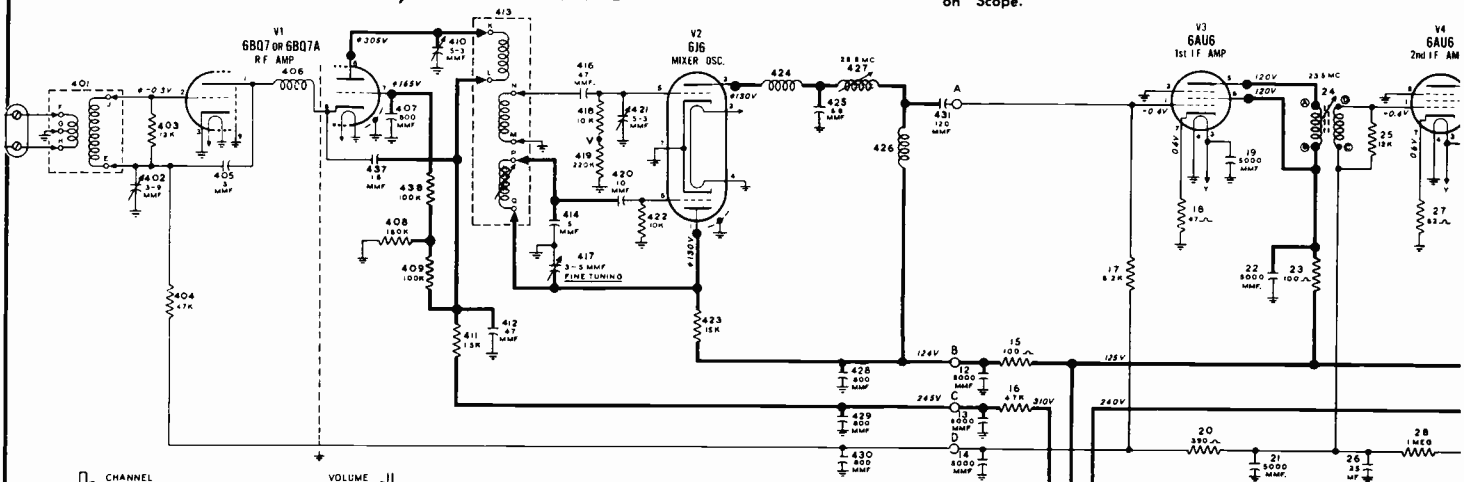

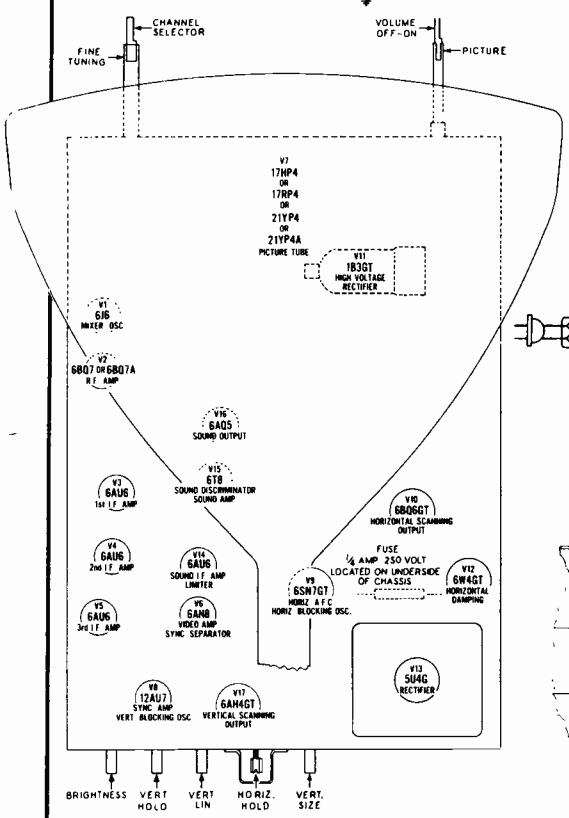

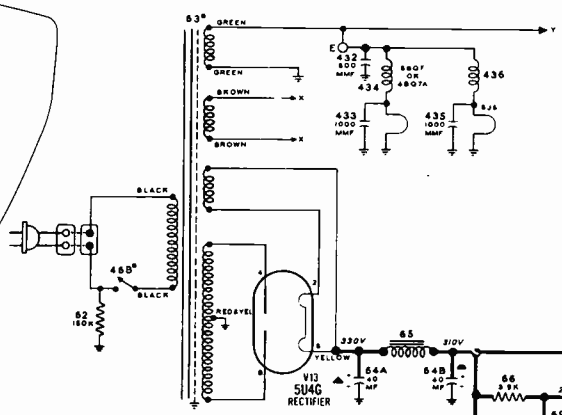

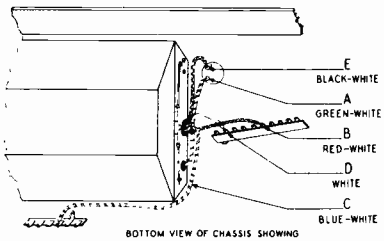

BOTTOM VIEW OF CHASSIS SHOWING CONNECTION TO R F TUNER UNIT

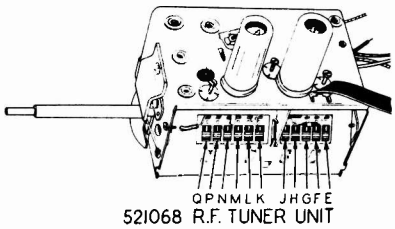

521068 R.F. TUNER UNIT
(SHOWN WITH SIDE SHIELD REMOVED)

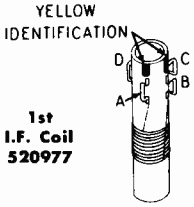

1st I.F. Coil 520977

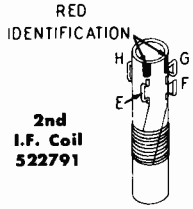

2nd I.F. Coil 522791

MOST-OFTEN-NEEDED 1955 TELEVISION SERVICING INFORMATION

STEWART - WARNER

Models 17T-9620A, -B, 21C-9630C, 21C-9630CB, -D, -A, -AB.

VOLTAGE MEASUREMENTS

All voltages measured with a 20,000 Ohm per volt meter with the receiver connected to a 117 volt 60 cycle power supply.

Tuner set to an inactive channel with antenna terminals shorted and connected to ground.

Controls set for normal reception—Picture control completely counterclockwise. Voltages marked with an asterisk (*) will vary widely with control settings.

All voltages shown, except R.F. Tuner socket measurements, were taken under the above conditions.

‡ R. F. tuner socket voltage measurements were taken with tubes removed from sockets.

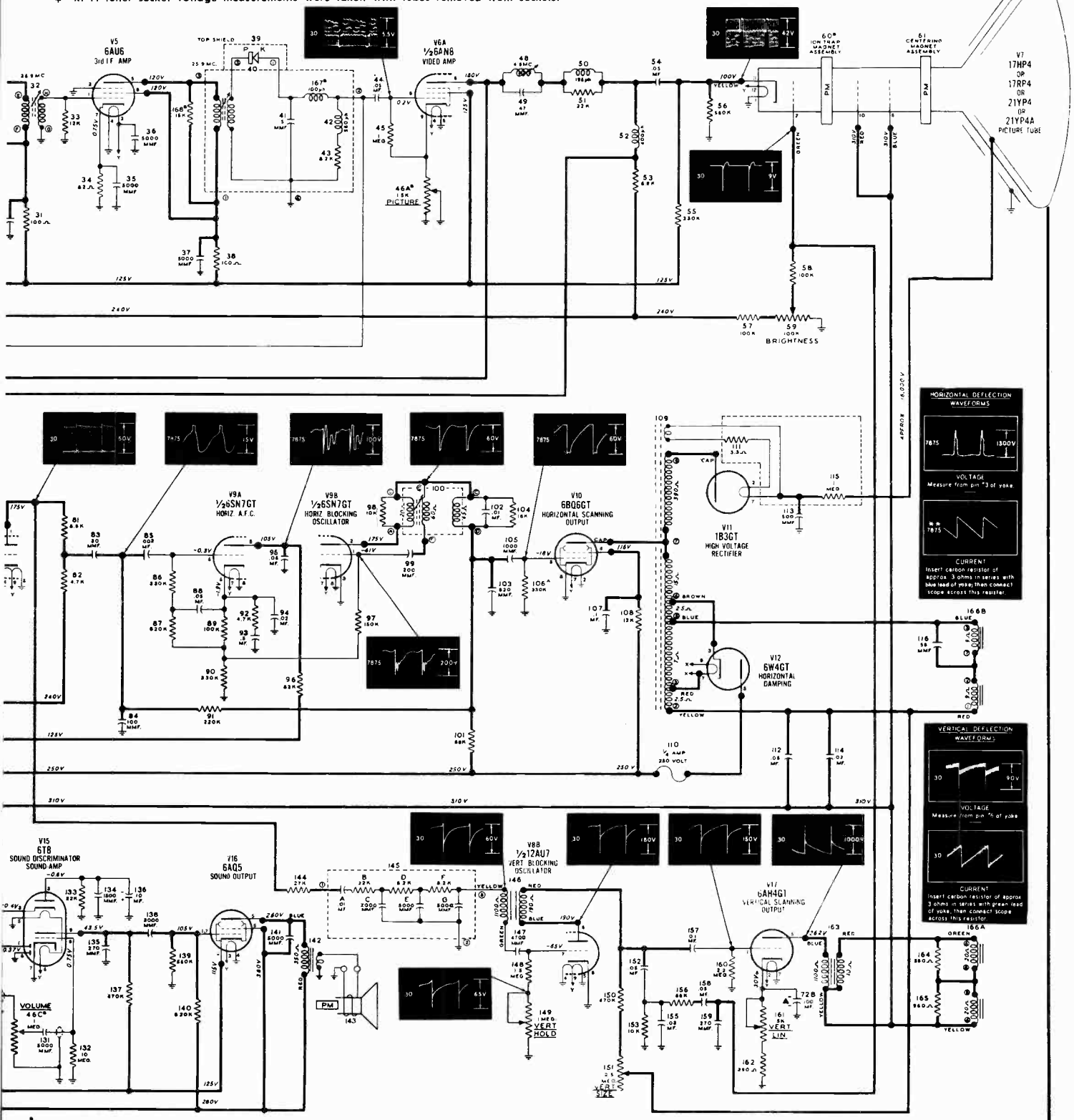

STEWART-WARNER MODELS
21C-9700W, 21C-9700WB, 21C-9700X
21C-9700XB, 21T-9700R, 21T-9700RB

1st and 2nd I.F. Coil 520977

3rd I.F. Coil 520979

Points A, B, C, D connect to corresponding points of tuner diagram printed on page 156.

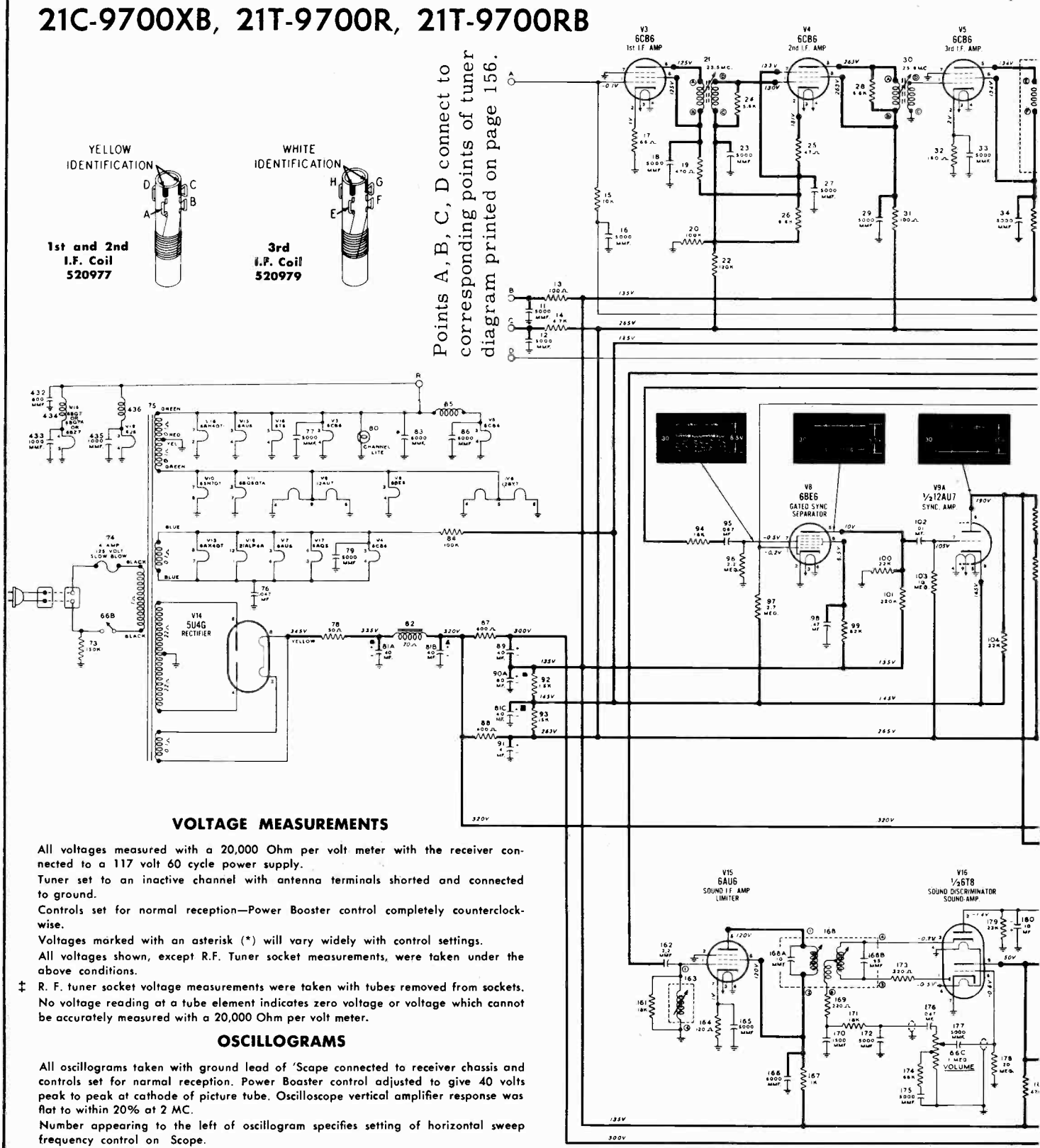

VOLTAGE MEASUREMENTS

All voltages measured with a 20,000 Ohm per volt meter with the receiver connected to a 117 volt 60 cycle power supply.

Tuner set to an inactive channel with antenna terminals shorted and connected to ground.

Controls set for normal reception—Power Booster control completely counterclockwise.

Voltages marked with an asterisk (*) will vary widely with control settings.

All voltages shown, except R.F. Tuner socket measurements, were taken under the above conditions.

‡ R. F. tuner socket voltage measurements were taken with tubes removed from sockets. No voltage reading at a tube element indicates zero voltage or voltage which cannot be accurately measured with a 20,000 Ohm per volt meter.

OSCILLOGRAMS

All oscillograms taken with ground lead of 'Scope connected to receiver chassis and controls set for normal reception. Power Booster control adjusted to give 40 volts peak to peak at cathode of picture tube. Oscilloscope vertical amplifier response was flat to within 20% at 2 MC.

Number appearing to the left of oscillogram specifies setting of horizontal sweep frequency control on Scope.

MOST-OFTEN-NEEDED 1955 TELEVISION SERVICING INFORMATION

STEWART - WARNER Models 21T-9700R, 21T-9700RB, 21T-9700W, 21T-9700WB, 21T-9700X, 21T-9700XB.

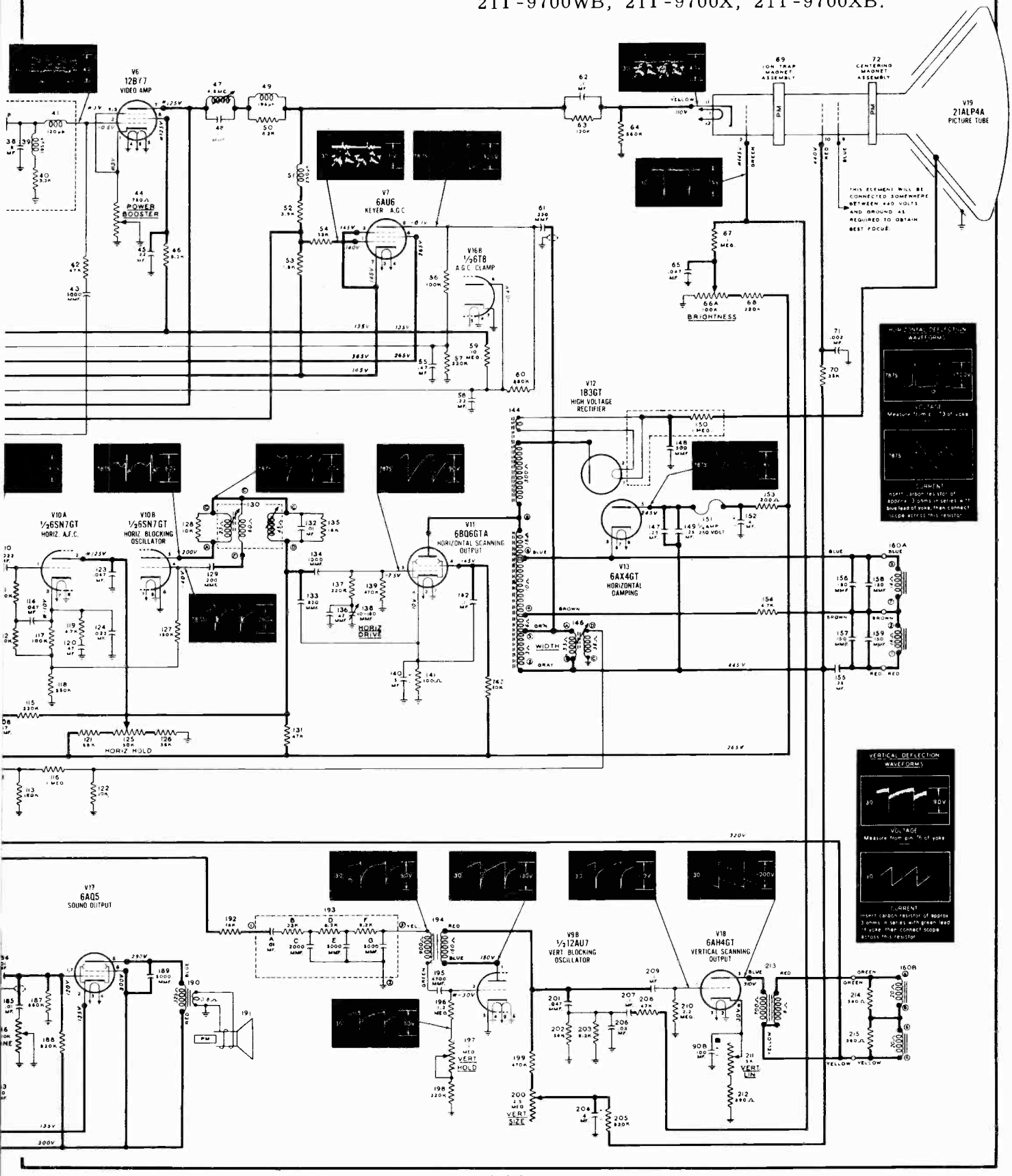

STEWART - WARNER Models 21T-9700R, -RB, -W, -WB, -X, -XB, Continued

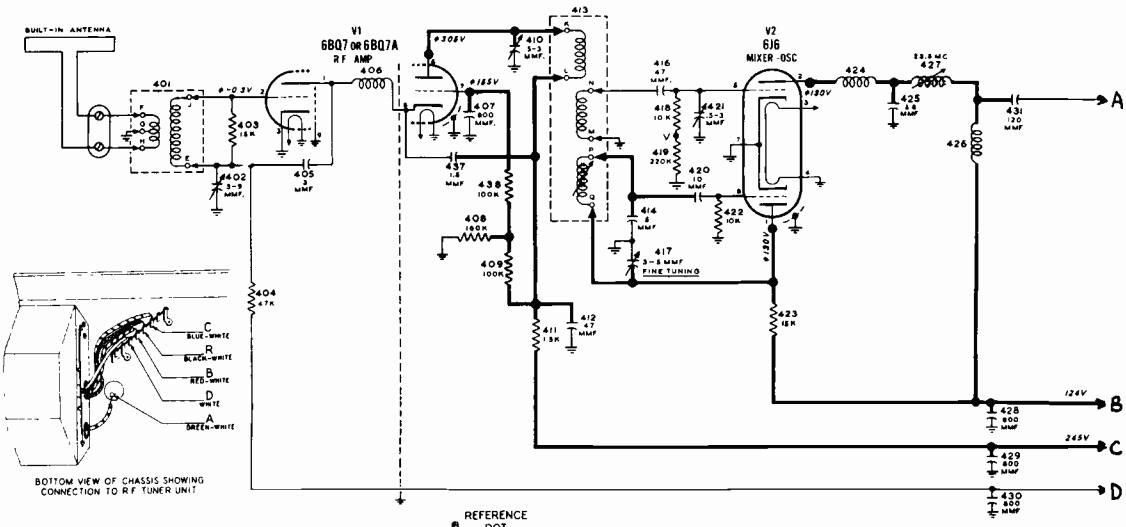

Wires marked A, B, C, D, connect to corresponding points of main circuit printed on pages 154-155.

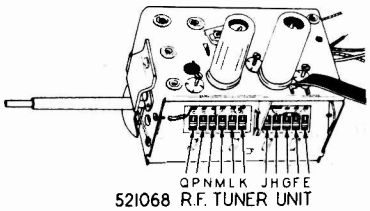

521068 R.F. TUNER UNIT
(SHOWN WITH SIDE SHIELD REMOVED)

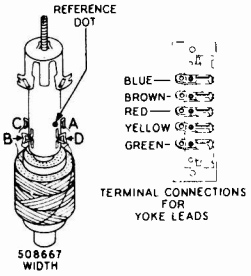

TUBE AND CONTROL LOCATIONS

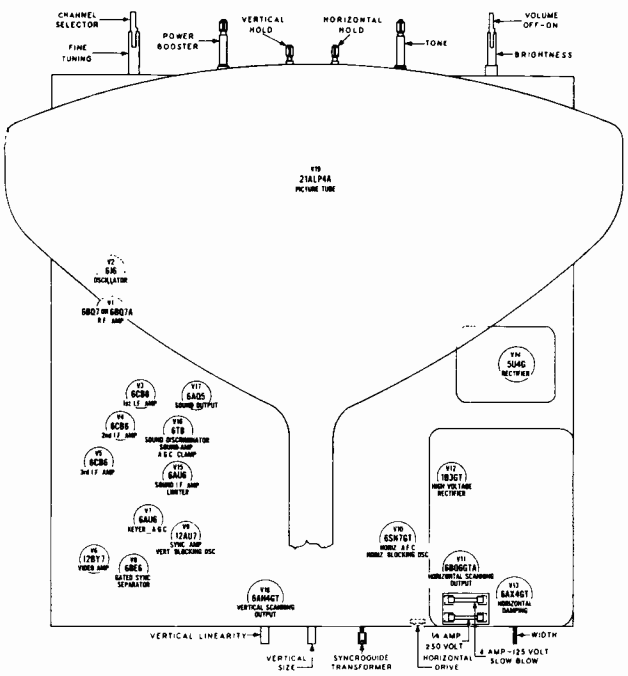

424	520714	COIL-CHOKE	.15
426	520715	COIL-CHOKE	.45
427	520734	COIL---CONVERTER PLATE I.F. (INCLUDES SLUG & CLIP)	.75
	509062	SLUG CORE-CONVERTER PLATE COIL	.12
434	520518	COIL-CHOKE	.10
436	520520	COIL-CHOKE	.10

DIA-GRAM NO.	PART NO.	DESCRIPTION	LIST PRICE
		COILS AND TRANSFORMERS	
21	520977	TRANS. 1ST VIDEO I.F. (LESS SLUG)	.75
	507357	SLUG CORE: 1ST VIDEO I.F. COIL	.20
30	520977	TRANS. 2ND VIDEO I.F. (LESS SLUG)	.75
	507357	SLUG CORE: 2ND VIDEO I.F. COIL	.20
35	520979	TRANS. 3RD VIDEO I.F. (LESS SLUG)	.75
	507357	SLUG CORE: 3RD VIDEO I.F. COIL	.20
39	520689	COIL-PEAKING (SINGLE PI. CODED PURPLE OR GOLD DOT)	.65
41	520984	COIL-PEAKING (SINGLE PI. CODED RED DOT)	.50
47	509603	COIL-4.5 MC. TRAP (INCLUDES SLUG AND CONDENSER #48)	1.20
	507357	SLUG CORE: 4.5 MC. TRAP COIL	.20
49	520689	COIL-PEAKING (SINGLE PI. CODED PURPLE OR GOLD)	.65
51	509341	COIL-PEAKING (SINGLE PI. CODED GREEN DOT)	.60
69	523085	ION TRAP	1.10
72	521267	CENTERING MAGNET ASSEMBLY (INC. WITH BACK COVER OF YOKE)	1.10
75	520951	TRANSFORMER--POWER	17.50
82	508341	CHOKE--FILTER	3.60
85	507584	COIL--CHOKE	.28
130	522519	TRANSFORMER--SYNCROGUIDE	3.50
	521064	SLUG: SYNCROGUIDE TRANSFORMER	.70
144	523087	TRANSFORMER, HORIZONTAL OUTPUT	6.50
146	508667	COIL--WIDTH (INCL. SLUG & CLIP)	1.75
	508784	SLUG: WIDTH COIL (INC. MTG. CLIP)	.65
160-A B	522987	YOKE, PIX TUBE DEFLECTION (INCL. RESISTORS AND CENTERING MAGNET)	12.50
163	509378	TRANSFORMER--AUDIO TAKE-OFF	1.50
168	509706	TRANSFORMER--SOUND DISCRIMINATOR (INCL. CONDENSERS 168A & 168B)	3.00
190	509376	TRANSFORMER--AUDIO OUTPUT	1.85
194	520980	TRANSFORMER--VERT. BLOCKING OSC.	1.90
213	520975	TRANSFORMER--VERT. OUTPUT (INCL. CONNEC. FOR DEFLEC. YOKE LEADS)	4.00
401	520702	COIL-ANTENNA CH. 2 CODED 2Q	1.40
	520703	COIL-ANTENNA CH. 3 CODED 3Q	1.40
	520704	COIL-ANTENNA CH. 4 CODED 4Q	1.40
	520705	COIL-ANTENNA CH. 5 CODED 5Q	1.40
	520706	COIL-ANTENNA CH. 6 CODED 6Q	1.40
	520707	COIL-ANTENNA CH. 7 CODED 7Q	1.15
	520708	COIL-ANTENNA CH. 8 CODED 8Q	1.15
	520709	COIL-ANTENNA CH. 9 CODED 9Q	1.15
	520710	COIL-ANTENNA CH. 10 CODED 10Q	1.15
	520711	COIL-ANTENNA CH. 11 CODED 11Q	1.15
	520712	COIL-ANTENNA CH. 12 CODED 12Q	1.15
	520713	COIL-ANTENNA CH. 13 CODED 13Q	1.15
406	520701	COIL-CATHODE COUPLING	.15
413	520722	COIL-R.F. & OSC. CH.2 CODED 2Q	1.85
	520723	COIL-R.F. & OSC. CH.3 CODED 3Q	1.85
	520724	COIL-R.F. & OSC. CH.4 CODED 4Q	1.85
	520725	COIL-R.F. & OSC. CH.5 CODED 5Q	1.85
	520726	COIL-R.F. & OSC. CH.6 CODED 6Q	1.85
	520727	COIL-R.F. & OSC. CH.7 CODED 7Q	1.70
	520728	COIL-R.F. & OSC. CH.8 CODED 8Q	1.70
	520729	COIL-R.F. & OSC. CH.9 CODED 9Q	1.70
	520730	COIL-R.F. & OSC. CH.10 CODED 10Q	1.70
	520731	COIL-R.F. & OSC. CH.11 CODED 11Q	1.70
	520732	COIL-R.F. & OSC. CH.12 CODED 12Q	1.70
	520733	COIL-R.F. & OSC. CH.13 CODED 13Q	1.70
	507986	SLUG FOR OSC. COIL: AUX. FINE TUNING ADJUSTMENT	.05

STROMBERG-CARLSON

21T-22T SERIES TELEVISION RECEIVER

UHF Conversion Model 21T.

In these models the receiver is equipped with a tuning unit that is capable of receiving UHF stations by making a slight modification on the tuner.

(Caution: U type UHF and VHF strips must be used in the 21T chassis).

To accomplish Customized Tuning on either UHF or VHF, it may be necessary to center the range of the fine tuning control. Set the selector knob to the desired channel and adjust the fine tuning control for the mid-point of its rotation. Remove the control knobs and insert a thin non-metallic screwdriver through the cabinet adjustment hole, and adjust oscillator slug for best picture and sound. Note that each channel is to be adjusted individually, both on UHF and VHF.

AGC Adjustment.

The AGC control is located on back of the chassis (See tube location chart). The purpose of this control is to eliminate an interference beat which may be produced in strong channel 6 areas. The normal position of this control is fully counterclockwise when beat interference is not present.

If this beat occurs, the control should be turned clockwise from a completely counter-clockwise position until the beat disappears.

T-11 has been changed in production (effective as follows):

1. Remove white lead from bottom terminal of trap coil to cathode of tube.
2. Disconnect ground end of cathode resistor (330 ohm) and by-pass (330 MMF) and connect to cathode of tube.
3. Connect jumper, between the ground point of which the cathode resistor-condenser combination was connected, and the bottom terminal on the same side of the coil.

Keep in mind on the 21-22 series TV receivers that the current to the IF strip is drawn through V-19 (6W6 audio output tube). Failure of this tube, of course, would remove B plus from the IF strip, causing no picture and no audio.

The following changes have been made in production.

1. Delete C-131 .0047 MF capacitor.
2. Delete C-133 100 MMF capacitor.
3. Delete C-191 .1 MF capacitor.
4. Delete R-191 560K resistor.
5. Delete R-185 120K ohm resistor.
6. Change R-184 from 270K ohm to 560K ohm resistor. (S-C Part #28188).
7. Add 1 680K ½ watt resistor R-108 (S-C Part #28189) from pin 5 of V-19 (6W6 audio output) to junction of R-193 and C-193.
8. Add 470K ohms ½ watt resistor R-197 (S-C Part #28187) from R-190 270K ohm resistor to ground.
9. Add 2 6.8K 2 watt resistors R-185 (S-C Part #149053) in series from B plus 150 volts to ground.
10. Remove R-243 3.9K ohm resistor from junction of R-204 and R-215 and connect to B plus 150 volts.
11. Remove B plus 150 volts from 1st IF V-9 (6CB6) at junction of R-94, R-93, C-94 and connect to B plus 110 volts.

A change in the circuit of the 21-22 series TV receivers to prevent pulling at the top of the picture, has been put in production. A 2.2 meg. ½w. resistor R-249 (S-C Part #149121) has been added from B plus 310 volts to pin 1 of V-20 (6AU6) keyed AGC tube. A 47K ½w resistor R-216 (S-C Part #149111) is added across L-28 horizontal frequency coil. (Code date 54-211).

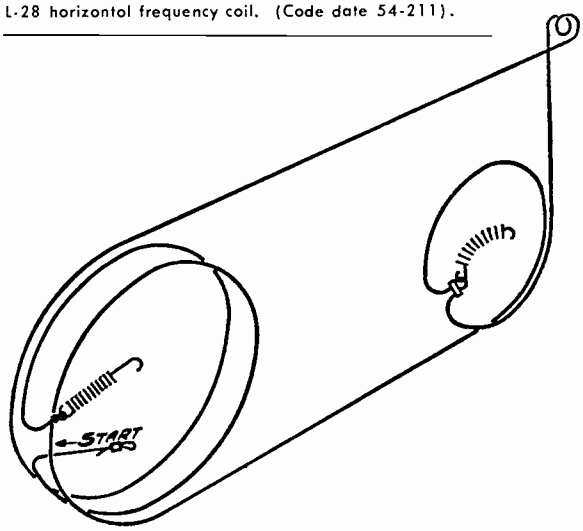

ALTERNATE TRAP ALIGNMENT

IF THIS METHOD IS USED, IT SHOULD BE PERFORMED BEFORE THE IF CURVE ALIGNMENT

SIGNAL GENERATOR CONNECTION	OSCILLOSCOPE OR VTVM CONNECTION	ADJUSTMENTS
1. Connect a modulated (400 cycle) 39.75 MC signal to the grid of 1st IF tube, pin 1 of V-9, 6CB6.	Same as Step # 1. (above).	1. Adjust top slug of T-6 for minimum response on scope.
2. Connect a modulated (400 cycle) 47.25 MC signal to the grid of 1st IF tube, pin 1 of V-9, 6CB6.	Same as Step # 1.	2. Adjust top slug of T-8 for minimum response on scope.
3. Connect a modulated (400 cycle) 41.25 MC signal to the grid, pin 1 of V-9, 6CB6.	Same as Step # 1.	3. Adjust top slug of T-7 and T-11 for minimum response on scope.

Complete alignment on the page after next. Circuit diagram on the next page, over.

Stromberg-Carlson 21T - 22T Series Television Receivers Circuit Diagram

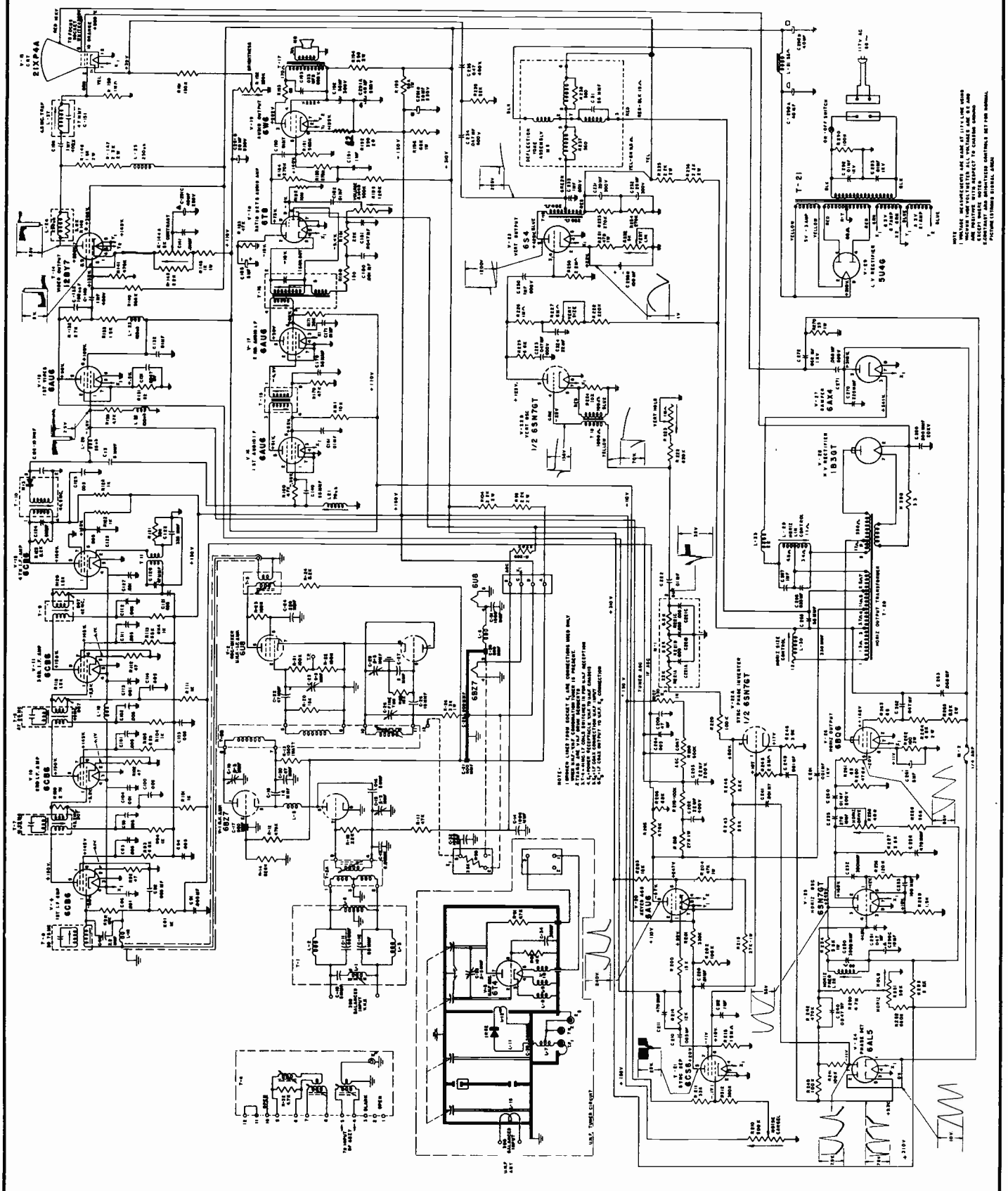

Stromberg-Carlson 21T - 22T Series Television Receivers (Continued)

ALIGNMENT PROCEDURE

Apply AGC bias of approximately 3 volts to AGC line (across C-160).

Maintain the output level of the sweep generator to obtain a second detector output of 2 volts peak-to-peak. Oscilloscope should be calibrated to read 1-VOLT per inch vertical deflection.

SIGNAL GENERATOR CONNECTION	OSCILLOSCOPE OR VTVM CONNECTION	ADJUSTMENTS	
1. Output of 40MC. sweep generator to grid of 1st IF tube, pin 1 of V9, 6CB6 thru 100 MMF isolating capacitor.	Input of scope to grid of Video Amp., pin 1 of V-13, 6AU6 thru 47K-Ohm isolating resistor.	1. Adjust the bottom slug of T-7 1st IF transformer for low intermediate frequency (43.2 MC approx.). 2. Adjust the bottom slug of T-9 3rd IF transformer for low frequency. (42.0 MC approx.). 3. Adjust the bottom slug of T-8 2nd IF transformer for high frequency. (45.0 MC approx.). 4. Adjust the bottom slug of T-10 4th IF transformer for high intermediate frequency. (44.5 MC approx.). 5. Maintaining the above relative frequency positions of the individual stages, adjust the slugs to produce a curve as shown with the 41.9 and 45.75 MC markers at 50% response Fig. # 1.	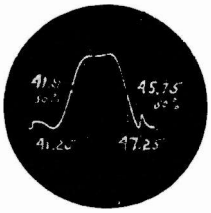 FIG. 1
2. Output of 40MC sweep generator to junction of T-6 and L-18. Using 39.75MC marker.	Same as Step # 1.	1. Adjust the top slug of T-6 for response 39.75MC as shown on curve Fig. 2.	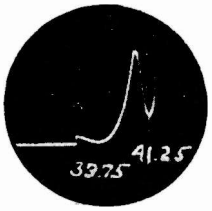 FIG. 2
3. Same as Step # 2. Using 41.25MC marker.	Same as Step # 1.	1. Adjust the top slug of T-7 and T-11 for response as shown an curve Fig. 2.	
4. Same as Step # 1 using 47.25 MC marker.	Same as Step # 1.	1. Adjust the top slug of T-8 for response curve as shown on Fig. 3. 2. Repeat Step # 1 (IF response) to reproduce the curve as shown in Fig. 1.	 FIG. 3
5. Raise converter tube shield from ground and connect output of 40 MC sweep generator to the shield.	Same as Step # 1.	1. Adjust the bottom slug of T-6 and T-5 tuner assembly to produce a curve as shown in Fig. 4.	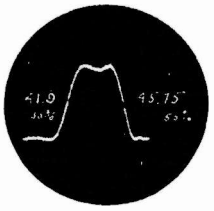 FIG. 4
6. Connect a 400 cycle modulated 4.5 MC signal to the junction of Video Detector M-13 and C-126. Adjust generator output to a level to indicate 1.5 volts VTVM.	Connect 2-100K resistors in series from the plate of ratio detector, pin 2 of V-18, 6T8 to ground, connect VTVM from junction of the resistors to ground.	1. Adjust L-21, T-15, and the bottom slug of T-16 for maximum indication.	
7. Same as Step # 6.	Connect VTVM ground lead to the junction of the 2-100K resistors (see step # 6 above). Connect VTVM D.C. lead to the junction of C-181 and R-181.	1. Adjust the secondary (top slug) of T-16 for zero volts between the positive and negative excursions. (Increase generator output for good deflection).	

NOTE: To Perform IF Alignment it is not necessary to Remove Picture Tube. Use a non metallic aligning tool such as Walsco No. 2526 or equivalent which permits all slugs to be adjusted from the underside of the chassis.

Tube and trimmer location diagram on the next page.

Stromberg-Carlson Tube and Trimmer Location Diagram

21T-22T Series Television Receiver

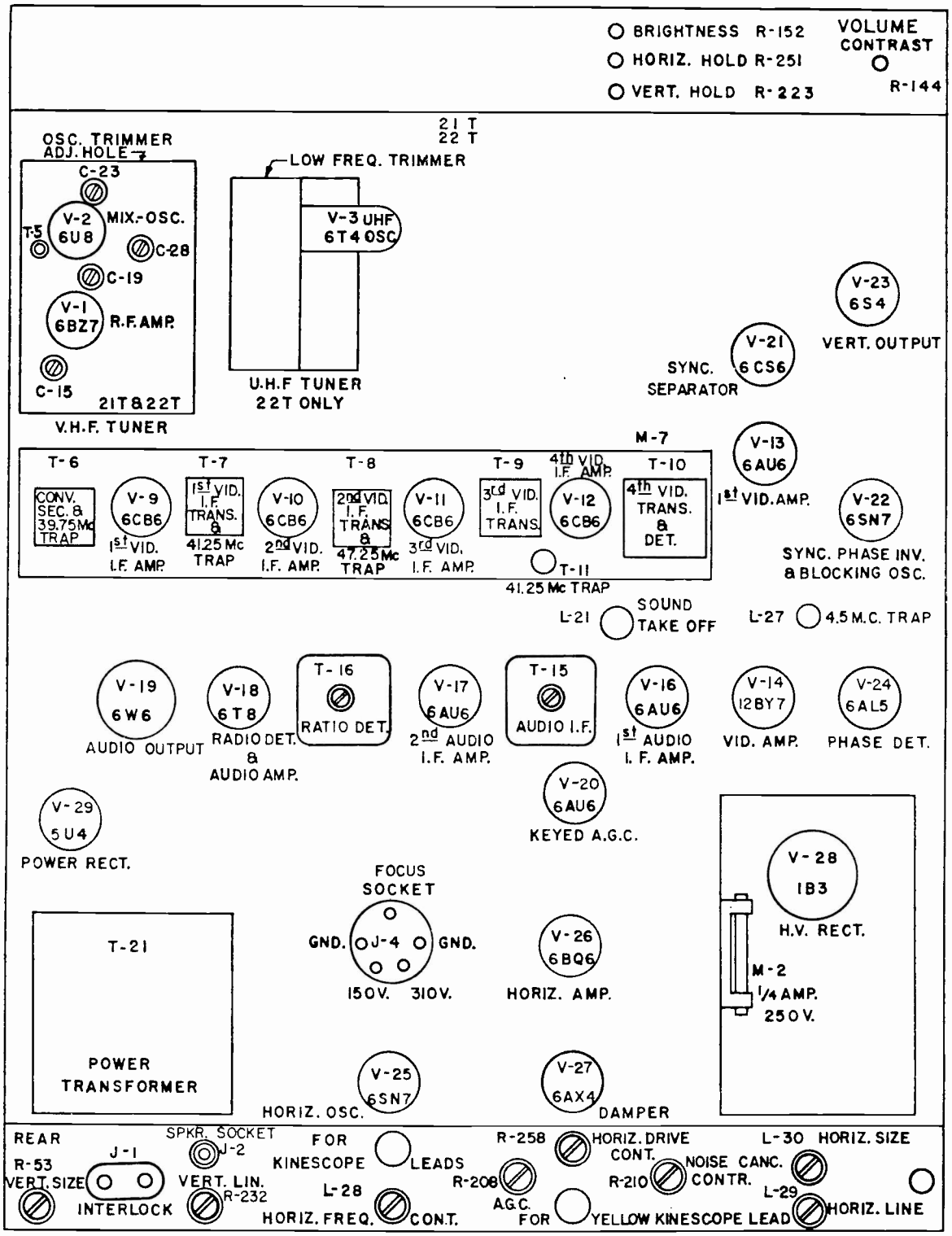

NOTE: 1N105 Diode Detector is Located Under Removable Shield Cover of T-10 4th Video IF Trans.

SYLVANIA ELECTRIC PRODUCTS INC.

CHASSIS 1-522-1, -2

MODELS 596 SERIES

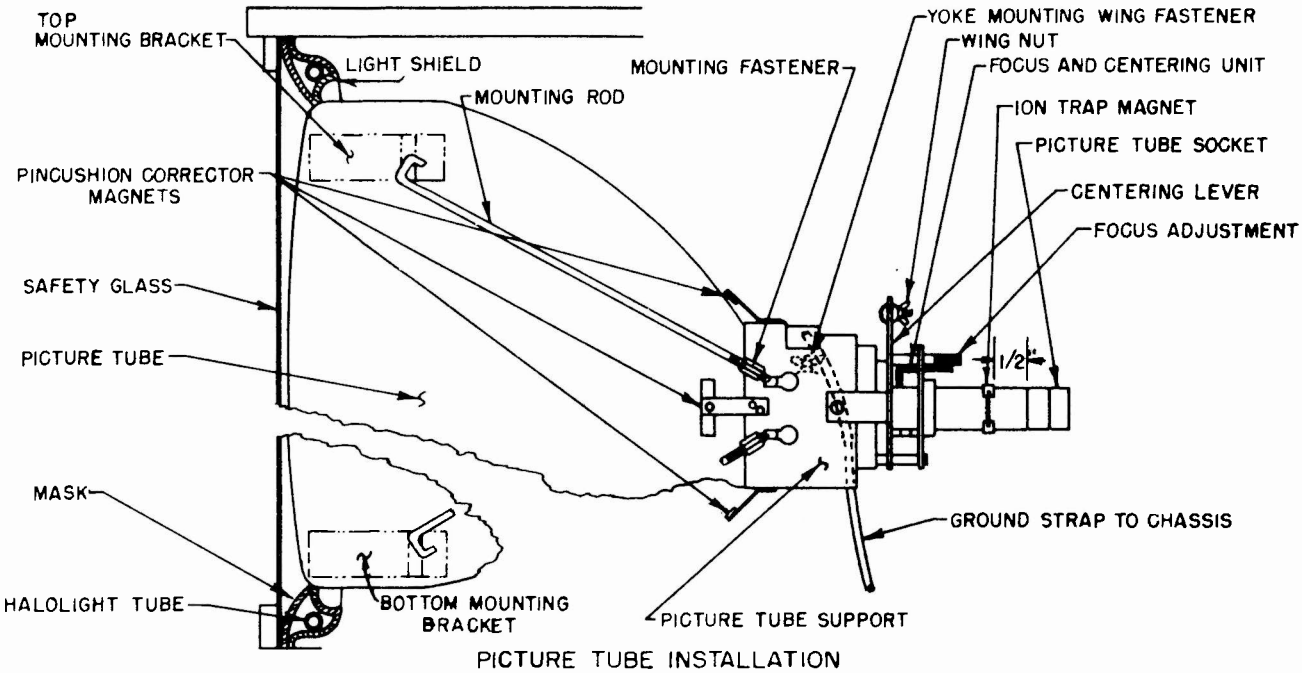

PICTURE TUBE INSTALLATION

HORIZONTAL AFC CIRCUIT ADJUSTMENT

1. Tune in a normal air signal and adjust L71 Horizontal Size control for approximately normal scan using a locked-in picture.
2. Turn receiver power "off" and connect shorting jumpers as follows:
   a. From junction of R212 (330 ohm) and T60 sync phase splitting coil to chassis.
   b. Across terminals of L68 Horizontal Frequency coil.
3. Turn receiver power "on" and tune in a normal air signal.
4. Rotate R259 Horizontal Hold control to center position.
5. Adjust R260 Horizontal Range control until picture moves back and forth across screen with blanking bar vertical
6. Remove shorting jumper from L68 Horizontal Frequency coil.
7. Adjust L68 Horizontal Frequency coil until picture moves back and forth across screen with blanking bar vertical.
8. Remove shorting jumper from junction of R212 (330 ohm) and T60 sync phase splitting coil to chassis.

SERVICE INSTRUCTIONS

REMOVAL AND CALIBRATION OF CHANNEL SELECTOR KNOB:

a. To remove Channel Selector knob, loosen (do not remove completely) knob retaining clamp screw. Knob may then be pulled off tuner shaft.

b. To calibrate Channel Selector knob, rotate Channel Indicator Dial in cabinet front until channel number that tuner is set to appears behind picture window glass. Install Channel Selector knob meshing its gears with those of the dial. Make any minor adjustments required to insure that dial number corresponds to tuner setting.

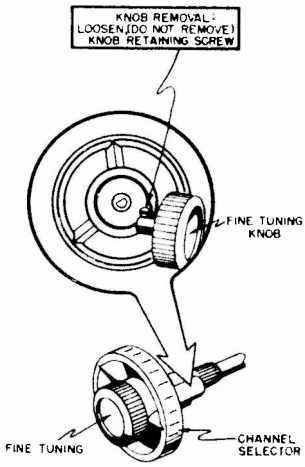

Service material on Chassis 1-522-1, -2, continued on the next five pages.

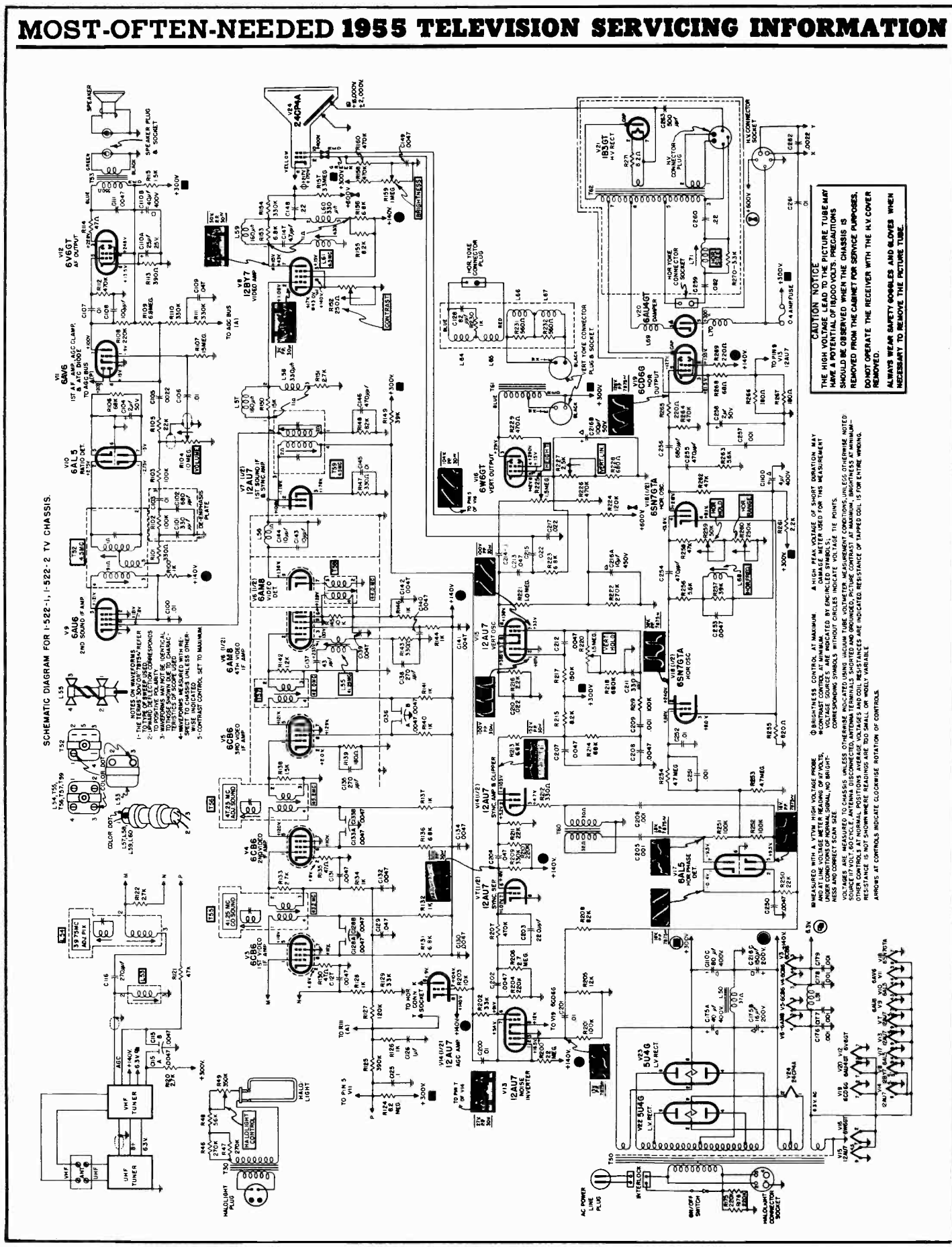
SCHEMATIC DIAGRAM FOR I-522-1, I-522-2 TV CHASSIS.
CAUTION NOTICE
THE HIGH VOLTAGE LEAD TO THE PICTURE TUBE MAY HAVE A POTENTIAL OF 18,000 VOLTS. PRECAUTIONS SHOULD BE OBSERVED WHEN THE CHASSIS IS REMOVED FROM THE CABINET FOR SERVICE PURPOSES.
DO NOT OPERATE THE RECEIVER WITH THE H.V. COVER REMOVED.
ALWAYS WEAR SAFETY GOGGLES AND GLOVES WHEN NECESSARY TO REMOVE THE PICTURE TUBE.

PREALIGNMENT INSTRUCTIONS
READ CAREFULLY

1. Stand chassis on side with high voltage shield down for under chassis adjustments.
2. Ground all test equipment unless otherwise stated.
3. Keep detector circuit leads as short as possible.
4. Allow test equipment and receiver chassis to warm up for 15 minutes after the intial equipment and AGC battery setup.
5. Deflection yoke should be connected during alignment.
6. Use non-metallic alignment tools for powdered iron cores. Metallic screwdriver may be used for brass screw adjustments.
7. Wrap a short length of insulated wire around pin 7 prong of V2 (6X8) tube in VHF tuner to facilitate test equipment connections.

Sylvania Electric Products
Chassis 1-522-1, -2
Models 596 Series
(Continued)

VIDEO IF ALIGNMENT

STEP	ALIGNMENT SETUP NOTES	TEST EQUIPMENT HOOKUP	ADJUST
1.	Connect 20V. battery (-) terminal to junction of C129 (.047 mfd.) and R128 (120K) and connect (+) terminal to chassis. Set VHF tuner to signal-free channel with minimum interference.	SIGNAL GENERATOR - to ungrounded tube shield on Osc./Mixer tube on VHF tuner. VTVM - D.C. Probe to junction of L58 peaking coil and R151 (2.7K).	L54 (top core) for MIN. at 39.75 MC. T55 (top core) for MIN. at 41.25 MC. L55 for MIN. at 41.25 MC. T56 (top core) for MIN. at 47.25 MC. Use sufficient signal generator output for satisfactory VTVM reading.
2.	Same as 1.	Same as 1.	T58 for MAX. at 44.0 MC. T57 for MAX. at 42.0 MC. T56 (bottom core) for MAX. at 45.2 MC. T55 (bottom core) for MAX. at 43.2 MC. Adjust signal generator output to keep VTVM reading between 1 and 2 volts.
3.	Repeat step 1 trap adjustments.		
4.	Remove 20V. AGC battery. Disconnect T55 lead from pin 5 of V3 (6CB6). Connect 330 ohm resistor across T55 primary from R132 (1K) to pin 5 of V3. Set VHF tuner to signal-free channel with minimum interference.	SWEEP GENERATOR - to pin 7 of V2 (6X8). Set to 43.5 MC with 10 MC sweep. SIGNAL GENERATOR - loosely couple to sweep generator lead. OSCILLOSCOPE - through detector circuit to pin 5 of V3 (6CB6). 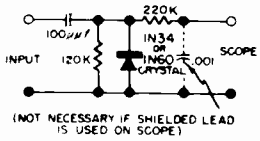	L54 (bottom core), L16 (VHF tuner) and L53 for response curve shown: 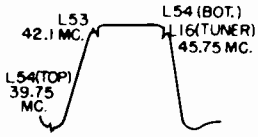
5.	Repeat step 4 adjustments until response curve is flat with 42.1 MC and 45.75 MC markers		
6.	Connect 20V. battery (-) terminal to junction of C129 (.047 mfd.) and R128 (120K) and connect (+) terminal to chassis. REMOVE 330 OHM RESISTOR AND RECONNECT T55. Set VHF tuner to signal-free channel with minimum interference.	SWEEP GENERATOR - to ungrounded tube shield on Osc./Mixer tube on VHF tuner. Set to 43.5 MC with 10 MC sweep. SIGNAL GENERATOR - loosely couple to sweep generator lead. OSCILLOSCOPE - through 33K resistor to junction of L58 peaking coil and R151 (2.7K).	Retouch T58, T57, T56 (bottom core) and T55 (bottom core) if necessary to obtain response curve shown: 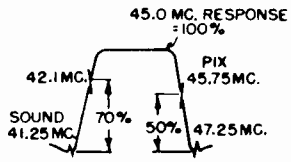

Sylvania Electric Chassis 1-522-1, -2, Alignment Information, Continued

4.5MC TRAP ALIGNMENT

STEP	ALIGNMENT SETUP NOTES	TEST EQUIPMENT HOOKUP	ADJUST
1.	Short pin 2 of V6 (6AM8) to chassis.	SIGNAL GENERATOR - to pin 2 of V8 (12BY7). Set to 4.5 MC. VTVM - R.F. Probe to pin 11 of V24 (Picture Tube); Ground Lead to chassis.	L61 for MINIMUM.

SOUND ALIGNMENT

STEP	ALIGNMENT SETUP NOTES	TEST EQUIPMENT HOOKUP	ADJUST
1.	Short pin 1 of V5 (6CB6) to chassis. DO NOT GROUND VTVM.	SIGNAL GENERATOR #1 - through 1K resistor to pin 2 of V6 (6AM8). Set to 45.0 MC. SIGNAL GENERATOR #2 - through 1K resistor to pin 2 of V6 (6AM8). Set to 4.5 MC. OR SIGNAL GENERATOR - through 1K resistor to pin 2 of V6 (6AM8). Set to 45.0 MC with a crystal controlled 4.5 MC marker. ALSO VTVM - D.C. Probe to pin 5 of V10 (6AL5); Ground Lead to pin 7 of V10 (6AL5).	T52 (both cores) for MAXIMUM. T59 (both cores) for MAXIMUM. Use peak resulting in greatest separation of cores. Repeat adjustments until maximum reading is reached.
2.	Same as 1.	USE SAME SIGNAL GENERATOR HOOKUP AS IN STEP 1. VTVM - D.C. Probe through 100K resistor to terminal #1 of de-emphasis plate; Ground Lead to junction of two matched 100K resistors connected in series across R106 (68K).	T52 (top core) for ZERO. Use lowest VTVM scale set to zero center. At correct core setting, a slight turn of core will give either a positive or negative reading.
3.	Remove test equipment and resistors; then, tune in a weak station and adjust T52 (top core) for optimum signal-to-noise ratio.		

ALTERNATE SOUND ALIGNMENT

STEP	ALIGNMENT SETUP NOTES	TEST EQUIPMENT HOOKUP	ADJUST
1.	Connect a good antenna installation to receiver. Set VHF tuner to a strong station. DO NOT GROUND VTVM.	VTVM - D.C. Probe to pin 5 of V10 (6AL5); Ground Lead to pin 7 of V10 (6AL5).	T52 (both cores) for MAXIMUM. T59 (both cores) for MAXIMUM. Use peak resulting in greatest separation of cores. Repeat adjustments until maximum reading is reached.
2.	Same as 1.	VTVM - D.C. Probe through 100K resistor to terminal #1 of de-emphasis plate; Ground Lead to junction of two matched 100K resistors connected in series across R106 (68K).	T52 (top core) for ZERO. Use lowest VTVM scale set to zero center. At correct core setting, a slight turn of core will give either a positive or negative reading.
3.	Remove test equipment and resistors; then, tune in a weak station and adjust T52 (top core) for optimum signal-to-noise ratio.		

Sylvania Electric Products
Chassis 1-522-1, -2
(Continued)

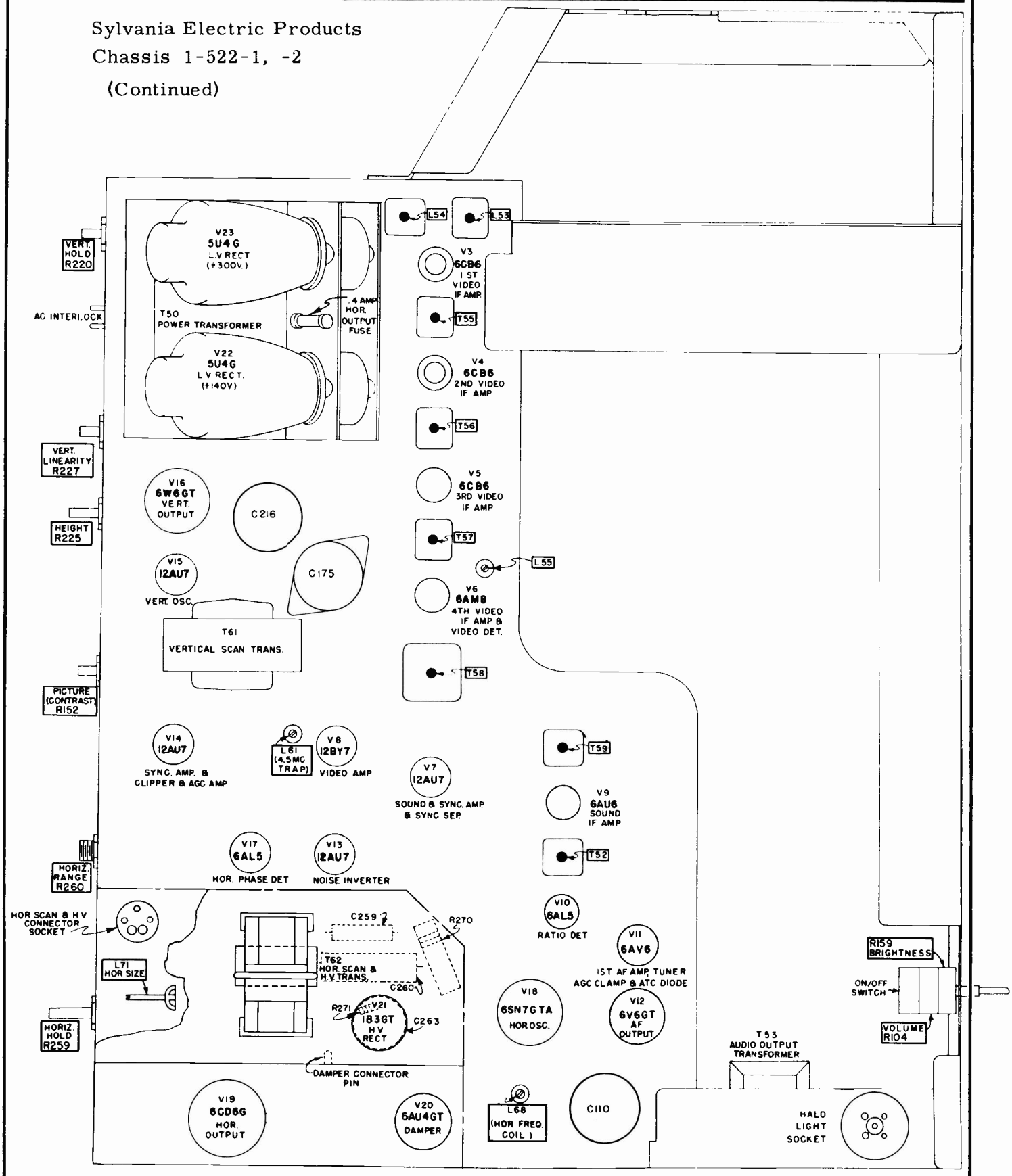

CHASSIS TOP PARTS LAYOUT

Sylvania Electric Products
Chassis 1-522-1, -2
(Continued)

CHASSIS BOTTOM PARTS LAYOUT

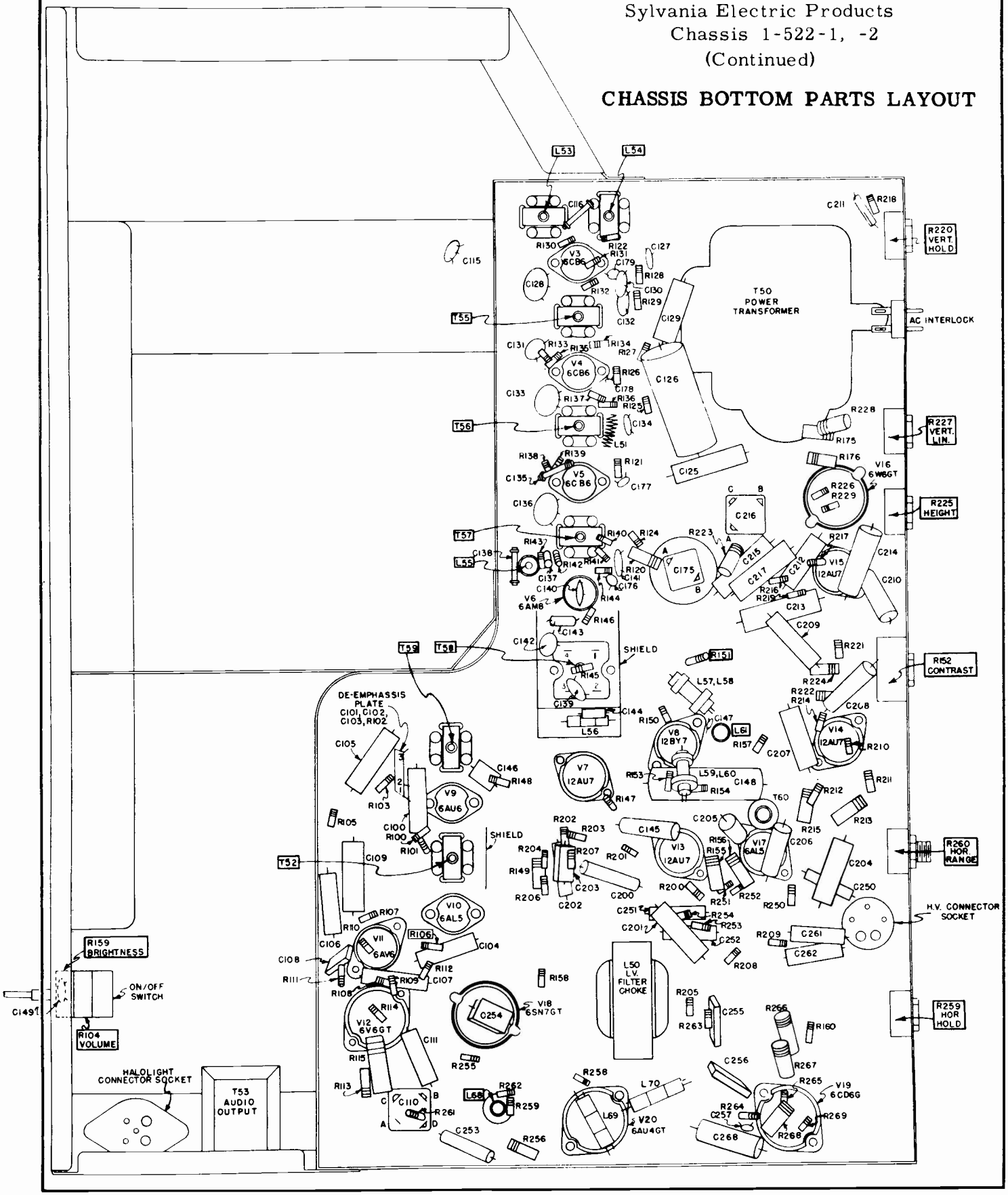

TRAV-LER RADIO CORPORATION

Chassis Nos. 48A3 and 48A4

The material on pages 167 through 170 is exact for chassis listed above.
Chassis 47A3 is the same except a different tuner is used.
Chassis 48C4 is very similar to these models.
Chassis 49A4 is almost the same, but uses still another type tuner.
The alignment information applies to all these chassis.

FRONT PANEL CONTROLS

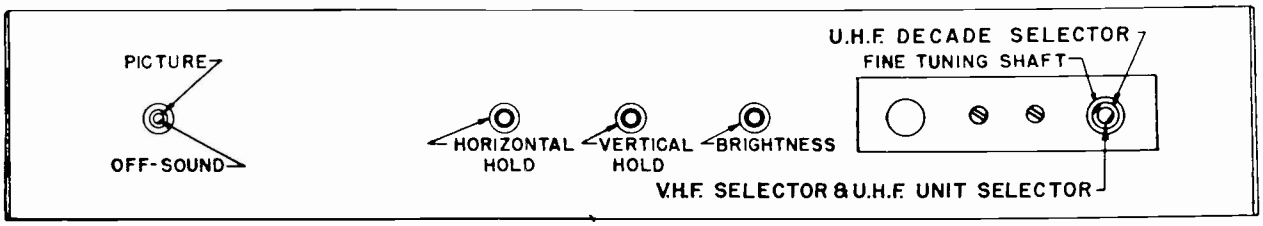

FIGURE-1

ALIGNMENT INFORMATION

The 40 Mc IF amplifier strip can be aligned by following the procedure listed below. These instructions are to be used in conjunction with schematic diagram

These IF transformers use a threaded coil form with a powdered iron core having a 3/16" hex center and is to be adjusted with a non-metallic alignment tool with a 3/16" hex stud. One such item is the Walsco 2526 molded-nylon tool.

1. **Tune receiver to channel 12.**
2. **Set PICTURE control fully counter-clockwise (minimum).**
3. **Connect negative lead of 3-volt battery at point (B) shown on schematic diagram; connect positive lead to chassis.**
4. **Connect vertical input of oscilloscope at point (A); connect ground lead to chassis.**
5. **Connect sweep generator (40 to 48 Mc) to loosely coupled shield of 6J6 or 6U8 oscillator-mixer tube making certain that shield is not grounded. Connect ground lead to chassis.**
6. **Connect synchronized sweep voltage from sweep signal generator to horizontal input of oscilloscope for horizontal deflection.**
7. **Marker generator frequencies are 41.25 Mc for sound carrier and 45.75 Mc for video carrier.**
8. **Adjust IF coils and transformers L-6, L-47, L-49, L-48, and L-50 for response curve similar to figure below with markers as shown.**
9. **L-6 Mixer plate coil of tuner tuned near center of pass band at approximately 43.5 Mc. Detuning affects dip at bottom of response curve.**
10. **L-47 IF input coil tuned near center of passband at approximately 44.5 Mc. Detuning affects dip at bottom of response curve.**
11. **L-49 (bottom) 1st IF transformer tuned to low side of pass band at approximately 42.5 Mc. Detuning affects low side of response curve. Sound carrier trap coil (top) tuned to 41.25 Mc.**
12. **L-48 (bottom) 2nd IF transformer tuned to high side of passband at approximately 45.5 Mc. Detuning affects high side of response curve. Adjacent channel sound carrier trap (top) tuned to 47.25 Mc.**
13. **L-50 3rd IF transformer tuned to center of passband at approximately 44 Mc. Detuning tilts bottom of response curve.**

MOST-OFTEN-NEEDED 1955 TELEVISION SERVICING INFORMATION

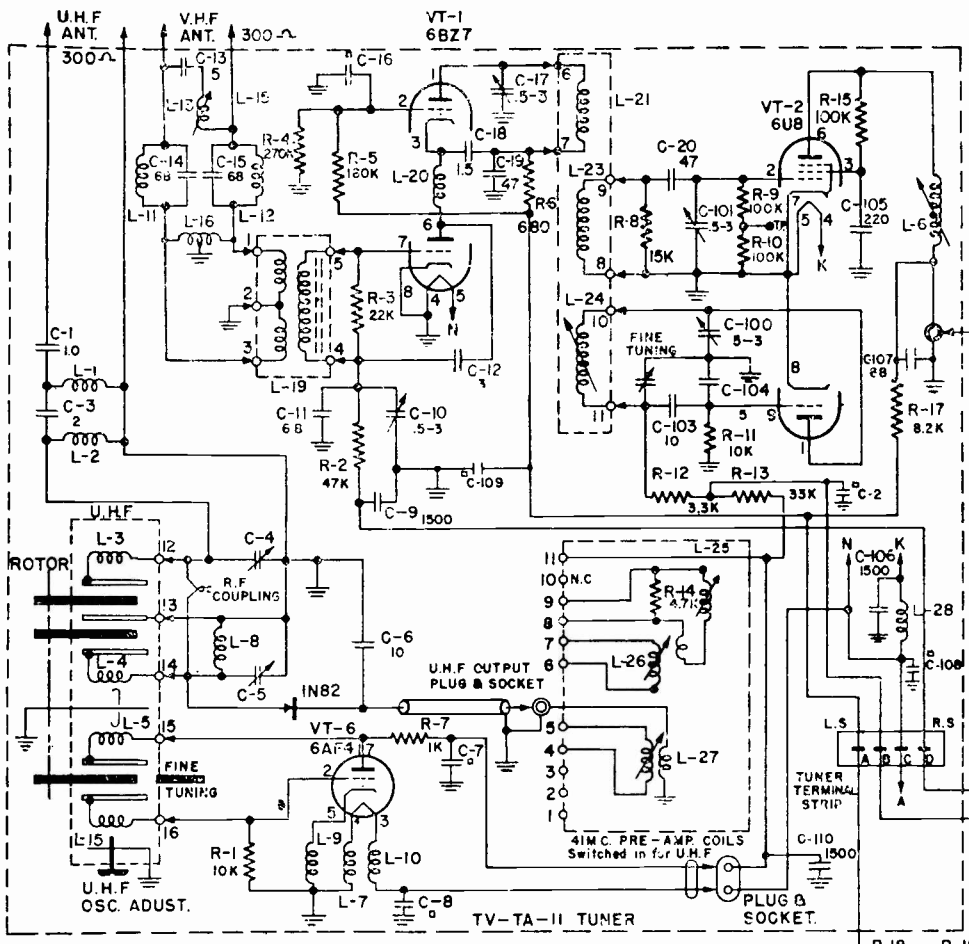

TUNER SHOWN IN V.H.F. POSITION

CAPACITORS ARE SHOWN IN MICRO MICRO FARADS UNLESS OTHERWISE SPECIFIED.

RESISTORS ARE 1/2 W. CARBON UNLESS OTHERWISE SPECIFIED.

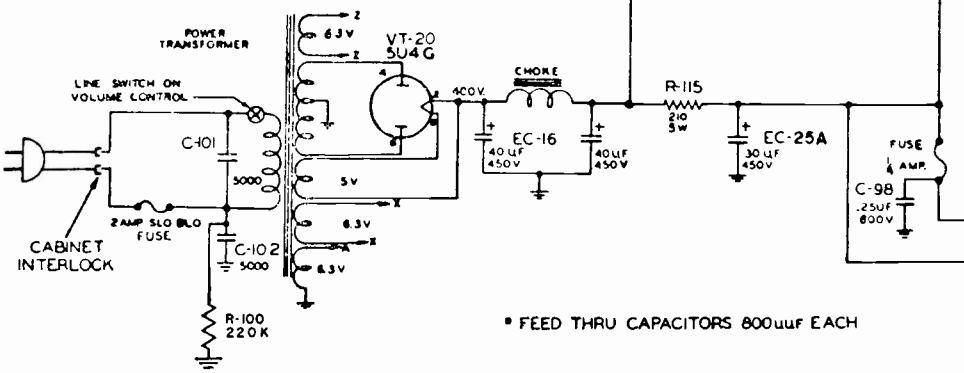

* FEED THRU CAPACITORS 800uuf EACH

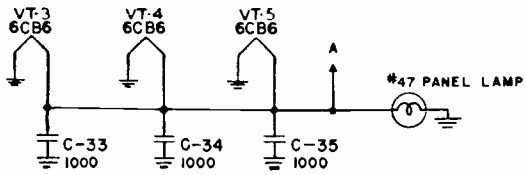

HEATER CHOKE DETAIL

1. LINE VOLTAGE 117V.AC. ALL VOLTAGES D.C.
2. ALL VOLTAGES MEASURED TO CHASSIS AND ARE POSITIVE UNLESS OTHERWISE SPECIFIED.
3. VOLTAGE READINGS TAKEN WITH ZERO SIGNAL INPUT AND PICTURE CONTROL SET MAX. CLOCKWISE. ALL OTHER CONTROLS SET FOR NORMAL OPERATION.
4. VOLTAGE READINGS TAKEN WITH AN ELECTRONIC VOLTMETER

TRAV-LER Chassis 48A3 and 48A4 Circuit Diagram

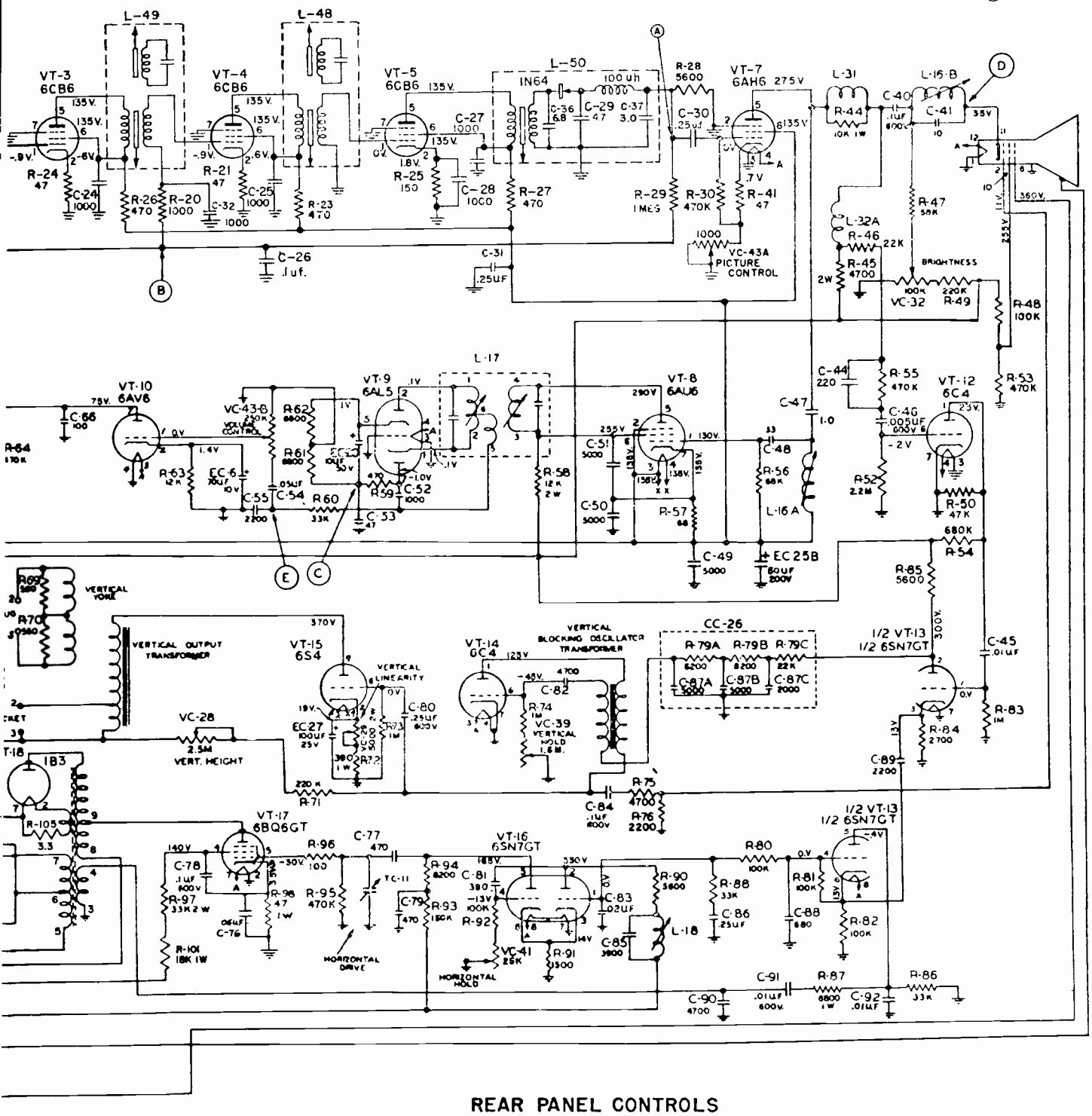

REAR PANEL CONTROLS

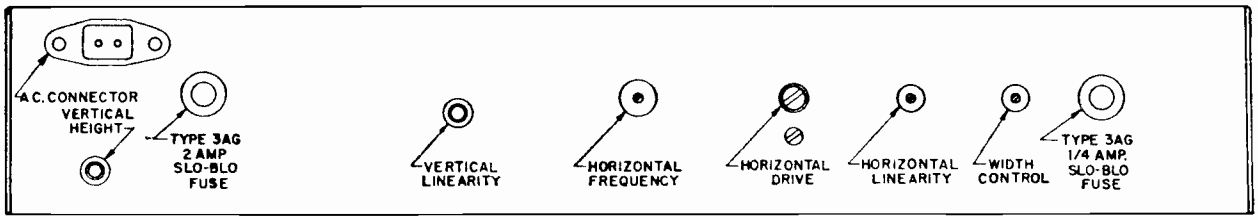

TRAV-LER ALIGNMENT INFORMATION (Continued)

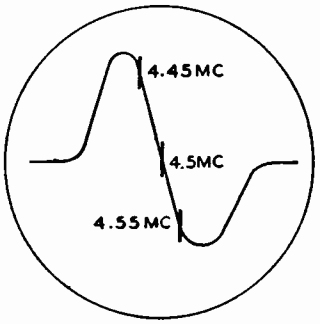

FIG. 7. Audio Response Curve

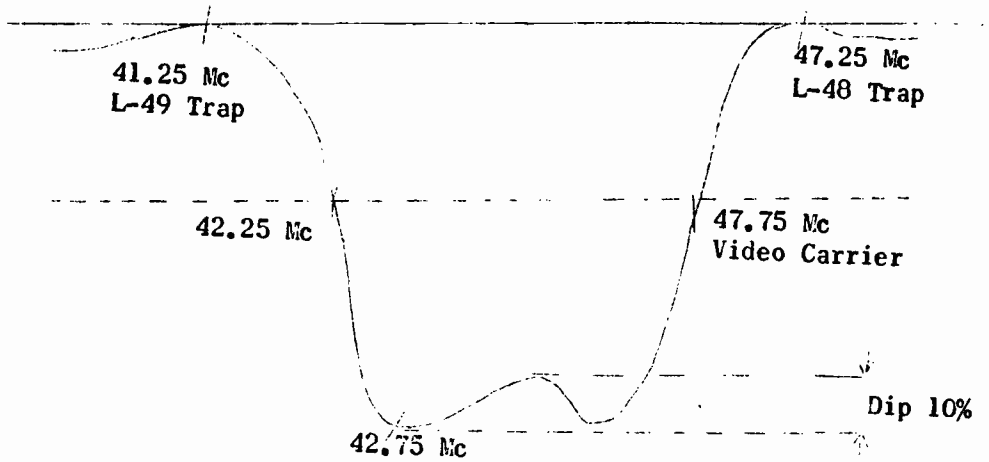

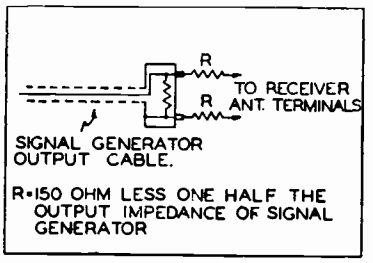

FIG. 4. Dummy Antenna Detail

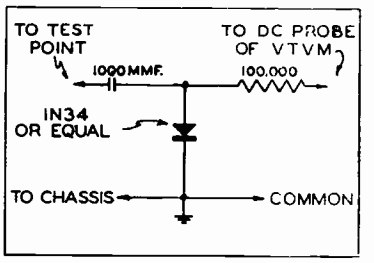

FIG. 5. Diode Detector Detail

SOUND IF AMP ALIGNMENT USING AM SIGNAL GENERATOR AND VTVM

DUMMY ANTENNA	SIGNAL GENERATOR COUPLING	SIGNAL GENERATOR FREQUENCY	CHANNEL	CONNECT VTVM	ADJUST	REMARKS
Direct	High side to point (A). Low side to chassis.	4.5 Mc (Unmod.)	Any channel unused locally.	Dc probe to point (C). Common to chassis.	L-16A and bottom adjustment of L-17.	Adjust for max. voltage at VTVM.
"	"	"	"	DC probe to point (E). Common to chassis.	Adjust top slug of L-17.	Adjust for zero voltage. A positive and negative reading will be obtained on either side of the correct setting.

CHECK ON SOUND IF AMP ALIGNMENT USING FM SIGNAL GENERATOR AND OSCILLOSCOPE

Connect the synchronized sweep voltage from the signal generator to the horizontal input of the oscilloscope for horizontal deflection.

DUMMY ANTENNA	SWEEP GENERATOR COUPLING	SWEEP GENERATOR FREQUENCY	MARKER GENERATOR FREQUENCY	CHANNEL	CONNECT SCOPE	ADJUST	REMARKS
Direct	High side to point (A). Low side to chassis.	4.5 Mc (500 Kc sweep)	4.45 Mc 4.5 Mc 4.55 Mc	Any channel unused locally.	Vertical amplifier input to point (C). Common to chassis.	L-17	Touch up the adjustments of L-17 maintaining max. amplitude while adjusting for max. steepness and straightness of the slope. See Fig. 7. Note that the 4.5 Mc marker pip tends to disappear as the correct setting of the top adjustment of L-17 is reached.

4.5 MC TRAP ADJUSTMENT

DUMMY ANTENNA	SIGNAL GENERATOR COUPLING	SIGNAL GENERATOR FREQUENCY	CHANNEL	CONNECT VTVM	ADJUST	REMARKS
Direct	High side to point (A). Low side to chassis.	4.5 Mc (Unmod.)	Any channel unused locally.	AC probe to cathode of picture tube. Test point (D). Common to chassis.	L-16B	Adjust for minimum voltage. A crystal detector shown in Fig. 5 may be used with the VTVM in place of a commercial AC probe if desired.

Westinghouse

CHASSIS ASSEMBLY V-2313 AND V-2323

CHASSIS ASSEMBLIES V-2313-15, V-2313-25, and V-2313-35

Several different variations of the V-2313 chassis are used in current production. The differences will be found in the type of CRT used and the mounting bracket of the off-on-volume control.

CHASSIS ASSEMBLIES V-2323-101, V-2323-201, and V-2323-301

When the letter "U" appears in the model number, it indicates that the receiver contains a type V-2323 chassis. The V-2323 chassis is identical to the V-2313 chassis with the exception that an all-channel VHF-UHF combination tuner has been factory installed to provide UHF reception of the UHF television channels (14 through 83) in addition to the VHF channels (2 through 13).

Several different variations of the V-2323 chassis are used in current production. The differences will be found in the VHF-UHF tuner combinations, the type of CRT used and the mounting bracket of the off-on-volume control. The dash numbers following the basic chassis number identifies these variations.

Models H-838K21B, H-841T21, H-842T21, H-843K21, H-844K21, H-847K21, H-848K21, H-861T21, H-862T21, H-863T21, H-864T21, H-865T21, H-866T21, H-867T21, H-868T21, H-871T21, and H-872T21.

Models with same numbers having letters KU in place of K and TU in place of T, contain a built-in all channel VHF-UHF combination RF tuner.

CHASSIS ASSEMBLY V-2314 OR V-2324

CHASSIS ASSEMBLIES V-2314-15 AND V-2314-25

Several different variations of the V-2314 chassis are used in current production. The differences will be found in the type of RF tuner and CRT used.

Models H-853K24, H-854K24, H-869K24, H-870K24, H-875T24,-A, H-876T24, H-877T24, H-878K24, and H-881K24.

Models with same numbers having letters KU in place of K, and TU in place of T, contain a built-in all channel VHF-UHF combination RF tuner.

All the sets listed on this page are similar in most respects. The alignment information on pages 172 and 173 is applicable to all sets. Since there are a number of important circuit differences between the two groups of chassis, the circuit diagram for Chassis V-2313 (and V-2323) is printed on pages 174-175, while the circuit for Chassis V-2314 (and V-2324) is on pages 176-177. Figure 6, top view of each type of chassis, is printed on page 178, and will aid you in locating tubes and alignment adjustments.

CRITICAL LEAD DRESS

All leads that can result in interaction between stages due to RF pick-up must be dressed close to the chassis. Leads in this category include the heater, AGC and B+ leads, these leads must be long enough to permit dressing close to the chassis.

All leads located near the horizontal multivibrator trimmer capacitor, C421, must be dressed away from the capacitor and close to the chassis.

Video peaking coils should be dressed away from the chassis and clear of adjacent parts.

The lead-in from the antenna terminals to the tuner must be dressed away from the IF strip to prevent "RF" tweet from interfering with the picture.

WESTINGHOUSE Chassis V-2313, V-2314, V-2323, V-2324, (Continued)

ION TRAP MAGNET

It is extremely important that the ion trap magnet be correctly adjusted immediately after the set is first turned on during installation. This is true even through the set appears to be operating satisfactorily. When the magnet is not correctly oriented, the electron beam strikes the edge of the aperture in the anode top disc instead of moving cleanly through the hole. The resultant heat vaporizes the metal of the disc, thus releasing gas which has a harmful effect on the tube. Some of the vaporized material may be deposited on the screen of the tube and be apparent as darkened area. An excessively high setting of the brightness control will aggravate this condition. From this it is apparent that the brightness control should never be turned up to compensate for an incorrectly adjusted ion trap magnet. The tube can be ruined in a very short time under this condition.

To adjust the ion trap magnet, position the magnet approximately as shown in Fig. 1. with the color code mark facing upward, than rotate the magnet and move it forward and backward until the position is found where the picture is brightest. If the brightness peaks at two positions of the magnet, the position nearer the base of the tube is the correct one. Never more the ion trap magnet to remove a shadow from the raster if the brightness is decreased by so doing. Shadows should be removed by adjusting the position of the deflection yoke. ***The ion trap magnet must always be adjusted for maximum picture brightness.***

WIDTH AND HORIZONTAL LINEARITY

The width adjustment on the back of the chassis controls the overall width of the picture, and the horizontal linearity adjustment controls the relationship between the horizontal dimensions of the left and the right sections of the picture. A balance between the two controls is necessary to make the picture symmetrical with correct horizontal dimensions. These controls are sliding type adjustments.

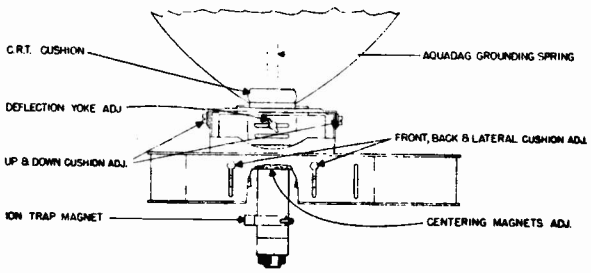

Fig. 1 CRT Adjustments

HEIGHT AND VERTICAL LINEARITY

The height adjustment on the back of the chassis controls the overall height of the picture, and the vertical linearity adjustment controls the relationship between the vertical dimensions of the upper and the lower sections of the picture. A balance between the two controls is necessary to make the picture symmetrical and fill the mask vertically.

VERTICAL HOLD

The vertical synchronization is controlled by the vertical hold adjustment. To adjust, rotate the control clockwise or counterclockwise until the picture is stabilized vertically. The adjustment should preferably be made on the weakest signal that is available, and a check should be made to see that the receiver pulls into sync on all channels.

HORIZONTAL RINGING COIL

The horizontal ringing coil (L400) should be adjusted as follows:

1. Short out the ringing coil with a short jumper wire.

2. Set the horizontal hold control to the middle of its range, and leave it in this position during the steps that follow.

3. Connect a VTVM to the pin #2 grid circuit of the horizontal multivibrator, so as to measure the DC voltage between this point and ground.

4. With the receiver tuned to a TV station, adjust C421 (located on the rear of the chassis) for **zero** voltage on the meter. If zero voltage can be approached but not quite reached at one extreme of the C421 adjustment, it may be necessary to set the horizontal hold control slightly to one side of mid-position to obtain zero voltage.

5. Remove the jumper from across the ringing coil.

6. Adjust the ringing coil for **zero** voltage on the meter, and check the adjustment by switching to another channel and then back again. The receiver should pull into horizontal synchronization on all channels.

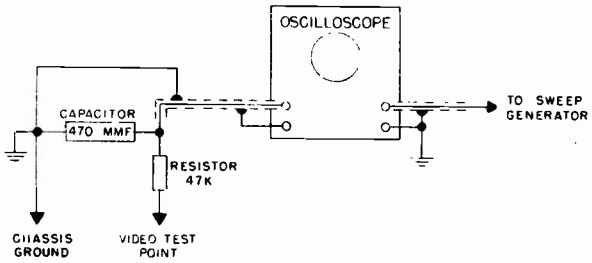

Fig. 2. Oscilloscope Connections

Westinghouse Chassis V-2313, 2314, etc. Alignment Charts, (Continued)

GENERAL INFORMATION

The chassis and test equipment should be bonded together by short lengths of heavy braided copper ribbon, and all interconnecting leads should be shielded and should be as short as possible consistent with ease in making connections.

ALIGNMENT TOOL

To adjust the slugs in the common I-F transformers a special tool is required. This tool must fit into the .035" x .093" slot in the slug. ***An incorrectly designed tool will cause chipping of the slug.*** A suitable tool is stocked under Westinghouse part number V-8345.

COMMON I-F SECTION

Rotate the channel selector to channel 13.

Connect the oscilloscope to the video test terminal, point "B" (V-2314 schematic diagram) through the decoupling network shown in Fig. 2.

Connect a 9 volt bias battery to the AGC line, point "A" on (V-2314 schematic diagram).

Couple the marker generator output to the sweep generator output. In the steps that follow, use the marker to check the response curve at the frequencies indicated on Fig. 4.

Step	Alignment Signal	Remarks	Adjustments
1.	Remove the RF amplifier tube.		
2.	44 mc. sweep to 3rd IF grid	Connect detuning clips to 1st & 2nd IF plates.	Pri. of T302 for max. response and sec. of T302 for symmetrical curve shown in Fig. 4A.
3.	47.25 mc. amplitude modulated to 1st IF grid	Use sufficient signal to produce sine wave response on oscilloscope.	L302 for min. response
4.	44 mc. sweep to 2nd IF grid	Connect detuning clip to 1st IF plate	Pri. of T301 for max. response and sec. of T301 for symmetrical curve shown in Fig. 4B.
5.	44 mc. sweep to 1st IF grid	Detune L103 before adjusting T300	Pri. of T300 for max. response and sec. of T300 for symmetrical curve
6.	44 mc. sweep to 1st IF grid		L103 for "suck-out" at 44 mc. (center of curve), See Fig. 4C.
7.	Replace the RF amplifier tube		
8.	213 mc. sweep to antenna terminals through network.	Fine tuning set to mid-range	L300 for symmetrical curve and L301 for min. 41.25 mc. marker amplitude. See Fig. 4D.

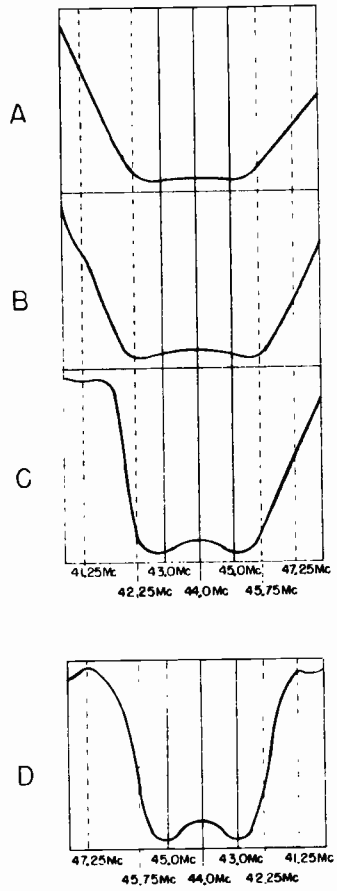

Fig. 4. Response Curves at Various Stages of Alignment

SOUND I-F SECTION AND 4.5 MC. TRAP

Connect the signal generator to the video test terminal (point "B") through a .001 mfd. capacitor.

Step	Signal Generator Frequency	VTVM Connections	Remarks	Adjustments
1.	4.5 mc. unmodulated	RF probe to point "C" (see V-2314 schematic diagram) and common lead to chassis.	Use strong signal from generator	L303 for minimum voltage
2.	4.5 mc. FM 7.5 kc. Dev.	Across volume control	Use strong signal from generator	L202 for maximum output
3.	Same as step 2	Same as step 2	Use weakest signal from generator.	L200, L201 and L202 for maximum output
4.	4.5 mc. AM 30% Mod.	Same as step 2	Start with weak signal increase as adjustment is made.	Quieting control for dip to zero.

WESTINGHOUSE Chassis V-2313 and V-2323 Circuit Diagram

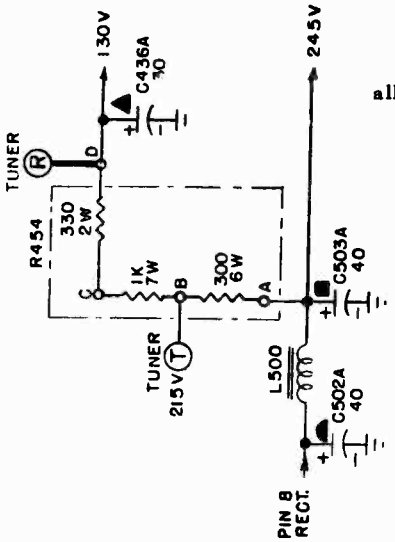

In models using chassis assemblies V-2323-101, V-2323-201 and V-2323-301 a combination VHF-UH all channel tuner, Part No. V-14130-1 is used.

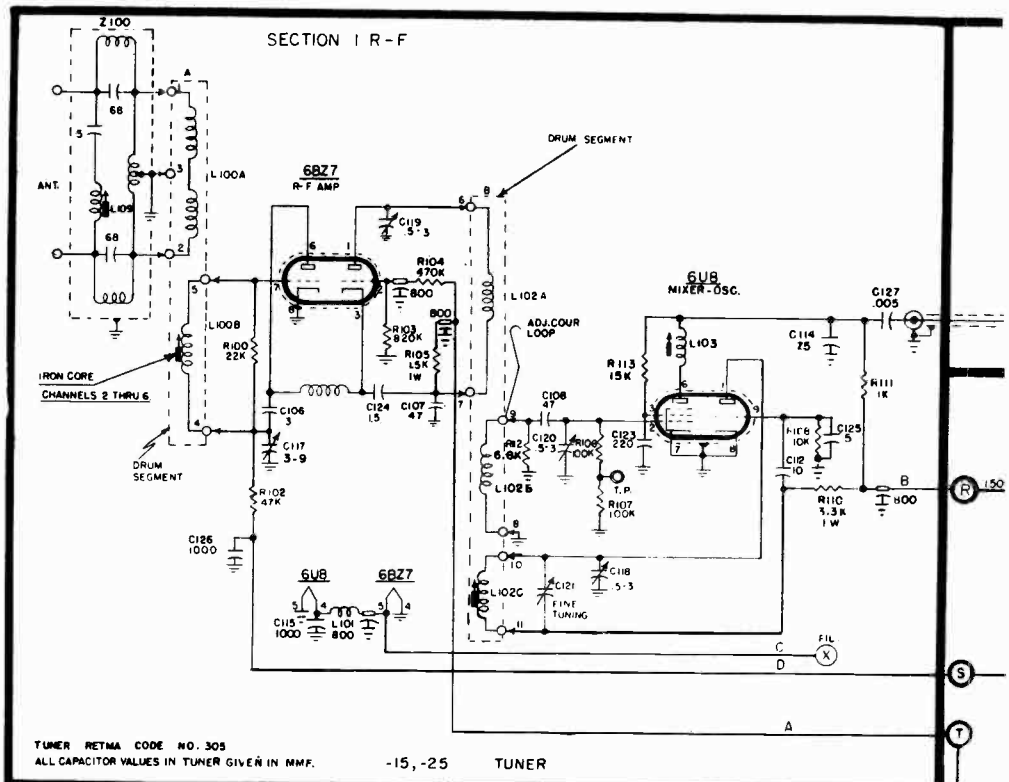

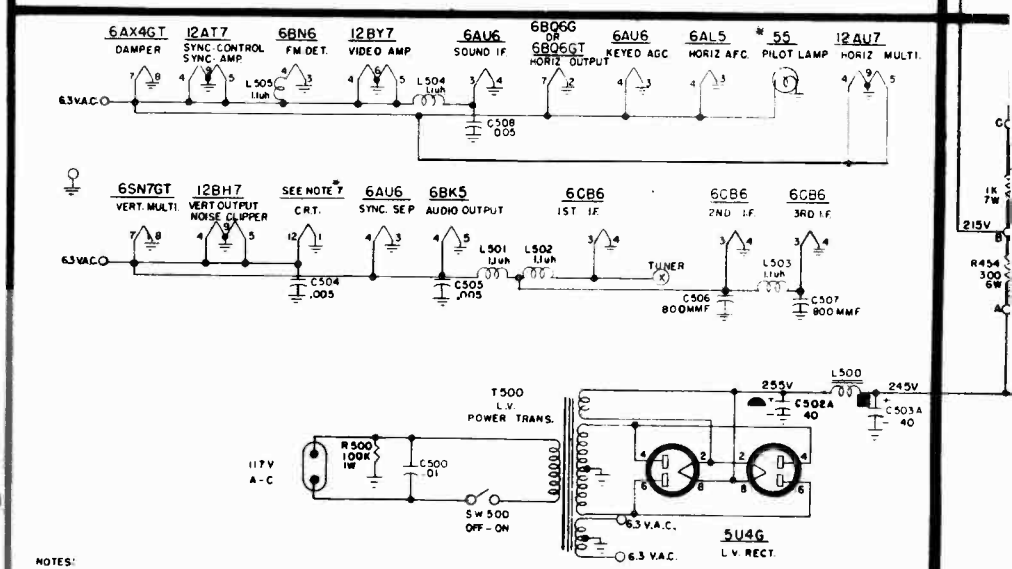

NOTES:

1. VOLTAGE WILL VARY WITH CONTROL SETTING.
   † = QUIETING CONTROL, ‡ = PICTURE, †† = VERT. HOLD CONTROL, ‡‡ = VERT. LIN. CONTROL.
2. PEAK-TO-PEAK WAVEFORMS WERE TAKEN WITH THE PICTURE CONTROL SET FOR SIGNAL OF 60V AT THE CATHODE OF C.R.T. ALL OTHER CONTROLS SET FOR NORMAL PICTURE.
3. PARTS TOLERANCE AND RESPONSE OF TEST EQUIPMENT MAY CAUSE SOME VARIATIONS OF THE PEAK-TO-PEAK VOLTAGE READINGS.
4. D-C VOLTAGES MEASURE FROM CHASSIS GROUND USING A 20,000 OHM/VOLT METER AND NO SIGNAL INPUT READING SHOULD BE AS SHOWN ± 20 PER CENT.
5. ALL CAPACITANCE VALUES IN MFD. AND ALL RESISTANCE VALUES IN OHMS UNLESS OTHERWISE SPECIFIED.
6. WATTAGE RATING OF ALL ½ WATT RESISTORS IS NOT SPECIFIED, OTHERS AS INDICATED.
7. 21YP4 IN -1 CHASSIS 21YP4A (ALUMINIZED) IN -2 CHASSIS.

SECTION 5 POWER and HEATERS

PRODUCTION CHANGES

1. Deflection Yoke
   To improve neutralization in the V-12118-4 yoke assembly (assembly contains V-14658-2 yoke), Capacitor C439 is changed from 51 mmf. to 47 mmf. part number V-9792-10470J.
2. Tuner B+ Voltage
   To reduce hum modulation and increase the filtering of the low B+ applied to the tuner. The low B+ voltage applied to the tuner is now taken off point D of the candohm resistor (R454) instead of point C.

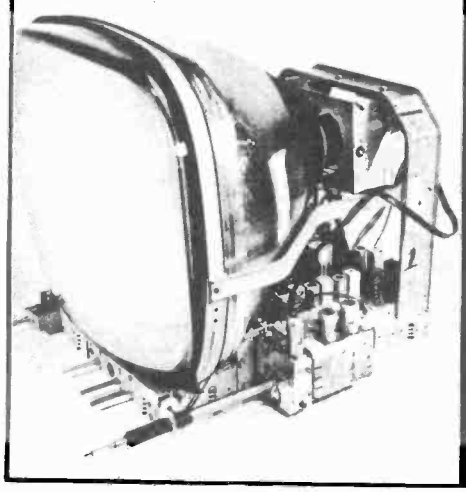

Westinghouse

Chassis V-2313 and V-2323 Circuit Diagram

In later production of the V-2213 or V-2323 chassis the horizontal output tube has been replaced by a 6BQ6GA or 6CU6 tube. Both tubes are directly interchangeable.

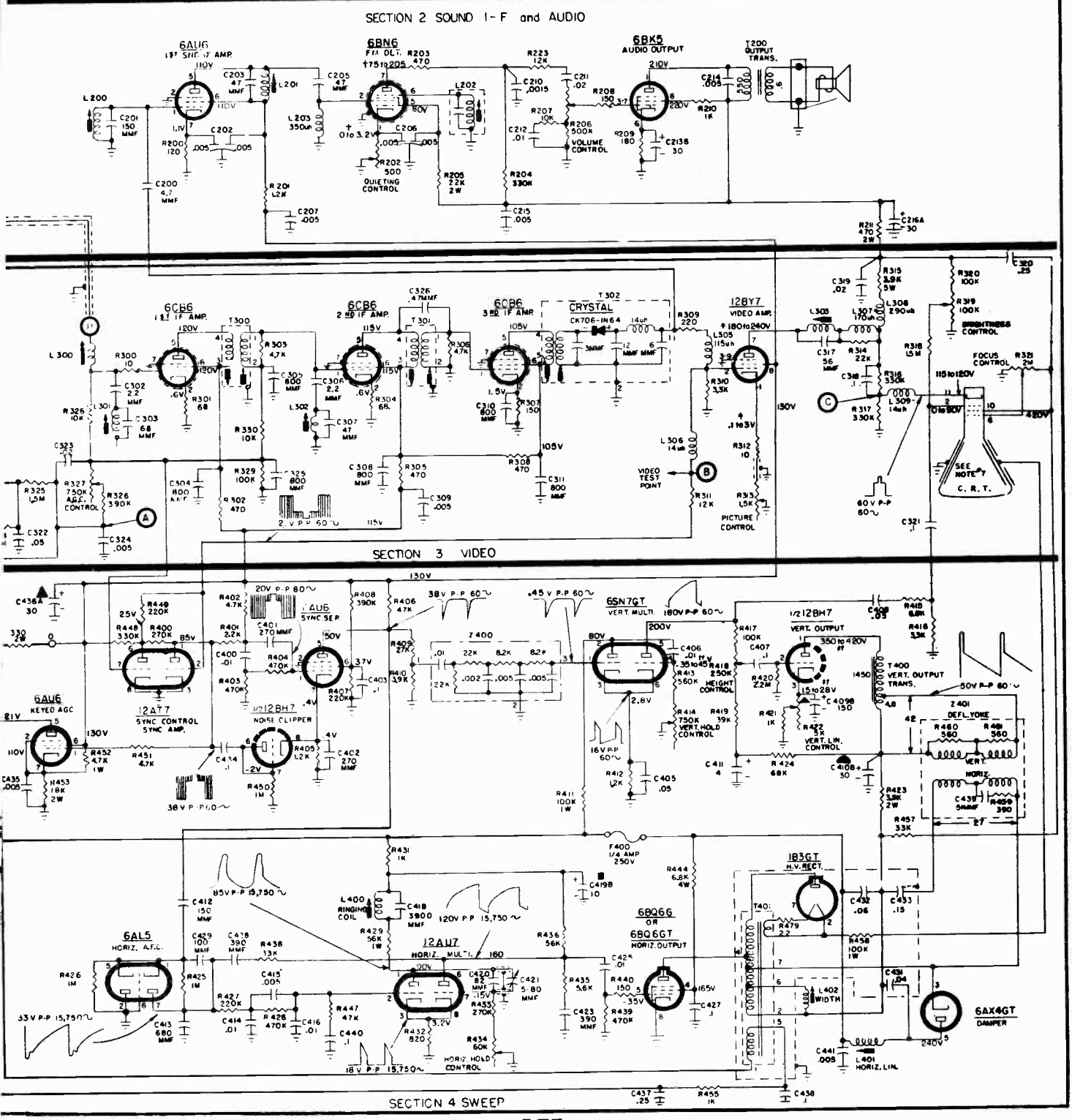

Westinghouse Chassis V-2314 and V-2324 Circuit Diagram

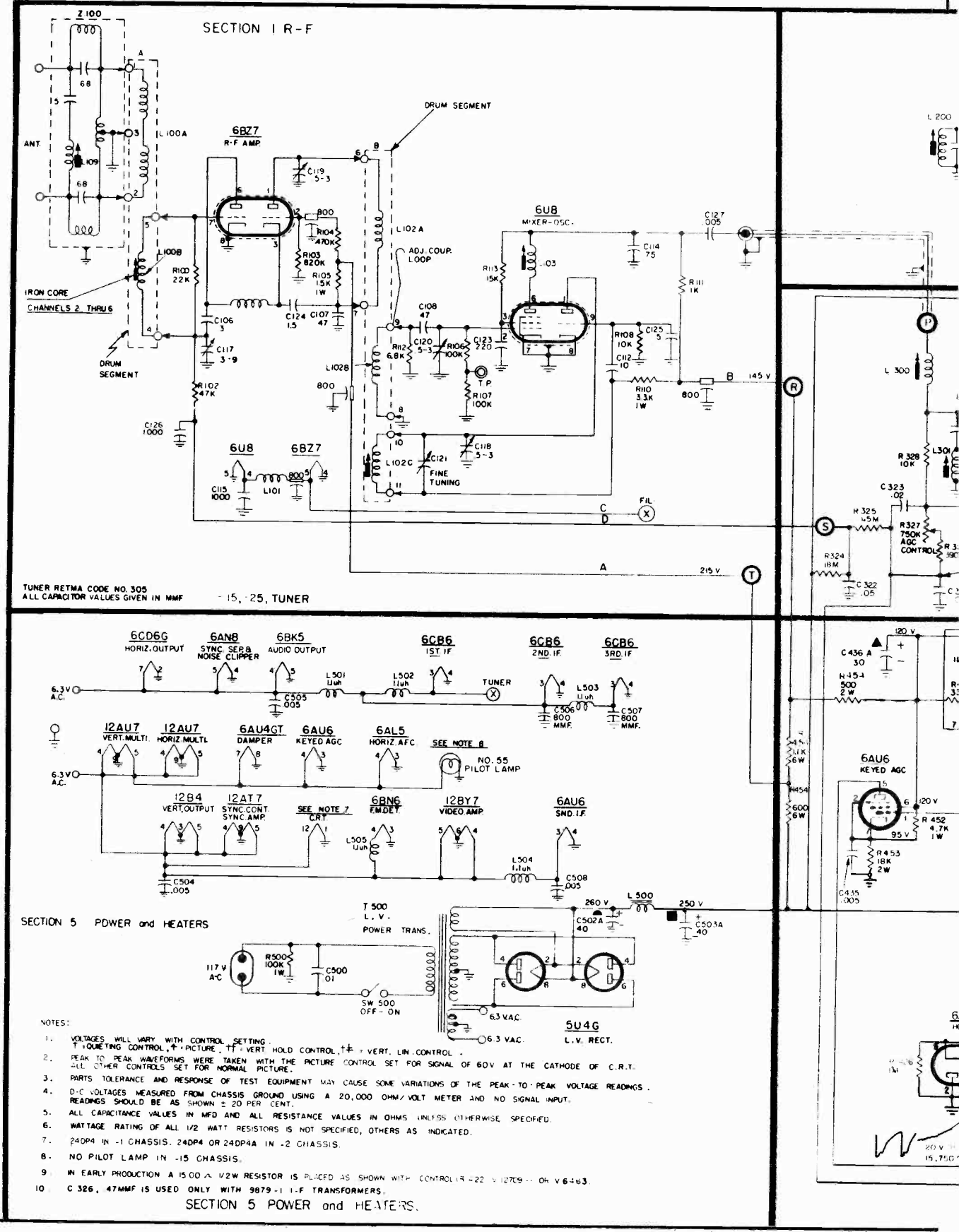

Westinghouse Chassis V-2314 and V-2324 Circuit Diagram

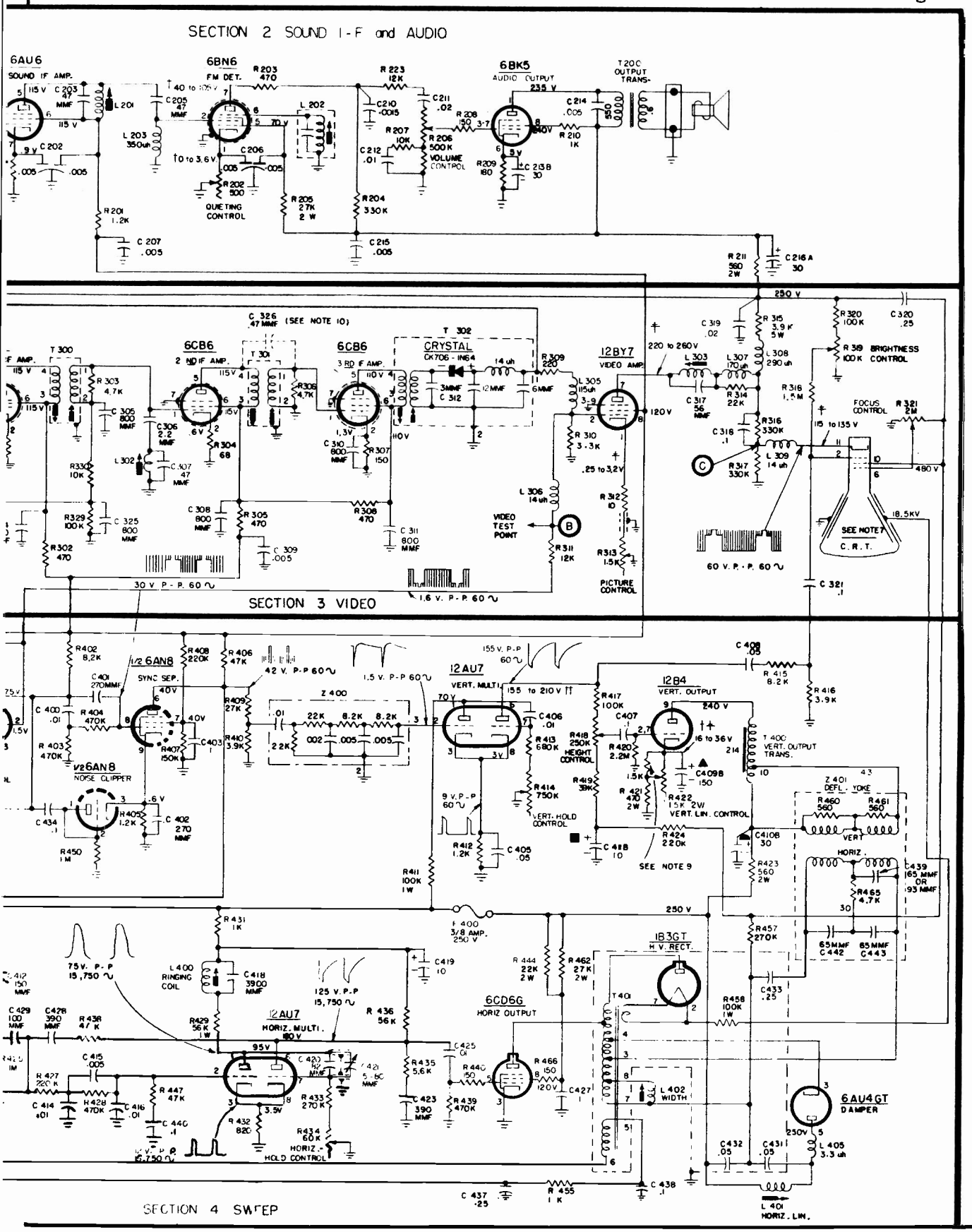

WESTINGHOUSE Chassis V-2313, V2314, V-2323, V-2324, (Continued)

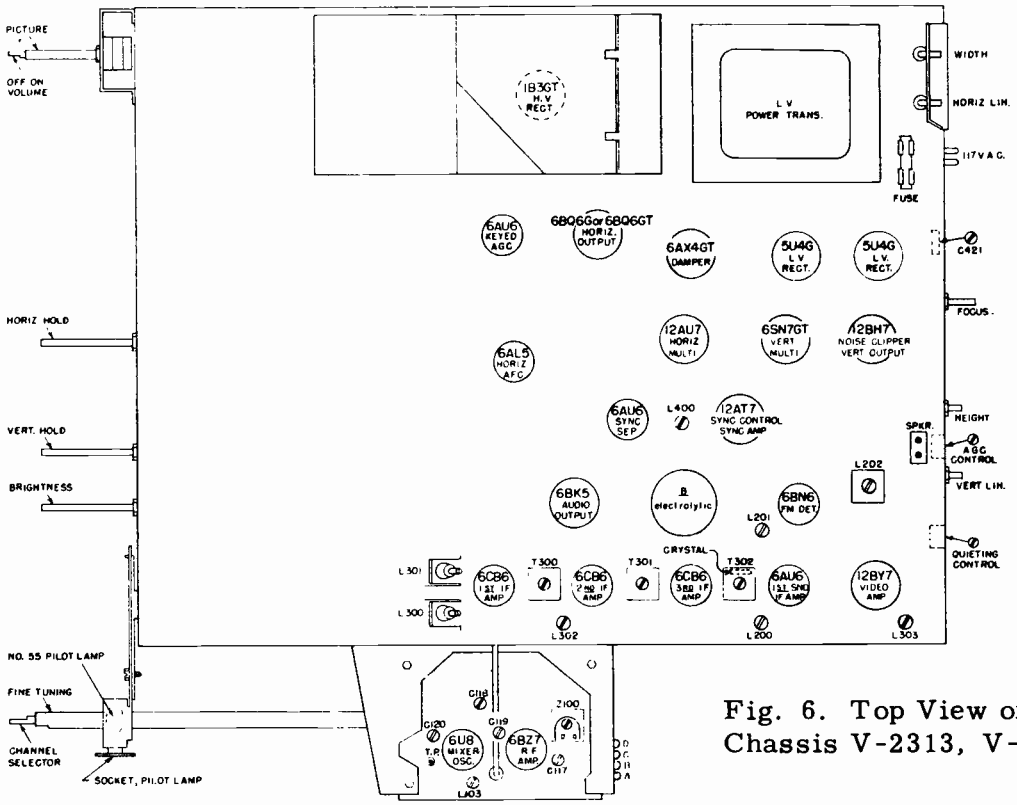

Fig. 6. Top View of Chassis V-2313, V-2323.

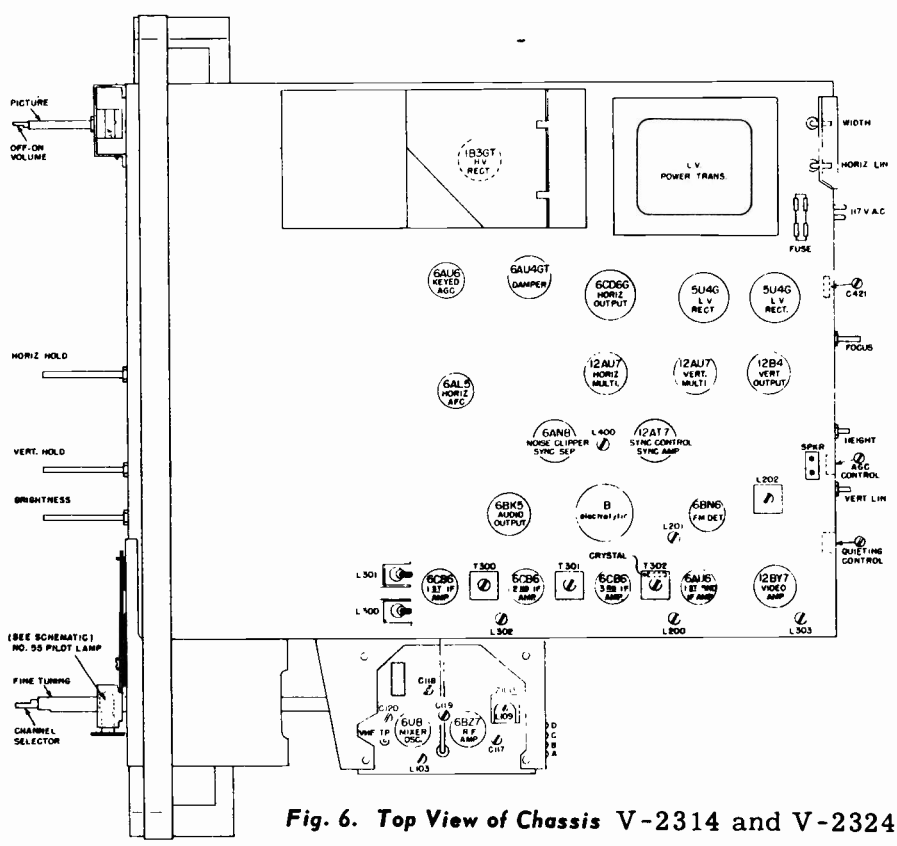

Fig. 6. Top View of Chassis V-2314 and V-2324.

ZENITH 1955 RECEIVERS

CHASSIS 19M20 - 19M20Z - 19M21 - 19M21Z
20M20 - 20M20Z - 20M21 - 20M21Z

CHASSIS 19R20 - 19R21 - 19R22
22R20 - 22R21

The various Zenith 1955 Chassis listed above are used in models tabulated below. All these sets are similar in design. Alignment and adjustment procedures given apply to all chassis. Suffix "U" indicates that a continuous tuner is used. Circuit on pages 184-185 is for the 19M series of sets. The 20M series covered by a separate circuit on pages 186-187 is similar to the basic 19M series except for horizontal output tube, and additional 5U4G rectifier to provide 18KV high voltage.

The circuit on pages 188-189 is exact for 19R series, 19R20 and 19R21 chassis. The 19R22 chassis is similar except that the tuner and volume control assemblies are externally mounted with plug-in cables as they are also in the 22R20 chassis. In general, the 22R series (22R20 and 22R21) is similar to the basic 19R series except for the horizontal output tube, an additional 5U4G rectifier, higher second anode voltage, and high fidelity sound. In addition, the receivers using the 22R chassis are equipped with phono connector, push pull audio, and different knob positions. The waveforms and peak-to-peak voltages shown in the circuit on pages 188-189 are representative for all chassis.

MODEL	TV CHASSIS
M1800E or R	19M20
M1800EZ	19M20Z
M1800RZ	19M20Z
M1800RZ1	19L34
M2228E or R	19M21
M2228RZ	19M21Z
M2229E or R	19M21
M2229EZ	19M21Z
M2229RZ	19M21Z
M2230E or R	19M21
M2230RZ	19M21Z
M2230RZ2	19M21
M2237EZ	20M20Z
M2237R	20M20
M2237RZ	20M20Z
M2249E or R	19M21
M2249RZ	19M21Z
M2250E or R	19M21
M2250EZ	19M21Z
M2250RZ	19M21Z
M2251EZ1	19L28
M2251RZ1	19L28
M2251Z1	19L28
M2252E or R	19M21

MODEL	CHASSIS
M2252EZ	19M21Z
M2252RZ	19M21Z
M2258RZ1	19L28
M2260R	20M20
M2260RZ	20M20Z
M2261E	20M20
M2261EZ	20M20Z
M2267Y	20M20
M2267YZ	20M20Z
M2570R	20M21
M2570RZ	20M21Z
R1800E & R	19R20
R1800EZ & RZ	19M20
R1812E & R	19R20
R1812EZ & RZ	19M20
R2229E & R	19R21
R2229EZ & RZ	19M21
R2230E & R	19R21
R2230EZ & RZ	19M21
R2249E & R	19R21
R2249EZ & RZ	19M21
R2250E & R	19R21
R2250EZ & RZ	19M21

MODEL	CHASSIS
R2253M	19R21
R2257 E & R	19R22
R2258E & R	19R21
R2258EZ & RZ	19M21
R2337E & R	22R20
R2359E & R	22R20
R2360R	22R20
R2368R	22R20
R2367E & Y	22R20
R2387R	22R20
R2391E	22R20
R2671E & R	22R21
R2975R	22R21
R2976E	22R21
R2979E	22R21
R2994EU	22R21
R2994HU	22R21

E - Blond
H - Cherry
M - Maple
R - Mahogany
Y - Ebony

SUFFIX "U" FOLLOWING ANY MODEL NUMBER INDICATES A RECEIVER EQUIPPED WITH THE ZENITH CONTINUOUS TUNER

ZENITH (Continued)

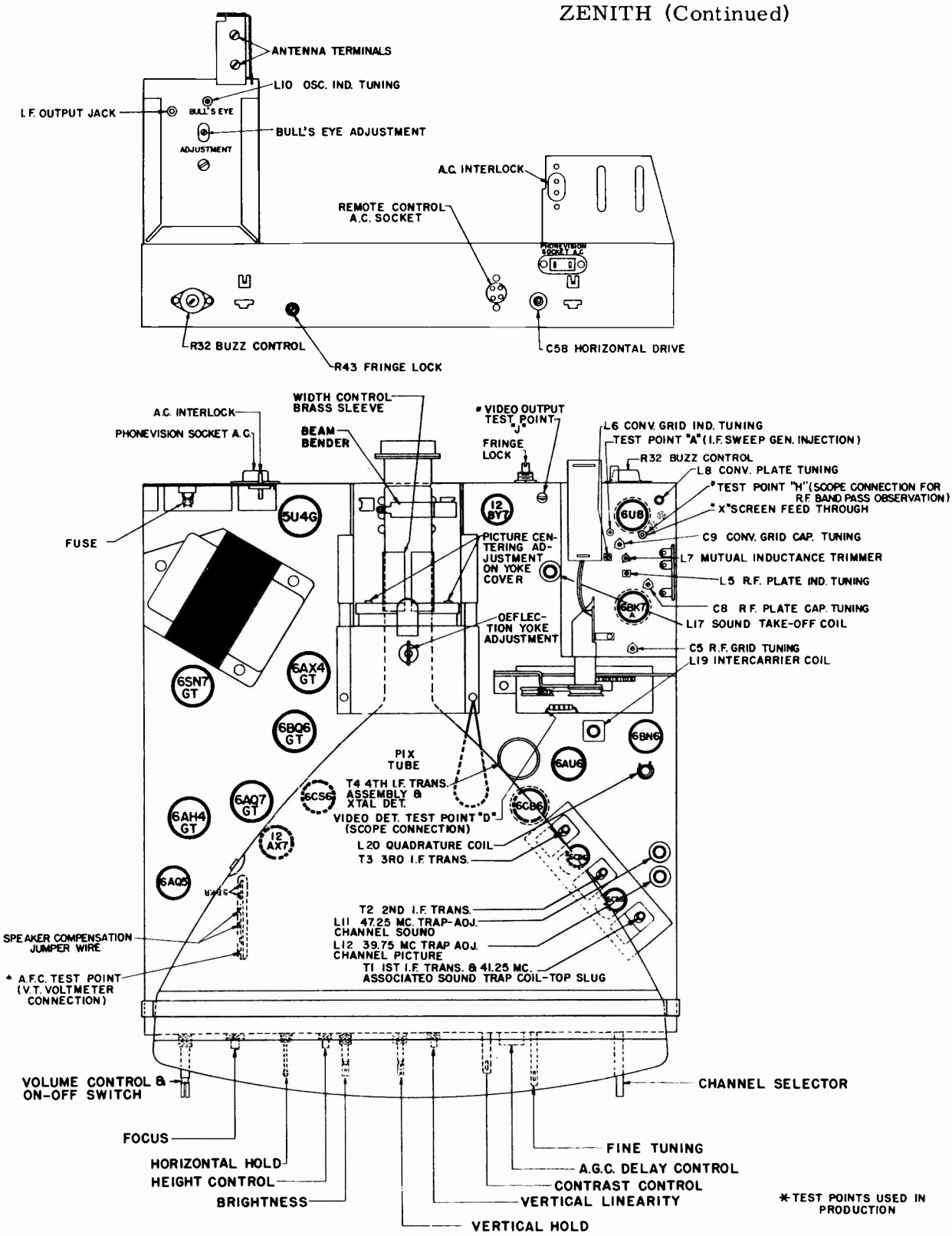

Fig. 4 Tube And Trimmer Layout 19M20, 19M20Z, 19M20U, 19M20UZ, 19M21, 19M21Z, 19M21U, 19M21UZ & 19M22UZ.

Zenith 1955 Chassis (Continued)

FRINGE LOCK ADJUSTMENT

1. Turn the fringe lock control fully clockwise and then back it off approximately 1/4 turn. Adjust the vertical and horizontal hold controls and check operation of the receiver to see that it syncs normally when the turret is switched from channel to channel.

2. If the picture jitters or shows evidence of delay, tearing, split phase, etc., back down the fringe lock control further, a few degrees at a time, each time re-adjusting the hold controls and switching from channel to channel until normal sync action is obtained. It will be found that under normal signal conditions, the correct adjustment will be near the counter-clockwise position of the control.

3. In fringe and noisy areas, the best adjustment will be found at or near the maximum clockwise position of the control, however, do not automatically turn the fringe lock fully clockwise in fringe areas as has been done on previous models. Always follow the procedure outlined.

BULLS EYE TUNER ADJUSTMENTS

To adjust the receiver for bulls-eye tuning, set the fine tuning control to its approximate center position as shown in Fig. 1 . Without further adjustment of the fine tuning control insert a 68-21 alignment wrench into the tuner (See Fig. 11) and adjust each operating channel to resonance. It will be noted that tuning to one side of resonance results in a faded, washed-out picture with the spacing between the wedge lines fogged and tuning in the opposite direction causes the spaces between the lines to clear up. However, going beyond this point causes the picture to take on a "wormy" appearance from sound getting into the picture. Correct adjustment is obtained by tuning to the "wormy" picture and then backing the control off slightly until the picture clears up.

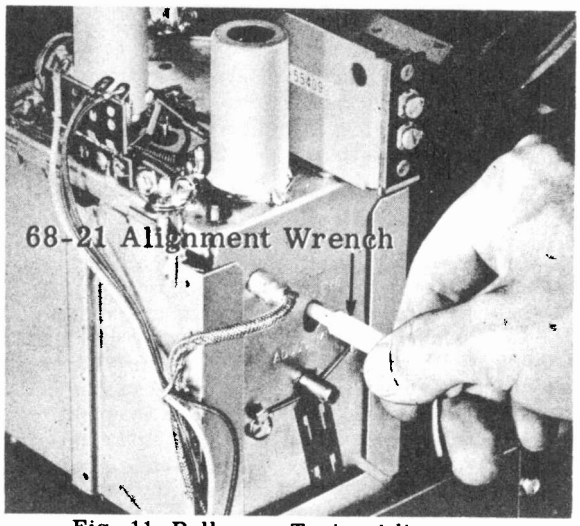

Fig. 11 Bulls-eye Tuning Adjustment

AGC ADJUSTMENTS

IMPORTANT: THE AGC CONTROL CANNOT BE USED IN ANY WAY TO IMPROVE THE RECEIVER SENSITIVITY. The sole function of this control is to set the level applied to the video amplifier (12BY7) tube so that the output of this tube is approximately 100 volts peak (100% modulated video signal) for application to the picture tube cathode.

The adjustment can also be made by connecting a calibrated oscilloscope through a 10K isolation resistor, to test point "D", and, while receiving the strongest TV signal adjust the AGC delay control for 2.75 volts peak output.

Satisfactory adjustment can also be made by observing the picture and slowly turning the AGC delay control from its maximum clockwise position, counterclockwise until a point is reached where the picture distorts and buzz is heard in the sound. The control should then be turned slowly clockwise and set at a point comfortably below this level of intercarrier buzz, picture distortion and improper sync.

REMOVING CHANNEL STRIPS

1. Rotate the turret drum until the strip to be removed is readily accessible.

2. Insert a small screwdriver in the slot (See Fig. 13). Push in the direction of arrow until the channel strip clears the drum slot then lift straight out in direction of screwdriver shaft. Some strips have a round hole instead of a slot and a pointed tool is used in place of the screwdriver.

CAUTION: TO AVOID DAMAGE TO CHANNEL STRIPS, DO NOT USE PRYING ACTION IN REMOVING STRIPS.

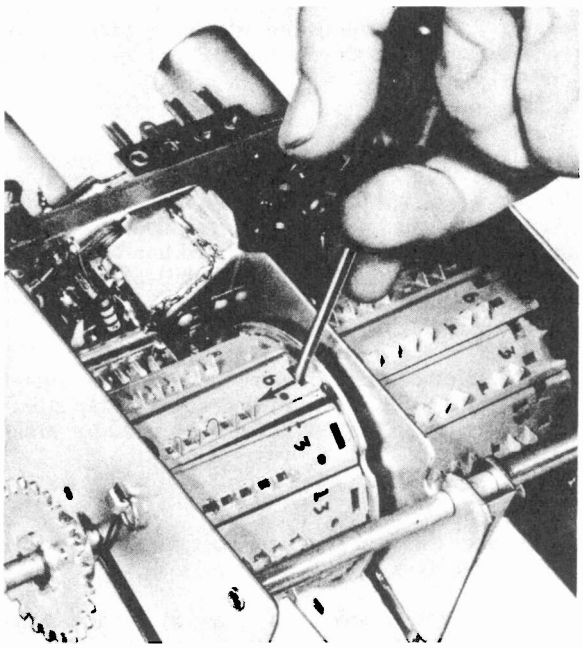

Fig. 13 Removing Channel Strips.

ZENITH 1955 Chassis (Continued)

ALIGNMENT

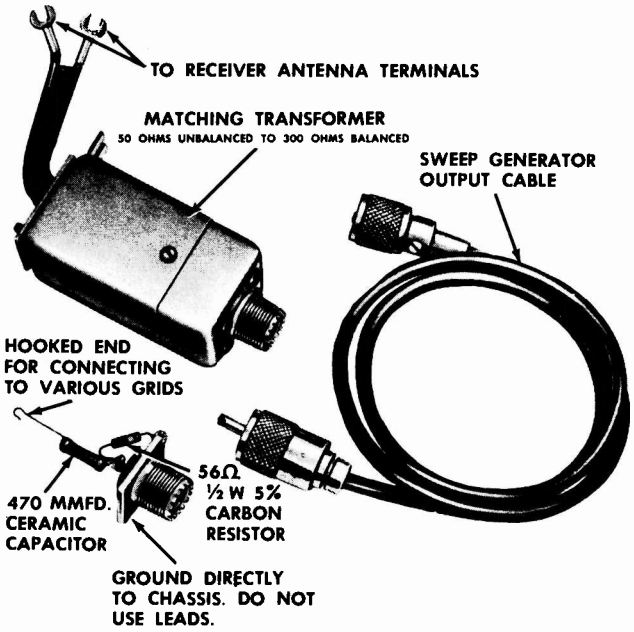

Fig. 14 IF-RF Alignment Fixtures

A suitable VHF and UHF sweep generator in conjunction with an accurate marker must be used for alignment work. It is very important to have the sweep generator output cable properly terminated and to check whether or not its attenuator is reactive. If the attenuator is reactive or if the output cable is improperly terminated, correct alignment cannot be made since the degree of attenuation then may change the shape as well as the amplitude of the response curve. The position of the attenuator should only vary the amplitude and not the shape of the response curve.

SOUND ALIGNMENT

Proper alignment of the 4.5 Mc intercarrier sound channel can only be obtained if the signal to the receiver antenna terminals is reduced to a level below the limiting point of the 6BN6 Gated Beam Detector. This level can be easily identified by the "hiss" which then accompanies the sound.

Various methods may be used to reduce the signal level, however, it is recommended that a step attenuator similar to the S-17203 unit be used for most satisfactory results.

1. Connect the step attenuator between the antenna and the receiver antenna terminals.

2. Tune in a tone modulated TV signal and adjust the step attenuator until the signal is reduced to a level where "hiss" is heard with the sound.

3. Adjust the sound take-off coil L17 (top and bottom slugs), intercarrier coil L19, quadrature coil L20 and buzz control R32 for the cleanest sound and minimum buzz. It must be remembered that any of these adjustments may cause the "hiss" to disappear and further reduction of the signal will be necessary so that the "hiss" does not disappear during alignment.

If intercarrier buzz is in evidence, after all normal sound adjustments have been made, the cause may be attributed to one or more of the following:

1. Improper adjustment of the AGC delay control.

2. Defective 6AU6 sound limiter.

3. Extremely high signal levels which require attenuation in the antenna circuit.

4. Transmitter over modulation.

VIDEO IF ALIGNMENT

1. Slowly turn the channel selector until the turret is made to rest between two channels. Connect the negative lead of a 2 volt battery supply to terminal "E" (Fig. 27) and the positive lead to chassis. The bias supply should be made variable so that it can be varied from negative 3 volts to positive 3 volts. Keep the supply leads short.

2. Connect the calibrated oscilloscope through a 10,000 ohm isolation resistor between terminal "D" and chassis. The sweep generator input to the receiver should be adjusted for 3 volts peak to peak detector output. Do not exceed this output level during any of the adjustments.

3. Feed the output from the sweep generator through the special termination unit shown in Fig. 14 to point "C" (Pin 1 of 6CB6, 3rd IF). Adjust the generator until a pattern similar to Fig. 16 is obtained.

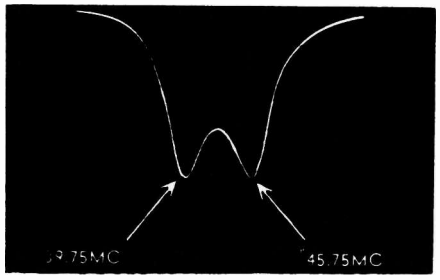

Fig. 16 4th IF Response.

4. Set the Marker Generator to 45.75 Mc and alternately adjust the top and bottom slugs of the 4th IF transformer for maximum gain and symmetry with the 45.75 Mc markers positioned as shown in Fig. 16 The 39.75 Mc marker can be within ±0.5 Mc of the specified frequency. If the correct response curve cannot be obtained in this step, check the position of the two slugs to see that they are entering their respective coils from the opposite ends of the coil form. The position of the slugs near the center of the coils may change the coefficient of coupling, making correct alignment difficult if not impossible.

Zenith Chassis 19M20, 19M20Z, 19M21, 19M21Z, 20M20, 20M20Z, 20M21, 20M21Z, 19R20, 19R21, 19R22, 22R20, 22R21.

5. Connect the sweep generator cable to terminal "A" (Mixer Grid). In this step it may be necessary to temporarily reduce the bias to zero or even to go to a slightly positive voltage in order to see the highly attenuated trap slots with the oscilloscope vertical gain near maximum.

6. Adjust the 47.25 Mc, 41.25 Mc (Top slug of 1st IF transformer) and 39.75 Mc traps for minimum marker amplitude, See Fig. 17 . It can be seen that maximum oscilloscope gain has been used and as a result the top of the response curve has been "run off" the oscilloscope screen in order to see a "blow-up" of the trap slots.

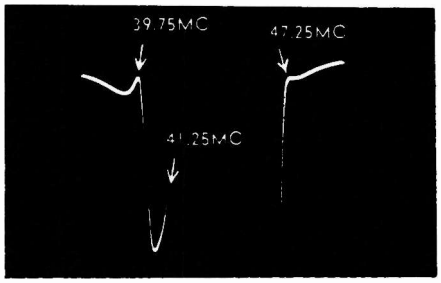

Fig. 17 Exploded View of Traps.

7. Readjust the bias to -2 volts and set the oscilloscope vertical gain to the calibrated position. Adjust the sweep generator for a 3 volt peak to peak output from the video detector.

8. With the test equipment set up as in Step 7, alternately adjust the 2nd IF, 3rd IF, 1st IF and the converter plate coil until an overall response curve similar to Fig.18 is obtained. Do not adjust the 4th IF in this step. It will be found that the 2nd IF affects the low side (42.75 Mc) and the 3rd IF the high side of the response curve.

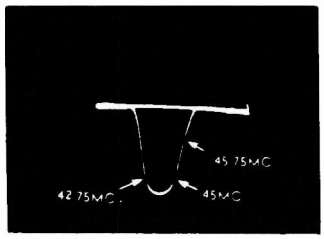

Fig. 18 Overall IF Response.

TURRET TUNER ALIGNMENT

The RF chassis adjustments have been made at the factory and normally do not require readjustment in the field unless tampered with. If adjustment becomes necessary check the overall IF response and proceed as follows:

1. Temporarily ground the turret AGC by connecting a jumper between the AGC bus (yellow lead) and chassis. (If sufficient output from the signal generator is available moderately better results may be obtained with 2 volts of bias.)

2. Connect the calibrated oscilloscope to the feed through terminal "H" (Fig. 4) through a 10K isolation resistor. This terminal is the screen of the 6U8 mixer.

3. Use a 50 to 300 ohm matching transformer (Fig. 14) and feed the output from the sweep generator to the antenna terminals of the receiver.

4. Turn the channel selector to Channel 4 and adjust the sweep generator until a response curve somewhat similar to Fig. 19 is obtained.

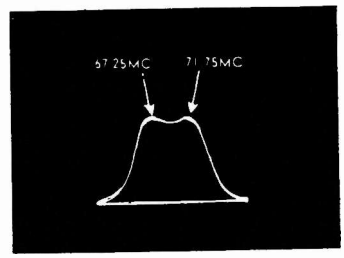

Fig. 19 Channel 4 RF Response.

5. Study Fig. 4 and adjust the converter grid capacitor (C9), the RF plate capacitor (C8) and the RF grid capacitor (C5) until a response curve similar to Fig. 19 is obtained.

6. Turn the channel selector to Channel 11 and adjust the sweep generator until a response somewhat similar to Fig.20 is obtained. Adjust L5 and L6 to obtain symmetry. If the band pass is too great or too narrow also adjust L7.

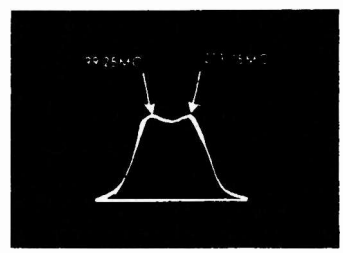

Fig. 20 Channel 11 RF Response.

7. Repeat steps 5 and 6 until the best overall symmetry is obtained. REMOVE AGC JUMPER.

MASTER OSCILLATOR ALIGNMENT

The master oscillator adjustment is to be made only if resonance cannot be obtained with the strip oscillator adjustment wrench with the fine tuning control in its center position, and after it has been determined that the channel strip itself is not at fault.

If channels 2 through 6 can be made to resonate with the bull's-eye adjustment at the rear of the turret and the high channels do not resonate, a slight readjustment of the oscillator inductance L10 (See Fig. 4) may be necessary to affect resonance on the high channels.

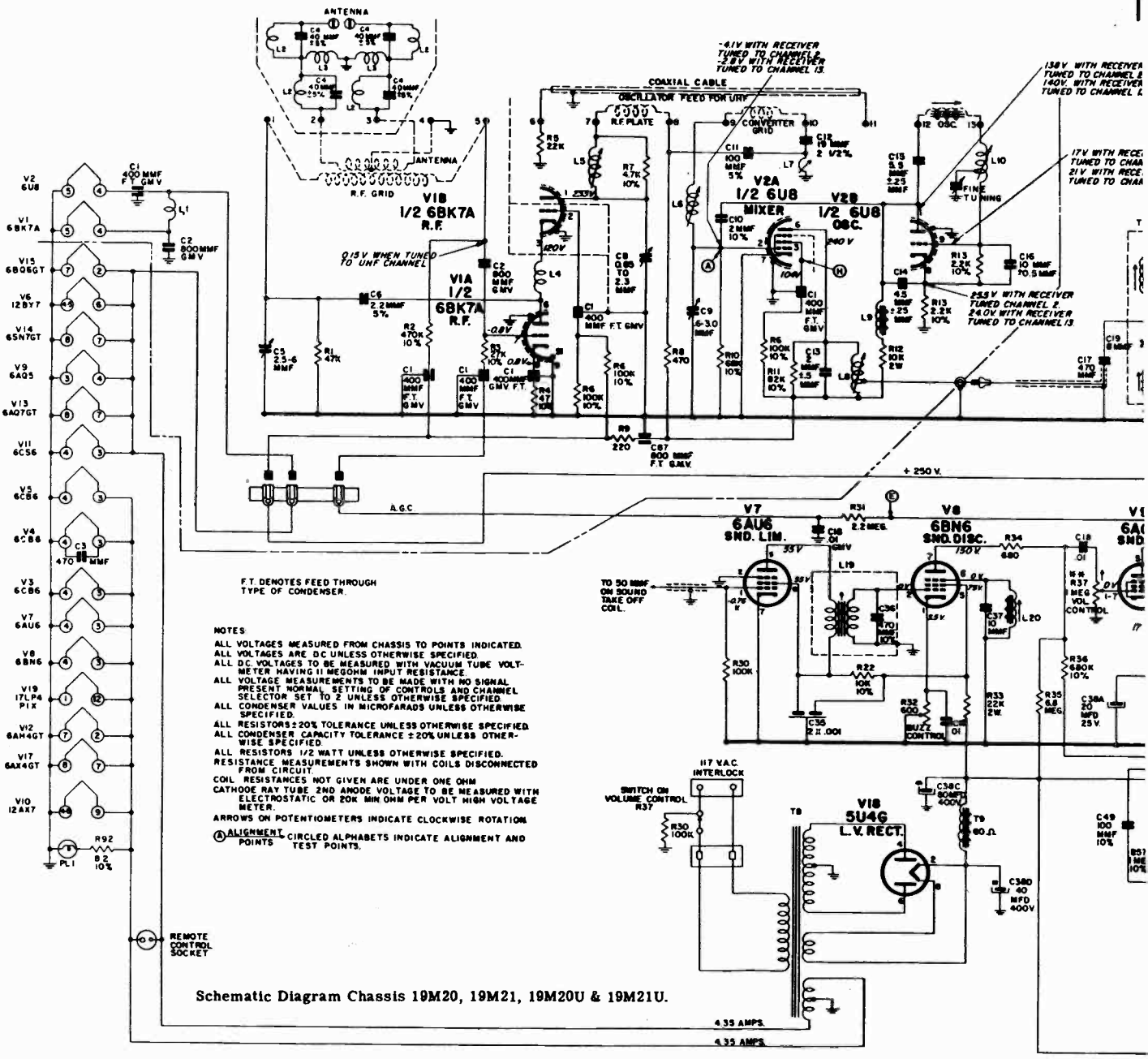

Schematic Diagram Chassis 19M20, 19M21, 19M20U & 19M21U.

CENTERING ADJUSTMENT

In the 19M series, the centering assembly is built into the yoke housing. This assembly is made up of two magnetic rings which can be rotated by means of tabs. Centering is accomplished by gradually rotating the tabs with respect to each other then rotating both tabs simultaneously until the picture is centered.

FOCUS CONTROL: In the 19M Series, a 7.5 Megohm potentiometer is provided for focusing the picture tube.

UHF-VHF CHANGEOVER SWITCH

The low loss 85-546 UHF-VHF changeover switch is part of the S-21001 UHF-VHF tuner package. The switch performs 3 functions.

1. Is used to switch the antenna between tuners.
2. Switches the oscillator B+ between tuners.
3. Actuates the UHF pilot light.

The switch is actuated by a lever which is mounted on the turret tuner shaft. When the VHF tuner is in the UHF position, the lever, if properly aligned, will actuate the changeover switch.

ZENITH Chassis 19M20, 19M20U, 19M21, and 19M21U.
Chassis 19M20Z, 19M20UZ, 19M21Z, and 19M21UZ,
are similar but have a socket for UHF tuner connection.

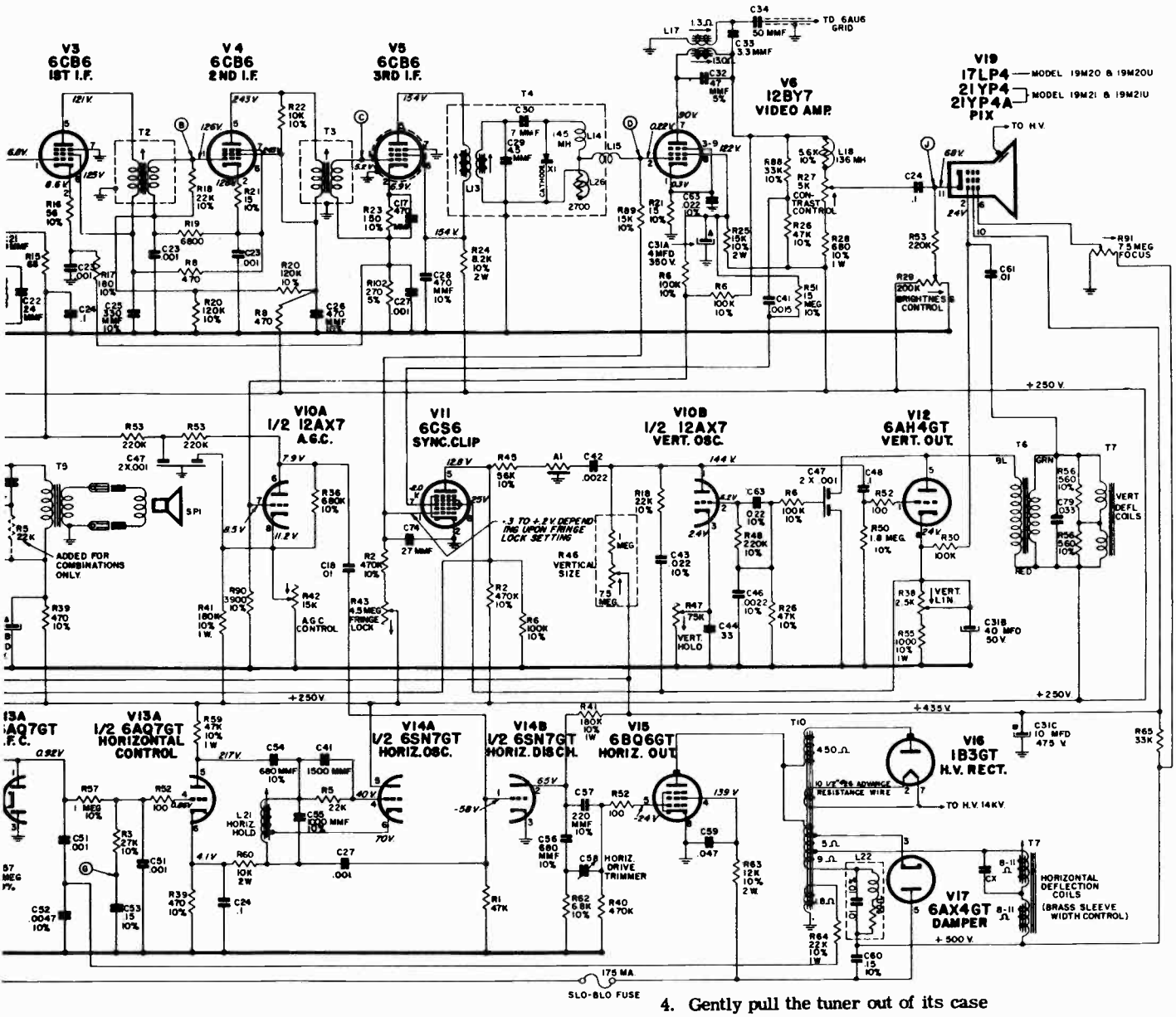

REMOVING TURRET TUNER FROM THE CHASSIS

1. Pull out the VHF power connector, UHF IF connector, VHF oscillator B+ connector, VHF IF connector and disconnect the antenna transmission line.

2. To insure proper indexing, note the channel to which the receiver is tuned so that the tuner drum can be rotated back to this channel before the unit is reassembled.

3. Loosen (do not remove) the hex head set screw in the VHF tuner drive pulley and slide pulley off the fine tuning shaft. Remove screws and hex nuts.

4. Gently pull the tuner out of its case

If, after the tuner is reinstalled, the fine tuning knob does not have normal mechanical travel (from stop to stop of the lower pulley) and can be turned to hit only one stop, the dial cord can be made to slip towards the other stop by applying sufficient pressure to the fine tuning knob.

METAL WRAPPED RESISTORS

In servicing the TV receiver, the serviceman will find several circuits in which metal wrapped resistors are used. The metal wrapping dissipates much of the resistor heat and doubles the wattage rating. In replacing a resistor care should be used to mount it as the original. If the metal mounting clamp is discarded, the resistor wattage must be doubled.

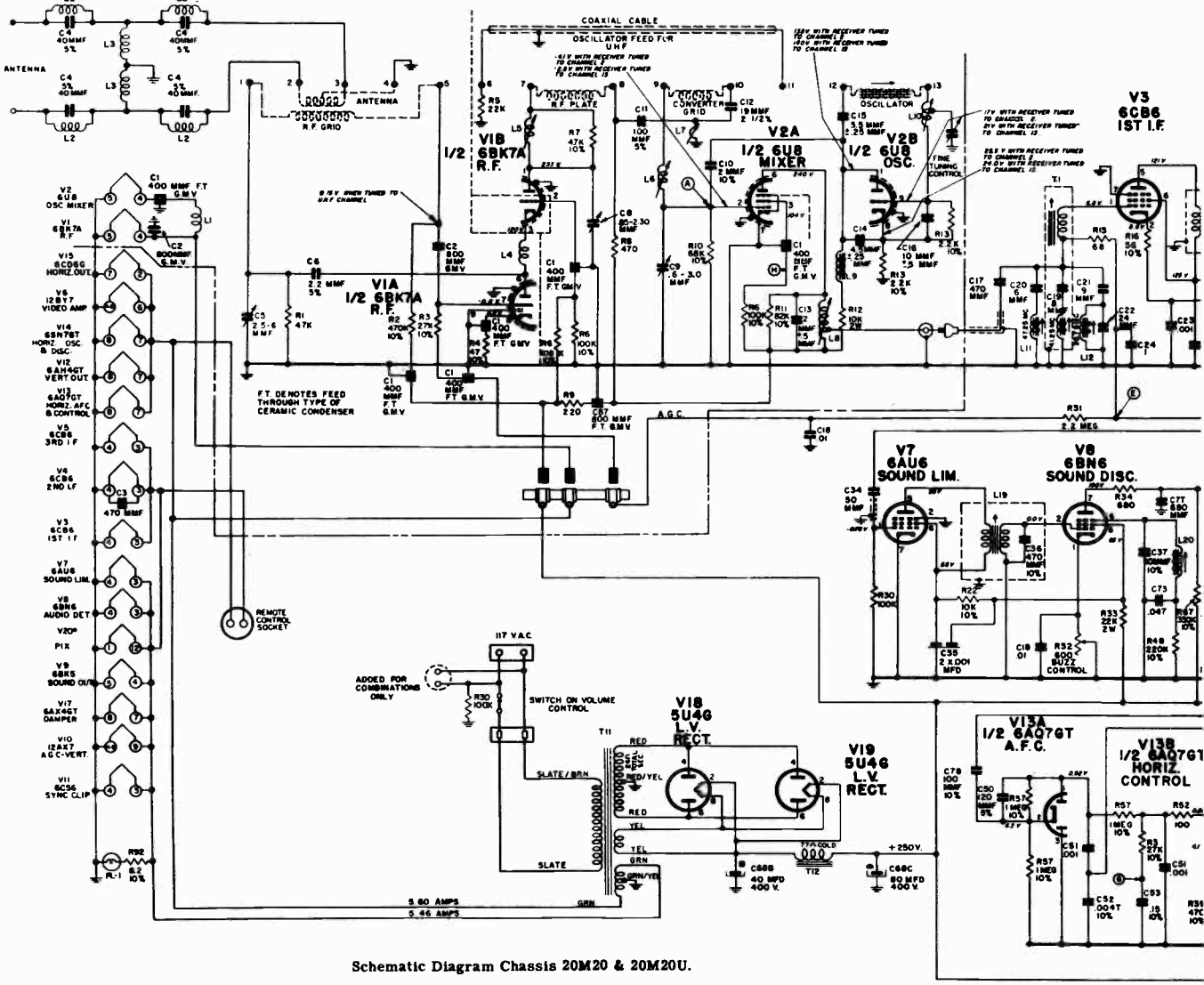

Schematic Diagram Chassis 20M20 & 20M20U.

CENTERING ADJUSTMENT

In the 20M series, PM focusing and centering is utilized. The top screwdriver adjustment on the centering assembly is used to move the picture up or down and the bottom adjustment for side to side movement. The center adjustment is for focusing.

In some 20M21 receivers, a single centering lever is used for both vertical and horizontal centering. The up-down movement of this lever moves the picture horizontally while a left-right movement moves the picture vertically. A screwdriver adjustment is provided for focusing.

AFC ADJUSTMENT

The AFC adjustment can effectively be made by setting the horizontal hold control L21 to a position where it is virtually impossible to "throw" the receiver out of horizontal sync when switching from channel to channel.

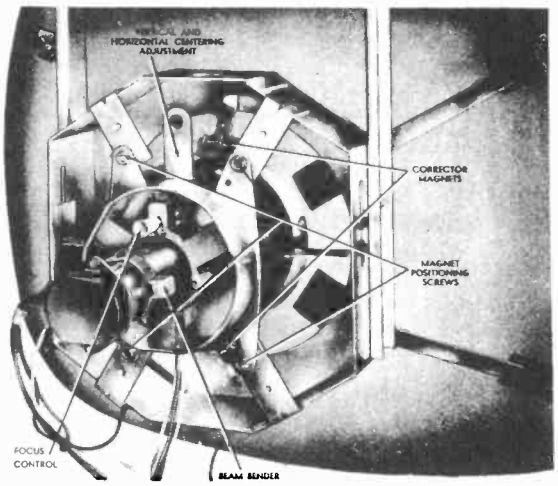

Adjustments on Neck of Picture Tube 20M21 Chassis

MOST-OFTEN-NEEDED 1955 TELEVISION SERVICING INFORMATION

ZENITH Diagram for Chassis 20M20 and 20M20U. Chassis 20M21, 20M21U, and 20M21Z are similar in most respects; some of the differences are the use of 24CP4 or 27EP4 picture tube, and 6AU5GT or 6AV5GT vertical output tube.

Note: 20M21Z uses a turret type tuner.

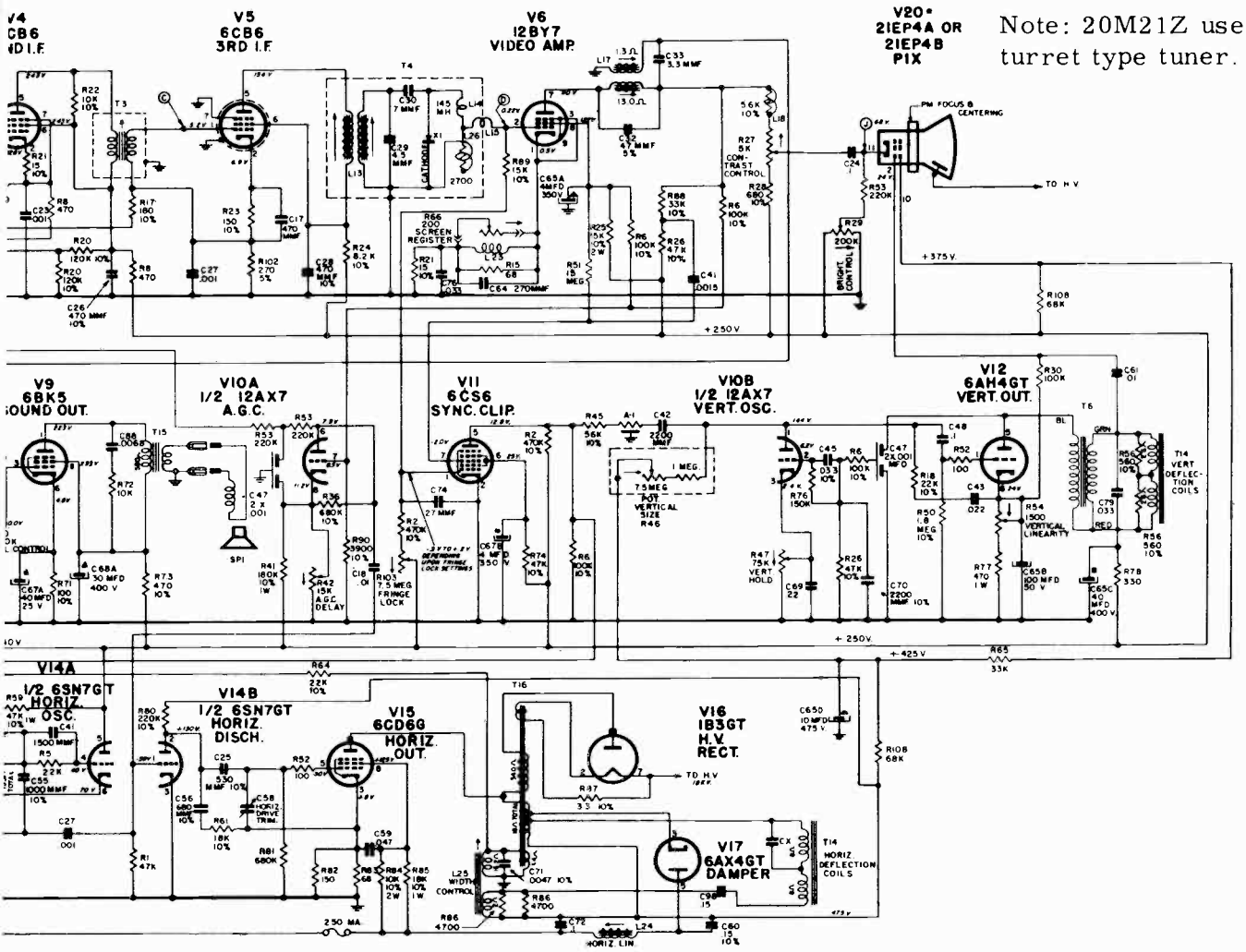

NOTES:
ALL VOLTAGES MEASURED FROM CHASSIS TO POINTS INDICATED.
ALL VOLTAGES ARE D.C. UNLESS OTHERWISE SPECIFIED.
ALL D.C. VOLTAGES TO BE MEASURED WITH VACUUM TUBE VOLTMETER HAVING 11 MEGOHM INPUT RESISTANCE.
ALL VOLTAGE MEASUREMENTS TO BE MADE WITH NO SIGNAL PRESENT. NORMAL SETTING OF CONTROLS & CHANNEL SELECTOR SET TO 2 UNLESS OTHERWISE SPECIFIED.
ALL CONDENSER VALUES IN MICROFARADS UNLESS OTHERWISE SPECIFIED.
ALL RESISTORS ±20% TOLERANCE UNLESS OTHERWISE SPECIFIED.
ALL CONDENSER CAPACITY TOLERANCE ±20% UNLESS OTHERWISE SPECIFIED.
RESISTANCE MEASUREMENTS SHOWN WITH COILS DISCONNECTED FROM CIRCUIT.
COIL RESISTANCES NOT GIVEN ARE UNDER ONE OHM.
CATHODE RAY TUBE 2ND ANODE VOLTAGE TO BE MEASURED WITH ELECTROSTATIC OR 20K MIN. OHM PER VOLT HIGH VOLTAGE METER.
ARROWS ON POTENTIOMETERS INDICATE CLOCKWISE ROTATION.
(A) ALIGNMENT POINTS → CIRCLED ALPHABETS INDICATE ALIGNMENT AND TEST POINTS.

REMOVING THE S21000 CONTINUOUS TUNER FROM THE CHASSIS

Although it may be more convenient to first take out the VHF tuner before removing the UHF tuner it is not a necessity. The UHF tuner can be removed as follows:

1. Loosen the screws and hex nuts which hold the VHF tuner in place. Loosen the VHF tuner drive pulley and slide the pulley off the drive shaft. This step is necessary so that the VHF tuner case can be moved slightly to obtain clearance for removal of the UHF tuner.

2. Remove the UHF heater and B+ connections

3. Loosen the set screw and remove the UHF tuner drive pulley.

4. Remove the UHF tuner locking screw and lift up the tuner. It may be necessary to bear slightly against the VHF tuner case to obtain sufficient clearance for removing the UHF tuner.

When the tuner is reinstalled, reverse this procedure. Do not tighten the UHF tuner locking screw until the VHF drive pulley is installed and can be moved freely. Also do not tighten the UHF tuner drive pulley until the tuner and the indicator dial are in synchronism on channels 14, 54 and 83.

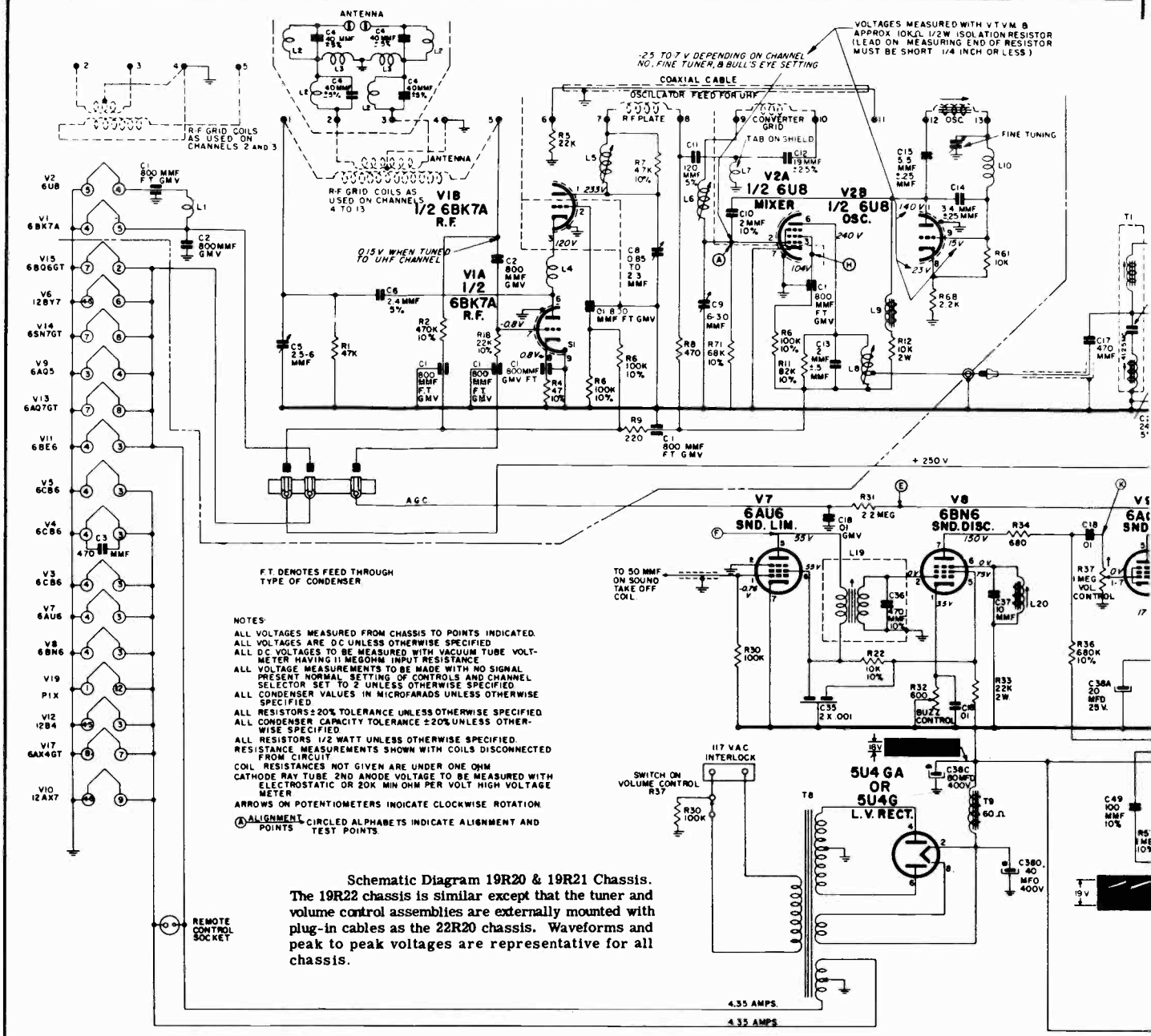

Schematic Diagram 19R20 & 19R21 Chassis. The 19R22 chassis is similar except that the tuner and volume control assemblies are externally mounted with plug-in cables as the 22R20 chassis. Waveforms and peak to peak voltages are representative for all chassis.

CENTERING ADJUSTMENT

In the 19R series, the centering assembly is built into the yoke housing. This assembly is made up of two magnetic rings which can be rotated by means of tabs. Centering is accomplished by gradually rotating the tabs with respect to each other then rotating both tabs simultaneously until the picture is centered.

In the 22R series, PM focusing and centering is utilized. The top screwdriver adjustment on the centering assembly is used to move the picture up or down and the bottom adjustment for side to side movement. The center adjustment is for focusing.

In some 22R20 and 22R21 receivers, a single centering lever is used for both vertical and horizontal centering. The up-down movement of this lever moves the picture horizontally while a left-right movement moves the picture vertically. A screwdriver adjustment is provided for focusing.

AFC ADJUSTMENT

The AFC is adjusted by setting the horizontal hold control L21 to a position where it is virtually impossible to "throw" the receiver out of horizontal sync when switching from channel to channel.

ZENITH Diagram for Chassis 19R20, 19R21, and 19R22. Chassis 22R20 and 22R21 are similar except for the horizontal output tube, an additional 5U4G, higher second anode voltage, and high fidelity sound. Knob positions also differ.

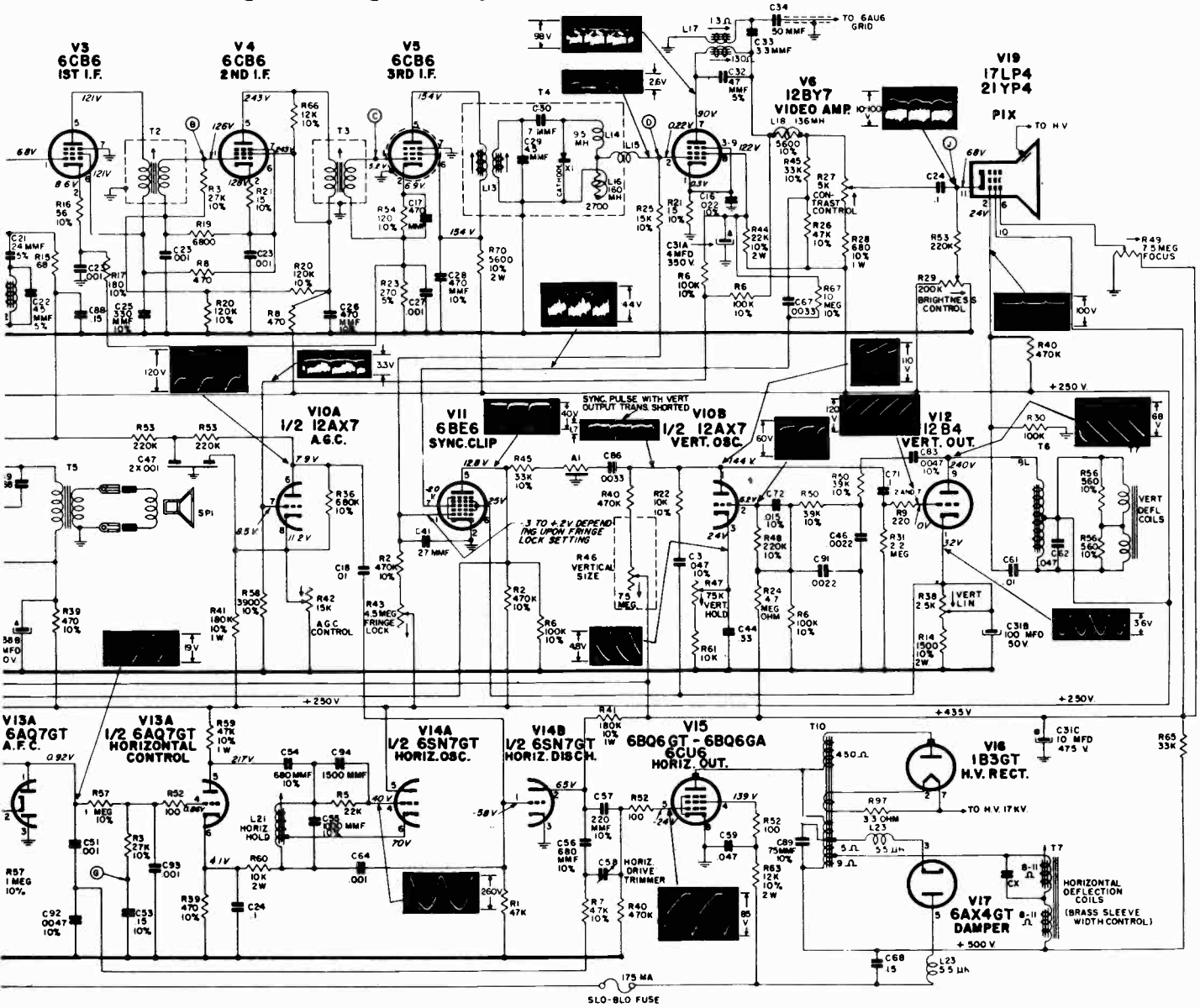

CORRECTOR MAGNET ADJUSTMENT

Two corrector magnets are used (not required in the 19R series) to obtain straight, sharply focused sweep lines across the face of the picture tube. In the 22R21 chassis, the corrector magnets are mounted top and bottom. The magnets are mounted on the deflection coil mounting brackets and can be moved in and out or up and down by bending the flexible arms which support them. Adjustment has been made at the factory and should not require re-adjustment unless accidentally bent out of position. If this occurs, proceed as follows:

1. With the vertical and horizontal size controls, reduce the size of the picture to a point where the four corners and sides of the picture are visible. (In some receivers it may not be possible to reduce the picture size sufficiently to see all the sides and in this case it may be necessary to shift the picture with the centering control to view one side at a time.)

2. Bend the corrector magnet arms until the corners become right angles and the top of the raster is parallel with the bottom and the left side is parallel with the right side. After adjustment, the picture should be restored to normal size.

NOTE: Mis-adjustment of the corrector magnets may cause pincushioning, barreling, keystoning, poor linearity, etc.

ZENITH RADIO CORPORATION

This signal path chart will help you diagnose faults that may develop in the 1955 Zenith television models.

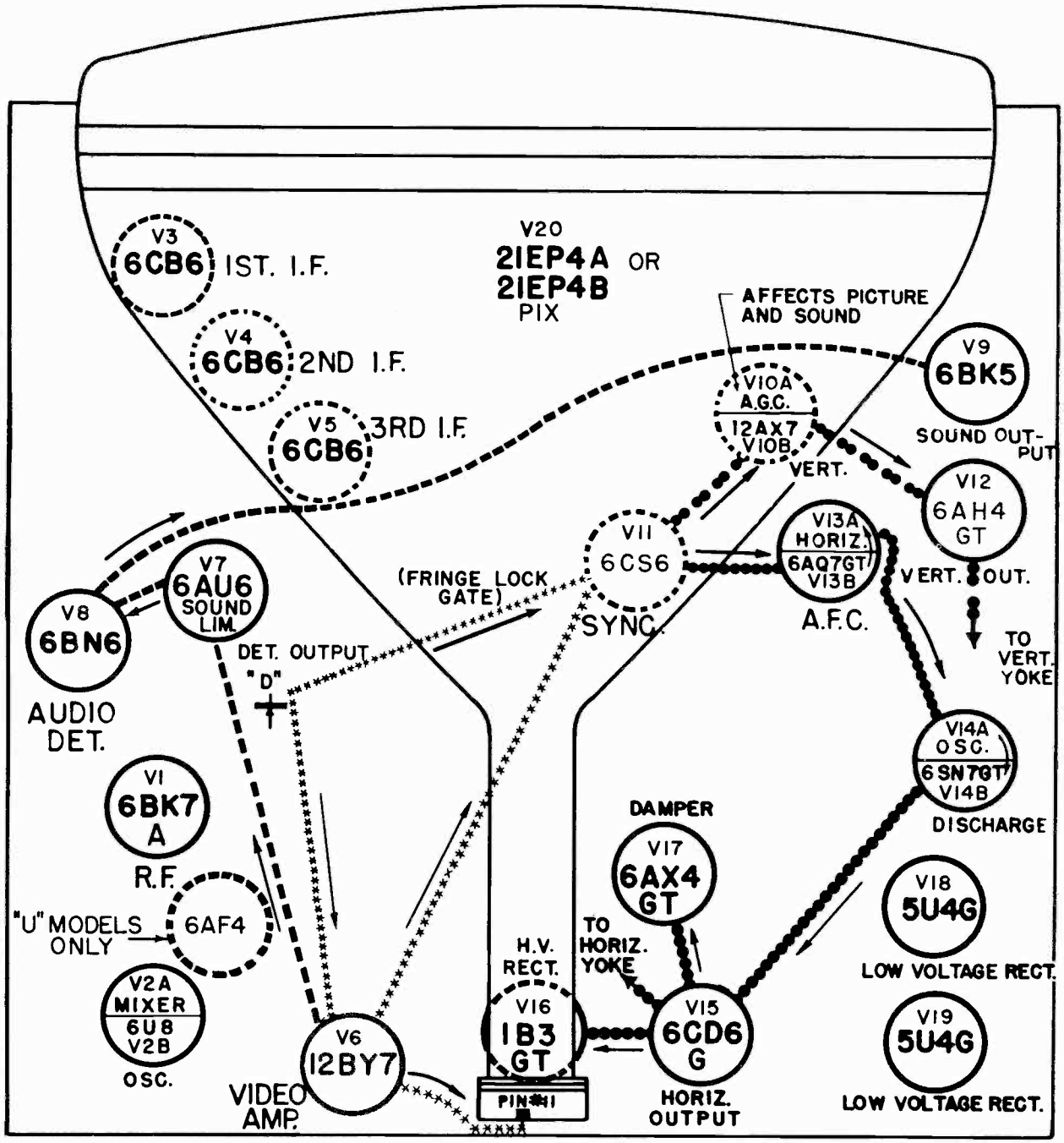

Signal Path Chart 20M20, 20M20Z, 20M20UZ & 20M20U.

Index

Under each manufacturer's name are listed that make chassis and models in numerical order, at left. The corresponding page number at right of each listing refers to the first page of each section dealing with such material.

MOST-OFTEN-NEEDED 1955 TELEVISION SERVICING INFORMATION

Another

Supreme Publications

Service Manual

Supreme Publications are Available at All Leading Parts Jobbers