ADDITIONAL

1957

VOLUME TV-13

Television

Servicing Information

THEORY
PRACTICE EXPERIENCE

Compiled by
M. N. BEITMAN

VOLUME TV-13
PRICE $3

SUPREME PUBLICATIONS

ADDITIONAL

1957

Volume TV-13

Television

Servicing Information

Compiled by

M. N. BEITMAN

SUPREME PUBLICATIONS

Supreme Publications

1760 Balsam Road, Highland Park, Illinois
(Warehouse and Branch Office in Chicago, Illinois)

RADIO DIAGRAM MANUALS

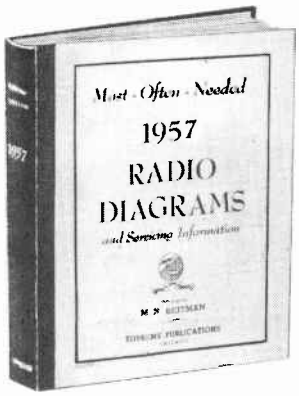

☐ **New 1957** VOLUME 17 **Price $2.50**

Repair quickly all new **1957** sets as well as older radios. This big volume contains clearly printed, large schematics, needed alignment data, replacement parts lists, voltage values, and information on stage gain, location of trimmers, and dial stringing, for all important new **1957** sets. Includes material on portables, clock radios, record changers, FM, and auto sets. A worthy companion to sixteen previous volumes used by over 143,000 shrewd radio servicemen. Large size: 8½ x 11 inches. Manual style binding. Postpaid, only **$2.50**

RADIO DIAGRAMS FOR PREVIOUS YEARS

Speed up and simplify all radio repairs. Service radios faster, better, easier, save money and time, use these **SUPREME Most-Often-Needed** diagram manuals to get ahead. At the low cost (only $2 for most volumes) you are assured of having for every job needed diagrams and other essential repair data on 4 out of 5 sets you will ever service. Clearly printed circuits, parts lists, alignment data, and helpful service hints are the facts you need. Average volume has 192 pages, large size 8½ x 11 inches. Manual style binding.

☐ **1956** Volume 16 **$2.50** ☐ **1955** Volume 15 **$2.00** ☐ **1954** Volume 14 **$2.50** ☐ **1953** Volume 13 **$2.50** ☐ **1952** Volume 12 **$2.50** ☐ **1951** Volume 11 **$2.50**

☐ **1950** Volume 10 **$2.50** ☐ **1949** Volume 9 **$2.50** ☐ **1948** Volume 8 **$2.00** ☐ **1947** Volume 7 **$2.00** ☐ **1946** Volume 6 **$2.00**

☐ **1942** Volume 5 **$2.00** ☐ **1941** Volume 4 **$2.00** ☐ **1940** Volume 3 **$2.00** ☐ **1939** Volume 2 **$2.00** ☐ **1926-1938** Volume 1 **$2.50**

☐ **INDEX for all Radio and TV Manuals** ..... 25¢

☐ RADIO MATHEMATICS

Explains arithmetic and simple algebra in connection with units, color code, meter scales, Ohm's law, alternating currents, ohmmeter testing, wattage rating, series and parallel connections, capacity, inductance, mixed circuits, vacuum tubes, curves, the decibel, etc., and has numerous examples. Only ..... **25¢**

☐ How to Modernize Radios

Cash in by improving and modernizing all out of date radio sets and cabinets. Practical job-sheets with schematics and photographs make this work easy. Size 8½ x 11 inches. Your price only..... **$1**

☐ **ARVIN DIAGRAM Manual** (Pre-War Radios) **50c**

☐ RADIO SERVICING COURSE

Here is your practical radio course of 22 easy-to-follow lessons. Review fundamentals, learn new servicing tricks. Just like a $200.00 correspondence course. Everything in radio servicing. With self-testing questions. New edition. Price only **$2.50**

SUPREME TELEVISION MANUALS

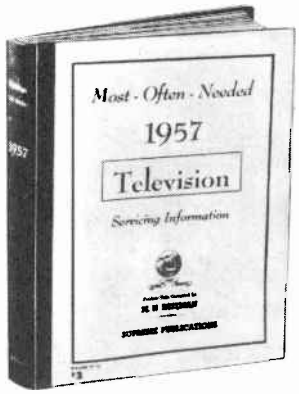

☐ **1957 TV Manual, TV-12**

This new giant volume of **1957** television factory data will give you everything you need to repair and adjust all present-day TV sets. The **television series** manuals are amazing bargains and defy competition. The **1957** volume contains circuit explanations, 192 pages of alignment facts, test patterns, response curves, waveforms, voltage charts, hints, and dozens of mammoth double-page work-bench diagrams. Large size 8½x11 inches. Sturdy covers. Book binding opens flat. Amazing value. Price postpaid, only.... **$3**

EARLIER TV MANUALS FOR 1956 TO 1948

Supreme **TV** manuals cover all needed service material on every popular TV set of every important manufacturer. Here is helpful, practical, factory-prepared data that will really make TV servicing and adjustment easy for you. *Supreme* giant TV manuals have complete circuits, alignment facts, test patterns, response curves, service hints, recommended changes, voltage charts, waveforms, and many double-page diagram blueprints. Here is your TV service material to help you do more expert work quicker; and priced at only $3. The **UHF Converters** manual at only $1.50 has everything you need on UHF. **Radio** manuals described at left.

☐ **1956 TV** Volume TV-11 **$3.00** ☐ **1955 TV** Additional, TV-10 **$3.00** ☐ **1955 TV** Early, Vol. TV-9 **$3.00** ☐ **1954 TV** Volume TV-8 **$3.00**

☐ **1953 TV** Volume TV-7 **$3.00** ☐ **1952 TV** Volume TV-6 **$3.00** ☐ **1951 TV** Volume TV 5 **$3.00** ☐ **1950 TV** Volume TV-4 **$3.00**

☐ **1949 TV** Volume TV-3 **$3.00** ☐ **1948 TV** Volume TV-2 **$3.00** ☐ **UHF Converters** Volume UHF-1, **$1.50**

☐ TELEVISION SERVICING COURSE

Let this new course teach you TV servicing. Amazing bargain, complete only $3, full price for all lessons. Giant in size, mammoth in scope, topics just like a $200.00 correspondence course. Lessons on picture faults, circuits, adjustments, short-cuts, UHF, alignment hints, antenna problems, trouble-shooting, test equipment, picture analysis. Special, only **$3**

☐ Practical Radio & Electronics Course

Here is your complete home study course of 35 lessons designed to train any beginner to be an expert in radio and electronics. Covers every topic of radio, electronics, with lessons on test equipment, FM, TV, radio, etc. Giant 8½ x 11 inches, 3-in-1 volume, includes all lessons, instructor's notes, test questions. New edition. Only..... **$3.95**

☐ **ANSWER BOOK to the above course**..... 25¢

☐ Simplified Radio Servicing by COMPARISON Method

Revolutionary different **COMPARISON** technique permits you to do expert work on all radio sets. Most repairs can be made without test equipment or with only a volt-ohmmeter. Many simple, point-to-point, cross-reference, circuit suggestions locate the faults instantly. Plan copyrighted. Covers every radio set — new and old models. This new servicing technique presented in handy manual form, size 8½ x 11 inches, 92 pages. Over 1,000 practical service hints. 26 large, trouble-shooting blueprints. Charts for circuit analysis. 114 tests using a 5c resistor. Developed by M. N. Beitman. New edition. Price only..... **$1.50**

CONTENTS

Admiral Corporation
Chassis 17C1, 17G1, 17AC1, 17AG1 . . . . . 5 to 9
Chassis 16F1 and 16AF1 (For models see first page listed) 10 and 11
Chassis 16H1 and 16AH1 (For models see first page listed) 12 and 13
Chassis 16B1, 16D1, 16E1, and 16AB1, 16AD1, 16AE1. . . 14 to 18
Chassis 17B1 and 17AB1, with HI-FI Amplifier 4R2 . . . . 19 to 22
Chassis 17F1 and 17AF1 (For models see first page listed) 23 to 26

Crosley Corp.
Chassis 488, Models AC-11B, -M, AH-11B, AT-11B, -M . . 27 to 30
Chassis 489, 490, 493, 494 (models listed on page 31) . . . 31 to 38

Allen B. Du Mont Laboratories, Inc.
RA-380 and RA-381 Chassis . . . . . 39 to 42

Emerson Radio and Phonograph Corp.
Chassis 120322V, 120323T, 120329V, 120330T, used in
Models 1214 through 1219, 1224, 1225, 1226, 1227 . . 43 to 46
Chassis 120331H, Model 1232; Chassis 120332R, Model 1233 47 to 50
Chassis 120341H, 120342R, 120347H, 120348R, 120358H,
120359R, (see page 51 for a complete list of models) . 51 to 56
Chassis 120343E, 120344G, 120345E, -V, 120346V,
(For complete list of models see page 57) . . . . . 57 to 60
Chassis 120351E, 120352G, (see page 61 for list of models) 61 to 64
Chassis 120353E, 120354G, (see page 65 for list of models) . . . 65
Chassis 120360E, 120361G, Models 1280, 1281, (Radio 120364B) 66

General Electric Co.
"M3" Line, Models 17P1329, 17P1330, 17P1331 . . . . . 67 to 74
"Q2" Line, Models 14P1209, 14P1210, 14P1211, 14P1212 . 75 to 78
"T" Line, Models 9T001, 9T002 (also with suffix UHF) . . 79 to 84
"U2" Line, Models 21C1540 to 21C1542, 21C1550, 21C1551 . 85 to 92

Hoffman Radio Corp.
MARK 5, Chassis 420, 420U, Models M3181, SP3181, B3191,
and Chassis 419, -U, Models B3081, M3081, P3081, W-, 93 to 96

Hotpoint Co.
"MM" Line, Models 17S301 and 17S302 . . . . . 97 to 104

Motorola, Inc.
Chassis TS-422, Models in 17T27 and 17T28 Series . . . 105 to 114
Chassis TS-539, (see page 115 for a complete list of models) 115-134

(Continued on page 4)

Table of Contents, Continued

Muntz TV, Inc.
Models of the 724 and 727 Series (see page 135 for list) . . 135 to 138

Olympic Radio & Television, Inc.
DA, DB, DF, DAU, DBU, DFU Chassis (list of models p.139) 139-142

Philco Corp.
Chassis 7H20, 7H20-U, 7H22 . . . . . 143 to 148

R.C.A. Victor
Models 17S7090, -U, 17S7092, -U, 17S7093, -U, 17S7099, -U,
using Chassis 5377 and 5378 . . . . . 149 to 156

Sylvania Electric Products, Inc.
Chassis 1-525-1, -2, Models 14P101, 14P201 Series . . . 157 to 160

Westinghouse Electric Corp.
Chassis V-2311, V-2321, V-2370, V-2380 (models listed 161) 161-167
Chassis V-2346, V-2347, V-2356, V-2357 (models p. 168) 168 to 174

Zenith Radio Corp.
Chassis 16Z25, Models Z1510L, Z1511B, Z1512J . . . . 175 to 178
Chassis 15Z30, 15Z31, 17Z30, 17Z31, 17Z32, 17Z33,
17Z34Q, 19Z32, 22Z30, (list of models on page 179) 179 to 190

INDEX (by make and model or chassis number) . . . . . 191 and 192

FOREWORD

This new "Additional 1957 Television Servicing Information" manual is the thirteenth volume of the Supreme Publications TV series. As in previous volumes, we have tried to include all essential service facts on all present-day popular sets. Factory prepared and checked material was used in every case where it was available. This is the service material you need to make TV servicing more profitable work.

Our sincere thanks and appreciation is extended to all manufacturers through whose cooperation it was possible to present technical information on the sets of their make.

M. N. Beitman

July 1957
Highland Park, Illinois

Admiral

17C1 and 17G1

Chassis 17AC1 and 17AG1 differ from the above only in that a UHF/VHF tuner is used.

Chassis 17C1, 17G1, are used in Models C21F42, C21F43, T21F32, T21F33
Chassis 17AC1, 17AG1, used in Models CA21F42, CA21F43, TA21F32, TA21F33

(Service material on pages 5 through 9)

Parts List

Only special parts are listed below.

COILS AND TRANSFORMERS

Sym.	Description	Part No.
L302	1st IF Grid Input Coil	72C 132-31
L303	IF Input Trap Coil (41.25 MC)	73B 37-1
L304	Video Detector Peaking Coil	73B 5-20
L305	Video Detector Coil (with white mark)	73B 24-7
L306	Video Detector Choke	73B 31-1
L307	Video (Series) Peaking Coil (includes R322)	73B 5-23
L308	Video (Shunt) Peaking Coil (includes R323)	73B 5-36
L310	Heater Choke	73B 27-2
L401	Horizontal Lock Coil	94C 17-4
L501	Power Supply Filter Choke	74B 18-25
T101	Antenna Transformer Assembly	AB359
T201	Audio Output Transformer	79B 78-4
T301	1st IF Transformer (with yellow mark)	72C 132-23
T302	2nd IF Transformer (with yellow mark)	72C 132-23
T303	3rd IF Transformer (Includes CR301 and C322)	72B 191-1
T304	Sound Take-off Transformer, 4.5 MC (includes C314, C315, C316)	72B 185-2
T401	Vertical Output Transformer	79B 43-14
T402	Deflection Yoke (includes R431, R432 and R433) less cap and centering device	94D 147-3
T403	Horiz. Output Transformer	79D 77-3
T501	Power Transformer	80C 35-12

RESISTORS

Sym.	Description	Part No.
R208	1 megohm, **Volume** control, tapped (includes S501 Push-Button Off-On Switch)	75B 38-2
R210	2 megohms, **Tone** control	75D 13-95
R319A	1,000 ohms, **Contrast** control	75B 17-22
R319B	100,000 ohms, **Brightness** control	75B 17-22
R322	4,700 ohms, ½ watt	Part of L307
R323	10,000 ohms, ½ watt	Part of L308
R324	5,600 ohms, 4 watts, 10%, glass type	61B 24-443
R407	100,000 ohms, **Super Range Finder** control	75D 20-101
R419	200,000 ohms, **Vertical Hold** control	75D 13-92
R424	1.5 megohms, **Height** control	75D 20-105
R426	500 ohms, **Vertical Linearity** control	75D 20-103
R430	470 ohms, 3 watts, 10%, glass type	61B 24-317
R432	3.8 ohms, (measured cold) Thermistor (mounted on on T402)	61A 27
R457	10,000 ohms, **HORIZ. DRIVE** control	75D 20-106
R461	10,000 ohms, 3 watts, 10%, glass type	61B 24-349
R465	1.2 ohms, ½ watt, 10%, (wire wound)	60B 28-64
R502	3,000 ohms, 7 watts	61B 20-15

MISCELLANEOUS CHASSIS PARTS

Sym.	Description	Part No.
CR301	Video Detector	1N87
CR401	Dual Selenium Diode	93B 5-4
M201	Speaker	
	4" PM, used on 17C1 chassis	78B 136-4
	8" PM, used on 17G1 chassis	78D 135-4
M202	Speaker	
	6" PM, used on 17C1 chassis	78C 134-4
	8" PM, used on 17G1 chassis	78D 135-5
M501	Line Cord and Interlock Socket	89B 62-4
M503	½ ampere, Slow-Blow Fuse, type "N"	84A 13-36
S501	Push Button, Off-On Switch	Part of R208
	Centering Device, Picture (mounted to deflection yoke cap)	94B 148-1
	Core, Powdered Iron	
	for L203	71D 1-49
	for L302, T301, T302, T304	71D 1-41
	for T303	71D 1-50
	Spring Clip, Cabinet Back Retaining	18A 159
	Terminal, Antenna (snap-in type)	9A 29

COILS AND TRANSFORMERS

Sym.	Description	Part No.
L201	Sound IF Coupling Coil, (4.5 MC)	72B 186-1
L203	Sound Detector (Quadrature) Coil	72C 132-18
L301	IF Input Trap Coil (47.25 MC)	73B 37-1

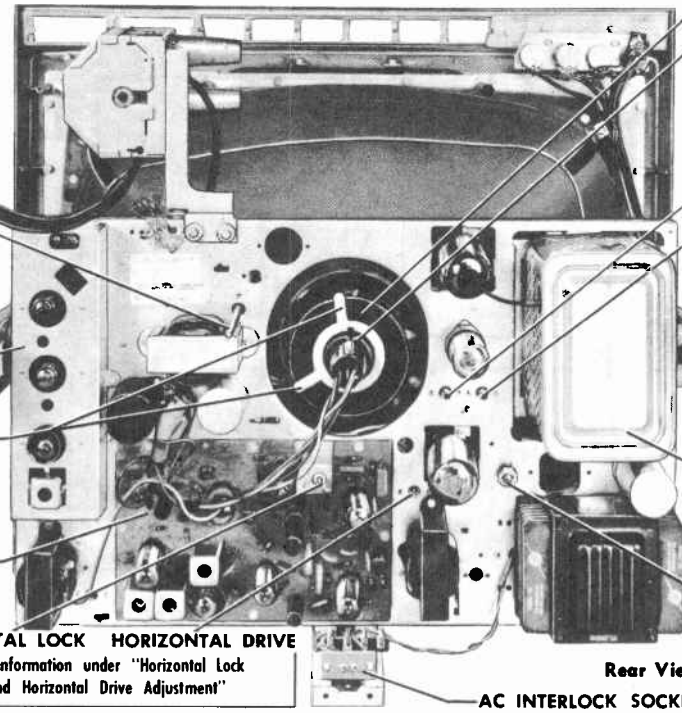

Rear View of Chassis Showing Adjustments.

Admiral Corporation Schematic for 17C1 and 17G1 Television Chassis Stamped Run 10

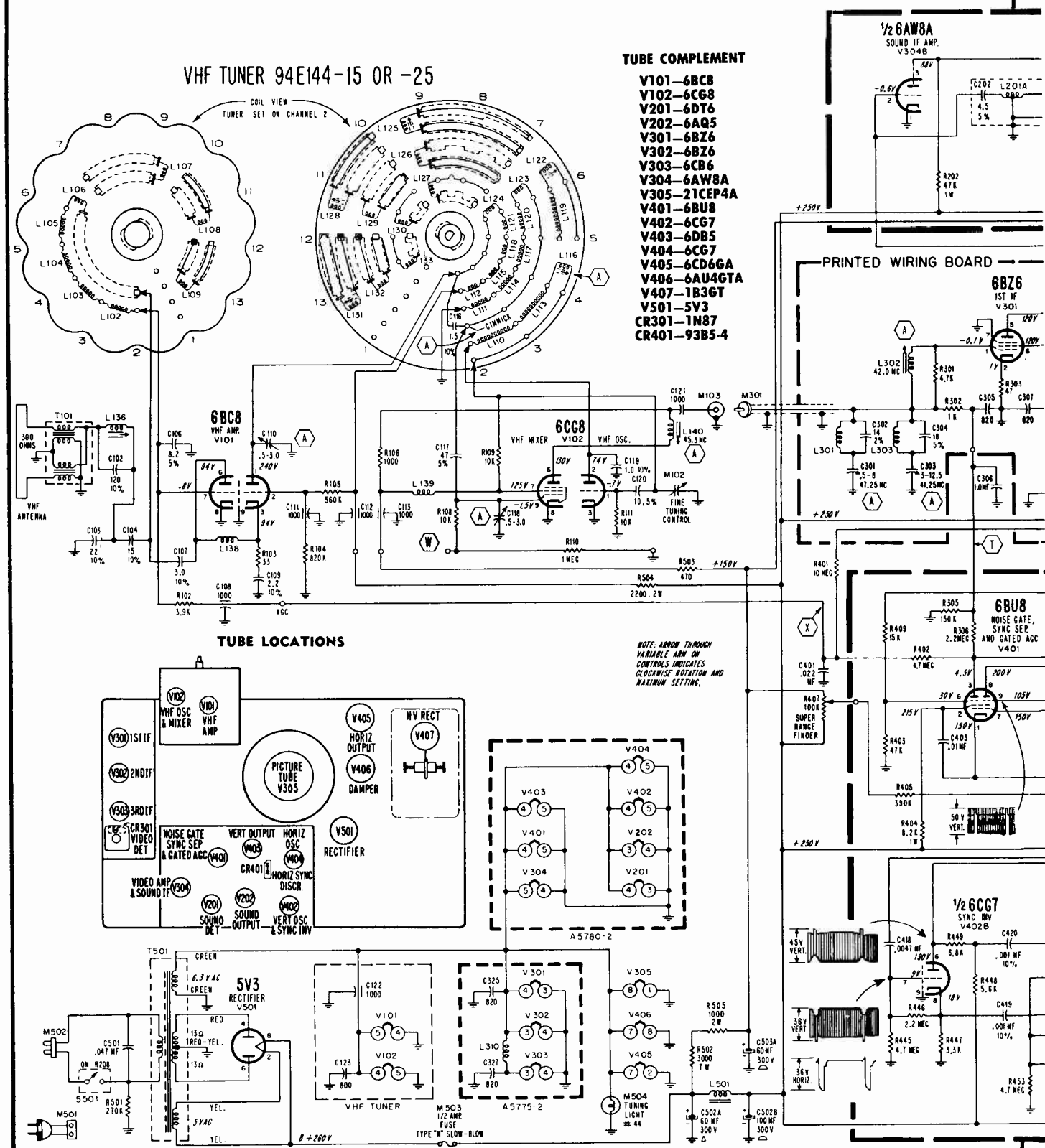

Conditions for measuring voltages on page 15, for onserving waveforms on page 8.

VOLUME TV-13, ADDITIONAL 1957 TELEVISION SERVICING INFORMATION

ADMIRAL Chassis 17C1 and 17G1 Schematic Diagram (17AC1, 17AG1 use UHF tuner)

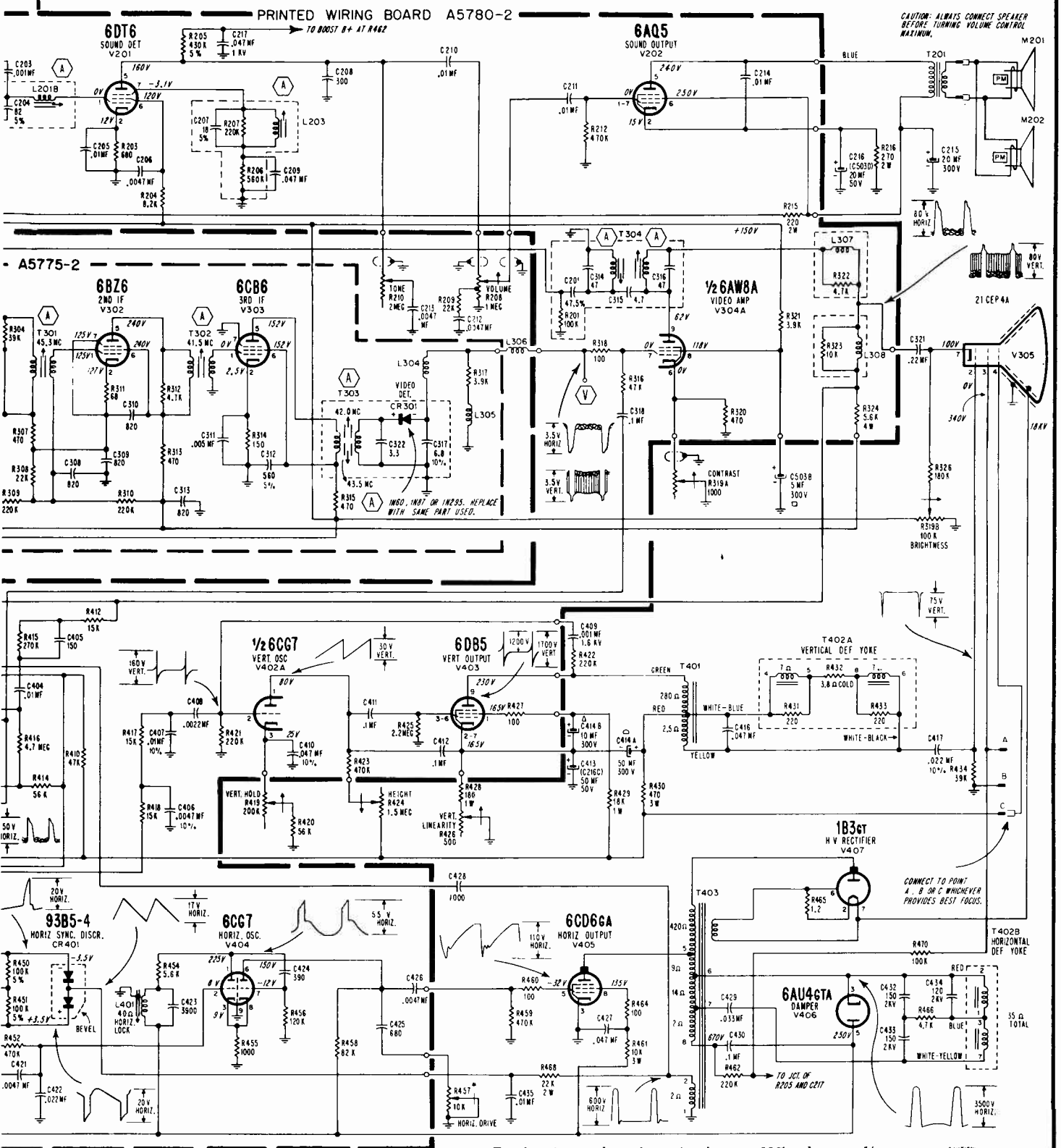

SCHEMATIC NOTES

Numbers and letters inside hexagons indicate alignment points.

Fixed resistor values shown in ohms ± 10% tolerance, ½ watt; capacitor values shown in micromicrofarads ± 20% unless otherwise specified.

NOTE: K = x 1000, MEG = x 1,000,000, MF = microfarad.

ADJUST CHANNEL SLUGS

IMPORTANT: Always make adjustment on lowest channel first, then work up, in order of channel number to the highest channel. (For example, if channels 2, 9, 7 and 5 are received, adjust in this order: 2, 5, 7, 9.)

See illustration at the right for location of channel slugs.

a. Turn the set on and allow 15 minutes to warm up.

b. Set **Channel Selector** for lowest channel to be adjusted. Set other controls for normal picture and sound.

c. Set **Fine Tuning** control at center of its range by rotating it approximately two turns in either direction and then one-quarter turn in the opposite direction.

d. For table models, remove **Channel Selector** and **Fine Tuning** knobs. For console models, remove escutcheon plate above channel knob after removing mounting screw at center of plate. Note: Later sets may use snap-in plate without mounting screw.

e. Using a 1/8" blade, flexible, non-metallic tool (Admiral Part No. 98A30-19) carefully adjust the channel slug for best picture. (Note that sound is not loudest at this point.) Repeat procedure for remaining stations, adjusting them in order of their channel number (from lowest channel to highest channel).

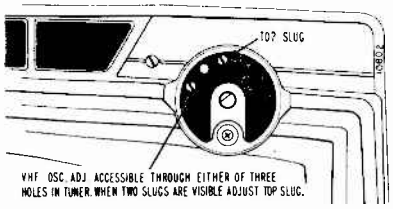

Front View of Table Model. Tuning Knobs Removed.

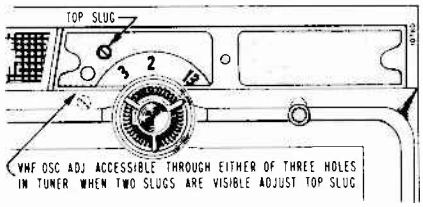

Front View of Console Model. Escutcheon plate removed.

CONDITIONS FOR OBSERVING WAVEFORMS

Warning: Pulsed high voltages are present at the caps of V405 and V407, and at pin 3 of V406. **Do not** attempt to observe waveforms at these points unless suitable test equipment is used.

- Set all controls for normal picture. Set **Super Range Finder** control fully counterclockwise. After the receiver is set for a normal picture, turn the **Contrast** control fully clockwise.
- Oscilloscope sweep is set at 30 cycles for vertical waveforms and at 7,875 cycles for horizontal waveforms, to permit 2 complete cycles to be observed.
- Peak-to-Peak voltages will vary from those shown on the schematic depending on the input signal strength, test equipment employed and chassis parts tolerance.
- Waveforms were taken with a comparatively strong transmitted signal input to the television chassis.

PRINTED WIRING VIEWS

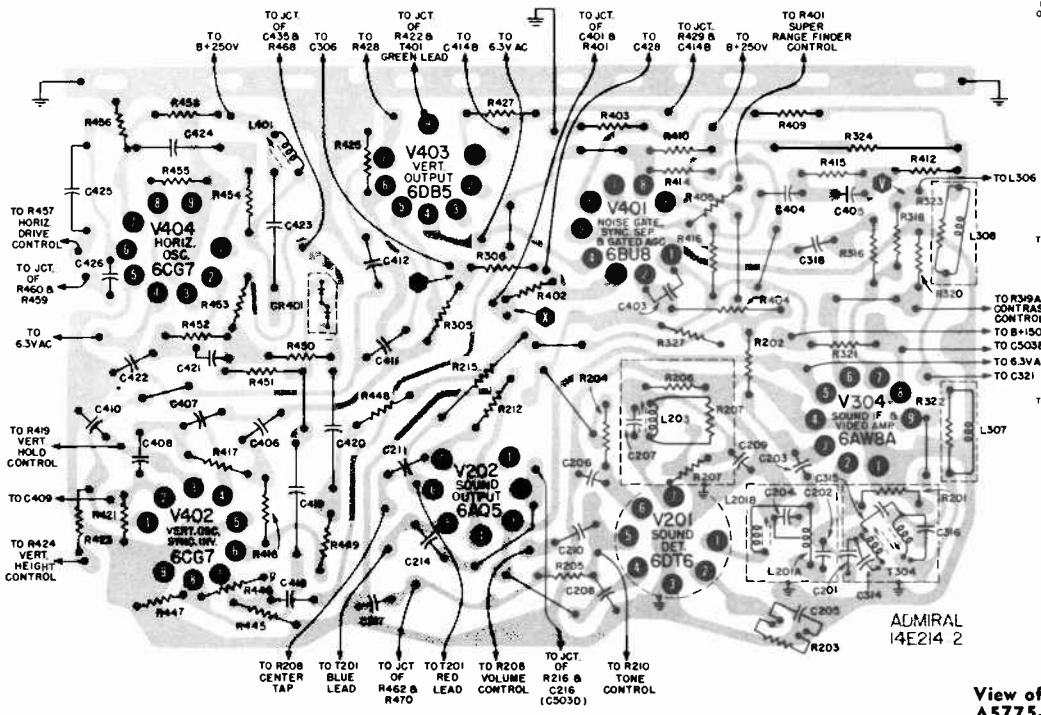

View of PRINTED WIRING SIDE of Main Board A5780-2. Gray area represents printed wiring; black symbols and lines represent components and connections on opposite side.

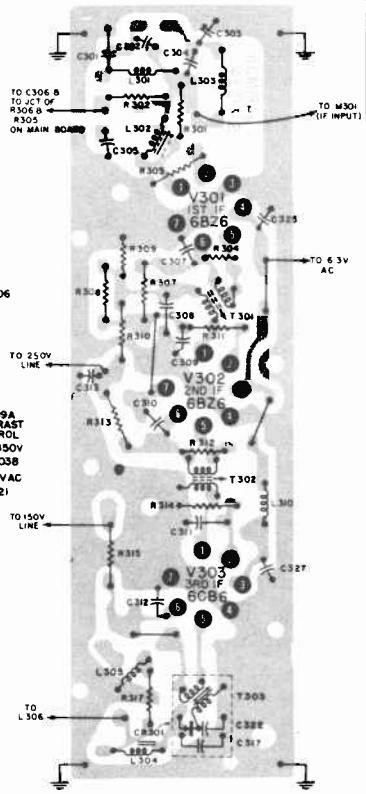

View of PRINTED WIRING SIDE of IF Board A5775-2. Gray area represents printed wiring; black symbols and lines represent components and connections on opposite side.

ADMIRAL Chassis 17C1, 17G1, 17AC1, 17AG1 (Continued)

CHECK SUPER RANGE FINDER

The **Super Range Finder** control is used to improve TV reception in fringe areas and in areas where there is interference. **This control should be set fully counterclockwise (to the left), if satisfactory pictures can be obtained by using the main operating controls.**

Where the TV signal strength is weak, the picture can often be improved by turning the Range Finder part way to the right.

White flashes across the picture, or "snow" in the picture, can sometimes be minimized by careful adjustment of the Range Finder. **CAUTION: If the Range Finder is turned too far to the right for a normal signal, the picture may have excessive contrast or may disappear completely.**

If the signal strength changes, it may be desirable to change the setting of the Range Finder, however, it is generally possible to set it at a compromise position which gives reasonable reception for different signal strengths.

Important: Keep the Super Range Finder setting as far to the left as possible consistent with satisfactory pictures.

HORIZONTAL LOCK AND DRIVE ADJUSTMENT

A receiver which requires Horizontal Lock or Horizontal Drive adjustment can be corrected only by following in exact detail the procedure given here.

Note: If Horizontal Drive adjustment is not properly made, it may be difficult to obtain sufficient picture width and brightness. Also note that there is some interaction between these controls; **Horizontal Lock** adjustment having lesser effect. Make adjustment as follows:

1. Allow receiver to warm up for a few minutes. Tune in a station, set the **Brightness** and **Contrast** controls for normal picture. Important: Before proceeding, be sure that the **Super Range Finder** control (AGC) is adjusted according to instructions given in this manual.
2. Turn **Horizontal Drive** control fully clockwise. At this point, picture compression and/or foldover will appear near the center of the picture.
3. Very slowly turn the Horizontal Drive adjustment counterclockwise, just to the point at which picture foldover and/or compression disappears. Note that maximum width and brightness is also produced at this setting. Caution: Turning the **Horizontal Drive** control too far counterclockwise will shorten life of the horizontal output tube.
4. Reduce Contrast to minimum. If picture bends or loses horizontal sync, adjust the Horizontal Lock so that picture remains in sync and bending of vertical lines does not appear at top of picture. If Horizontal Lock adjustment was required, repeat steps 2 through 4.

CHASSIS REMOVAL

The chassis, picture tube and front escutcheon are removable as a unit. Remove chassis as follows:

1. Remove cabinet back. Disconnect antenna leads and speaker.
2. At the rear of the cabinet, remove the screws which mount rear of chassis support channels to sides and bottom of cabinet.
3. Remove chassis, picture tube and front escutcheon as a unit through the front of the cabinet. For removing the chassis from front escutcheon, see procedure on Picture Tube Replacement.
4. To reinstall chassis, insert chassis through front of cabinet. Use extreme care to see that metal locating pins (at rear of escutcheon) fit into holes in cabinet.

PICTURE TUBE HANDLING PRECAUTION

WARNING: Never handle picture tube by its neck or exert pressure on neck or base.

Due to the high vacuum and large surface area of picture tubes, extreme care must be exercised when handling these tubes. Shatterproof goggles, heavy gloves and a protective apron should be worn while handling or installing a picture tube. The picture tube must not be scratched, bumped or subjected to excessive pressure, as fracture of the glass may result in an explosion of considerable violence, which may cause injury or property damage.

PICTURE TUBE REPLACEMENT

The picture tube of this receiver is mounted directly to the front escutcheon of the receiver as shown in the figure below. To replace picture tube, proceed as follows:

1. Remove chassis, picture tube and front escutcheon as a unit as instructed under Chassis Removal.
2. Remove knobs from front of set.
3. Place chassis on table with front escutcheon down.
4. Remove picture tube socket and deflection yoke from picture tube. Disconnect pilot light bracket and 2nd anode connector.
5. Disconnect bracket supporting front panel controls by removing bracket mounting screws.
6. Remove screws which mount front of chassis support channels to bosses at sides and bottom of escutcheon.
7. Carefully lift chassis up and away from picture tube.
8. To remove picture tube from escutcheon, loosen retaining screw on tube support wire. Remove screws mounting tube support straps.
9. Replace tube and reassemble chassis to escutcheon following the above procedure in reverse.

Important: See note on schematic for different focus connections.

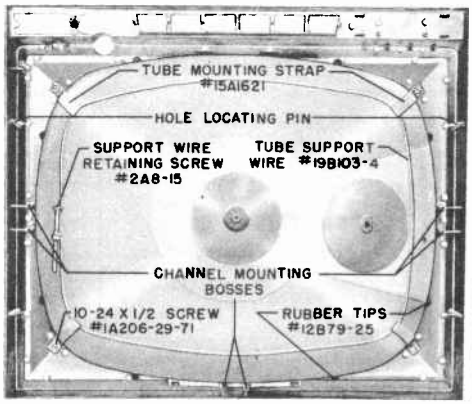

Rear View of Escutcheon with Picture Tube Mounted, Chassis Removed.

Admiral Corporation

Chassis 16F1 used in Models P17D21, P17D22, P17D23, P17D24, and Chassis 16AF1, used in Models PA17D21, PA17D22, PA17D23, PA17D24.

Schematic diagram on page 11 is exact for 16F1. Chassis 16AF1 is identical except that it uses a UHF/VHF tuner.

HORIZONTAL LOCK AND HORIZONTAL DRIVE ADJUSTMENT

A receiver which requires Horizontal Lock or Horizontal Drive adjustment can be corrected only by following in exact detail the procedure given here.

Note: If Horizontal Drive adjustment is not properly made, it may be difficult to obtain sufficient picture width and brightness. Also note, that there is some interaction between these controls; Horizontal Lock having lesser effect. Adjust as follows:

1. Allow receiver to warm up for a few minutes. Tune in a station, set the Brightness and Contrast controls for normal picture. Important: Before proceeding, be sure that the Super Range Finder control (AGC) is adjusted according to instructions given in this manual.
2. Turn Horizontal Drive control fully clockwise. Note at this point, picture compression and/or foldover will appear near the center of the picture. Very slowly turn the Horizontal Drive adjustment counterclockwise, just to the point at which picture foldover and/or compression disappears. At this point, maximum width and brightness is also produced. Caution: Turning the Horizontal Drive control too far counterclockwise will shorten life of the horizontal output tube.
3. Reduce Contrast to minimum. If picture loses horizontal sync, adjust Horizontal Lock so that picture remains in sync and bending of vertical lines does not appear at top of picture. If Horizontal Lock requires adjustment, repeat steps 2 and 3.

TUBE LOCATIONS

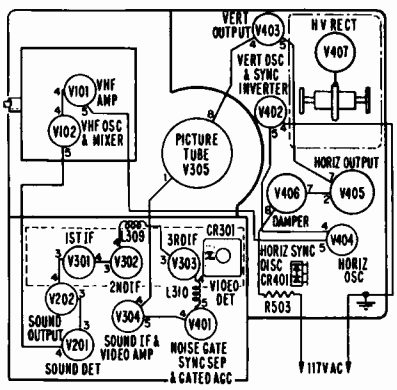

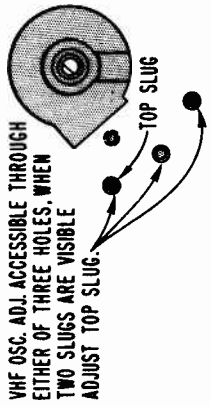

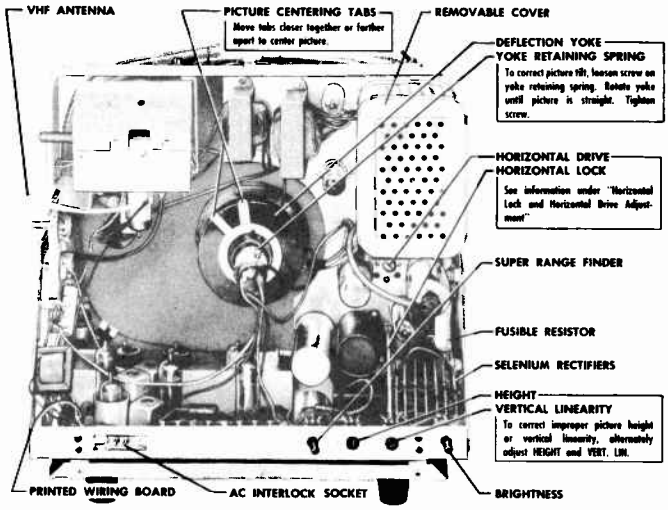

Rear View of Chassis Showing Adjustment Locations.

PARTS LIST

Only special parts are listed below.

RESISTORS

Sym.	Description	Part No.
R208	1 megohm, Volume control (R208 includes switch S501)	75D 1-93
R324	25,000 ohms, Contrast control	75D 20-98
R325	100,000 ohms, Brightness control	75D 20-101
R407	100,000 ohms, Range Finder control	75D 20-101
R419	200,000 ohms, Vertical Hold control	75D 20-97
R424	1.5 megohms, Height control	75D 20-104
R429	500 ohms, Vert. Lin. control	75D 20-100
R432	3.8 ohms (measured cold), thermistor	61A 27
R457	10,000 ohms, Horiz. Drive control	75D 20-106
R501	5 ohms, 5 watts, fusible	61A 28
R503	30 ohms, 10 watts, tapped candohm	61B 5-13

CAPACITORS

Sym.	Description	Part No.
C202	4.5 mmf, 450 volts, 5%, cer.	65B 27-045
C204	82 mmf, 500 volts, 5%, ceramic, NPO temp. coeff.	65D 10-98
C207	18 mmf, 500 volts, 5%, ceramic, N220 temp. coeff.	65D 10-140
C209	.047 mf, 200 volts, upright paper	64B 16-55
C215	40 mf, 200 volts, electrolytic	67A 25-2
C216A	60 mf, 200 volts } electrolytic	67D 15-307
C216B	5 mf, 200 volts } electrolytic	67D 15-307
C216C	20 mf, 200 volts } electrolytic	67D 15-307
C216D	50 mf, 50 volts } electrolytic	67D 15-307
C301	.5 to 8 mmf, ceramic trimmer	66A 38-8
C302	14 mmf, 450 volts, ceramic, NPO temp. coeff.	65D 6-40
C303	3 to 12.5 mmf, cer. trimmer	66A 38-7
C304	18 mmf, 500 volts, 5%, ceramic, N220 temp. coeff.	65D 10-140
C312	560 mmf, 500 volts, 5%, cer.	65D 6-131
C318	5 mf, 200 volts, electrolytic	See C216B
C320	15 mmf, 450 volts, 10%, cer.	65B 28-150
C321	.1 mf, 200 volts, upright paper	64B 16-53
C409	.001 mf, 1.6 KV, 10% (mylar dielec.)	64B 2-32
C413	50 mf, 50 volts, electrolytic	See C216D
C414A	10 mf, 300 volts } electrolytic	67D 15-204
C414B	50 mf, 300 volts } electrolytic	67D 15-204
C419	.001 mf, 400 volts, 10% (mylar dielec.)	64C 24-45
C420	.001 mf, 400 volts, 10% (mylar dielec.)	64C 24-45
C431	.001 mf, 1 KV, 10%, cer. disc	65D 10-147
C432	150 mmf, 2 KV, 10%, cer. disc, N1500 temp. coeff.	65D 10-149
C433	150 mmf, 2 KV, 10%, cer. disc, N1500 temp. coeff.	65D 10-149
C434	120 mmf, 2 KV, 10%, cer. disc, N1500 temp. coeff.	65D 10-148
C503	150 mf, 150 volts, electrolytic	67D 15-203
C504A	100 mf, 300 volts } electrolytic	67D 15-306
C504B	100 mf, 300 volts } electrolytic	67D 15-306

COILS AND TRANSFORMERS

Sym.	Description	Part No.
L201	Phase Shift and Sound IF Coil	72B 186-1
L203	Quadrature Coil	72C 132-18
L301	47.25 MC Trap Coil	73B 37-1
L302	IF Input Coil	72C 132-31
L303	41.25 MC Trap Coil	73B 37-1
L304	RF Choke Coil (orange dot)	73B 31-4
L305	Video Peaking Coil	73B 5-34
L306	RF Choke Coil (yellow dot)	73B 31-3
L307	Video Peaking Coil	73B 5-23
L308	Video Peaking Coil	73B 5-36
L401	Horizontal Lock Coil	94C 17-7
L501	RF Choke Coil (brown dot)	73B 31-1
L502	Filter Choke (11 henry)	74B 18-24
T201	Audio Output Transformer	79D 33-15
T301	1st IF Transformer	72C 132-23
T302	2nd IF Transformer	72C 132-23
T303	3rd IF Transformer	72B 19-2
T304	Sound Take-off Transformer	72C 185 2
T401	Vertical Output Transformer	79B 43-13
T402	Deflection Yoke (less cap and centering device)	94D 147-1
T403	Horizontal Output Transformer	79D 77-2

MISCELLANEOUS CHASSIS PARTS

*CR301	Video Detector	1N60, 1N87 or 1N295
CR401	Diode, Dual Selenium	93B 5-4
CR501	Rectifier, Selenium (350 MA)	93A 4-4
CR502	Rectifier, Selenium (350 MA)	93A 4-4
M201	Speaker, 4" PM	78B 122-2
M502	Interlocking Plug	88A 36
S501	Switch, On-Off Power	Part of R208
	Picture Centering Device	94D 148-1

*Alternate types used. Replace with same part as original.

Schematic for 16F1 Television Chassis Stamped Run 15.

- For waveform measurement, all controls set for normal picture.
- Peak-to-peak voltages may vary slightly from those shown.

SCHEMATIC NOTES

Numbers and letters inside hexagons indicate alignment points.

Fixed resistor values shown in ohms ± 10% tolerance, ½ watt; capacitor values shown in micromicrofarads ± 20% unless otherwise specified.

NOTE: K = x 1000, MEG = x 1,000,000, MF = microfarad.

VOLTAGES AND WAVEFORMS

- Isolation transformer used. Line Voltage: 117 volts AC.
- Set Channel Selector on an unused channel. Contrast control fully clockwise; all other controls counterclockwise. Do not disturb Horizontal Lock adjustment.
- Antenna disconnected and terminals shorted together.
- DC voltages measured with VTVM between tube socket terminals and chassis, unless otherwise indicated.
- Voltages marked (*) will vary widely with control settings.
- Waveforms taken with transmitted signal input to television chassis.

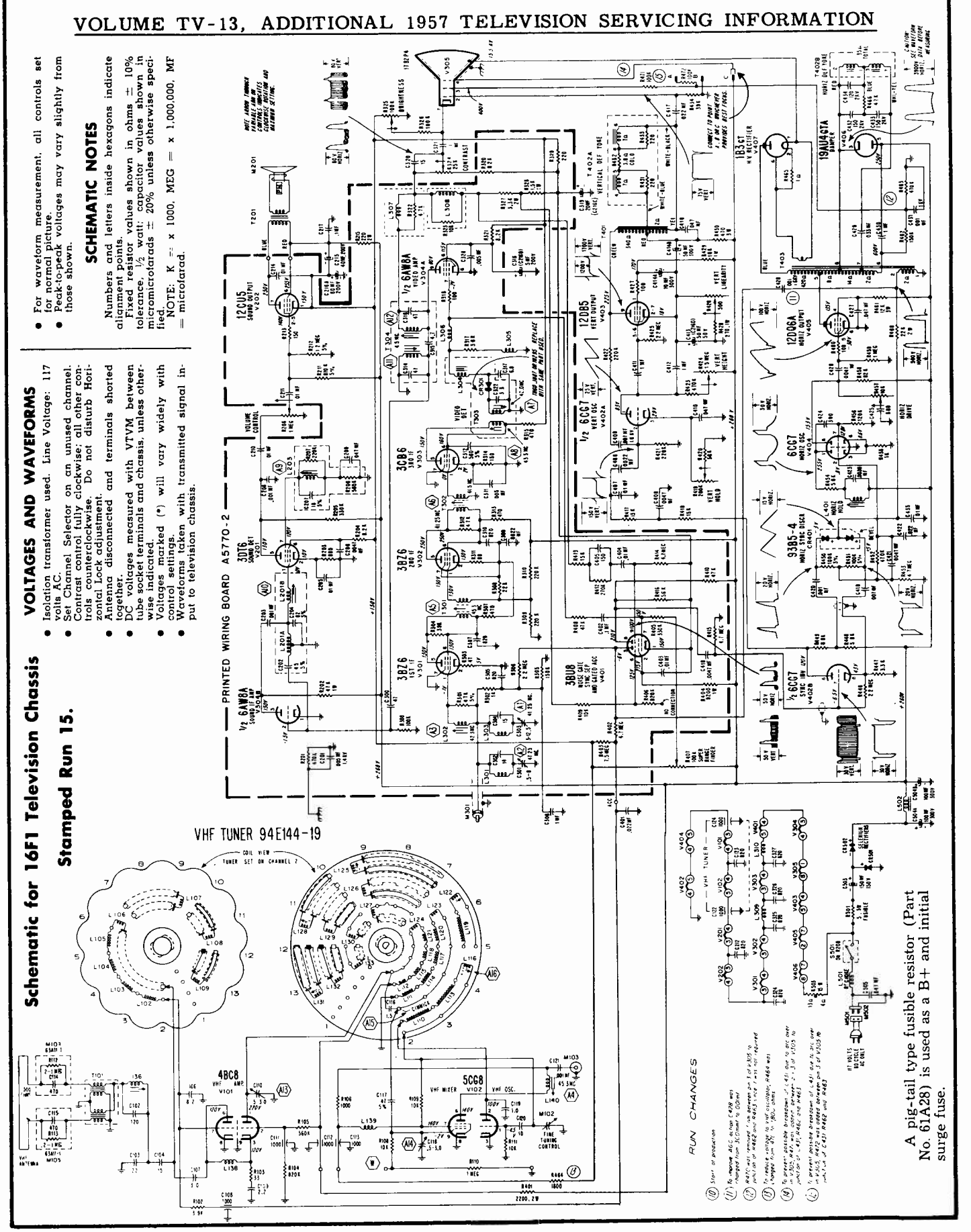

A pig-tail type fusible resistor (Part No. 61A28) is used as a B+ and initial surge fuse.

Admiral Corporation

Chassis 16H1 used in Models P14D11, P14D12, P14D13, P14D14, and
Chassis 16AH1 used in Models PA14D11, PA14D12, PA14D13, PA14D14.

Circuit of 16H1 on page 13. Chassis 16AH1 identical except for UHF/VHF tuner.

HORIZONTAL LOCK AND HORIZONTAL DRIVE ADJUSTMENT

A receiver which requires Horizontal Lock or Horizontal Drive adjustment can be corrected only by following in exact detail the procedure given here.

Note: If Horizontal Drive adjustment is not properly made, it may be difficult to obtain sufficient picture width and brightness. Also note, that there is some interaction between these controls; Horizontal Lock having lesser effect. Adjust as follows:

1. Allow receiver to warm up for a few minutes. Tune in a station, set the Brightness and Contrast controls for normal picture. Important: Before proceeding, be sure that the Super Range Finder control (AGC) is adjusted.
2. Turn Horizontal Drive control fully clockwise. Note at this point, picture compression and/or foldover will appear near the center of the picture. Very slowly turn the Horizontal Drive adjustment counterclockwise, just to the point at which picture foldover and/or compression disappears. At this point, maximum width and brightness is also produced. Caution: Turning the Horizontal Drive control too far counterclockwise will shorten life of the horizontal output tube.
3. Reduce Contrast to minimum. If picture loses horizontal sync, adjust Horizontal Lock so that picture remains in sync and bending of vertical lines does not appear at top of picture. If Horizontal Lock requires adjustment, repeat steps 2 and 3.

TUBE LOCATIONS

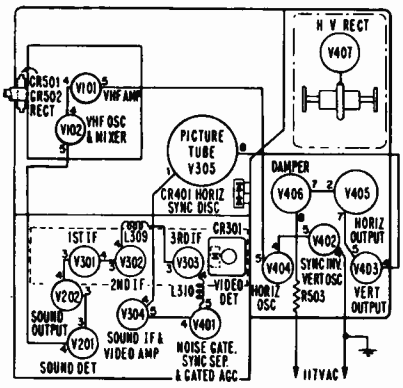

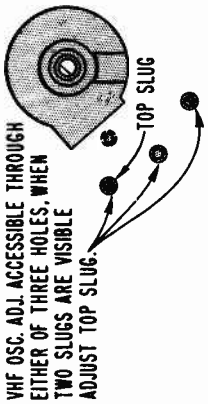

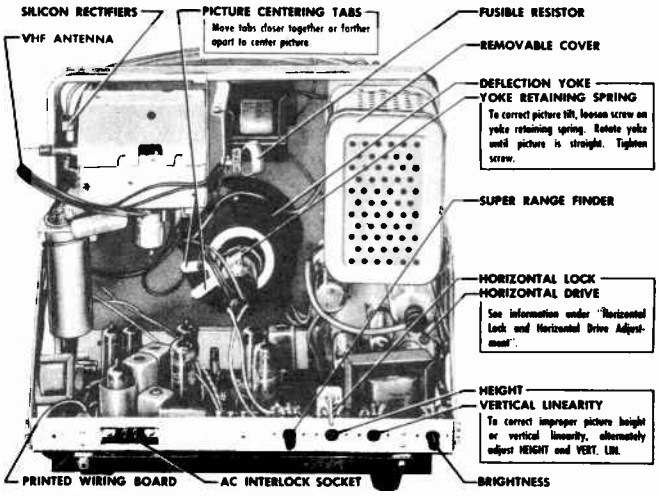

Rear View of Chassis Showing Adjustment Locations.

PARTS LIST

Only special parts are listed below.

RESISTORS

Sym.	Description	Part No.
R208	1 megohm, Volume control (R208 includes switch S501)	75D 1-93
R324	25,000 ohms, Contrast control	75D 20-98
R325	100,000 ohms, Brightness control	75D 20-101
R407	100,000 ohms, Range Finder control	75D 20-101
R419	200,000 ohms, Vertical Hold control	75D 20-97
R424	1.5 megohms, Height control	75D 20-104
R429	500 ohms, Vert. Lin. control	75D 20-100
R432	3.8 ohms (measured cold) thermistor	61A 27
R457	10,000 ohms, Horiz. Drive control	75D 20-106
R501	7.5 ohms, 5 watts, fusible	61A 22-2
R503	28 ohms, 15 watts, tapped candohm	61A 5-14

CAPACITORS

Sym.	Description	Part No.
C202	4.5 mmf, 450 volts, 5%, cer.	65B 27-045
C204	82 mmf, 500 volts, 5%, ceramic, NPO temp. coeff.	65D 10-98
C207	18 mmf, 500 volts, 5%, ceramic N220 temp. coeff.	65D 10-140
C209	.047 mf, 200 volts, upright paper	64B 16-55
C215	40 mf, 200 volts, electrolytic	67A 25-2
C216A	60 mf, 200 volts	
C216B	5 mf, 200 volts	
C216C	20 mf, 200 volts	electrolytic 67D 15-307
C216D	50 mf, 50 volts	
C301	.5 to 8 mmf, ceramic trimmer	66A 38-8
C302	14 mmf, 450 volts, ceramic, NPO temp. coeff.	65D 6-40
C303	3 to 12.5 mmf, cer. trimmer	66A 38-7
C304	18 mmf, 500 volts, 5%, ceramic, N220 temp. coeff.	65D 10-140
C312	560 mmf, 500 volts, 5%, cer.	65D 6-131
C318	5 mf, 200 volts, electrolytic	See C216B
C320	15 mmf, 450 volts, 10% cer.	65B 28-150
C321	.1 mf, 200 volts, upright paper	64B 16-53
C409	.001 mf, 1.6 KV, 10% (mylar dielec.)	64B 2-32
C410	.047 mf, 200 volts, 10% (mylar dielec.)	64C 26-59
C413	50 mf, 50 volts, electrolytic	See C216D
C414A	10 mf, 300 volts	
C414B	50 mf, 300 volts	electrolytic 67D 15-204
C419	.001 mf, 400 volts, 10% (mylar dielec.)	64C 24-45
C420	.001 mf, 400 volts, 10% (mylar dielec.)	64C 24-45
C431	.001 mf, 1 KV, 10%, cer. disc	65D 10-147
C432	210 mmf, 2KV, 10%, cer. disc, N1500 temp. coeff.	65D 10-151
C433	210 mmf, 2 KV, 10%, cer. disc, N1500 temp. coeff.	65D 10-151
C435	120 mmf, 2 KV, 10%, cer. disc, N1500 temp. coeff.	65D 10-148
C503	100 mf, 150 volts, electrolytic	67D 15-202
C504A	100 mf, 300 volts	
C504B	100 mf, 300 volts	electrolytic 67D 15-306

COILS AND TRANSFORMERS

Sym.	Description	Part No.
L201	Phase Shift and Sound IF Coil	72B 186-1
L203	Quadrature Coil	72C 132-18
L301	47.25 MC Trap Coil	73B 37-1
L302	IF Input Coil	72C 132-31
L303	41.25 MC Trap Coil	73B 37-1
L304	RF Choke Coil (orange dot)	73B 31-4
L305	Video Peaking Coil	73B 5-34
L306	RF Choke Coil (yellow dot)	73B 31-3
L307	Video Peaking Coil	73B 5-23
L308	Video Peaking Coil	73B 5-36
L401	Horizontal Lock Coil	94C 17-7
L501	RF Choke Coil (brown dot)	73B 31-1
L502	Filter Choke (11 henry)	74B 18-24
T201	Audio Output Transformer	79D 33-15
T301	1st IF Transformer	72C 132-23
T302	2nd IF Transformer	72C 132-23
T303	3rd IF Transformer	72B 19-2
T304	Sound Take-off Transformer	72C 185-2
T401	Vertical Output Transformer	79B 43-13
T402	Deflection Yoke (less cap and centering device)	94D 147-1
T403	Horizontal Output Transformer	79D 77-1

MISCELLANEOUS CHASSIS PARTS

*CR301	Video Detector	1N60, 1N87 or 1N295
CR401	Diode, Dual Selenium	93B 5-4
CR501	Rectifier, Silicone (500 MA)	93A 11
CR502	Rectifier, Silicone (500 MA)	93A 11
M201	Speaker, 3½" PM	78B 120-2
M501	Interlocking Plug	88A 36
S501	Switch, On-Off Power	Part of R208
	Picture Centering Device	94D 148-1

*Alternate types used. Replace with same part as original.

Schematic for 16H1 Television Chassis Stamped Run 15.

VOLTAGES AND WAVEFORMS

- Isolation transformer used. Line Voltage: 117 volts AC.
- Set Channel Selector on an unused channel. Contrast control fully clockwise; all other controls counterclockwise. Do not disturb Horizontal Lock adjustment.
- Antenna disconnected and terminals shorted together.
- DC voltages measured with VTVM between tube socket terminals and chassis, unless otherwise indicated.
- Voltages marked (*) will vary widely with control settings.

- Waveforms taken with transmitted signal input to television chassis.
- For waveform measurement, all controls set for normal picture.
- Peak-to-peak voltages may vary slightly from those shown.

SCHEMATIC NOTES

Numbers and letters inside hexagons indicate alignment points.

Fixed resistor values shown in ohms ± 10% tolerance, ½ watt; capacitor values shown in micromicrofarads ± 20% unless otherwise specified.

NOTE: K = x 1000, MEG = x 1,000,000, MF = microfarad.

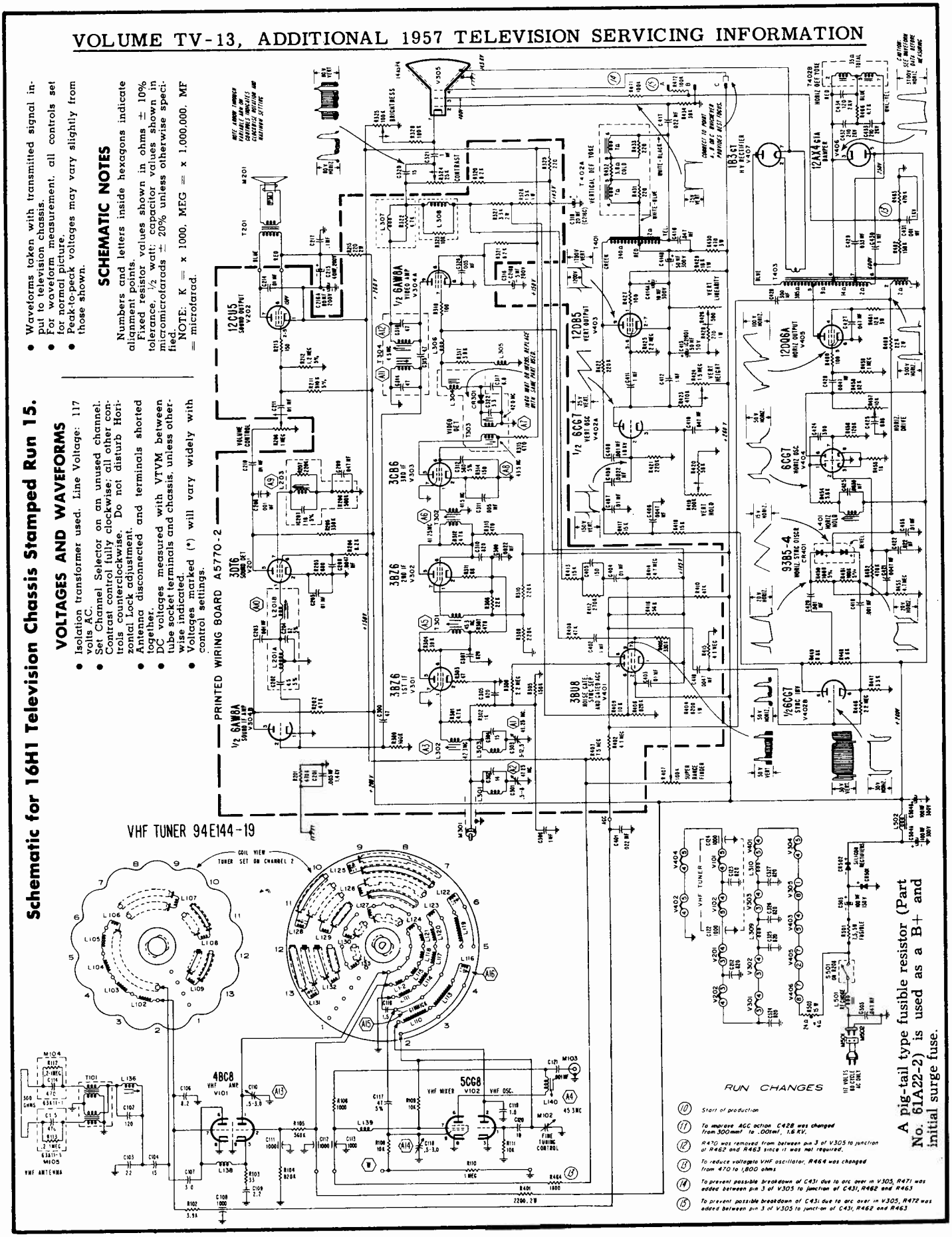

A pig-tail type fusible resistor (Part No. 61A22-2) is used as a B+ and initial surge fuse.

Admiral

16B1, 16D1 and 16E1

Chassis 16AB1, 16AD1, 16AE1, differ from the above only in using UHF/VHF tuner.

VHF Models:		
C21E11	C21E22	T21E11
C21E12	C21E23	T21E12
C21E13	C21E24	T21E13
C21E14	C21E25	T21E21
	L21E22	T21E22
	L21E23	T21E23

UHF/VHF Models:		
CA21E11	CA21E22	TA21E11
CA21E12	CA21E23	TA21E12
CA21E13	CA21E24	TA21E13
CA21E14	CA21E25	TA21E21
	LA21E22	TA21E22
	LA21E23	TA21E23

(Service material on pages 14 through 18)

ADJUST CHANNEL SLUGS

VHF channel slug adjustment can be made without removing chassis from the cabinet.

IMPORTANT: Always make adjustment on lowest channel first, then work up, in order of channel number to the highest channel. (For example, if channels 2, 9, 7 and 5 are received, adjust in this order: 2, 5, 7, 9.)

See illustration at the right for location of channel slugs.

a. Turn the set on and allow 15 minutes to warm up.
b. Set **Channel Selector** for lowest channel to be adjusted. Set other controls for normal picture and sound.
c. Set **Fine Tuning** control at center of its range by rotating it approximately two turns in either direction and then one-quarter turn in the opposite direction.
d. Remove escutcheon plate above channel knob after removing mounting screw at center of plate. Note: Later sets may use snap-in plate without mounting screw.
e. Using a 1/8" blade, flexible, non-metallic tool (Admiral Part No. 98A30-19) carefully adjust the channel slug for best picture. (Note that sound is not loudest at this point.) Repeat procedure for remaining stations, adjusting them in order of their channel number (from lowest channel to highest channel).

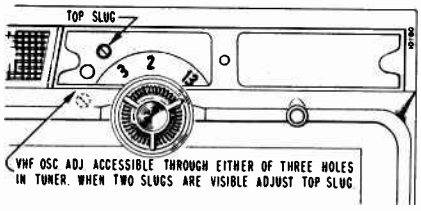

Front View of Cabinet Showing VHF Channel Adjustment Holes. Escutcheon plate removed.

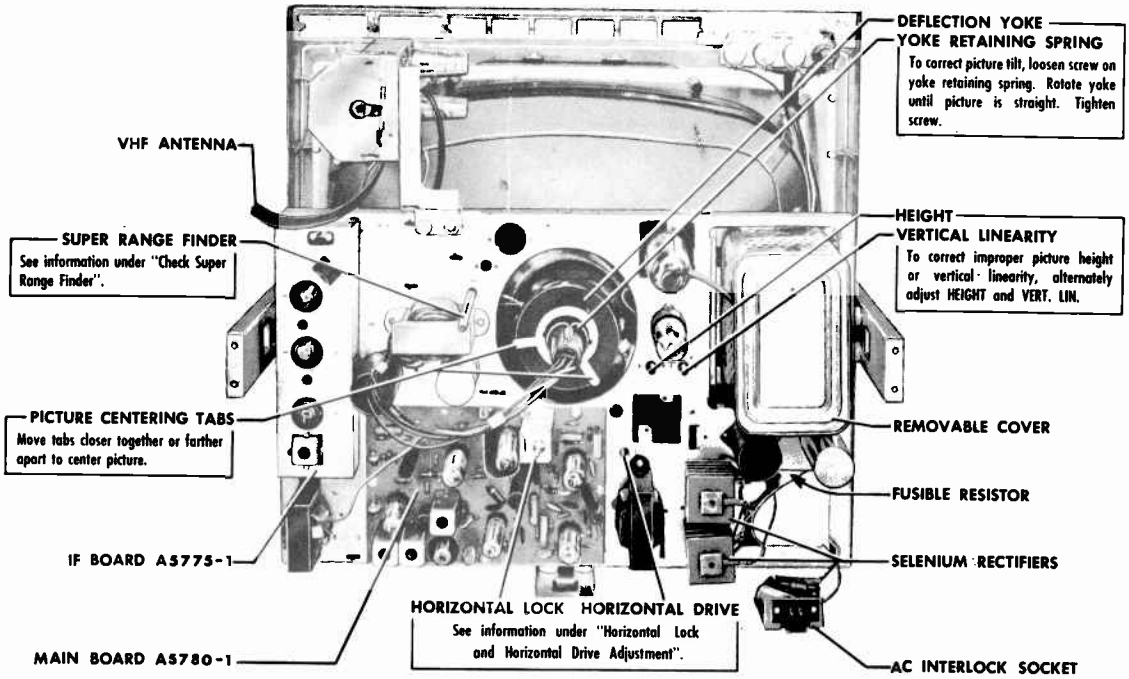

Rear View of Chassis Showing Adjustments.

CHECK SUPER RANGE FINDER

The **Super Range Finder** control is used to improve TV reception in fringe areas and in areas where there is interference. **This control should be set fully counterclockwise (to the left), if satisfactory pictures can be obtained by using the main operating controls.**

Where the TV signal strength is weak, the picture can often be improved by turning the Range Finder part way to the right.

White flashes across the picture, or "snow" in the picture, can sometimes be minimized by careful adjustment of the Range Finder. **CAUTION: If the Range Finder is turned too far to the right for a normal signal, the picture may have excessive contrast or may disappear completely.**

If the signal strength changes, it may be desirable to change the setting of the Range Finder, however, it is generally possible to set it at a compromise position which gives reasonable reception for different signal strengths.

Important: Keep the Super Range Finder setting as far to the left as possible consistent with satisfactory pictures.

HORIZONTAL LOCK AND DRIVE ADJUSTMENT

Note: If Horizontal Drive adjustment is not properly made, it may be difficult to obtain sufficient picture width and brightness. Also note that there is some interaction between these controls; **Horizontal Lock** adjustment having lesser effect. Make adjustment as follows:

1. Allow receiver to warm up for a few minutes. Tune in a station, set the **Brightness** and **Contrast** controls for normal picture. Important: Before proceeding, be sure that the **Super Range Finder** control (AGC) is adjusted according to instructions given in this manual.
2. Turn **Horizontal Drive** control fully clockwise. At this point, picture compression and/or foldover will appear near the center of the picture.
3. Very slowly turn the Horizontal Drive adjustment counterclockwise, just to the point at which picture foldover and/or compression disappears. Note that maximum width and brightness is also produced at this setting. Caution: Turning the **Horizontal Drive** control too far counterclockwise will shorten life of the horizontal output tube.
4. Reduce Contrast to minimum. If picture bends or loses horizontal sync, adjust the Horizontal Lock so that picture remains in sync and bending of vertical lines does not appear at top of picture. If Horizontal Lock adjustment was required, repeat steps 2 through 4.

CONDITIONS FOR MEASURING VOLTAGES

Warning: Pulsed high voltages are present at the caps of V405 and V407, and at pin 3 of V406. **Do not** attempt to measure voltage at these points without suitable test equipment. A VTVM with a high voltage probe should be used when measuring picture tube 2nd anode voltage.

- Set the **Channel Selector** on an unused channel. **Contrast** control fully clockwise. All other controls fully counterclockwise. Do not disturb **Horiz. Lock** and **Horiz. Drive** adjustments.
- Antenna disconnected and terminals shorted together.
- Line voltage: 117 volts AC.
- DC voltages measured with a VTVM between tube socket terminals and chassis, unless otherwise indicated.
- All voltages measured with tubes in sockets. Use of adapter sockets is recommended.

CHASSIS REMOVAL

The chassis, picture tube and front escutcheon are removable as a unit. Remove chassis as follows:

1. Remove cabinet back. Disconnect antenna leads and speaker plug.
2. At the rear of the cabinet, remove the screws which mount rear of chassis support channels to sides and bottom of cabinet.
3. Remove chassis. picture tube and front escutcheon as a unit through the front of the cabinet.
4. To reinstall chassis, insert chassis through front of cabinet. Use extreme care to see that metal locating pins (at rear of escutcheon) fit into holes in cabinet.

PICTURE TUBE REPLACEMENT

The picture tube of this receiver is mounted directly to the front escutcheon of the receiver as shown in the figure below. To replace picture tube, proceed as follows:

1. Remove chassis, picture tube and front escutcheon as a unit as instructed under Chassis Removal.
2. Remove knobs from front of set.
3. Place chassis on table with front escutcheon down.
4. Remove picture tube socket and deflection yoke from picture tube. Disconnect pilot light bracket and 2nd anode connector.
5. Disconnect bracket supporting front panel controls by removing bracket mounting screws.
6. Remove screws which mount front of chassis support channels to bosses at sides and bottom of escutcheon.
7. Carefully lift chassis up and away from picture tube.
8. To remove picture tube from escutcheon, loosen retaining screw on tube support wire. Remove screws mounting tube support straps.
9. Replace tube and reassemble chassis to escutcheon following the above procedure in reverse.

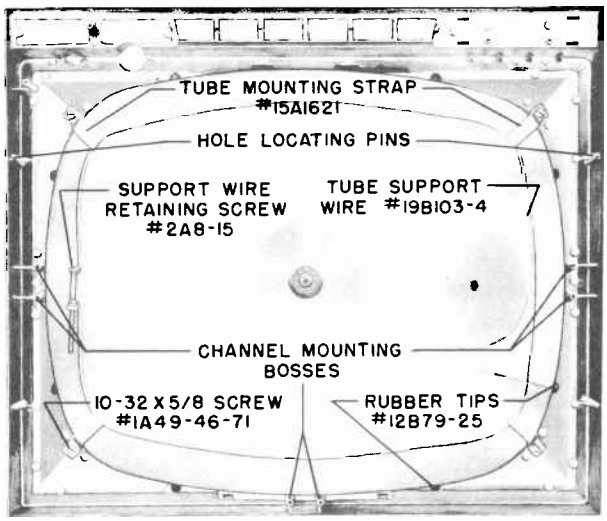

Rear View of Escutcheon with Picture Tube Mounted, Chassis is Removed.

Admiral Corp Schematic for 16B1, 16D1 and 16E1 Television Chassis Stamped Run 10

(For conditions for observing waveforms refer to page 8.)

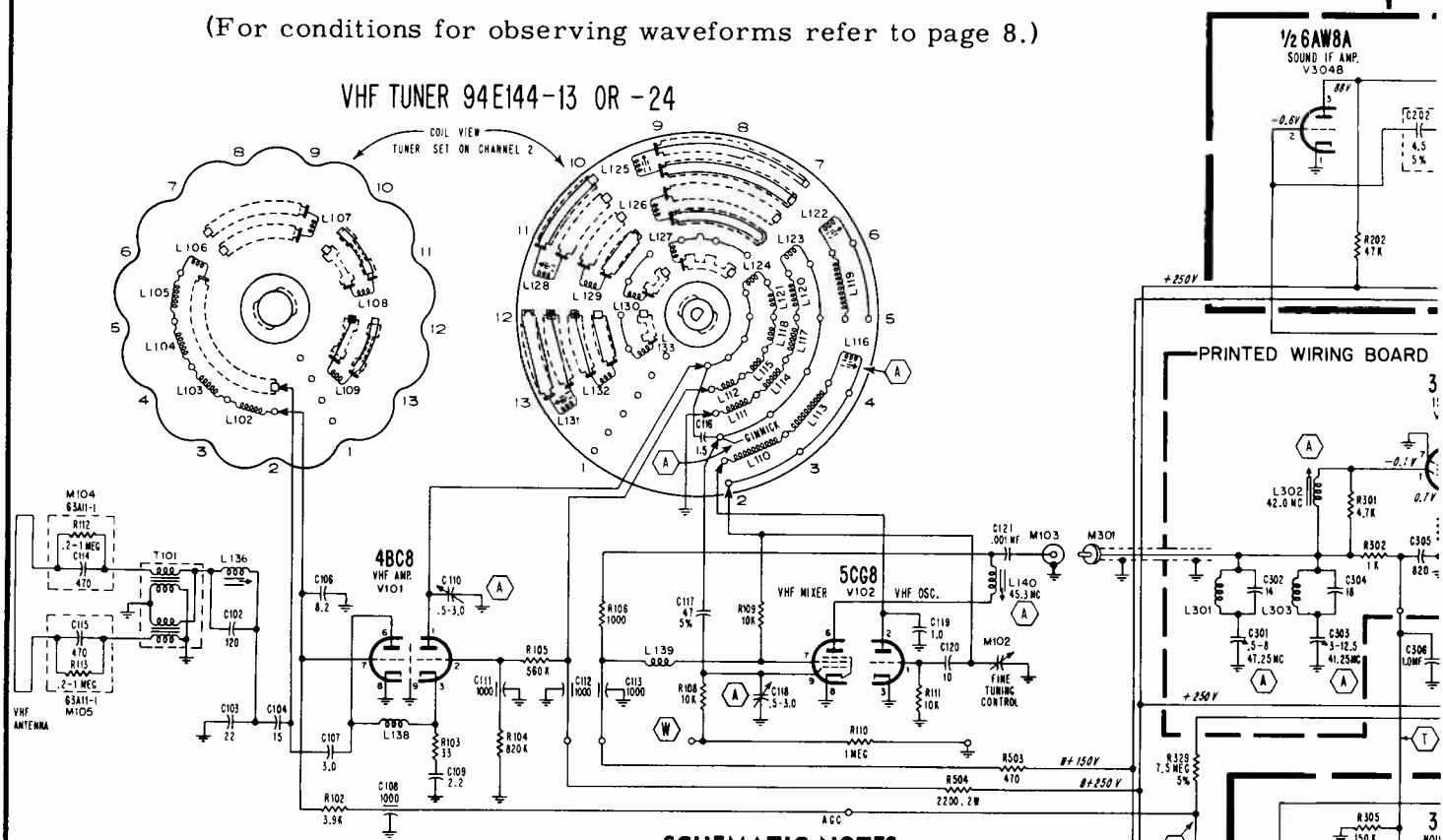

SCHEMATIC NOTES

Numbers and letters inside hexagons indicate alignment points.

Fixed resistor values shown in ohms ± 10% tolerance, ½ watt; capacitor values shown in micromicrofarads ± 20% unless otherwise specified.

NOTE: K = x 1000, MEG = x 1,000,000, MF = microfarad.

TUBE LOCATIONS

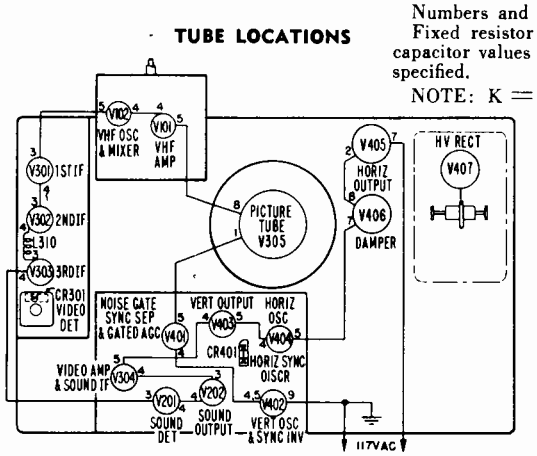

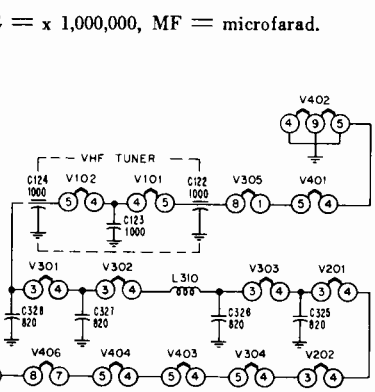

TUBE COMPLEMENT

V101—4BC8
V102—5CG8
V201—3DT6
V202—12CU5
V301—3BZ6
V302—3BZ6
V303—3CB6
CR301—Video Detector IN295
V304—6AW8A
V305—21CEP4A
CR401—Dual Selenium Diode 93B5-4

V401—3BU8
V402—7AU7
V403—12DB5
V404—6CG7
V405—25CD6GB
V406—19AU4GTA
V407—1B3GT

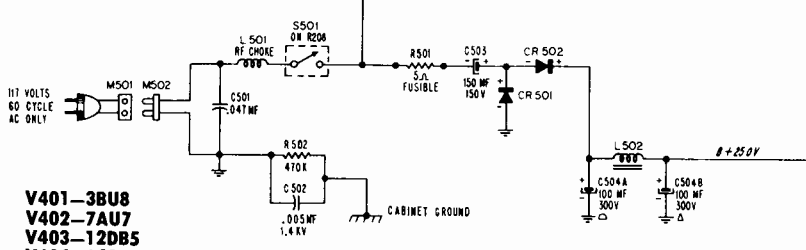

FUSIBLE RESISTOR

A pig-tail type fusible resistor (Part No. 61A28) is used as a B+ and initial surge fuse.

VOLUME TV-13, ADDITIONAL 1957 TELEVISION SERVICING INFORMATION

ADMIRAL Schematic for 16B1, 16D1, 16E1. (16AB1, 16AD1, 16AE1 use UHF tuner)

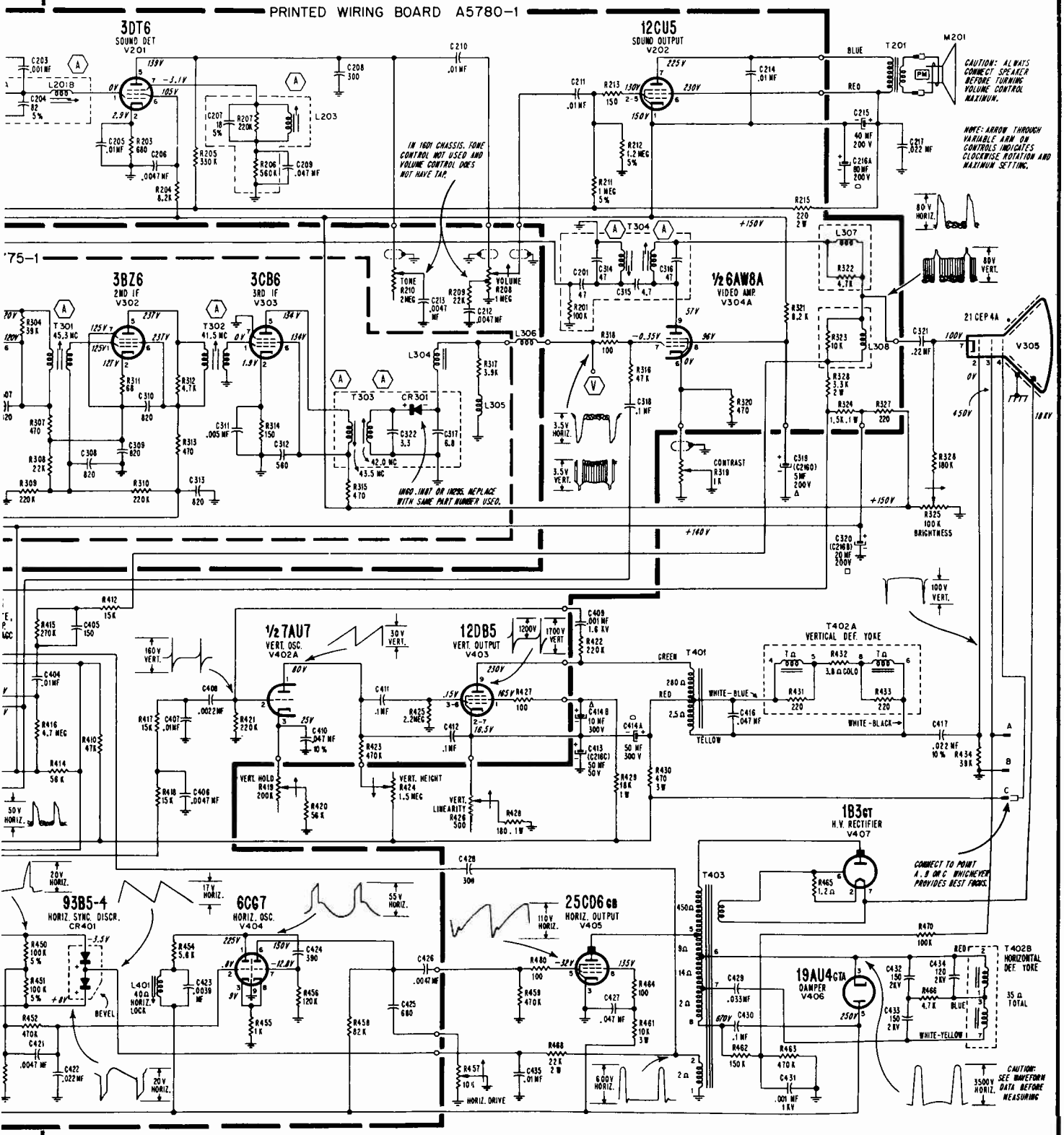

WARNING: The chassis of this receiver is connected directly to one side of the 117 volt, 60 cycle power line. Depending upon the position of the line cord plug in the wall outlet, the total AC line voltage may exist between the chassis and any grounded object. When installing or servicing, do not touch the chassis unless adequate safety precautions are taken.

Never touch the chassis and a ground (radiators, pipes, etc.) at the same time.

Do not ground chassis or connect test equipment directly to it unless an isolation transformer is used. If an isolation transformer is not available, a neon lamp can be used to determine if the chassis is "hot".

ADMIRAL Chassis 16B1, 16D1, 16E1, 16AB1, 16AD1, 16AE1, (Continued)

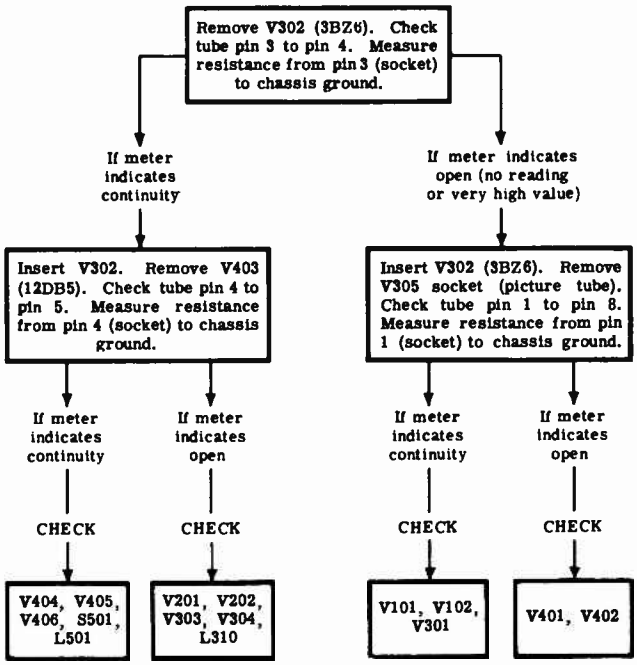

Simplified Procedure for Locating an Open Heater Tube.

SERVICING TUBES

To prevent the possibility of electrical shock and damage to tube pins and socket contacts, do not remove or insert tubes unless the set is disconnected from the power line.

The heaters of tubes in this receiver (except V407, high voltage rectifier) are connected in series. If tubes do not light, be sure all tubes are firmly seated in sockets and check the interlock line cord to see that it is making contact.

A total of 15 tubes are used in the heater circuit of this receiver. The tube location diagram contains a circuit of tube heater connections. Through the use of this diagram and an ohmmeter, an "open" in the heater circuit can be located very quickly without substituting or testing all tubes.

The simplified step by step procedure can be used for locating an open heater tube. Measurements are made with an ohmmeter from the tube socket pin to chassis ground with the tube removed. IMPORTANT: The control shafts and the control panel bracket are insulated from the chassis. The heater string has a total resistance, when cold, of approximately 25 ohms. If the ohmmeter reads approximately 25 ohms or less, the heater circuit is continuous; if the ohmmeter indicates a very high resistance (above 10,000 ohms), the heater circuit is open.

NOTE: Socket pins are counted in a counterclockwise direction when viewed from the tube side of the socket.

View of PRINTED WIRING SIDE of IF Board A5775-1. Gray area represents printed wiring; black symbols and lines represent components and connections on opposite side.

PRINTED WIRING VIEWS

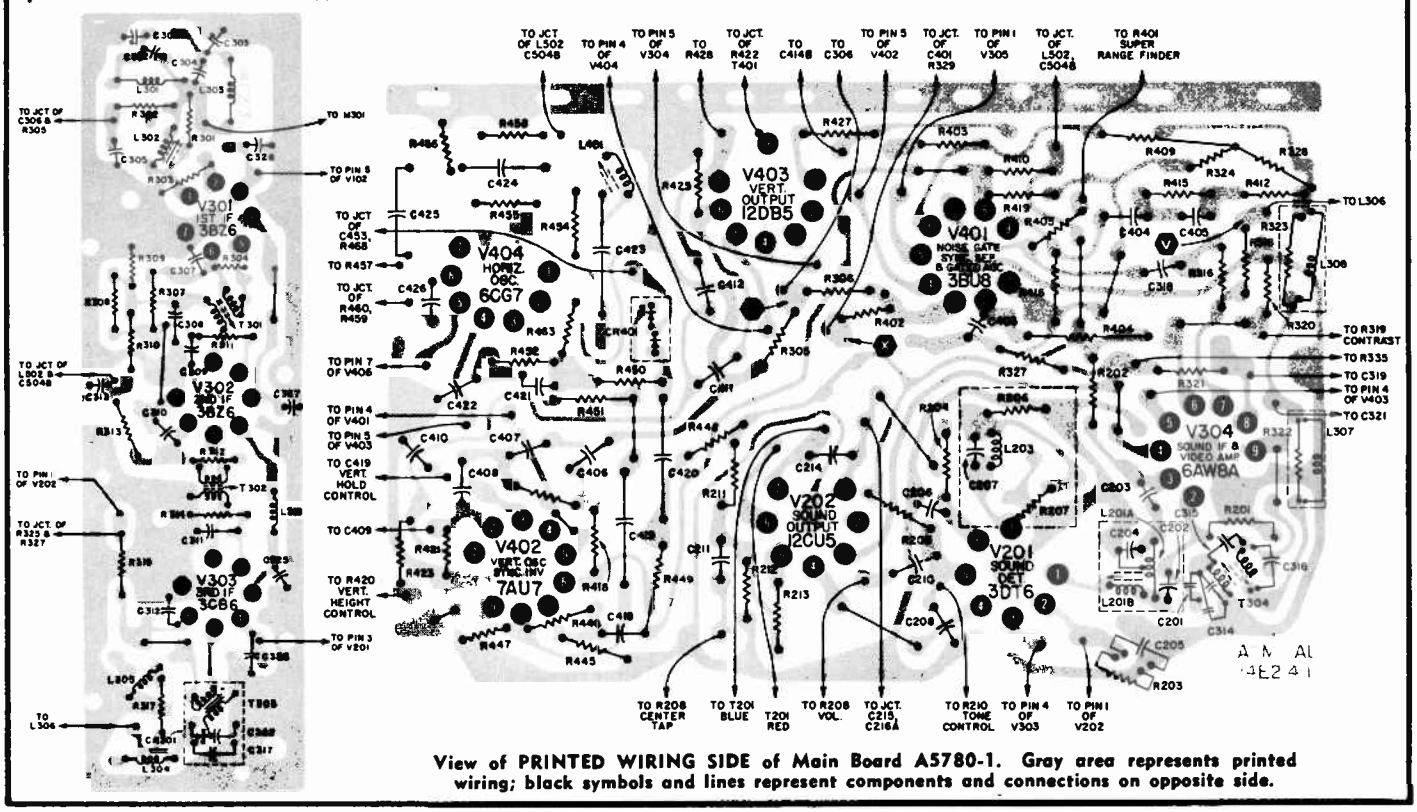

View of PRINTED WIRING SIDE of Main Board A5780-1. Gray area represents printed wiring; black symbols and lines represent components and connections on opposite side.

Admiral

TV - 17B1
HI-FI AMP - 4R2

Chassis 17B1 used in Models CH21F52, CH21F53, CH21F54, LH21F32, LH21F33, LH21F34,
Chassis 17AB1 is identical to 17B1 except for a UHF/VHF tuner. This chassis is used in Models CHA21F52, CHA21F53, CHA21F54, LHA21F32, LHA21F33, LHA21F34.

(Service material on pages 19 through 22)

CHECK SUPER RANGE FINDER

The **Super Range Finder** control is used to improve TV reception in fringe areas and in areas where there is interference. **This control should be set fully counterclockwise (to the left), if satisfactory pictures can be obtained by using the main operating controls.**

Where the TV signal strength is weak, the picture can often be improved by turning the Range Finder part way to the right.

White flashes across the picture, or "snow" in the picture, can sometimes be minimized by careful adjustment of the Range Finder. **CAUTION: If the Range Finder is turned too far to the right for a normal signal, the picture may have excessive contrast or may disappear completely.**

Important: Keep the Super Range Finder setting as far to the left as possible consistent with satisfactory pictures.

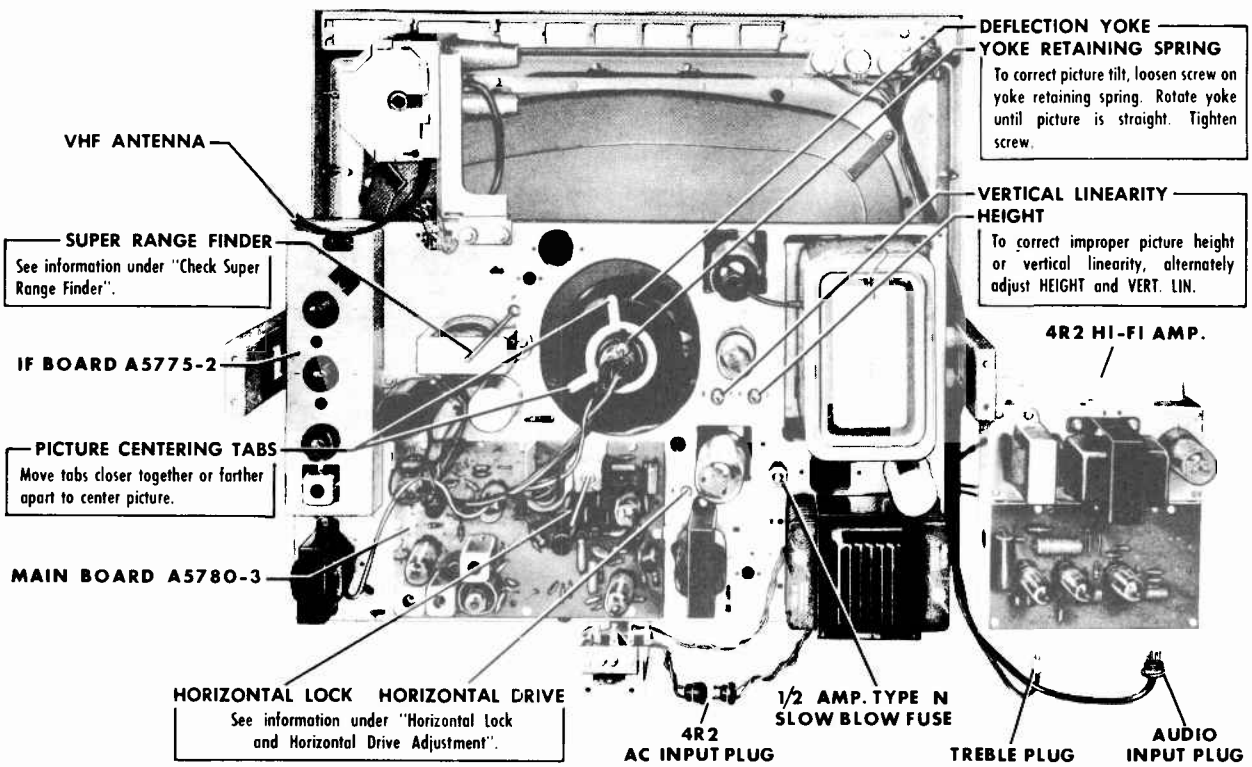

Rear View of Chassis Showing Adjustments.

CONDITIONS FOR OBSERVING WAVEFORMS

Warning: Pulsed high voltages are present at the caps of V405 and V407, and at pin 3 of V406. **Do not** attempt to observe waveforms at these points unless suitable test equipment is used.

- Set all controls for normal picture. Set **Super Range Finder** control fully counterclockwise. After the receiver is set for a normal picture, turn the **Contrast** control fully clockwise.
- Oscilloscope sweep is set at 30 cycles for vertical waveforms and at 7,875 cycles for horizontal waveforms, to permit 2 complete cycles to be observed.
- Peak-to-Peak voltages will vary from those shown on the schematic depending on the input signal strength, test equipment employed and chassis parts tolerance.
- Waveforms were taken with a comparatively strong transmitted signal input to the television chassis.

CONDITIONS FOR MEASURING VOLTAGES

Warning: Pulsed high voltages are present at the caps of V405 and V407, and at pin 3 of V406. **Do not** attempt to measure voltage at these points without suitable test equipment. A VTVM with a high voltage probe should be used when measuring picture tube 2nd anode voltage.

- Set the **Channel Selector** on an unused channel. **Contrast** control fully clockwise. All other controls fully counterclockwise. Do not disturb **Horiz. Lock** and **Horiz. Drive** adjustments.
- Antenna disconnected and terminals shorted together.
- Line voltage: 117 volts AC.
- DC voltages measured with a VTVM between tube socket terminals and chassis, unless otherwise indicated.
- All voltages measured with tubes in sockets. Use of adapter sockets is recommended.

Admiral Schematic for 17B1 Television and 4R2 HI-FI Amp. Chassis Stamped Run 12

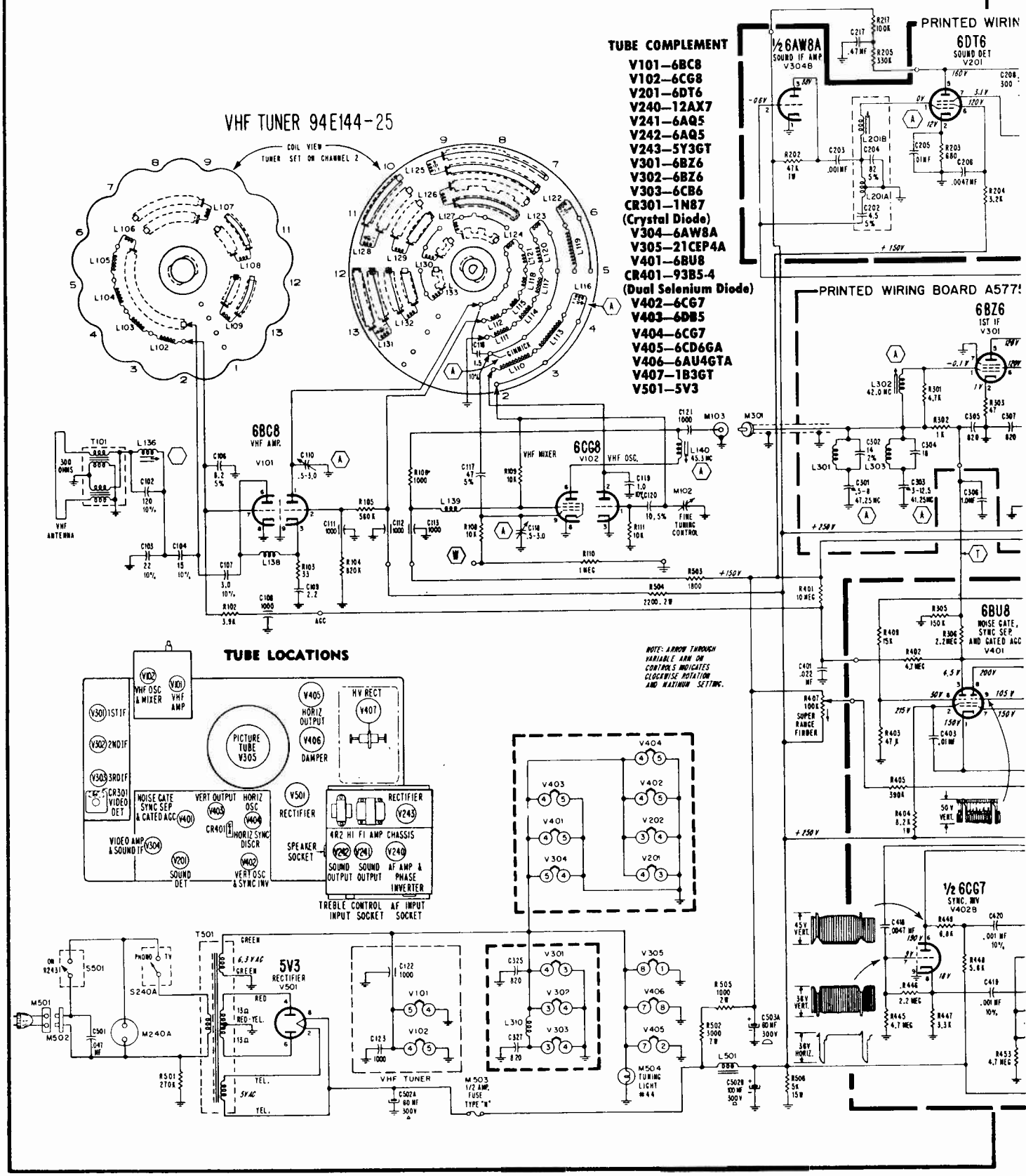

ADMIRAL Chassis 17B1 Television and 4R2 HI-FI Amplifier Schematic

Chassis 17AB1 the same except for UHF/VHF type tuner used.

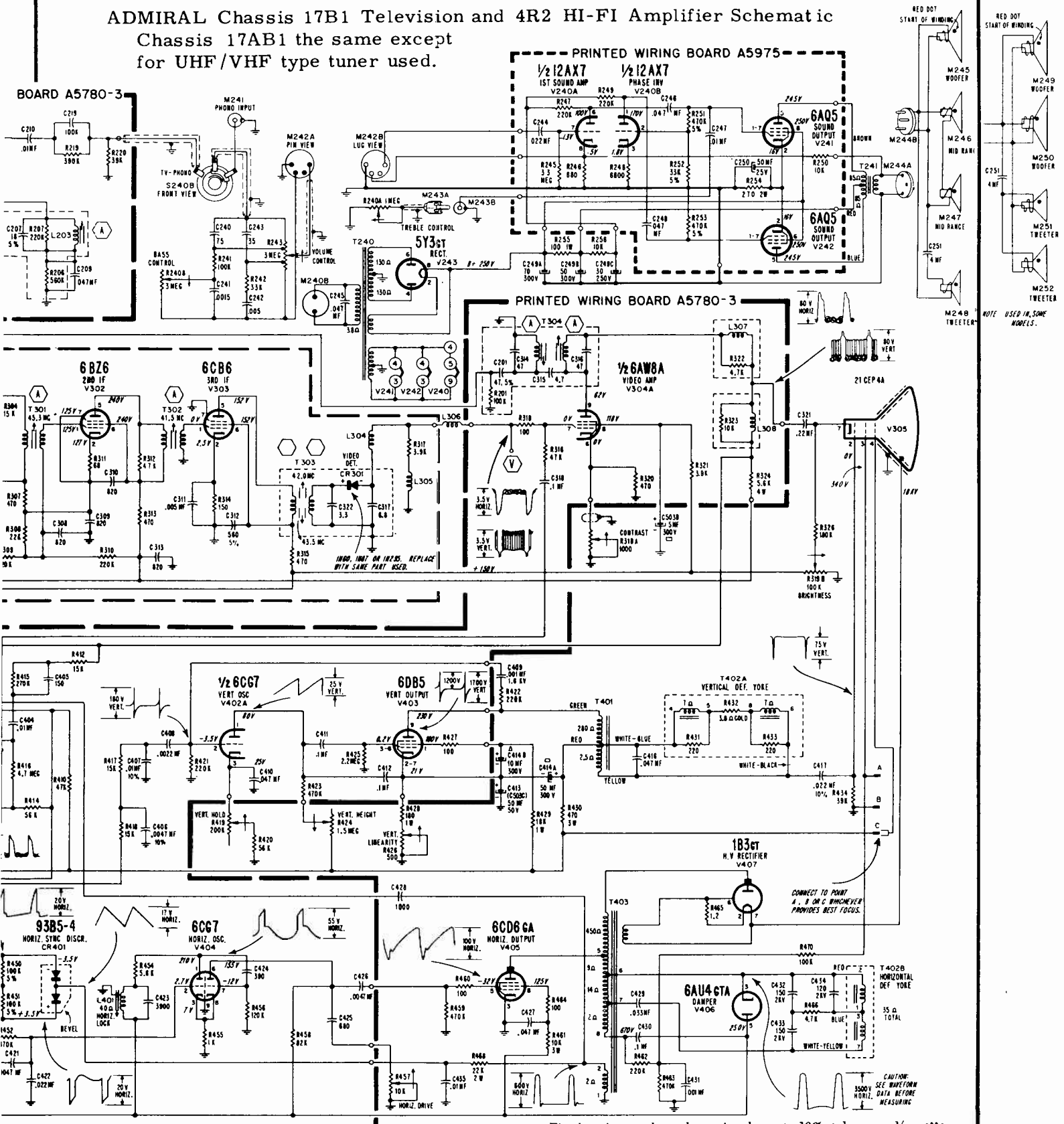

SCHEMATIC NOTES

Numbers and letters inside hexagons indicate alignment points.

Fixed resistor values shown in ohms ± 10% tolerance, ½ watt; capacitor values shown in micromicrofarads ± 20% unless otherwise specified.

NOTE: K = x 1000, MEG = x 1,000,000, MF = microfarad.

ADMIRAL Chassis 17B1 and 17AB1 Service Information (Continued)

HORIZONTAL LOCK AND DRIVE ADJUSTMENT

A receiver which requires Horizontal Lock or Horizontal Drive adjustment can be corrected only by following in exact detail the procedure given here.

Note: If Horizontal Drive adjustment is not properly made, it may be difficult to obtain sufficient picture width and brightness. Also note that there is some interaction between these controls; **Horizontal Lock** adjustment having lesser effect. Make adjustment as follows:

1. Allow receiver to warm up for a few minutes. Tune in a station, set the **Brightness** and **Contrast** controls for normal picture. Important: Before proceeding, be sure that the **Super Range Finder** control (AGC) is adjusted according to instructions given in this manual.
2. Turn **Horizontal Drive** control fully clockwise. At this point, picture compression and/or foldover will appear near the center of the picture.
3. Very slowly turn the Horizontal Drive adjustment counterclockwise, just to the point at which picture foldover and/or compression disappears. Note that maximum width and brightness is also produced at this setting. Caution: Turning the **Horizontal Drive** control too far counterclockwise will shorten life of the horizontal output tube.
4. Reduce Contrast to minimum. If picture bends or loses horizontal sync, adjust the Horizontal Lock so that picture remains in sync and bending of vertical lines does not appear at top of picture. If Horizontal Lock adjustment was required, repeat steps 2 through 4.

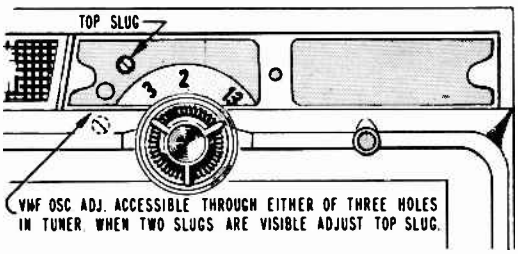

Front View of Cabinet. Escutcheon plate removed.

PRINTED WIRING VIEWS

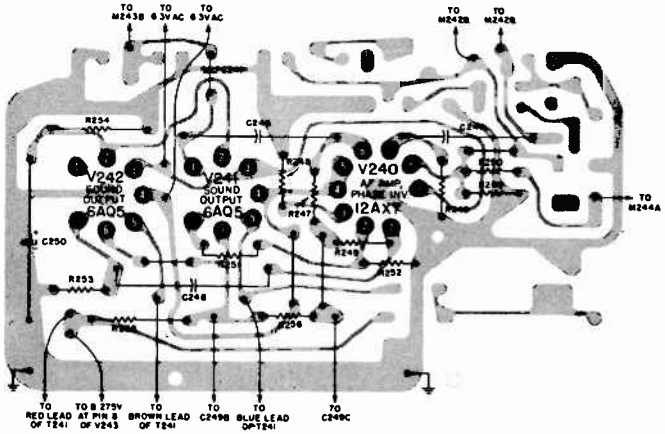

View of PRINTED WIRING SIDE OF 4R2 Hi-Fi Board A5975. Gray area represents printed wiring; black symbols and lines represent components and connections on opposite side.

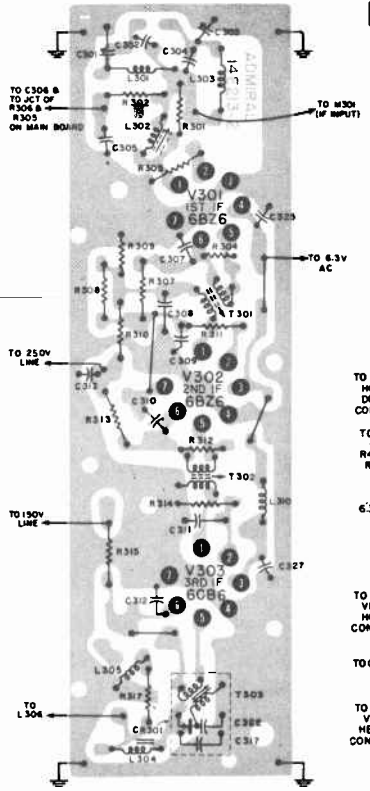

View of PRINTED WIRING SIDE of IF Board A5775-2. Gray area represents printed wiring; black symbols and lines represent components and connections on opposite side.

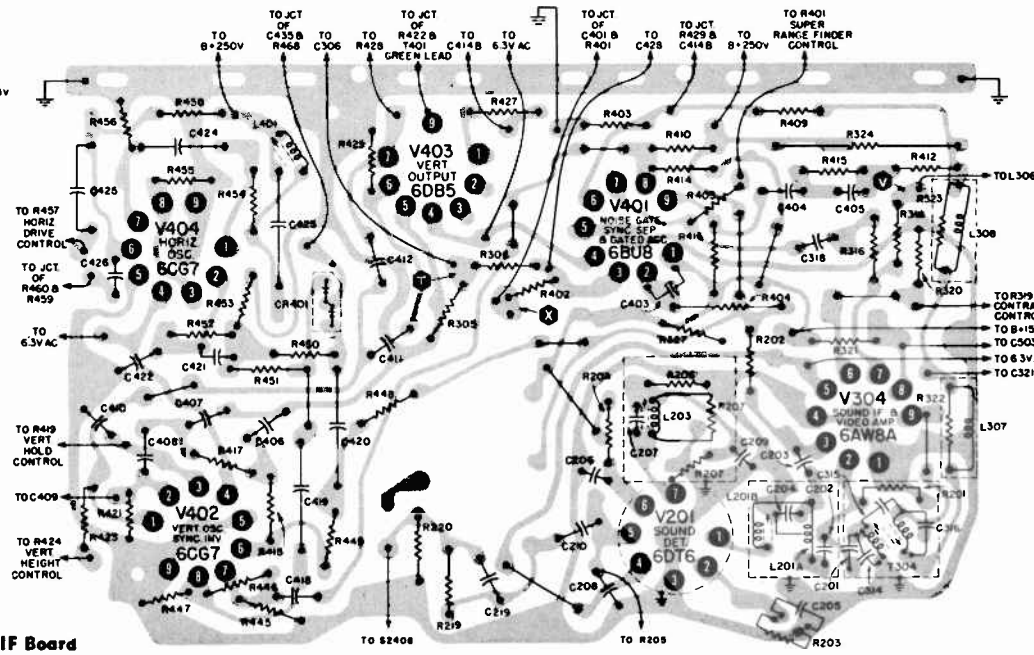

View of PRINTED WIRING SIDE of Main Board A5780-3. Gray area represents printed wiring; black symbols and lines represent components and connections on opposite side.

Admiral

17F1

Chassis 17AF1 is identical to the above chassis but uses a UHF/VHF type tuner.

Chassis 17F1 is used in Models T18A11, T18A12, and T18A13,
Chassis 17AF1 is used in Models TA18A11, TA18A12, TA18A13.

(Service material on pages 23 through 26)

REMOVING CABINET

This receiver uses a bonnet type cabinet which is easily removed. The cabinet is mounted with screws to the wood base in which the picture tube and chassis are assembled.

To remove the cabinet, proceed as follows:

1. Remove the knobs, screws from antenna terminal board and cabinet back. Disconnect speaker.
2. With the cabinet in the normal position, place it so that a side extends slightly over the edge of the work bench.
3. Remove screws which are accessible from underside of cabinet, see illustration of chassis.
4. Move cabinet forward and lift away from receiver.

IMPORTANT: If channel slugs appear in two of the three adjustment holes, adjust the lower slug. Caution: Only slight rotation of the slug will be required; turning the slug out too far will cause it to fall out of the coil.

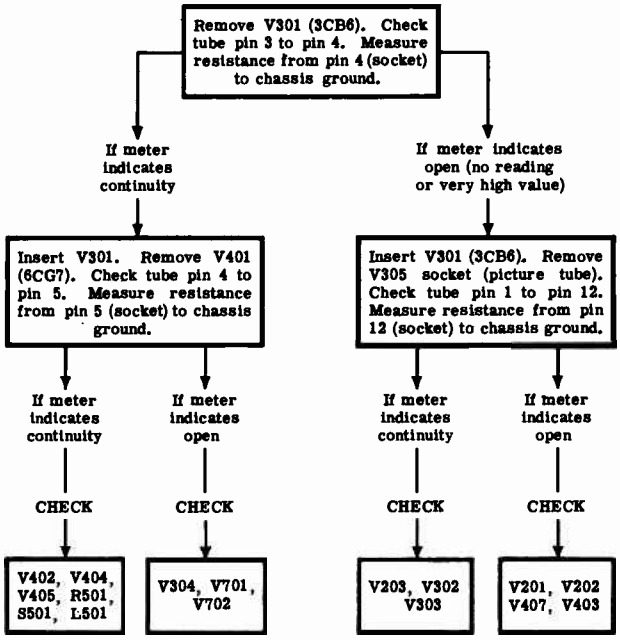

Simplified Procedure for Locating an Open Heater Tube.

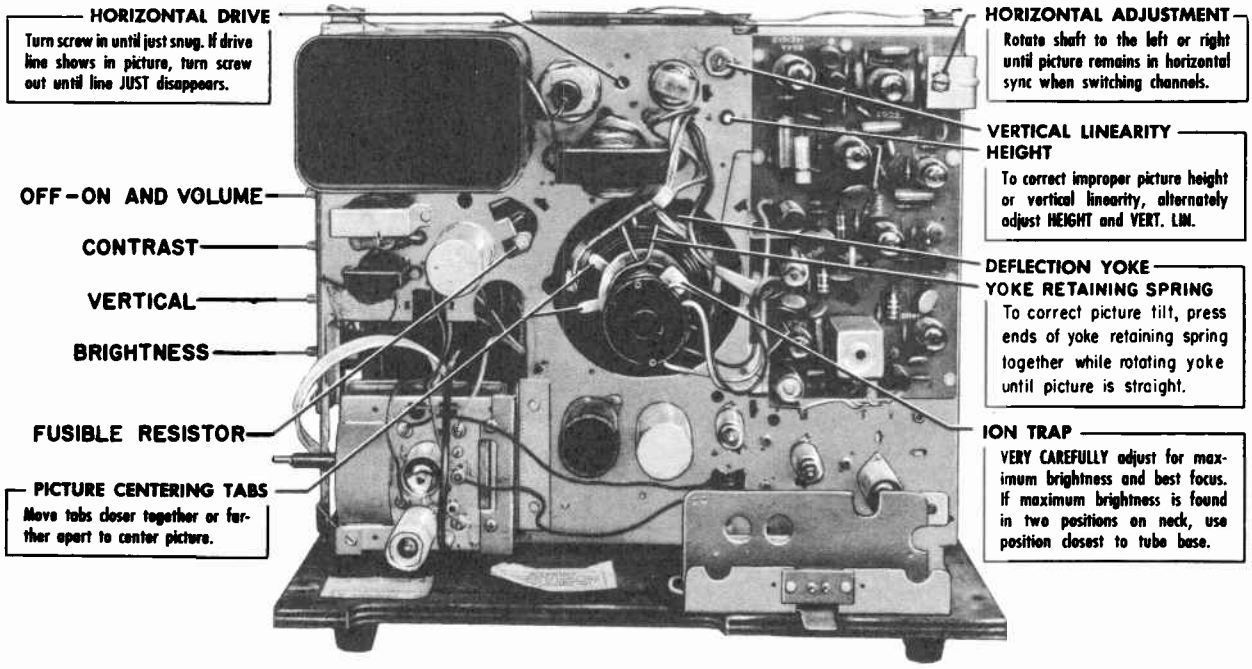

Rear View of Chassis Showing Adjustment Locations.

Admiral Corporation Schematic for 17F1 Television Chassis Stamped Run 15

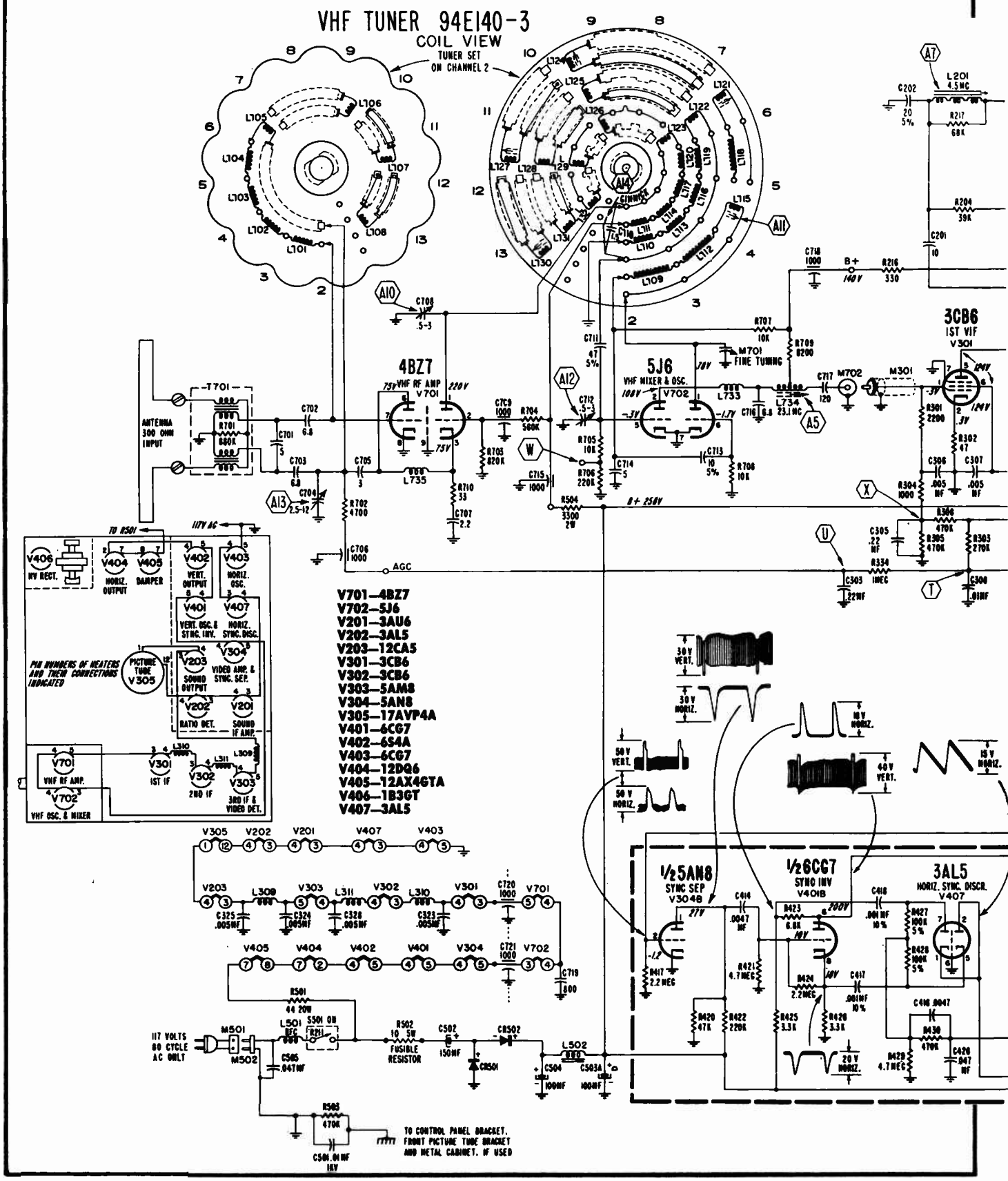

ADMIRAL Chassis 17F1 Schematic Diagram (17AF1 the same except for UHF tuner)

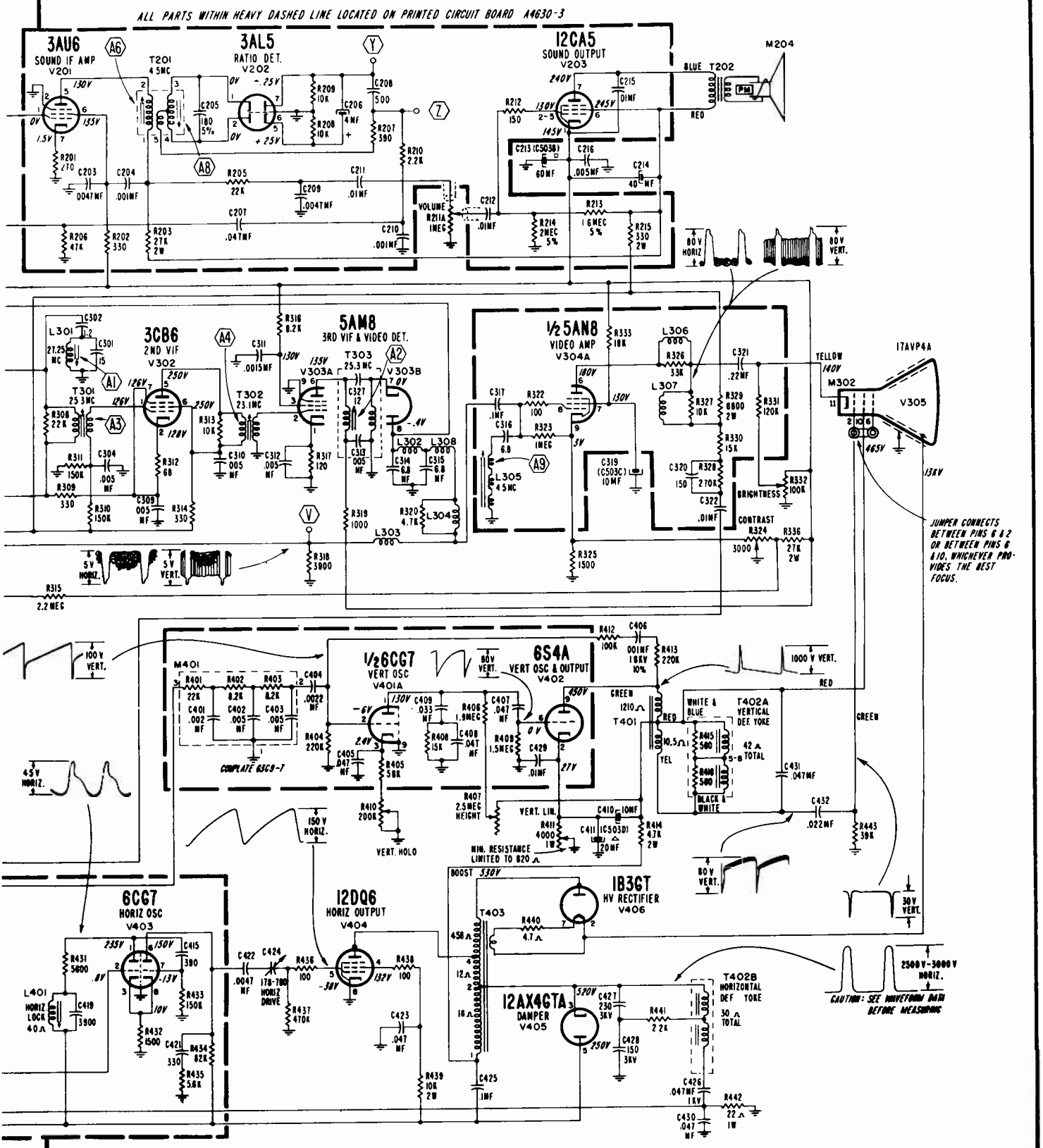

(For conditions for observing waveforms and measuring voltages see page 26)

ADMIRAL Chassis 17F1 and 17AF1 Service Information (Continued)

PICTURE TUBE REPLACEMENT

The front of the picture tube is supported by a metal band which mounts to the wood base. The rear of the picture tube is supported by the deflection yoke at the center of the chassis.

To replace picture tube, proceed as follows:

1. Remove cabinet.
2. Disconnect picture tube socket and high voltage lead. Remove ion trap, yoke clamping spring and deflection yoke.
3. Loosen nuts at the two bottom tube support straps. Remove nuts at the two top tube support straps. Disconnect flexible lead connecting to top strap. Disengage top straps.
4. Remove screw and nut at the center of the picture tube mounting band. Spread band apart.
5. With one hand at each side of the picture tube front, firmly grasp the picture tube and carefully move it upward and forward until it clears the front stop brackets.

PICTURE TUBE HANDLING PRECAUTION

Due to the high vacuum and large surface area of picture tubes, great care must be exercised when handling these tubes. Shatterproof goggles, heavy gloves and a protective apron should be worn while handling or installing a picture tube. The picture tube must not be scratched, bumped or subjected to excessive pressure, as fracture of the glass may result in an explosion of considerable violence.

SCHEMATIC NOTES

(A1), (A2),.....(Y), (Z), etc., indicate alignment points and alignment connections.

IMPORTANT: Before making waveform and voltage measurements, see instructions below.

Fixed resistor values shown in ohms ± 10% tolerance, ½ watt; capacitor values shown in micromicrofarads ± 20% tolerance unless otherwise specified.

NOTE: K=x 1,000, MEG=x 1,000,000, MF=microfarad.

CONDITIONS FOR OBSERVING WAVEFORMS

Caution: Pulsed high voltages are present on the caps of V404 and V406, and at pin 3 of V405. **Do not** attempt to observe waveforms at these points unless suitable test equipment is used. Waveforms at these points may be taken with a capacitive voltage divider probe. The waveform at pin 3 of V405 may also be taken by clipping or twisting the lead from the high side of the oscilloscope over the insulation on the lead connecting to pin 3. If the waveform is taken in this manner, its shape will be the same, but the peak-to-peak voltage will be somewhat lower, depending on the degree of coupling between the oscilloscope and the lead connecting to pin 3 of V405.

- Set all controls for a normal picture. After the receiver is set for a normal picture, turn the **Contrast** control fully clockwise.
- Oscilloscope sweep is set at 30 cycles for vertical waveforms and at 7,875 cycles for horizontal waveforms to permit 2 complete cycles to be observed.
- Waveforms should resemble those shown on the schematic.
- Peak-to-peak voltages will vary from those shown on the schematic, depending on the input signal strength, test equipment employed and chassis parts tolerance.
- Waveforms were taken with a comparatively strong transmitted signal input to the television chassis.

CONDITIONS FOR MEASURING VOLTAGES

Caution: Pulsed high voltages are present on the caps of V404 and V406, and at pin 3 of V405. **Do not** attempt to measure voltages at these points without suitable test equipment. A VTVM with a high voltage probe may be used when measuring picture tube 2nd anode voltage.

- Set the **Channel Selector** on an unused channel. **Contrast** control fully clockwise. All other controls counterclockwise. Do not disturb **Horizontal Hold** or **Horiz. Drive** adjustments.
- Antenna disconnected and terminals shorted together.
- Line voltage: 117 volts AC.
- DC voltages measured with a VTVM between tube socket terminals and chassis, unless otherwise indicated.
- All voltages measured with tubes in sockets. Use of adapter sockets is recommended.

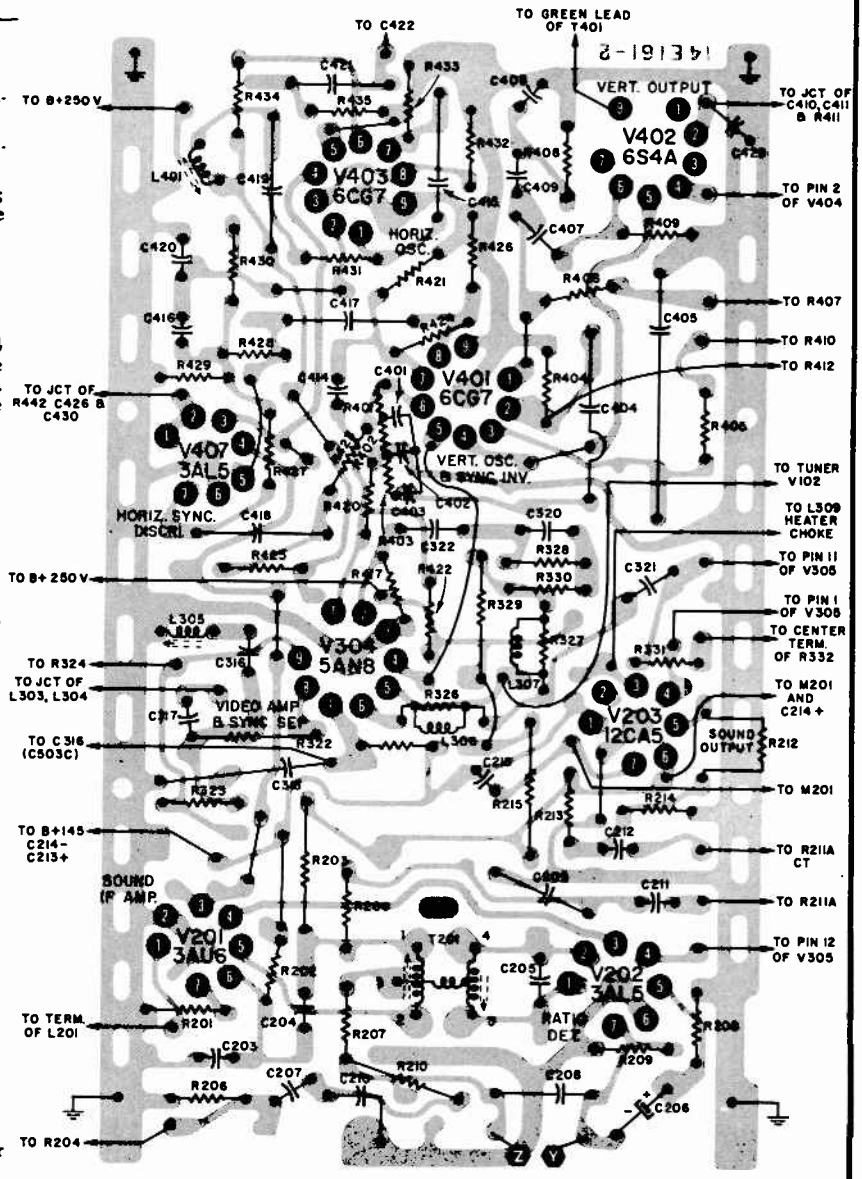

View of PRINTED WIRING SIDE of Sync Board A4630-3. Gray area represents printed wiring; black symbols and lines represent components and connections on opposite side.

CROSLEY

Chassis 488

Models: AT-11M AC-11M
AT-11B AC-11B
AH-11B

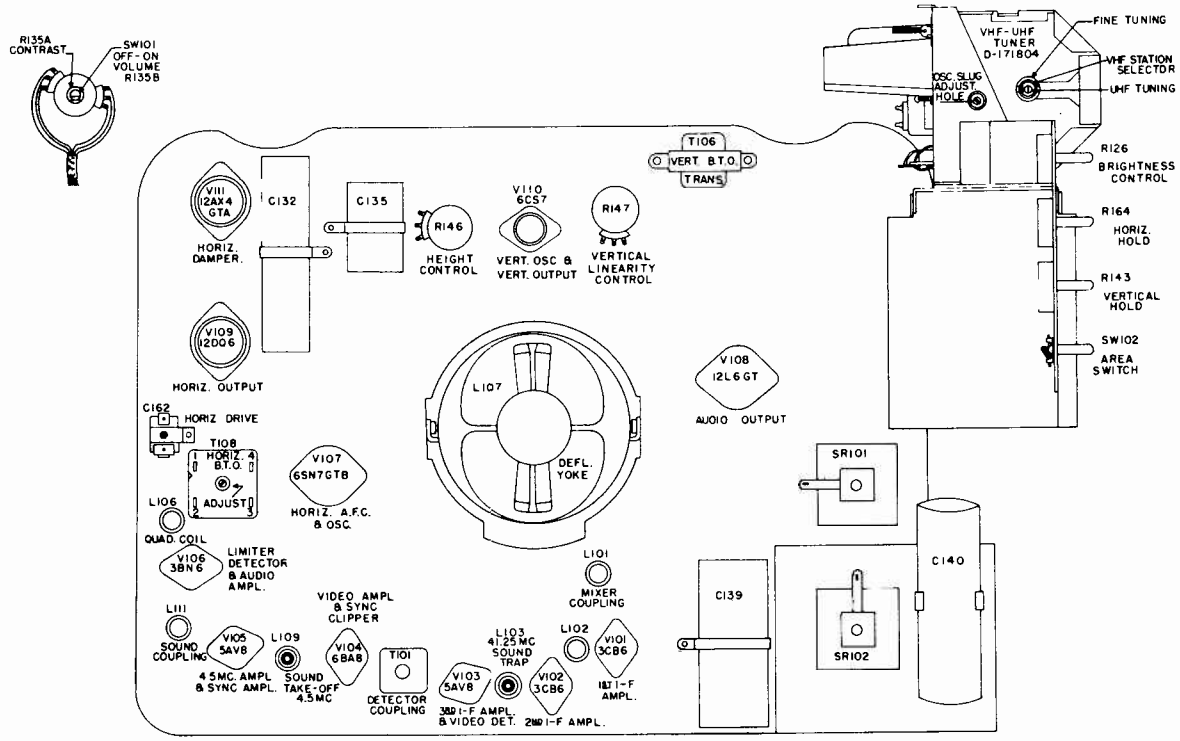

FRONT VIEW OF CHASSIS 488
(Tube and Alignment Locations)

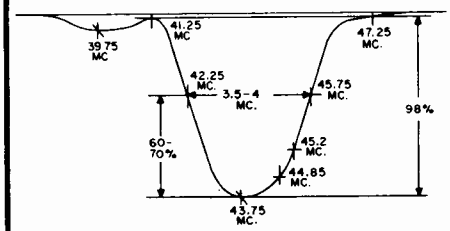

NOMINAL OVERALL I-F RESPONSE CURVE

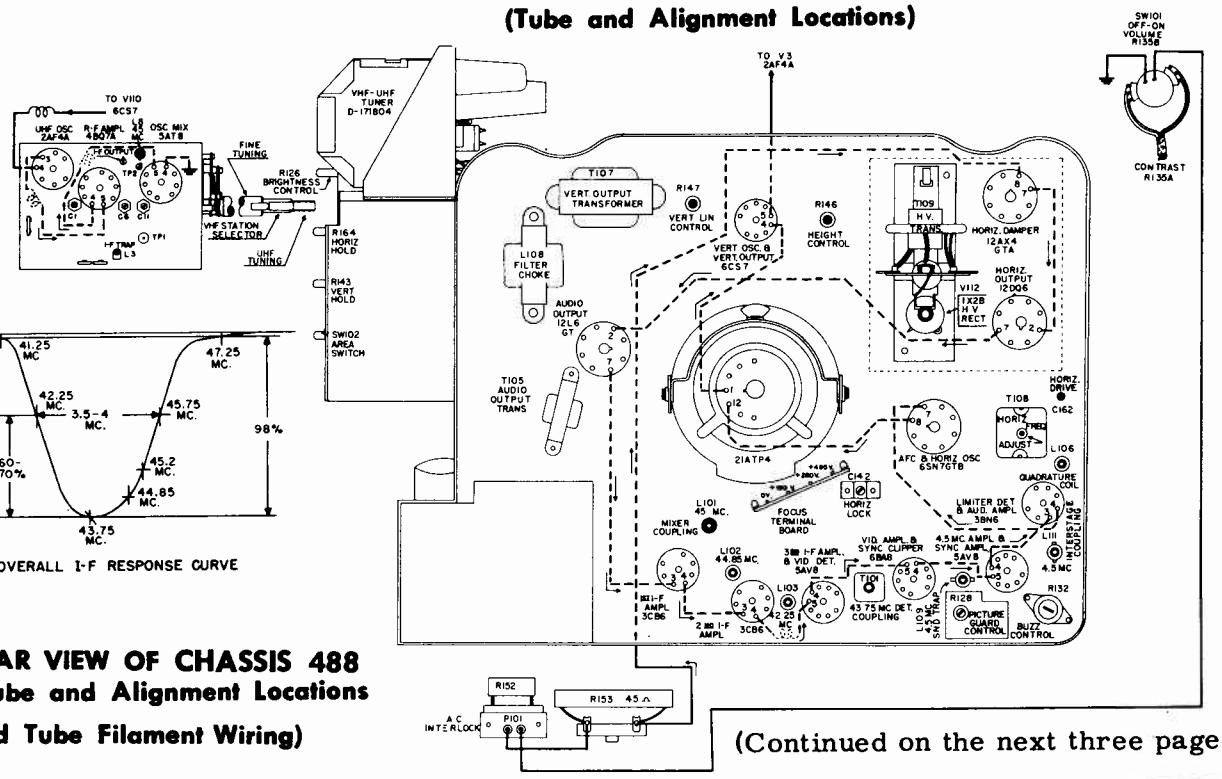

REAR VIEW OF CHASSIS 488
(Tube and Alignment Locations and Tube Filament Wiring)

(Continued on the next three pages)

CROSLEY Chassis 488, Notes and Schematic Diagram

1. All voltages measured with an electronic voltmeter connected from socket lug to chassis. Voltages shown on schematic were taken on a typical chassis. Voltages will vary between chassis and also with input signal and other settings of the controls. Some voltages are variable; voltages shown were measured with a normal picture on the picture tube and the Contrast and Brightness Controls set for 50 volts peak to peak on the cathode (pin 11) of the picture tube. Socket voltage tolerance ±10%. Picture Guard Control (Noise Gate) in open position for these readings. Input signal 3000 microvolts minimum.
2. Supply voltage 117 volts 60 cycle AC.
3. K = 1000.
4. All capacitance values in mmf and all resistance values in ohms unless otherwise noted.
5. Lug 3 connected to boost voltage and lug 3, 8 and 5 connected internally.
6. Outlines of the following transformers and coils are viewed from the wiring side of chassis: L101, L102, L103, L106, L109, L111, T101 and T108.
7. Terminal board located to lower right of deflection yoke allows adjustment of focus voltage to individual tube characteristics.
8. L101 is designed so that an adjacent sound channel trap (Part No. 159061-1) can be added in areas where such interference is prevalent.

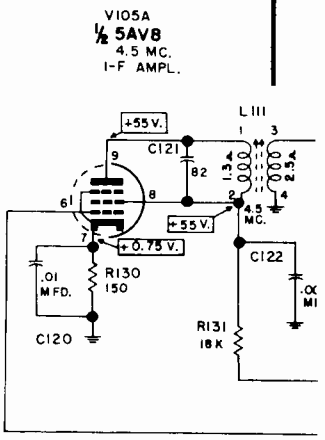

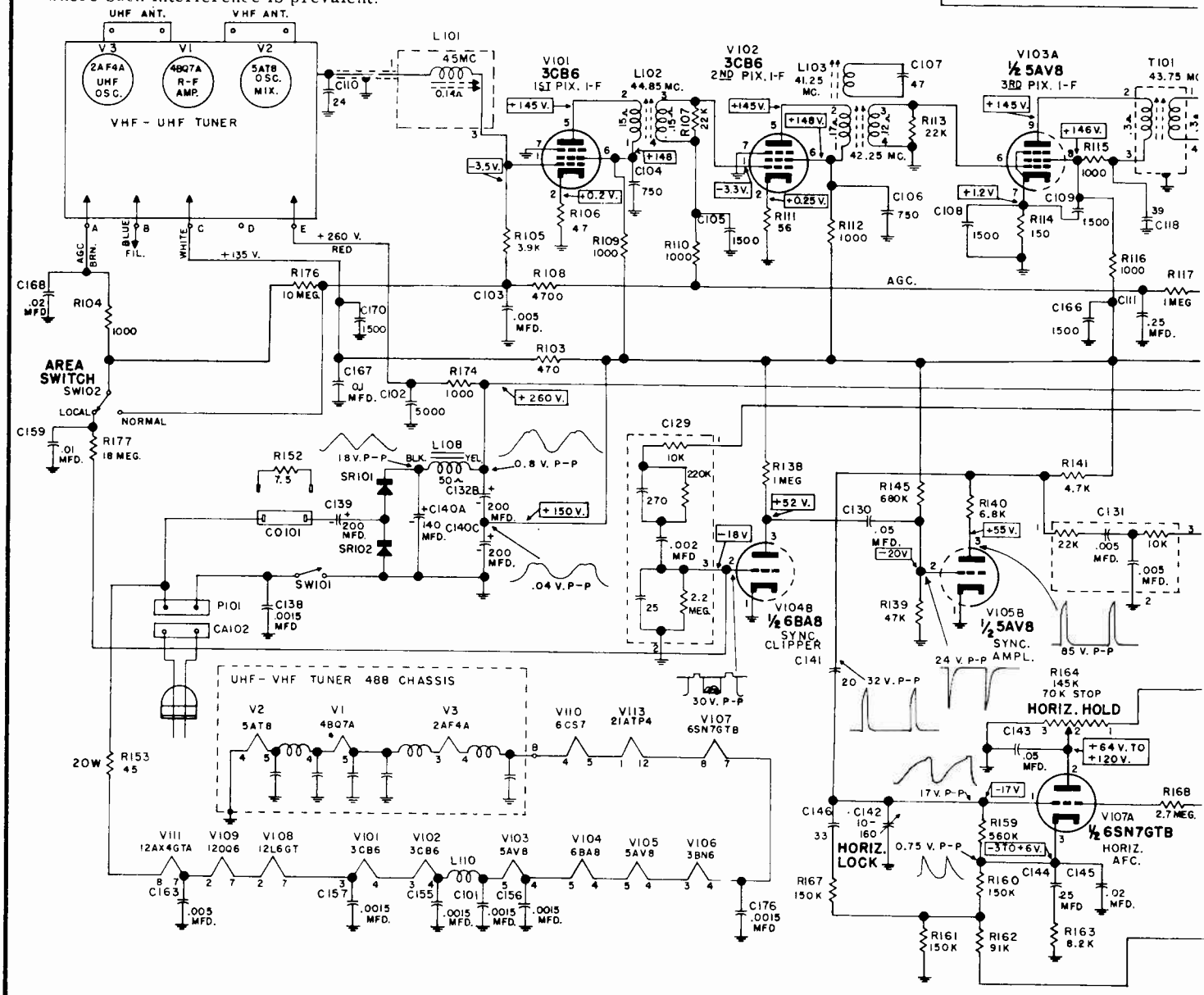

CROSLEY

SCHEMATIC WIRING DIAGRAM CHASSIS 488 CODE B

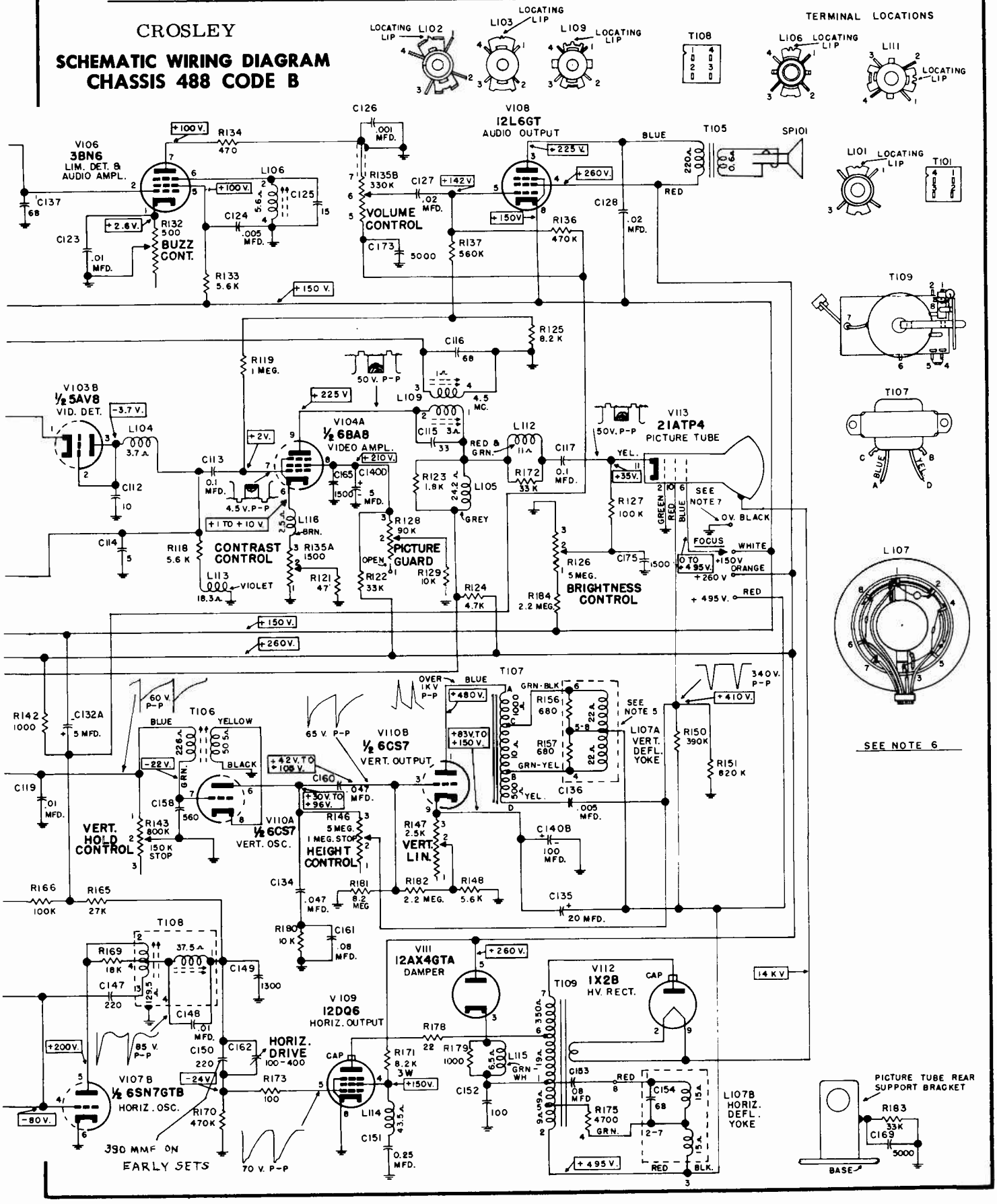

CROSLEY Chassis 488, Alignment Information (Continued)

SOUND ALIGNMENT

Step No.	Channel Set to	Signal Generator Connected to	Scope Connected to	Adjust
1.	Any unused channel	Pin 7 of V-104 and chassis. Set generator for 4.5 mc. 400 cycle AM signal (modulated 30% or greater).	High side (thru detector probe) to cathode of picture tube. Low side of scope to chassis.	Adjust L-109 (rear slug) for minimum 400 cycle indication on scope.

PROCEDURE A (with signal from station)

Step No.	Channel Set to	Adjust	Remarks
1.	Strong signal	L106 for maximum sound output. 2nd peak from open end of coil is the correct peak.	Set Buzz Control approximately 90° from clockwise stop.
2.	Weak signal	L111 and L109 (front slug) for maximum sound output.	If the signal in the area is too strong to obtain these peaks, remove the antenna from the receiver.
3.	Weak signal	Buzz Control (R132) for minimum noise (hash).	This signal should be weak enough to allow noise (hash) to come through with the sound.
4.	Strong signal	L106 again for maximum sound output.	Limit the volume control setting so that this peak can be heard.
5.	Repeat Step 2, 3 & 4.		

NOTE A - In extreme fringe areas, and areas subjected to heavy impulse noise, it may be possible to improve the rejection of noise in the sound by a slight readjustment of the quadrature coil at the time the set is installed. The Picture Guard and Area Switch Controls should be properly adjusted before readjusting the quadrature coil (L106). The adjustment of the quadrature coil is fairly sharp and critical, therefore the slug will usually not require more than 1/8 of a turn from its original setting to obtain best results.

Video I.F. Alignment (with VTVM)

In the I. F. Alignment, limit input of signal generator so that reading on VTVM does not exceed 2 volts d. c. Area Switch in normal position.

Step No.	Connect Signal Generator Through a .01 Capacitor	Signal Gen. Freq. MC.	Connect VTVM	Miscellaneous Connections and Instructions	Adjust
1.	Test Point No. 2. Wire protruding from Tuner nest to 5AT8 (V2).	43.75 mc.	Junction of R118 and C113 and chassis	Connect a 3 volt bias battery, negative lead to junction of R117 and C111, positive lead to chassis.	T101 for maximum indication on meter, limit input to make peak less than 2-volt D. C. on VTVM.
2.	"	42.25 mc.	"	"	L103 (rear slug) for maximum. Use first peak from tinnerman clip end of coil.
3.	"	41.25	"	"	L103 (front slug) for minimum. Input level should be high enough to produce at least .5 volts at null on VTVM. Use first null obtained from end of coilform opposite tinnerman clip.
4.	Repeat steps 2 and 3.				
5.	"	44.85 mc.	"	"	L102 for maximum.
6.	"	45 mc.	"	"	L101 (front slug) for maximum. Use first peak from tinnerman clip end of coil.
		47.25 mc.		Adjacent Sound Channel Trap (L101 rear slug) see Note 1.	
7.	Test Point No. 1.	45 mc.	"	Connect to tuner test point T.P.1. Connect dummy load (consisting of 100 ohm resistor and 100 mmf. capacitor in series) from Pin 1 of V101 to chassis.	L8 on the Tuner for maximum.

Note 1. Adjacent Sound Channel Trap not incorporated on production chassis. To insure proper peak aligning of the I. F. strip where the trap has been added, the rear slug of L101 should be adjusted out to the end of the coil form. In areas where the trap action is needed, turn core in only so far as is necessary to eliminate adjacent sound interference. Turning core in too far may result in deterioration of the picture signal.

The front side of the chassis as referred to below means the side opposite the tubes.
The rear side of the chassis means the side on which the tubes are mounted.

CROSLEY

Chassis 489

Models: BT-12M, BC-12M, BT-12MZ, BC-12MZ, BT-12BZ, BC-12BZ, BC-14M

Chassis 490

Models: BT-13M, BC-13M, BT-13B, BC-13B, BC-15M

The service material below and on the next seven pages is exact for sets listed above. The group of sets listed below is similar to those covered with the main difference in the inclusion of remote tuning arrangement.

Chassis: 493

Models: DT-12M, DC-12M, DT-12B, DC-14M, DC-10M, DC-16B, DC-10B, DC-18N

Chassis: 494

Models: DT-13M, DC-13M, DT-13B, DC-15M, DC-11M, DC-17B, DC-11B, DC-19N

Removing The Picture Tube

1. Remove the chassis from the cabinet.
2. Disconnect the tube socket and remove the Ion Trap Magnet from the neck of the tube. Loosen the wing screw on the deflection yoke bracket.
3. Disconnect the second anode lead from the bell of the tube.
4. Remove hex head bolt retaining metal straps surrounding tube.
5. Remove the two hex head screws from the Off-On Volume, Contrast control shaft support bracket and the two hex head screws from the tuner shaft support bracket. Remove brackets.
6. Remove the nut, metal washer and insulating bushing from the tube support strap in the upper left and right hand corner of the picture tube.
7. Remove the three hex head screws and washers from the tube stops at the upper left and upper right hand corner of the frame.
8. Loosen the nut retaining the tube strap at the lower right and lower left hand corners of the frame. Loosen the three hex head screws from each of the tube stops at the lower right and lower left hand corners of the frame sufficiently enough to allow the stops to move down slightly.

Removing The Chassis From The Cabinet Base

1. Remove the knobs, the cabinet back, the antenna terminal plate, the interlock assembly and the wires from the speaker (or the speaker from the cabinet).
2. Remove the two hex head wood screws from the chassis support bracket on the inside rail at the left rear of cabinet. Remove the hex head wood screw from the chassis support bracket on the inside rail at the right rear of cabinet.
3. Remove the four hex head bolts and lockwashers on the underside of the cabinet along the front and the three self-tapping screws and lockwashers on the underside along the rear.
4. On models equipped with Zoomatenna, remove the wing nut on underside of cabinet and the bracket on the inside bottom of the cabinet and lift Zoomatenna out of the cabinet.
5. Slide chassis back and lift out of cabinet.

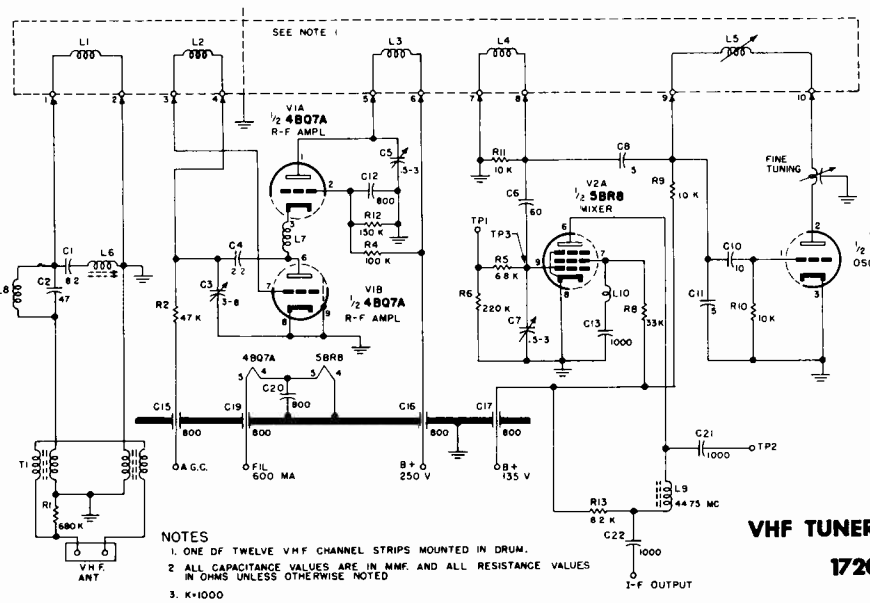

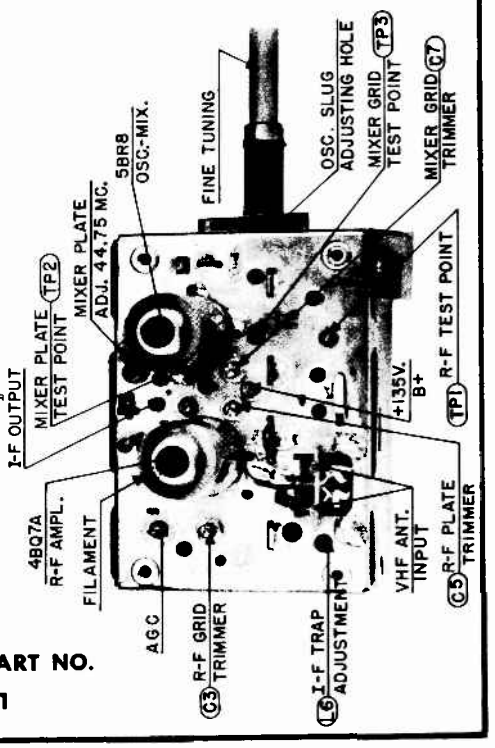

VHF TUNER, PART NO. 172018-1

CROSLEY Chassis 489 and 490, Alignment Information (Continued)

RF AND MIXER ALIGNMENT

VHF TURRET TYPE TUNER

Station Selector	Oscilloscope	Bias	Sweep Generator Connection	Adjust
Chan. #10	High side through a 10,000 ohm resistor to TP1 on Tuner. Ground lead to Tuner Case.	Connect 3 v. negative bias to test point "RF-AGC".	Connect Sweep Generator to Antenna lead-in thru dummy antenna. Set Generator to sweep channel 10 frequencies. Loosely couple Marker Gen. to sweep output cable. Set Marker to either pix or sound carrier for channel #10.	On chassis 489, adjust C3, C5, & C7 to produce a response curve of maximum gain and a similar shape of to R.F. and Mixer Response Curve. On chassis 490, adjust C1, C6 & C11.

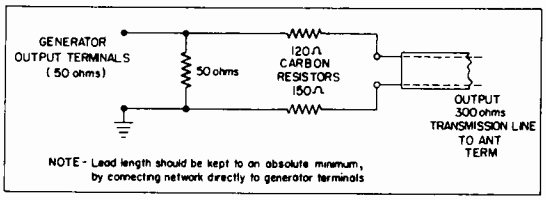

DUMMY ANTENNA

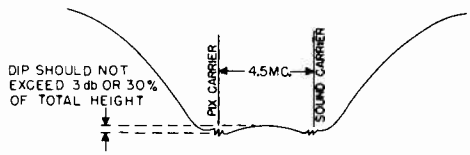

R. F. & MIXER RESPONSE CURVE

Without distributing the R. F. Grid, R. F. plate, and mixer-grid trimmers, check the response on the other VHF TV channels by setting the station selector to the desired channel and changing the frequency of the sweep generator to correspond to the channel being checked. The response curve should be essentially the same on all channels and the markers should fall in similar positions on the response curve. A slight amount of tilt can be tolerated. The amount of tilt indicated by the relative amplitudes of the response curves where the picture and sound markers rest should not exceed 30% of the overall response curve amplitude.

OSCILLATOR ALIGNMENT (using scope)

Oscilloscope	Channel Selector	Bias	Sweep Generator	Marker Generator	Adjust
High side of scope to "VID-OUT" (upper right) on VIDEO-IF Board.	Channel #2	Connect 3 v. negative bias to test point "RF-AGC". Connect 3 v. negative bias to test point "IF-AGC".	Set to channel 2 frequencies. Connect Generator output in series with dummy antenna to antenna lead-in. See sketch of dummy antenna, above.	59.75 Sound Carrier	Channel 2 oscillator slug so that marker falls into bottom of valley on curve (the point corresponding to the 41.25 mc marker as shown on Nominal over-all I.F. Response Curve sketch on page 8.) Be sure that the Fine Tuning Control is set to the center of its range.

Repeat the above procedure for each of the remaining channels, by resetting the sweep generator and the marker generator to the correct frequencies for each channel that is to be adjusted.

ALTERNATE OSCILLATOR ALIGNMENT

In the tuners used on chassis 489 and 490, there is an oscillator adjustment for each channel. When the receiver is installed, the oscillator should be adjusted for each channel on which a station is operating in the area.

Set the Channel Selector to the channel that is to be adjusted. Turn the Fine Tuning control to as near the center of its range as will permit the slug to be adjusted. The oscillator trimmer slug is to the left of the channel selector shaft, and is accessible thru a hole in the front of the tuner after the tuner knobs have been removed. Use a non-metallic screw driver and adjust the oscillator trimmer slug until the proper tuning point is in the center of the Fine Tuning Range. (A long non-metallic screw driver with 12" shaft available under Crosley Part No. 172651-1.)

NOTE:

As the UHF section of the tuner operates at extremely high frequencies, no adjustments should be made on this section. The crystal or the tube may be replaced if the Tuner sensitivity is low. However, there is a possibility of the tuner becoming detuned when replacing the tube with a new one. If this should occur, it is recommended to try several tubes of the same type as originally used in order to find a tube that most nearly matches the characteristics of the original. Likewise when changing the crystal, it is usually best to replace it with the same type removed, trying several crystals and using the one that works best.

CROSLEY Chassis 489 and 490, Alignment Information, Continued

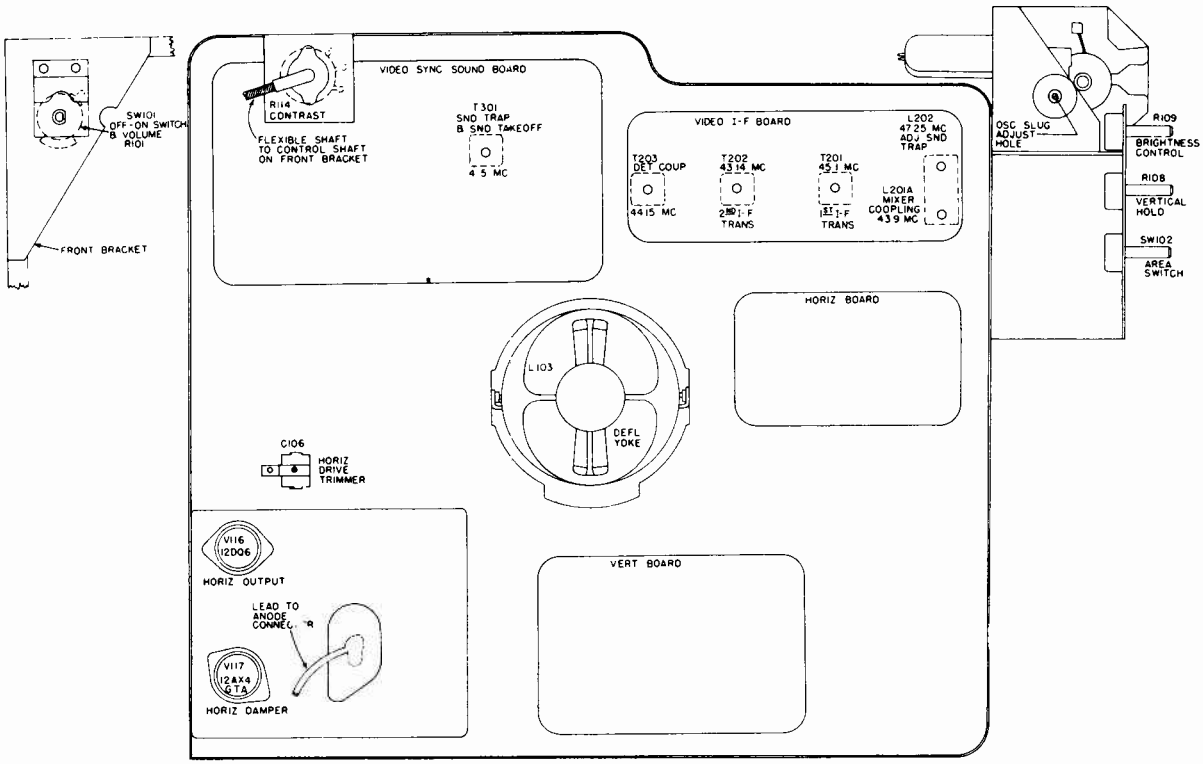

FRONT VIEW OF CHASSIS 489 & 490
(Alignment Locations)

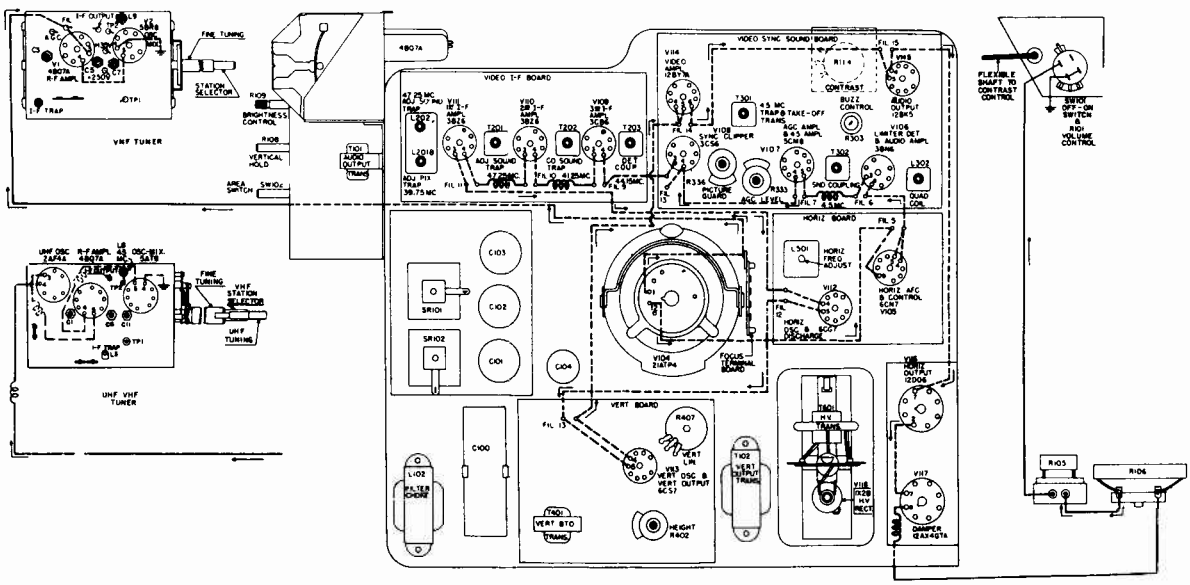

REAR VIEW OF CHASSIS 489 & 490
(Tube and Alignment Locations and Tube Filament Wiring)

CROSLEY (Continued) I. F. ALIGNMENT CHASSIS 489 & 490

All lead connections from the signal marker generator and sweep generator must be shielded. Keep exposed ends and ground leads as short as possible (about one inch). Always locate the ground lead connections as close as possible to their respective "hot" leads in the television receiver chassis. To prevent overloading the receiver circuits, the sweep generator output and signal generator output must be kept low. Turn AGC level control clockwise and contrast counter-clockwise, Noise Gate control fully counter-clockwise and Area Switch in the "Normal" position. Set the fine tuning control to the center of its range, set the tuner to an unused channel, and short the antenna input leads to prevent noise feed-thru.

CAUTION: One side of the chassis is connected to the power line. Therefore, test equipment should not be connected to the receiver unless an isolation transformer is used between the power line and the receiver. DO NOT GROUND THE RECEIVER CHASSIS UNLESS AN ISOLATION TRANSFORMER IS USED.

The two sides of the chassis are referred to as the "wiring side" and the "tube side" of the chassis.

The "bottom slug" is the one closest to the board, and the "top slug" is the one farthest from the board.

Video I.F. Alignment (with VTVM)

Step No.	Connect Signal Generator Through a .01 Capacitor	Signal Generator Freq. M.C.	Connect VTVM	Miscellaneous Connections and Instructions	Adjust
1.	Test Point No. 2 wire protruding from Tuner closest to 5BR8 (V2) on 489 chassis, 5AT8 (V2) on 490 chassis.	44.15 mc.	"VID-OUT" Test Point on VIDEO-IF Board.	Connect 3 v. negative bias battery to "RF-AGC" test point (upper right) on VIDEO-Sync-Sound board. Connect 3 v. negative bias battery to "IF-AGC" test point (upper center) on VIDEO-Sync-Sound board.	T203 for maximum indication on meter, limit input to make peak indication - 2 volts D. C. on VTVM. Use first peak from bottom end of coil.
2.	"	43.14 mc.	"	"	Bottom slug of T202 for maximum. Use first peak from bottom end of coil.
3.	"	41.25 mc.	"	"	Top slug of T202 for minimum. First null when running slug into winding from top end is correct tuning point.
4.	Repeat steps 2 and 3.				
5.	Test Point No. 2.	45.1 mc.	"	"	Bottom slug of T201 for maximum. Use first peak from bottom end of of coil. Do not use more input than required for - 2-volt D.C. indication of VTVM.
6.	"	47.25 mc	"	"	Top slug of T201 for minimum. First null when running slug into winding from top is correct tuning point.
7.	Repeat steps 5 and 6.				
8.	Test Point No. 2.	43.9 mc.	"	"	Bottom slug of L201 for maximum. Use first peak from bottom end of coil.
9.	"	39.75 mc.	"	"	Top slug of L201 for minimum. First null when running slug into winding from top end is correct tuning point.
10.	Test Point No. 2.	47.25 mc.	"	"	Top slug of L202 for minimum. First null when running slug into top is correct tuning point.
11.	Repeat steps 8, 9, and 10.				
12.	Test Point No. 1. See Tube and Alignment Diagram.	44.75 mc.	"	Connect dummy load (consisting of 100 ohm resistor and 100 mmf capacitor in series from grid of V111, pin #1, to chassis. See Note.	Mixer output coil on Tuner for maximum. (L9 on 489; L8 on 490).

NOTE: The point on the component side corresponding to Pin 1 of V111 is the left end of R202 (4.7K ohm resistor above V111). See printed circuit board diagram.

To Check I.F. ALIGNMENT (with scope)

Excessive sweep input will overload the circuit and cause distortion in the wave form. Check for possible overload by temproarily increasing and decreasing the signal input level and noting any change in the wave form. Excessive signal from the marker generator will distort the wave form. Be sure to keep the marker at the minimum usable amplitude.

NOTE: Be sure, when checking the I. F. alignment, to set the channel selector switch to a channel where moving the fine tuning control does not affect the shape or position of the I. F. response curve.

Sweep Generator Connected to	Scope Connected	Bias	Set Sweep Generator	Remarks
High side to ungrounded tube shield V2, 5BR8 on 489 chassis, 5AT8 on 490 chassis. Low side to tuner ground.	Through 60 K ohms to "VID-OUT" test point on VIDEO-IF board (upper right).	Connect negative lead of one 3 v. bias battery to "RF-AGC" test point (upper right) on VIDEO-Sync-Sound board. Connect 3 v. negative bias battery to "IF-AGC" test point (upper center) on VIDEO-Sync-Sound board.	To sweep from 39 to 49 mc.	Provide markers as shown on curve. 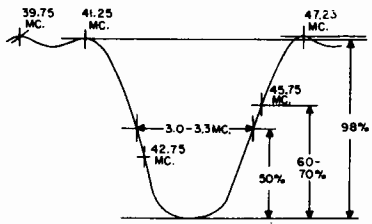 NOMINAL OVERALL I-F RESPONSE CURVE A slight deviation in response is tolerable, but if any great deviation is note, the I. F. stages will have to be realigned.

SOUND ALIGNMENT

The 4.5 mc. trap slug of T301 must be aligned first, regardless of which procedure is used for the remainder of the alignment (Procedure A or B).

Step No.	Channel Set to	Signal Generator Connected to	Scope Connected to	Adjust
1.	Any unused channel	"VID-IN" and chassis. Set generator for 4.5 mc. 400 cycle AM signal (modulated 30% or greater).	High side (thru dectector probe) to T-32. Low side of scope to chassis.	Back out each slug of T301. Then adjust slug on bottom side of T301 until first null is reached, indicated by minimum height pattern on scope screen.

Proceed with the remainder of the Sound Alignment, using either a signal from a TV station as a Procedure A, or alignment equipment as in Procedure B.

CROSLEY (Continued)

PROCEDURE A (with signal from station)

Step No.	Channel Set to	Adjust	Remarks
1.	Strong signal	L302 (Quadrature coil) for maximum sound output. 2nd peak from open end of coil is the correct peak	Set Buzz Control (R303) approximately 90° from clockwise stop.
2.	Weak signal	T302 and T301 top for maximum sound output.	Keep signal below limiting. If the signal in the area is too strong to obtain these peaks, remove the antenna from the receiver.
3.	Weak signal	Buzz Control (R303) for minimum noise hash.	This signal should be weak enough to allow noise (hash) to come thru along with the sound.
4.	Strong signal	L302 (Quadrature coil) for maximum sound output.	Limit the volume control setting so that this peak can be heard.
5.	Weak signal	Repeat steps 2, 3, and 4.	

SEE NOTE

PROCEDURE B (with alignment equipment)

Step No.	Connect Signal Gen.	Signal Gen. Freq. Mc.	Connect Scope	Miscellaneous Instructions	Adjust
1.	"VID-IN"	4.5 mc. FM modulated 400 cps. 7.5 kc. deviation.	Across speaker or dummy load (3.2 ohm.)	Set Buzz Control (R303) to approximately 90° from clockwise stop. Adjust volume control to keep pattern on scope as amplitude increases.	L302 (Quadrature coil) for maximum amplitude on scope. 2nd peak is the correct one from the open end of the coil. Keep signal level high enough to assure limiting.
2.	"	"	"	Set generator attenuator so that FM signal is below the point of limiting.	T302 for maximum amplitude on scope. As the height of the pattern increases, decrease the input control on the generator to keep the signal below limiting.
3.	"	"	"	"	T301 top for maximum peak, keeping signal below limiting by adjusting the generator output.
4.	"	4.5 mc AM modulated 400 cps.	"	Use a high input level on signal generator to insure limiting.	Buzz Control (R303) for null (Minimum 400 cps amplitude on scope).
5.	"	4.5 mc. FM modulated 400 cps. 7.5 kc. deviation.	"	Volume control set at a low level.	Re-peak L302 for maximum 400 cycle indication on scope.
6.	"	Repeat steps 2 and 3, keeping signal below limiting.			

SEE NOTE

In extreme fringe areas, and areas subjected to heavy impulse noise, it may be possible to improve the rejection of noise in the sound by a slight readjustment of the quadrature coil at the time the set is installed. The Picture Guard and Area Switch Controls should be properly adjusted before readjusting the quadrature coil (L302). The adjustment of the quadrature coil is fairly sharp and critical, therefore the slug will usually not require more than 1/8 of a turn from its original setting to obtain best results.

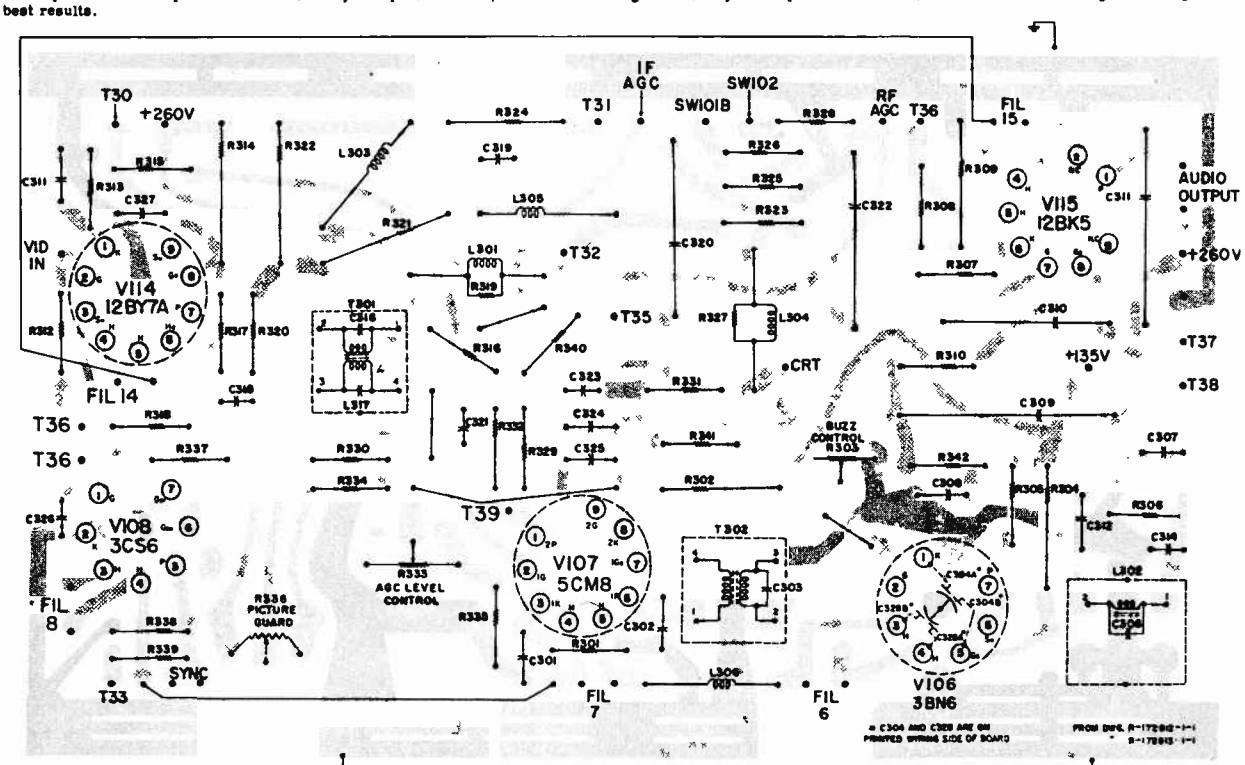

VIDEO-SYNC-SOUND BOARD

CROSLEY

SCHEMATIC WIRING DIAGRAM
CHASSIS 489 CODE C AND CHASSIS 490 CODE B

CODE CHANGES

The first run of chassis are stamped with a Code letter A following the chassis number. Later code letters stamped on the chassis are used to identify certain circuit changes that are not incorporated on earlier production sets. Unless otherwise stated the circuit changes identified by an early code letter are also carried over into the chassis with later code letters. The circuits found in chassis 489 Code C and 490 Code B are shown in the schematic.

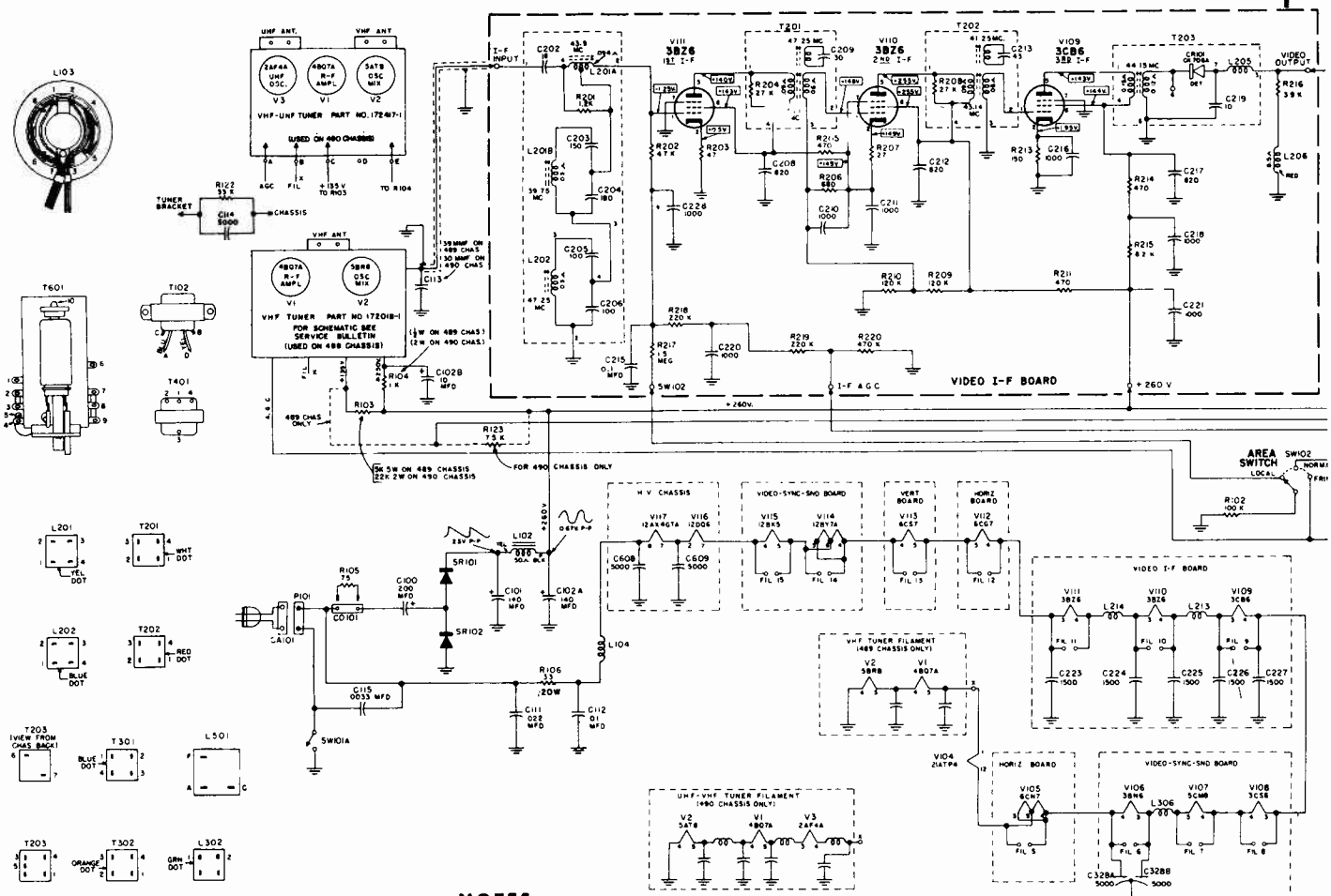

NOTES

1. All voltages measured with an electronic voltmeter connected from socket lug to chassis. Some voltages are variable; also they will vary between chassis, with input signal & other settings of controls. Voltages shown on schematic were taken on a typical chassis with a normal picture on the picture tube, & Contrast & Brightness controls set for 60 volts p-p. on the cathode (pin 11) of the picture tube. Area switch in local position. Input signal 6000 micro-volts minimum for these readings. Socket voltage tolerance 10%.
2. Supply voltage 117 V 60 Cycle A.C.
3. K = 1000.
4. All capacitance values in mmf & all resistance values in ohms unless otherwise noted; tolerance of values is ±10% when not otherwise specified on schematic parts list.
5. Terminals on transformers & coils are viewed from printed wiring side of boards.
6. SW101B is closed when SW101A is open.
7. Jumper will be clipped off on some chassis.
8. On Video-Sync-Sound Board the "260V" Designation to Pin 8, V105, is at +250V Potential. On Vertical Board the "+525V" Designation is at +400V to +500V Potential.

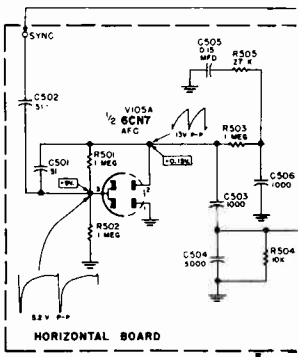

CHASSIS 489 CODE B - To increase vertical stability on weak signals. C-381 was changed from 1500 mmf to .005 MFD, C-323 was changed from 1000 mmf. to .05 MFD, and R383 was changed from 47,000 ohm to 68,000 ohm.

CHASSIS 489 CODE C
490 CODE B - To improve vertical hold range. C402 Vertical Integrator was changed from 490 CODE B Part No. 157812-1 to Part No. 170203-1, and C401 .047 MFD Part No. 39478-28 was added. At the same time an additional change in the Brightness Control Circuit was made to handle slight variations between different manufacturers CRT's. R110 was changed from 680,000 ohm to 220,000 ohm; R111 was changed from 390,000 ohm to 1 megohm. On some chassis the jumper across R110 may be removed to extend the range of the brightness control at its low end. It may be necessary to add or remove this jumper upon replacement of the CRT. The lug marked +135v on the Focus Terminal Board was originally connected to the junction of R110 and R111.

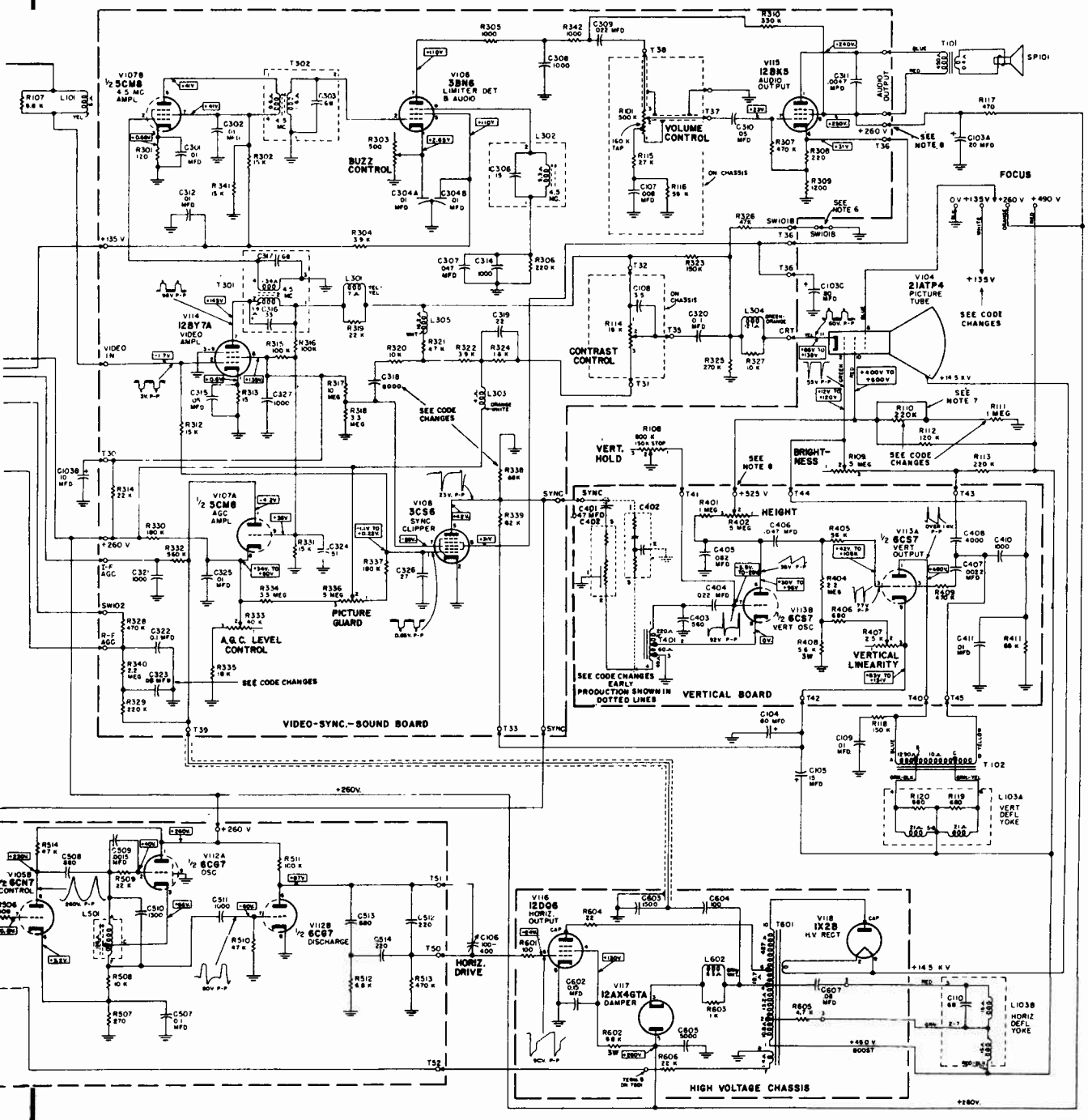

CROSLEY (Continued)

PRINTED CIRCUIT BOARDS CHASSIS 489 & 490

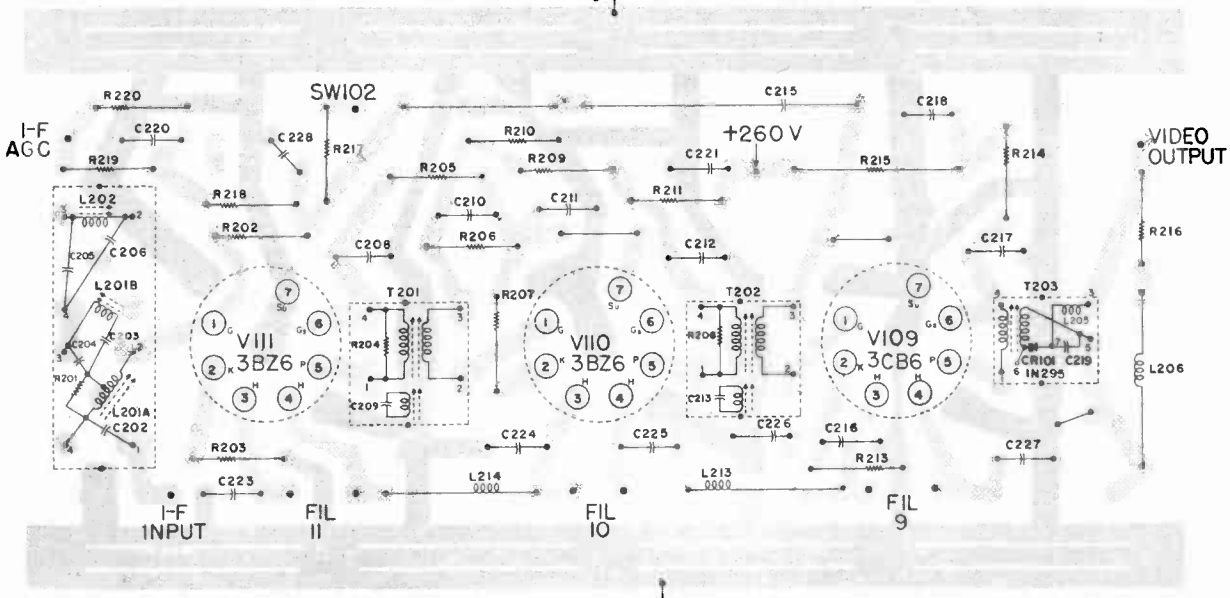

VIDEO I. F. BOARD

The printed circuit boards shown below are viewed from the component side of board. The shaded area represents the printed wiring. Components mounted on the board and other connections are shown in black.

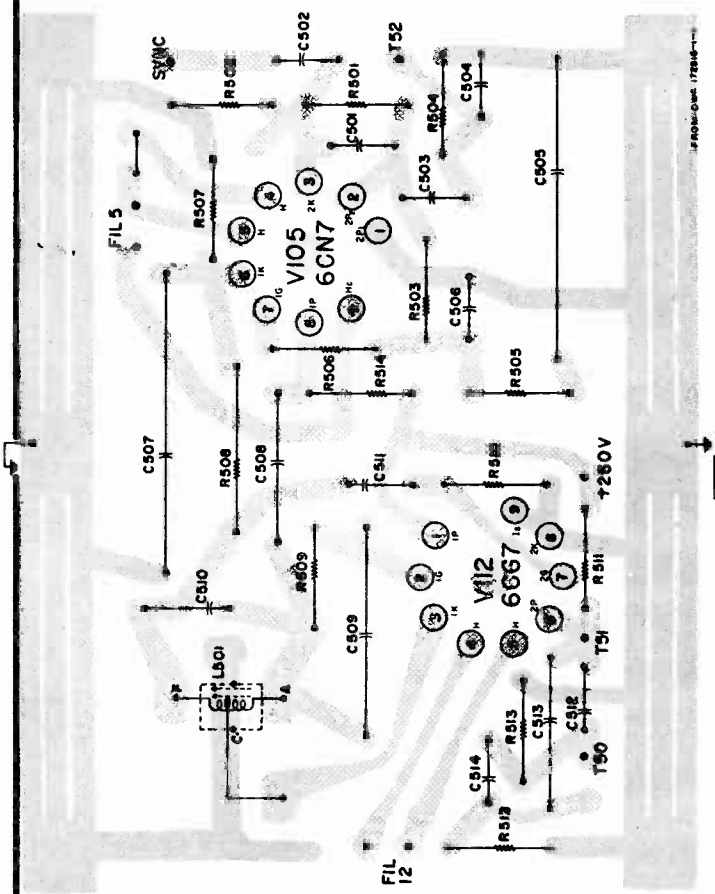

HORIZONTAL BOARD

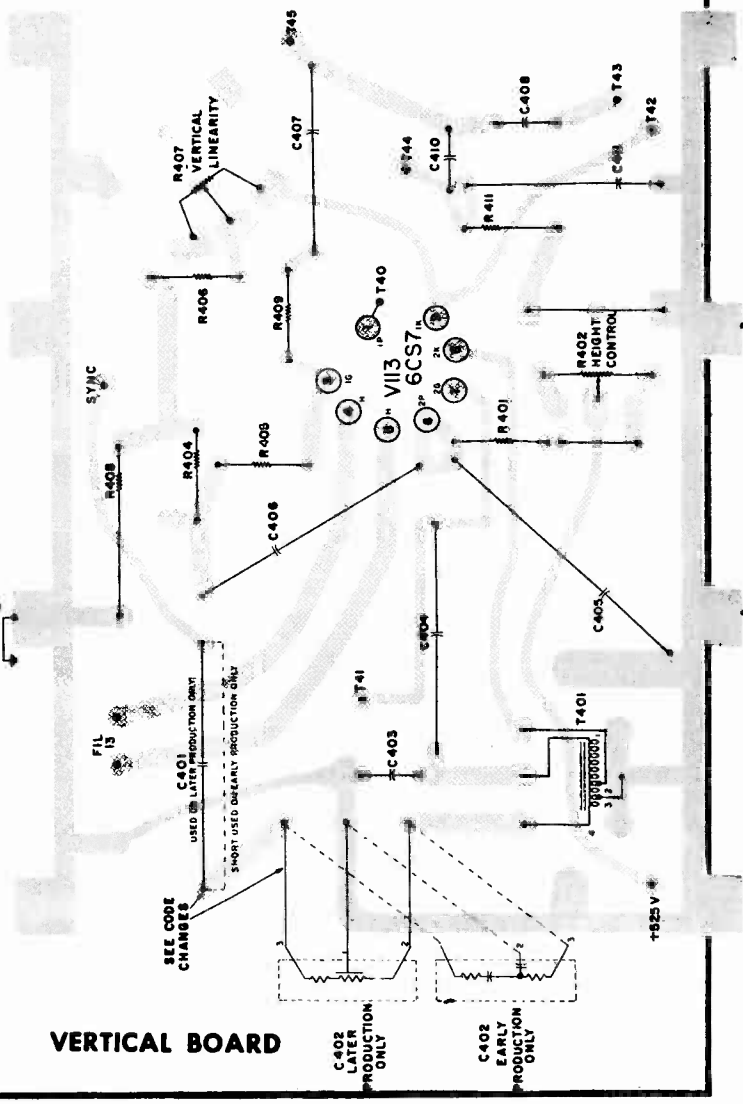

VERTICAL BOARD

DUMONT

RA-380/381 CHASSIS

ALLEN B. DU MONT LABORATORIES, INC.

(material on pages 39 through 42)

VIDEO IF ALIGNMENT RA-380/381

Connect the alignment generator to the tuner look point through probe shown in Figure 1. Connect a -4.5 volts bias supply to P203, the I.F. AGC test point. Turn the Station Selector to channel 3. Set Buzz Control (R328) to mid-range.

Step	Signal Generator Frequency	Signal Generator Connect to	Output Indicator	Connect to	Bias	Adjust
1	43.7 MC No Sweep	Tuner Look Point (see Figure 1) 1	VTVM	Junction of L201, L203 (P204) 1 VTVM	P203 -4.5 volts	Z204 (Top and Bottom) and L136 (Mixer Plate Coil) for maximum negative reading
2	47.25 MC No Sweep	As Above 2	As Above	As Above 2 VTVM	As Above	Z201 (Top) for minimum negative reading
3	45.1 MC No Sweep	As Above 3	As Above	As Above 3 VTVM	As Above	Z203 and Z201 (Bottom) for maximum negative reading .
4	42.5 MC No Sweep	As Above 4	As Above	As Above 4 VTVM	As Above	Z202 for maximum negative reading
5	43.7 MC No Sweep	As Above 5	As Above	As Above 5 VTVM	As Above	L136 (Mixer Plate Coil) for maximum negative reading

SOUND IF ALIGNMENT

6	4.5 MC 400 CPS AM	Pin 7, V204A 6	VTVM thru 470K ohm resistor (see fig. 2)	Pin 2, V204B (P208) 6 VTVM	None Required	L204 (Top) for maximum negative reading
7	4.5 MC 400 CPS AM	As Above 7	Oscillograph through XTAL	CRT Cathode Pin 11 7 XTAL	As Above	L204 (Bottom) for minimum amplitude
8	Strong TV Signal with Teleset tuned for best picture				As Above	Z205 and L208 for maximum audio
9	Very weak TV Signal with Teleset tuned for best picture				As Above	Z205 and L208 for maximum audio

NOTE: After alignment has been completed adjust the Buzz Control (R328) for best sound under signal conditions available.

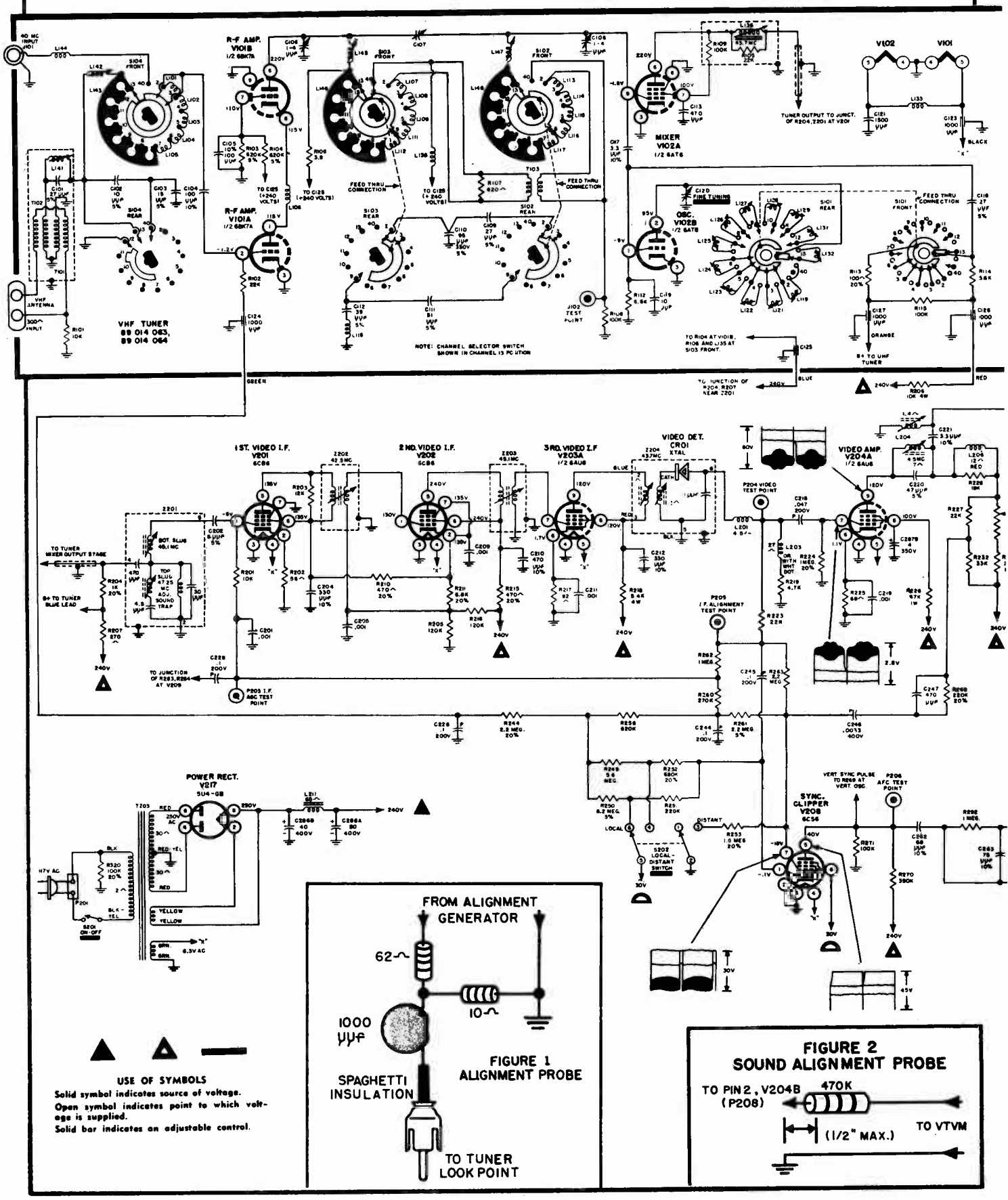
R-F AMP. V101B 1/2 6BK7A
R-F AMP. V101A 1/2 6BK7A
VHF TUNER 89 014 063, 89 014 064
MIXER V102A 1/2 6AT6
OSC. V102B 1/2 6AT6
V102
V101
NOTE: CHANNEL SELECTOR SWITCH SHOWN IN CHANNEL 13 POSITION
1ST. VIDEO I.F. V201 6CB6
2ND. VIDEO I.F. V202 6CB6
3RD. VIDEO I.F. V203A 1/2 6AU6
VIDEO DET. CR01 XTAL
VIDEO AMP. V204A 1/2 6AU6
POWER RECT. V217 5U4-GB
SYNC. CLIPPER V208 6CS6
USE OF SYMBOLS
Solid symbol indicates source of voltage.
Open symbol indicates point to which voltage is supplied.
Solid bar indicates an adjustable control.
FROM ALIGNMENT GENERATOR
62Ω
10Ω
1000 μμf
SPAGHETTI INSULATION
TO TUNER LOOK POINT
FIGURE 1 ALIGNMENT PROBE
FIGURE 2 SOUND ALIGNMENT PROBE
TO PIN 2, V204B (P208)
470K
(1/2" MAX.)
TO VTVM

DUMONT RA-380/381 SCHEMATIC

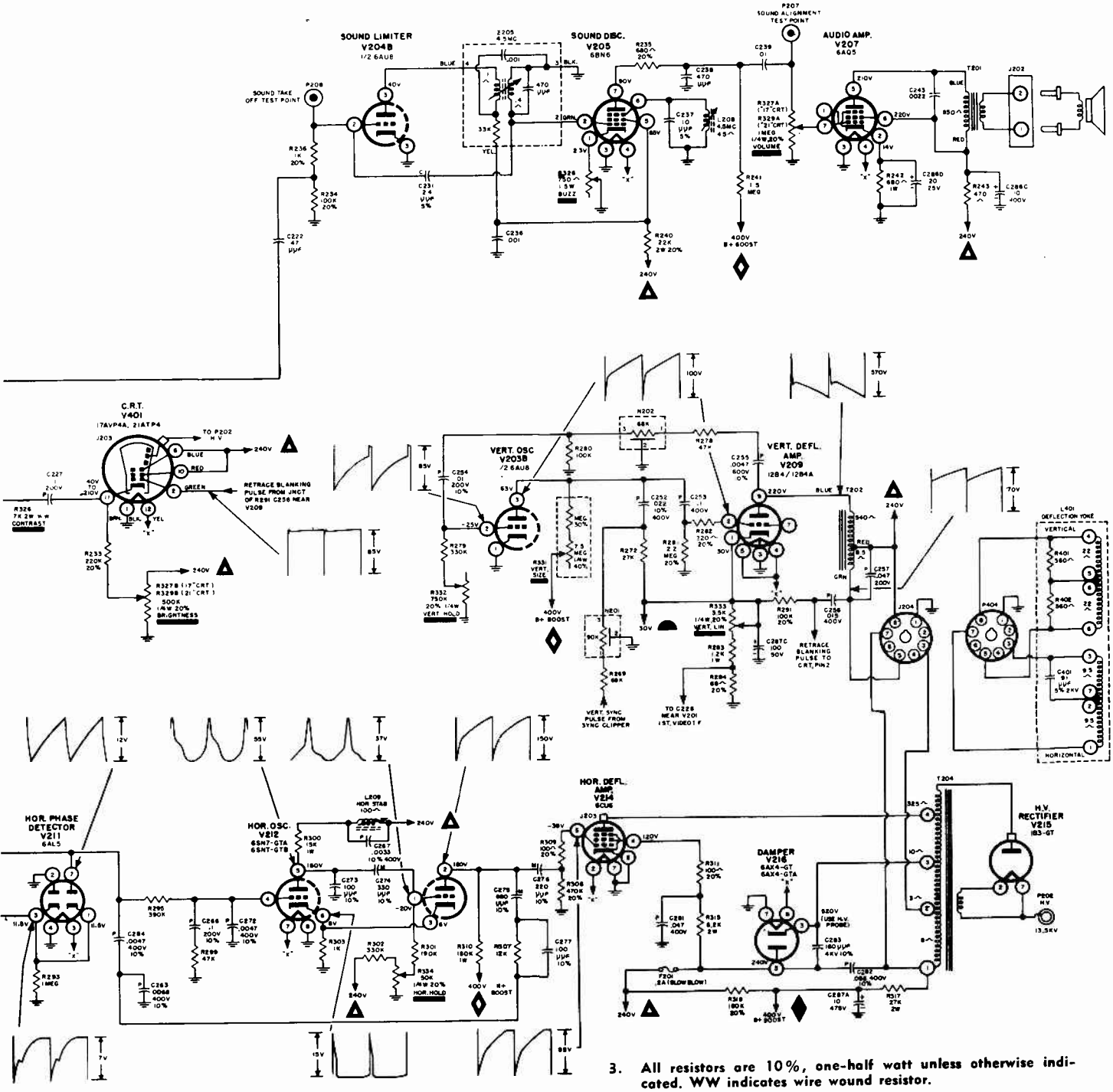

CHASSIS NOTES

1. All waveforms and voltages were taken under operating conditions. The receiver was tuned to an average strength TV signal and the Local-Distant switch was placed in its Local position.
2. Voltages 20% of those shown are normal.
3. All resistors are 10%, one-half watt unless otherwise indicated. WW indicates wire wound resistor.
4. All capacitors are 20%, 500 volts, unless otherwise indicated. All capacitors are ceramic, unless indicated as follows: C-Composition, M-Mica, P-Paper, ±Electrolytic
5. In some chassis C265 is a .0047 mf, 10%, 400 volt capacitor (Part No. 03 140 580).
6. In some chassis a 47K, 10%, ½ watt resistor (Part No. 02 251 970) is connected between pins 5 and 6 of V202.

DUMONT Chassis RA-380, RA-381, Service Information, Continued

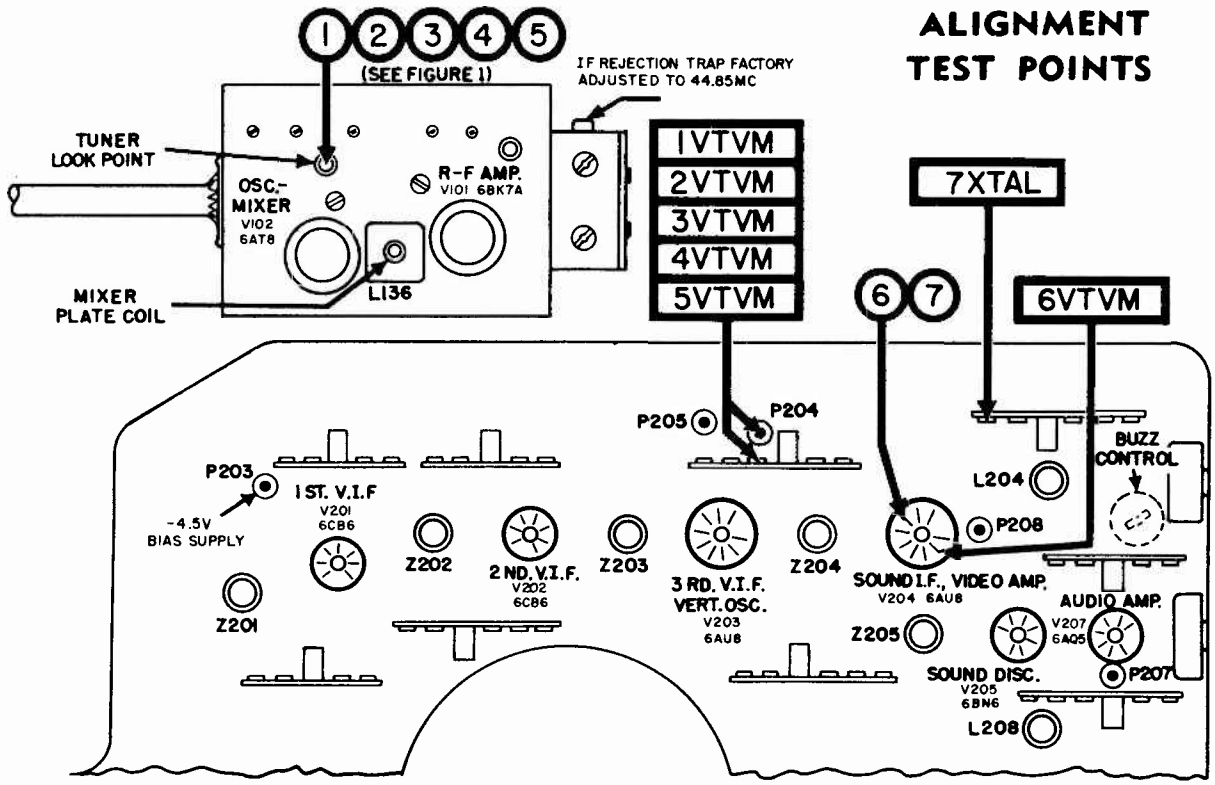

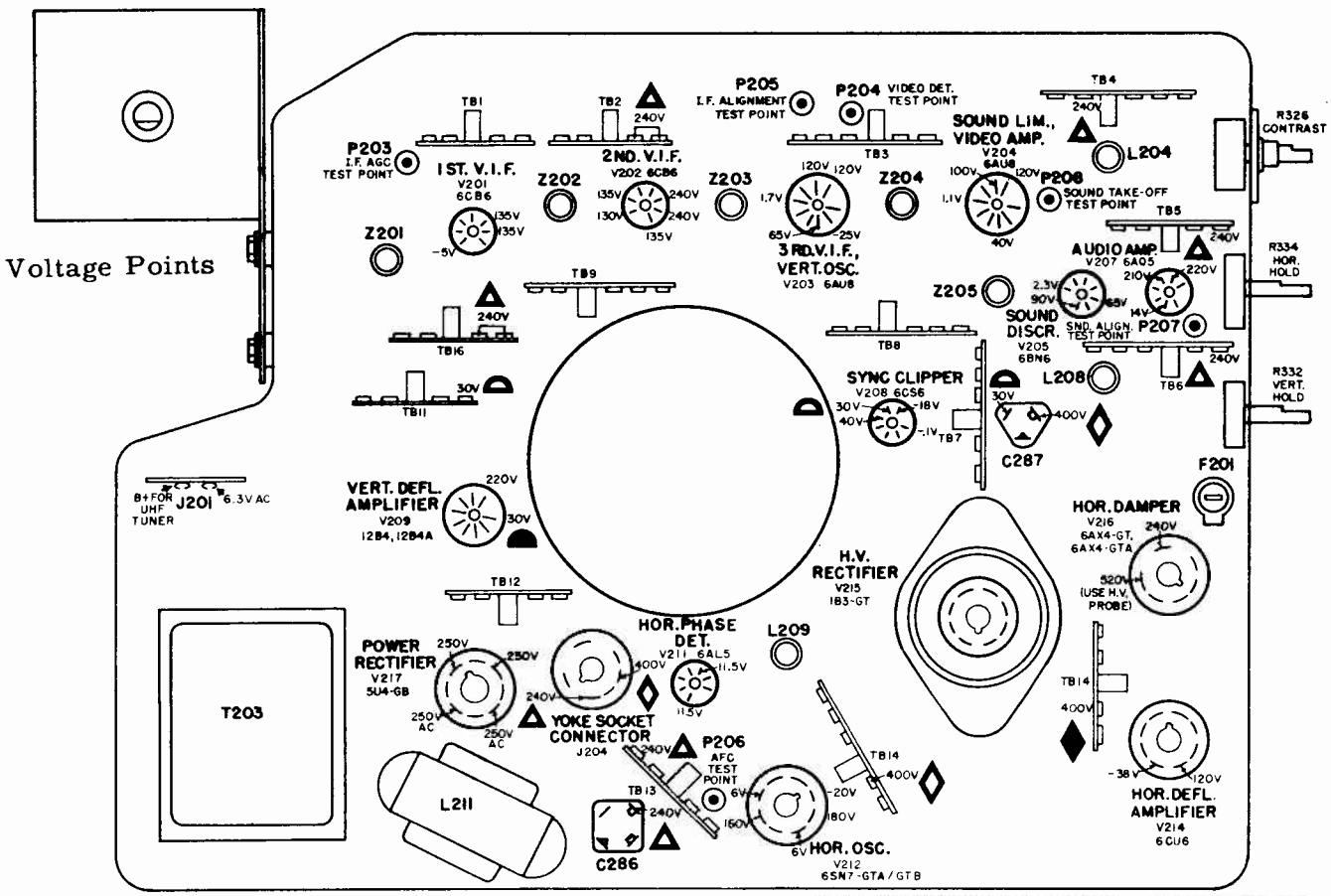

EMERSON RADIO & PHONOGRAPH CORPORATION

TYPE	MODEL NUMBER	TV CHASSIS	KINESCOPE	TUNER	TYPE UHF STRIP
"V.H.F." RECEIVERS	1214, 1216, 1218	120322-V	21ALP4B	470998	"TDB"
	1224, 1226	120329-V	24DP4A		
"UHF"-"VHF" RECEIVERS	1215, 1217, 1219	120323-T	21ALP4-B	470929	No UHF Strips Required
	1225, 1227	120330-T	24DP4A		

(Circuit diagram is on the next two pages, followed by alignment instructions)

TO REMOVE SAFETY GLASS: Models 1214 to 1219 using die cast front.

Remove channel selector and fine tuning knobs. Insert fingers in space formerly occupied by the knobs and pull out the retainer strip. Remove the top and bottom retainer strips and then unscrew the two brackets (on the right hand side) which secure the safety glass to the die cast front. Move the right side of the glass out sufficiently to clear shafts and then slide glass out to the right to remove it from cabinet.

TO REMOVE CHASSIS FROM CABINET: Models 1214 to 1219 using die cast front.

All receiving type tubes and many components may be changed while the chassis is still in the cabinet. If it is necessary to remove the chassis from the cabinet the following general method may be followed:

1. Remove rear cover.
2. Disconnect antenna mounting terminal strip and unsolder speaker leads from printed board.
3. Remove the screws which fasten chassis support brackets to upper and right side of cabinet.
4. Remove screws holding power transformer bracket to bottom of cabinet.
5. Remove the four front corner screws holding die cast front to cabinet brackets.
6. Slide entire die cast assembly, together with chassis, out from the front.

TO REMOVE PICTURE TUBE: Models 1214 to 1219 using die cast front.

1. Remove all knobs.
2. Remove chassis as described above.
3. Carefully place the die cast front on a flat padded surface.
4. Disconnect high voltage lead and kinescope socket. Remove ion trap and width control shim on neck of kinescope.
5. Remove five screws which hold the control panel bracket to the die cast front.
6. Remove the screws (2 per rail) which hold the top, bottom and side rails to the die cast front.
7. Lift chassis assembly up and away from picture tube.
8. Remove four screws which hold the kinescope retaining ring to die cast front.
9. Picture tube may now be removed.
10. To re-install picture tube, reverse the above procedure.

CONDITIONS FOR TAKING VOLTAGE AND RESISTANCE READINGS

1. Antenna disconnected and antenna terminals shorted on tuner and connected to chassis (use short leads).
2. Line voltage 117 volts (Disconnect power for resistance readings).
3. 3 volt bias battery connected to A.G.C. circuit, positive terminal to chassis, negative terminal to junction of R-1, C2, which is connected to junction of R2, C4 (see Fig. 5) BIAS BATTERY USED FOR VOLTAGE READINGS ONLY.
4. All controls in position for normal picture. (Varied when it directly effects reading).
5. All measurements taken with a vacuum tube voltmeter and ohmmeter.
6. All readings listed in tables were taken between points shown and chassis.
7. Resistance readings are given in ohms unless otherwise noted.
8. N.C. denotes no connection.

ALIGNMENT OF HORIZONTAL OSCILLATOR AND A.F.C.

This can be accomplished without removing chassis from cabinet as follows:

1. Tune set to a known good channel. If overload occurs, turn the "local-Distance" control R100 counterclockwise until a steady picture is received.
2. Short phasing coil L-8 by placing a jumper wire across C-54 which is in parallel with L-8. See Figure 7 for location of C-54. Short horizontal oscillator grid pin 7 of V12, 6CG7 to chassis.
3. Set "Horizontal Hold" control to center of its range.
4. Adjust the "Horizontal Balance" control R-77.
5. Remove shorting jumper wire from C-54 and adjust L-8 for same synchronous condition as in step 4 above.
6. Remove short from the horizontal control grid. Horizontal frequency circuits are now properly aligned.

Adjustment of Local-Distance Control (R-100)

Before adjusting, make sure the Horizontal Oscillator and AFC have been properly adjusted (see above).

1. Local Distant Control (R-100)

   Sets are shipped out from the factory with this control set to its "distant" position (maximum clockwise). This position provides best signal to noise ratio (minimum snow) and should not be changed unless overload (streaking in picture, poor sync stability, high distorted contrast, etc.) is noted on the stronger channels. If overload exists, set contrast control to mid position and adjust "Local Distant" control in a counterclockwise direction to a point just under on overload condition.

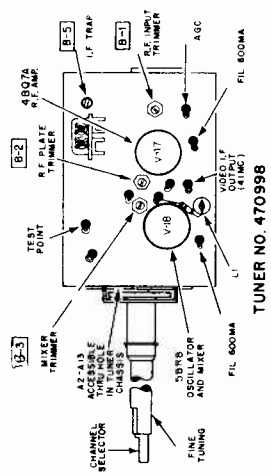

EMERSON

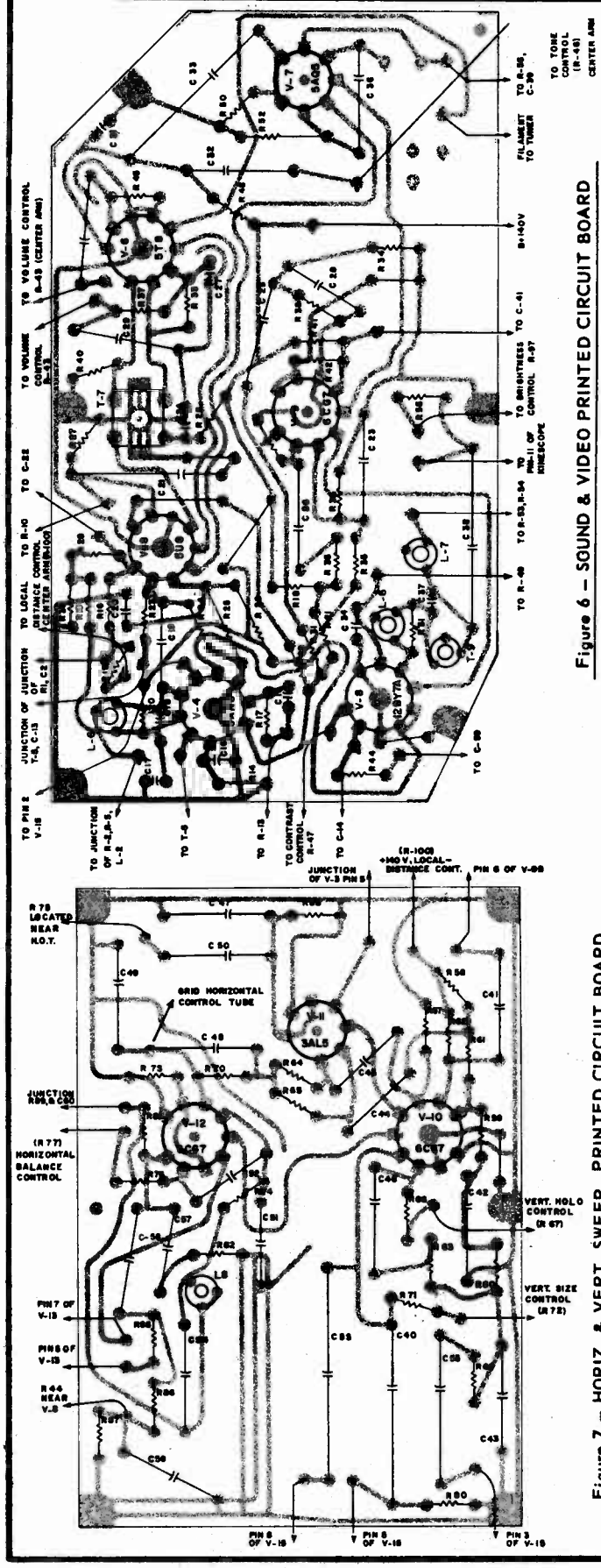

Figure 6 — SOUND & VIDEO PRINTED CIRCUIT BOARD

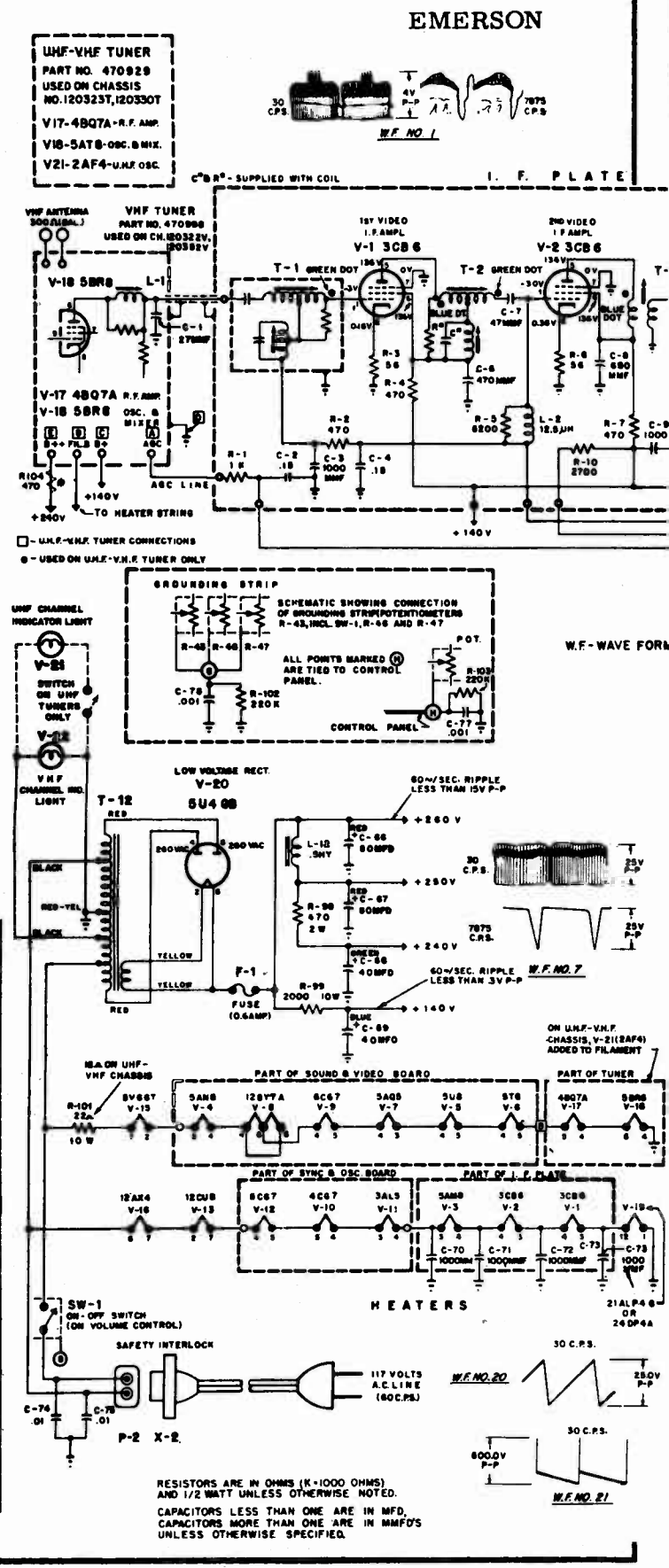

Figure 7 — HORIZ. & VERT. SWEEP PRINTED CIRCUIT BOARD

VOLUME TV-13, ADDITIONAL 1957 TELEVISION SERVICING INFORMATION

EMERSON Chassis 120322V, 120323T, 120329V, 120330T, Schematic Diagram

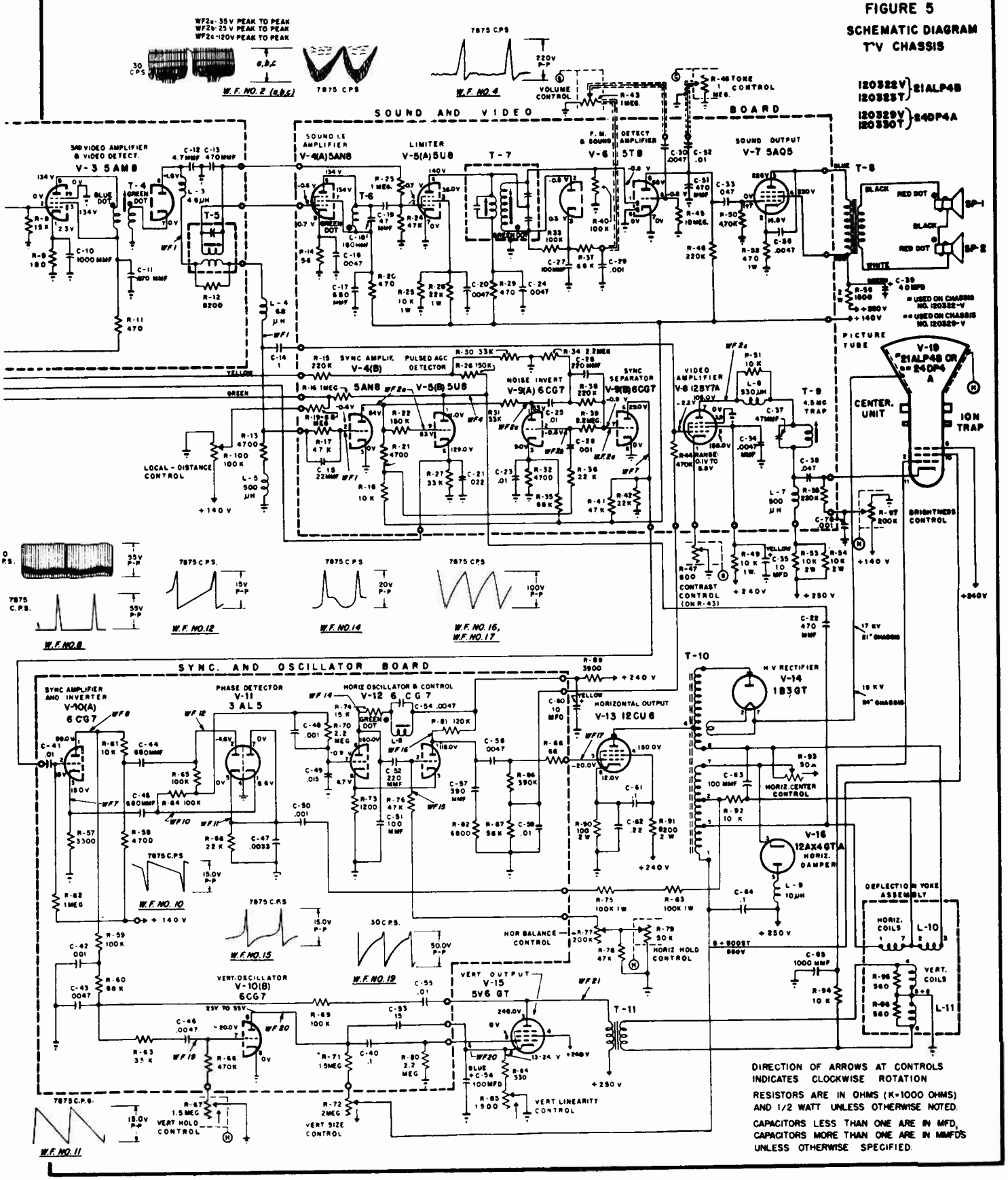

EMERSON CHASSIS 120322V, 120323T, 120329V, 120330T, Alignment Information

VIDEO I.F. ALIGNMENT

ALIGNMENT OF OVERCOUPLED I.F. STAGES:

Short pin 1 of V-2, 3CB6 to chassis. Connect detector probe to pin 5 of V1, 3CB6. Capacity couple sweep generator to tuner mixer plate through shim assembly as described above. Adjust tuner I.F. coil (see Alignment Points Figure 4) for a peak at 45 mc. Adjust 41.25 mc trap at top of T-1 for maximum rejection at 41.25 mc. Adjust bottom of T-1 for a flat response of the 42.6 mc. point, ±10% as compared to the 45 mc. point to obtain response as shown in Fig. 1. If necessary, trim L1 and T1 (top and bottom) to obtain the response as shown in Fig. 1. Disconnect all leads.

ALIGNMENT OF STAGGER I.F. STAGES:

Connect V.T.V.M. probe to junction of R13, R17, L4 with common of V.T.V.M. to chassis. Place -3 volts on AGC line at junction of R2, C4 and R15. Set tuner channel selector on an unused channel. Capacity couple signal generator to grid of 1st Video I.F. (pin 1 of V1, 3CB6). For the following adjustments set the amplitude of the signal generator so as to keep the V.T.V.M. reading across the video detector below 2 volts. Set signal generator to 45. mc. and adjust T-4 for maximum response. (If two peaks accur, adjust for peak with slug furtherest from chassis). With signal generator at 42.5 mc. adjust T-3 for maximum. Turn 47.25 mc. trap on bottom of T-2 can all the way out. Set signal generator to 44. mc. and adjust top for maximum response. With signal generator set at 47.25 mc. adjust the 47.25 mc. trap for minimum response. Use a high output from signal generator so as to obtain visible minimum. Remove signal generator and V.T.V.M. connections. Leave bias on AGC line and channel selector on an unused channel.

OVERALL IF ALIGNMENT:

Connect a 20K Ohm isolating resistor to the oscilloscope probe. Connect this input to a voltage calibrator and adjust the vertical gain of the oscilloscope so that a 2 volt peak to peak input produces an image between two reference points on the vertical scale of the oscilloscope. For the following adjustments, maintain signal level so as to produce an image which will fall approximately between the chosen reference points.

Capacity couple sweep generator to tuner mixer plate through shim assembly as described above. Connect oscilloscope input across video detector load resistor R-13. Adjust sweep generator output to maintain proper vertical size - vertical gain of oscilloscope is left untouched. Use loose coupling for marker generator and keep marker output as low as possible in order not to distort frequency response curve. The overall response curve should be shown as in Fig. 2. The picture carrier 45.75 mc. should be 60% to 70% down from the 45 mc. peak. Tilt in either direction should be less than 25% and the ratio between the peaks and valley should be less than 20%. The 42 mc. point should be in the same line or within 10% above the 45.75 picture carrier. If the overall response does not meet these limits, then trimming adjustments can be made as follows while observing wave form.

Picture carrier position can be varied by adjustment of T-4. Tilt may be adjusted by varying T-2. Band width is adjusted by T-3.

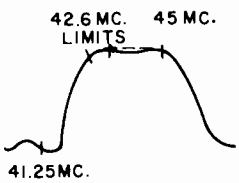

Figure 1 – Overcoupled I.F. Response

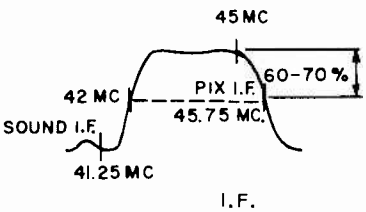

Figure 2 – Overall I.F. Response

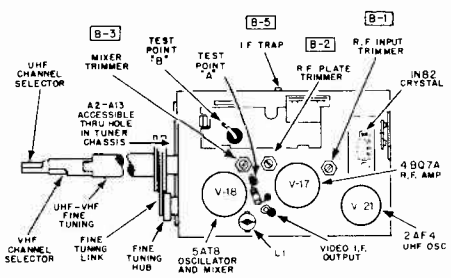

TUNER NO. 470929

Figure 4 – ALIGNMENT POINT DIAGRAM

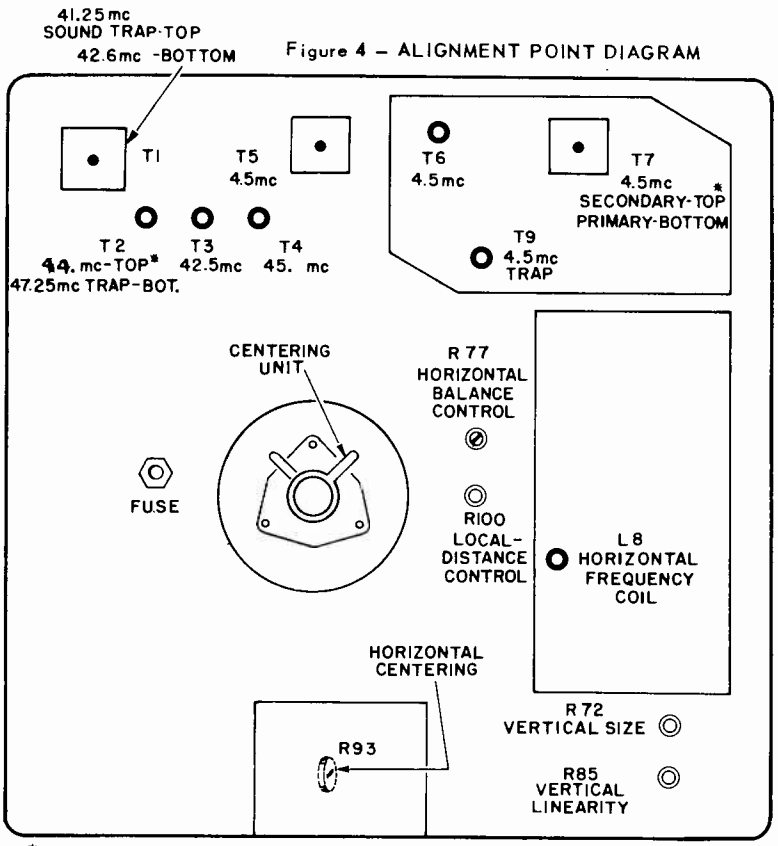

*CHASSIS AS VIEWED FROM REAR REPRESENTS TOP

Emerson Television

MODEL 1232
CHASSIS 120331-H

MODEL 1233
CHASSIS 120332-R

Model 1232, Chassis 120331H, and Model 1233, Chassis 120332R
(Service material below and on the next three pages)

TO REMOVE FRONT MASK (to clean face of picture tube)

Place the receiver back plate on a level surface with the bottom facing you. The back plate is equipped with four small bumpers which permit stable support of the receiver. Remove all knobs. Remove the two screws which are mounted at the bottom lip of the front mask assembly. Lift up the mask assembly on the bottom side. The assembly, which hinges around the top, will then separate completely from the main cabinet.

REMOVAL OF CHASSIS FROM CABINET

1. Remove front mask as described above.
2. Remove four screws which are symmetrically placed at the bottom surface of cabinet.
3. Set the cabinet down in its normal operating position. At the back of the cabinet, remove the built-in antenna leads and the AC interlock. Also remove the three knobs at the back.
4. Remove chassis from the cabinet.

ALIGNMENT OF MIRACLE PICTURE LOCK (Horizontal Oscillator and A.F.C.)

1. Short phasing coil (L-7) by means of a jumper wire.
2. Rotate horizontal hold control (R-43) fully clockwise.
3. Starting with horizontal frequency slug (T-5) all the way "in" looking at rear of chassis, rotate "out" until picture just locks into sync (adjust "out" additional 1/4 turn.
4. Remove short from phase coil and starting with slug all the way "in" adjust "out" until picture almost locks into sync (2-3 diagonal bars).
5. Check for horizontal hold while switching channels. If this is not obtained at extreme clockwise position of horizontal (hold control R-43) turn frequency slug (T-5) "out" slightly until desired results are obtained. If excessive squedging (Christmas Tree effect) is experienced while switching channels, repeat steps No. 1 through No. 5.

VIDEO I.F. ALIGNMENT

1. Connect 3 volt bias to A.G.C. line. Negative terminal to junction R-2, C-4 positive terminal to chassis.
2. Connect I.F. marker generator to floating shield of tuner mixer tube and V.T.V.M. to junction L-4, R-23.
3. Adjust C-1 for maximum capacity.
4. Adjust marker to 45 MC and peak T-2 for maximum (keep signal generator output as low as possible).
5. Adjust marker to 43.5 MC and peak T-1, L-1 and T-11 (Tuner I.F.) for maximum (keep signal generator output as low as possible).
6. Connect an oscilloscope through a 20,000 ohm isolation resistor in place of the V.T.V.M. and connect a sweep generator to floating tube shield of mixer tube along with marker generator. Adjust output of sweep to produce about 2 volts peak to peak at oscilloscope and reduce marker signal so as not to upset the response curve.
7. Adjust marker to 45.75 mc. This marker should appear 60% down with respect to related peak of response curve. If not at 60% adjust C-1. Limits of response curve are 30% tilt and 20% peak to valley ratio. Bandwidth should be approximately 3 mc. wide.

VOLUME TV-13, ADDITIONAL 1957 TELEVISION SERVICING INFORMATION

EMERSON RADIO & PHONO. CORP.
Chassis 120331H, Model 1232,
Chassis 120332R, Model 1233.

PRODUCTION CHANGES

1. To improve vertical and horizontal sync in weak signal areas, a 10 uh R.F. choke (part #705021) has been added in series with plate (pin #5) of 6AX4 horizontal damper tube, V-12.

2. To increase A.C. line filtering, C-65 has been changed from .01 to .0022 mfd., 400 v. An additional capacitor, also .0022 mfd. was added from other side of A.C. line to chassis.

3. To provide more positive vertical lock, R-51 was changed from 100K to 220K ohms, 1/2 watt. If vertical hold control must be set to maximum resistance to lock picture, increase value of R-53 to 820K, 1/2 watt.

4. Some sets are provided with an additional A.C. power line antenna.

5. C-20 changed from .047 mfd. to 0.1 mfd. C-40, .022 mfd., 400 v., changed to same value 600 volt condenser.

6. R-44 changed from 100K to 47K, 1/2 watt. R-69 has been changed from 1.5 ohms, to 1.2 ohms, 1/2 watt, 10% resistor, to prevent blooming. Also 1V2 tube may cause this type of fault.

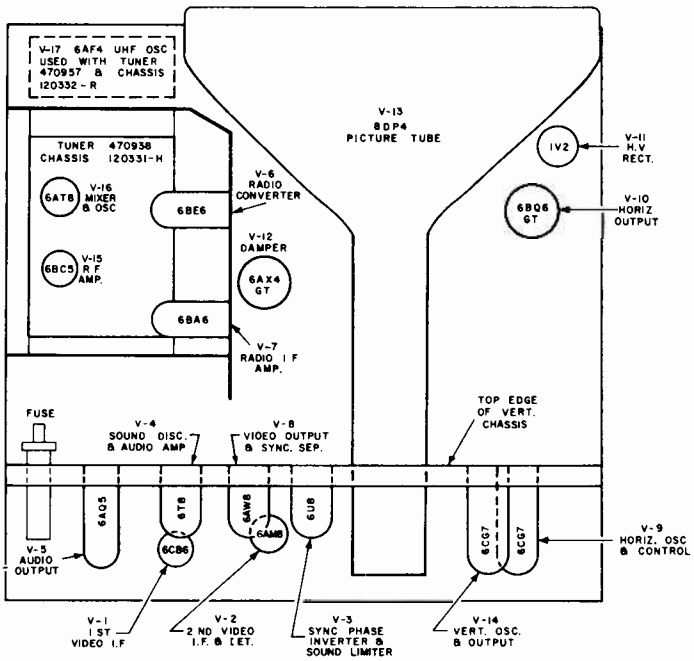

FIG. NO.2 TUBE LOCATION DIAGRAM

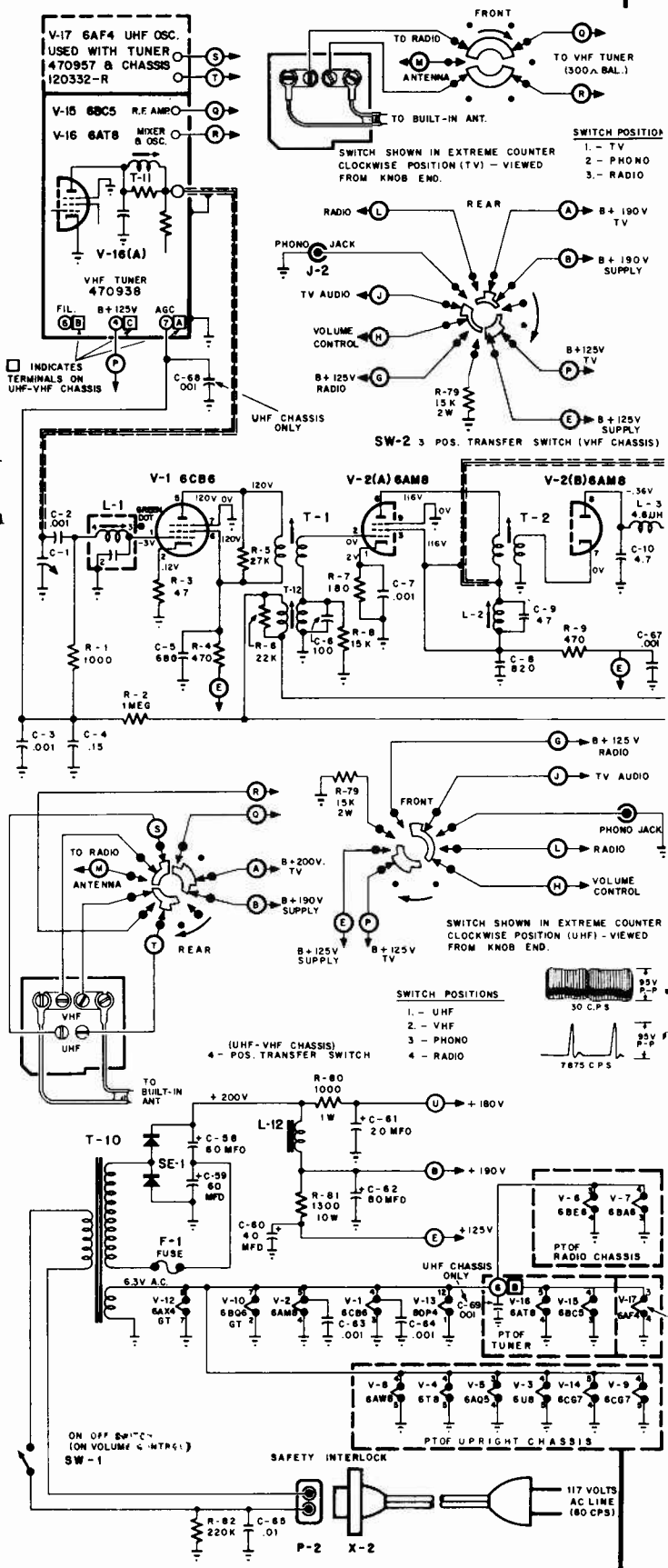

VOLUME TV-13, ADDITIONAL 1957 TELEVISION SERVICING INFORMATION

EMERSON RADIO & PHONO. CORP. Chassis 120331H, 120332R

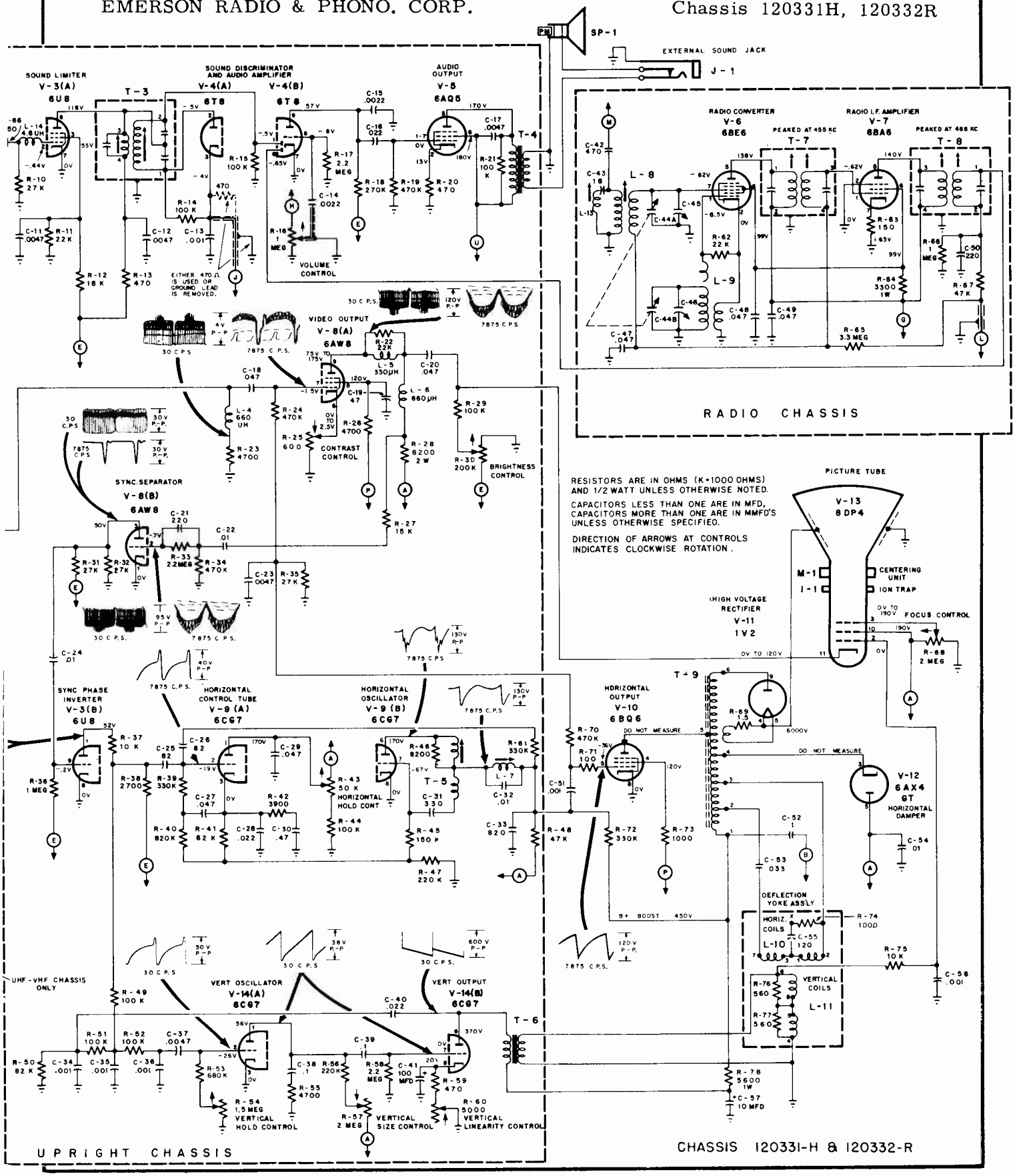

EMERSON Chassis 120331H and 120332R, Alignment Information, Continued

SOUND I.F. ALIGNMENT

1. With antenna loosely coupled to set adjust receiver to a weak signal channel.
2. Place a V.T.V.M. (negative scale) to junction L-14, C-66 and adjust T-12 and L-2 for maximum limiter voltage on V.T.V.M. Amount of input signal should be such that a sharp maximum reading can be obtained.
3. Connect V.T.V.M. to junction R-14, C-13 (negative scale) and detune discriminator (T-3) secondary to produce a maximum negative reading. (Looking at back of set secondary slug is closest to you.)
4. Adjust primary of T-3 for maximum negative reading. (Slug furthest from rear of set).
5. Re-adjust secondary of discriminator T-3 towards original slug position for minimum reading on V.T.V.M. Check audio, if distorted. Repeat steps No. 1-5.

ALIGNMENT OF A.M. RADIO

Since the alignment of the radio section is conventional, it will not be treated in detail. The I.F. frequency is 455 K.C. Location of alignment points are shown in Figure No. 3. With variable fully open adjust oscillator trimmer (C-46) to 1638 k.c. With variable tuned to receive a 600 k.c. signal, adjust antenna slug (L-8) for maximum signal. Variable is then set for 1425 k.c. signal and antenna trimmer (C-45) is adjusted for maximum signal. L-13 is an I.F. trap and is adjusted to minimize a 455 k.c. signal with the variable fully open.

FIELD ALIGNMENT OF PART NO. 470938 TUNER USED IN CHASSIS 120331-H

Ordinarily the only adjustments required in the field are those necessary to compensate for variations in oscillator tube replacements. This can usually be accomplished with the channel No. 13 oscillator adjustment. If individual channel adjustments are necessary, then proceed as follows: (Since this tuner is of the incremental inductance type, all oscillator adjustments should be made commencing with the highest channel and then proceeding to the lower channels.

1. Set channel selector to channel No. 13. Set fine tuning control to electrical center of its range.
2. Adjust channel No. 13 oscillator adjustment, (See Figure No. 1) for best picture and sound. Use a non-metallic screwdriver.
3. Channels No. 2, No. 4 and No. 6 have slug adjustments and should always be adjusted starting with the higher channel. (See Figure No. 1). It is recommended that channels No. 13, No. 6, No. 4 and No. 2 slugs, only, be adjusted in the field in that order when necessary.
4. Channels No. 12 through No. 7 can be adjusted if required by bending the hair pin inductances through the hole provided (See Figure No. 1).
5. Channels No. 3 and No. 5 (split coil windings) should not have to be compressed or separated ordinarily.

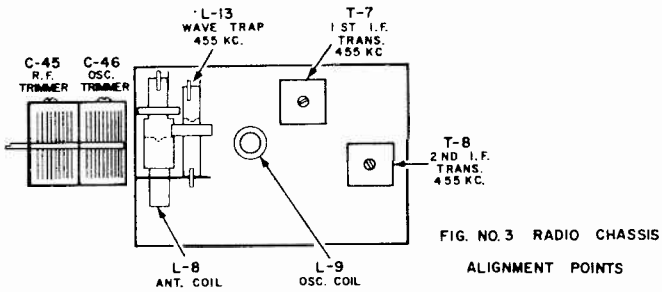

FIG. NO. 3 RADIO CHASSIS ALIGNMENT POINTS

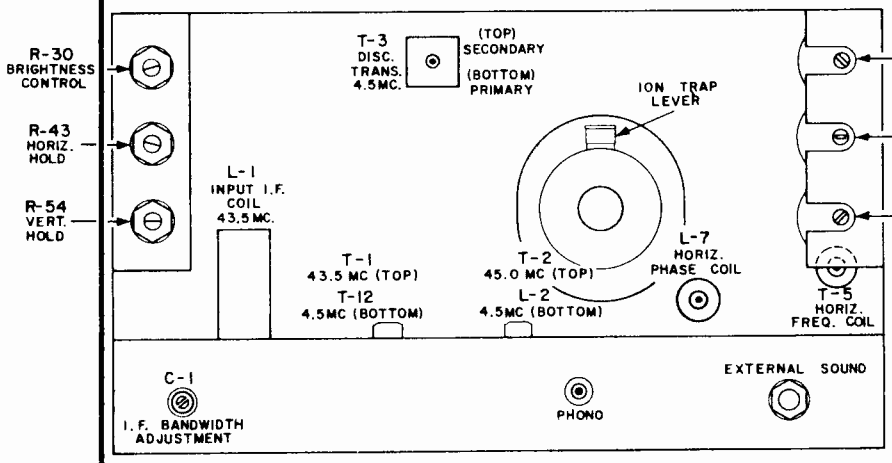

FIG. NO. 4 T.V. CHASSIS ALIGNMENT POINTS

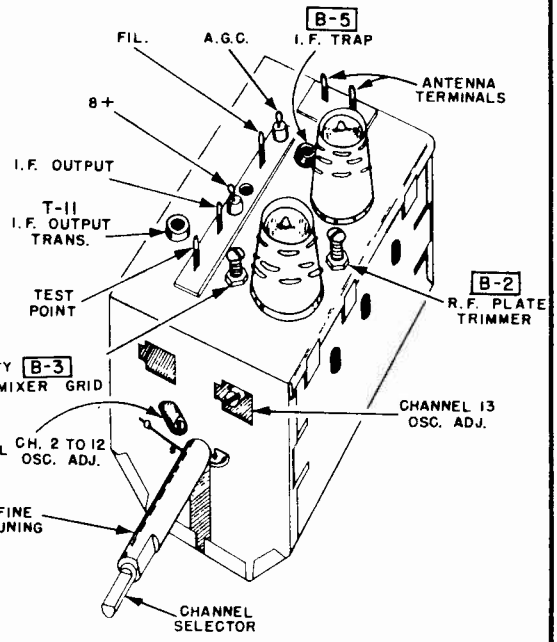

FIG. NO. 1 ALIGNMENT POINTS VHF TUNER 470938

EMERSON RADIO & PHONOGRAPH CORPORATION

TYPE	MODEL NUMBER	TV CHASSIS	TUBE SIZE	TV TUNER
VHF RECEIVERS	1254	120341H	14RP4A	470980
	1264		17AVP4A	
UHF - VHF RECEIVERS	1255	120342R	14RP4A	470987
	1265		17AVP4A	

The service material below and on the next four pages is exact for sets listed above. The circuit diagram marked Figure 4, printed across two pages, is to be used when servicing these sets and the additional group of 21" sets listed in the table directly below. These 21" sets obtain an approximately 10% higher voltage by using a silicon type instead of a selenium rectifier, a few component changes, and a type 12D4 damper tube for V-12 position.

TYPE	MODEL NUMBER	TV CHASSIS	TUBE SIZE	TV TUNER
VHF RECEIVER	2064	120358H	21BTP4 or	470980
UHF – VHF RECEIVERS	2065	120359R	21ALP4B	470987

The additional models listed in the table below are electrically and mechanically similar to the first group of sets, but incorporate a radio tuner and a function switch. A separate diagram exact for these sets and including the radio section (and its alignment) is printed on the sixth page of this section.

TYPE	MODEL NUMBER	TV CHASSIS	KINESCOPE	TV TUNER
VHF RECEIVERS	1258	120347H	14RP4A	470980
	1268		17AVP4A	
UHF-VHF RECEIVERS	1259	120348R	14RP4A	470987
	1269		17AVP4A	

To Remove Picture Tube

1. Remove front mask and safety lens as indicated above.
2. Remove masonite back from set and remove picture tube socket, ion trap, aluminum width shim and yoke clamp from neck of picture tube.
3. Loosen two screws which secure the picture tube to the cabinet.
4. Remove picture tube part way out through front, disconnect high voltage lead from second anode (be sure to discharge high voltage first) thenremove picture tube completely. *Note:* Secure the deflection yoke to prevent its falling when picture tube is removed.

To Remove Chassis From Cabinet

All receiving type tubes and many components may be changed while the chassis is still in the cabinet. If it is necessary to remove the chassis from the cabinet, proceed as follows:

1. Remove knobs.
2. Remove masonite back (disconnect tuner antenna lead from VHF (And UHF if used) antenna terminals.
3. Remove four screws from bottom of cabinet (rear section).
4. Remove picture tube socket, ion trap, loosen deflection yoke clamp and remove aluminum width shim. Disconnect high voltage lead from second anode (discharging high voltage first).
5. Unsolder speaker leads and slide chassis out. The left side of chassis should be lifted slightly to clear tuner shaft when sliding out.

EMERSON Chassis 120341H, 120342R, 120347H, 120348R, 120358H, 120359R, Continued

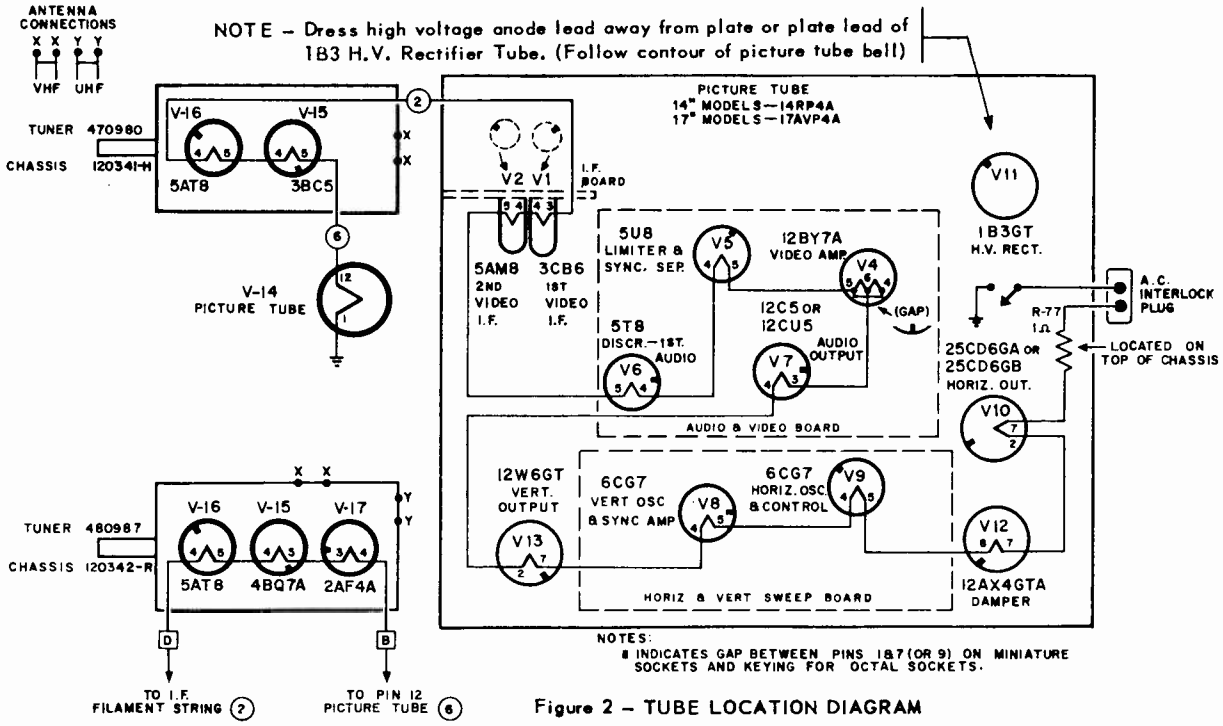

Figure 2 – TUBE LOCATION DIAGRAM

To Remove Front Mask and Safety Lens

1. Remove two screws from bottom front section of cabinet.
2. Pull bottom of front section away from cabinet and then push upward to remove top tabs from the top of the cabinet rear section. *NOTE: Safety lens should be cleaned with a mild detergent. Do not use any abrasive cleaners or chemicals.*

Video I.F. Alignment

1. Connect 3 volt bias to A.G.C. line. Negative terminal to junction R-2, C-4 positive terminal to chassis.
2. Connect I.F. marker generator to floating shield of tuner mixer tube (see Note below) and V.T.V.M. to junction L-9, R-34.
3. Adjust C-1 for maximum capacity.
4. Adjust marker to 45.5 MC and peak T-4 for maximum (keep signal generator output as low as possible.)
5. Adjust marker to 43.5 MC and peak T-2, L-3 and T-1 (Tuner I.F.) for maximum (keep signal generator output as low as possible.)
6. Connect an oscilloscope through a 20,000 ohm isolation resistor in place of the V.T.V.M. and connect a sweep generator to floating tube shield of mixer tube along with marker generator. Adjust output of sweep to produce about 2 volts peak to peak at oscilloscope and reduce marker signal so as not to upset the response curve.
7. Adjust marker to 45.75 MC. This marker should appear 60% down with respect to related peak of response curve. If not at 60% adjust C-1. Limits of response curve are 30% tilt and 20% peak to valley ratio.

NOTE: Part of the procedure calls for use of a "floating" shield over the mixer tube of the tuner. The tube shields now used in the tuner cannot be removed from their mounts. Instead of a "floating" shield the following method is used.

Take a thin piece of copper or brass foil ½" by 2" and paste on to a thin piece of onion skin insulation. The insulation should extend about 1/8" beyond the two long sides and one short side while the foil should extend beyond the insulation on the other short side.

The shim assembly is then slipped in lengthwise to fit between the mixer tube and its shield with the metal foil facing the tube. The short side with the extended insulation is placed towards chassis while the side with the foil extending beyond the insulation is connected to the sweep generator. The shim may now be rotated for maximum coupling as observed on the oscilloscope.

Sound I.F. Alignment

1. With antenna loosely coupled to set adjust receiver to a weak signal channel.
2. Place a V.T.V.M. (negative scale) to junction L-8, R-16 and adjust T-10 and L-4 for maximum limiter voltage on V.T.V.M. Amount of input signal should be such that a sharp maximum reading can be obtained.
3. Connect V.T.V.M. to junction R-21, C-23 (negative scale) and detune discriminator (T-5) secondary to produce a maximum negative reading. (Looking at top of chassis secondary slug is closest to you.)
4. Adjust primary of T-5 for maximum negative reading.
5. Re-adjust secondary of discriminator T-5 towards original slug position for minimum reading on V.T.V.M. Check audio, if distorted. Repeat steps No. 1-5.

EMERSON Chassis 120341H, 120342R, 120347H, 120348R, 120358H, 120359R, Continued

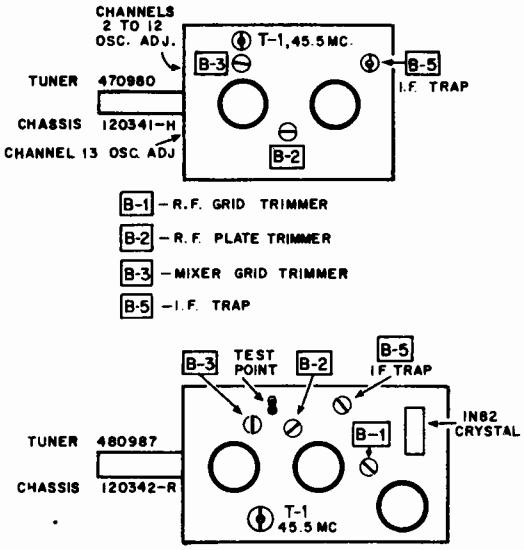

Figure 3 – ALIGNMENT POINT DIAGRAM

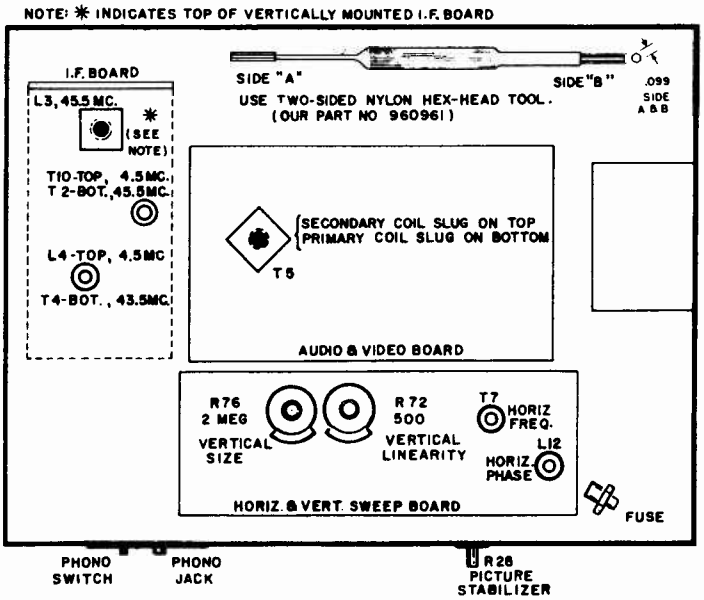

Alignment of Miracle Picture Lock (Horizontal Oscillator and A.F.C.)

This can be accomplished without removing chassis from cabinet as follows:

1. Turn picture stabilizer (R-28) fully clockwise (minimum resistance) and tune set to a known good channel.
2. Short phasing coil (L-12) by a jumper wire across C-45, .01 mfd capacitor.
3. Rotate horizontal hold control (R-57) fully clockwise (looking from front of set.)
4. Starting with horizontal frequency slug (T-7) all the way "out" (towards you looking at top of chassis), rotate "in" until picture just locks into sync. Then, turn slug in about 1/2 turn more.
5. Remove short from phase coil and starting with slug all the way "out", adjust "in" until picture almost locks into sync (3-4 diagonal bars).
6. Turn horizontal hold (R-57) to counterclockwise position to lock picture "in", then turn horizontal hold back to full clockwise position. If picture falls out of sync, adjust frequency coil slug (T-7)slightly.
7. Check for horizontal hold while switching channels. If this is not obtained at extreme clockwise position of horizontal hold control, turn frequency slug T-7 "in" slightly until desired results are obtained. If excessive squedging (Christmas Tree effect) is experienced while switching channels, readjust phase coil slightly. Check to make sure no horizontal bending is introduced at top of picture.

* NOTE: T-7 and L-12 must be adjusted with a hex head adjustment tool and not a screwdriver.

Adjustment of Picture Stabilizer (R-28)

For local signals, this control (R-28) should be set to its extreme clockwise position(minimum resistance).

If sync improvement is required in electrically noisy areas, the picture stabilizer control (R-28) is turned in a counterclockwise direction until the best sync stability is obtained. Be sure to check all channels for sync instability, since a compromise setting of R-28 might be necessary.

Horizontal Size Adjustment

Width is controlled by an aluminum shim inserted between the picture tube neck and the yoke. To reduce width the shim is placed further inside the yoke and vice-versa to increase width. Then recheck ion trap setting.

To Eliminate Barkhausen and/or Snivets

We have found that under certain conditions some 25CD6-GA, GB tubes cause "snivets" in the picture. To eliminate this possibility so that servicemen will not have to hand pick 25CD6-GA, GB tubes, we are using an ion type of trap around the top portion of the 25CD6-GA, GB tube. These are factory adjusted and should not usually require any further adjustment. This trap can be adjusted in the field if need be, simply by turning around tube until snivets and/or Barkhausen is eliminated. If necessary, turn the trap over and rotate once again. Make sure you check all channels received in that area.

Tuner Descriptions

VHF tuner #470980, used in chassis 120341H is a 12 position, series filament, incremental inductance type tuner. Switching is accomplished by means of 4 ganged wafer sections in a removeable turret with two circular rows of contacts on one side of each section. A single stationary spring contact is used for each circular row of contacts.

EMERSON Chassis 120341H and 120342R Schematic Diagram

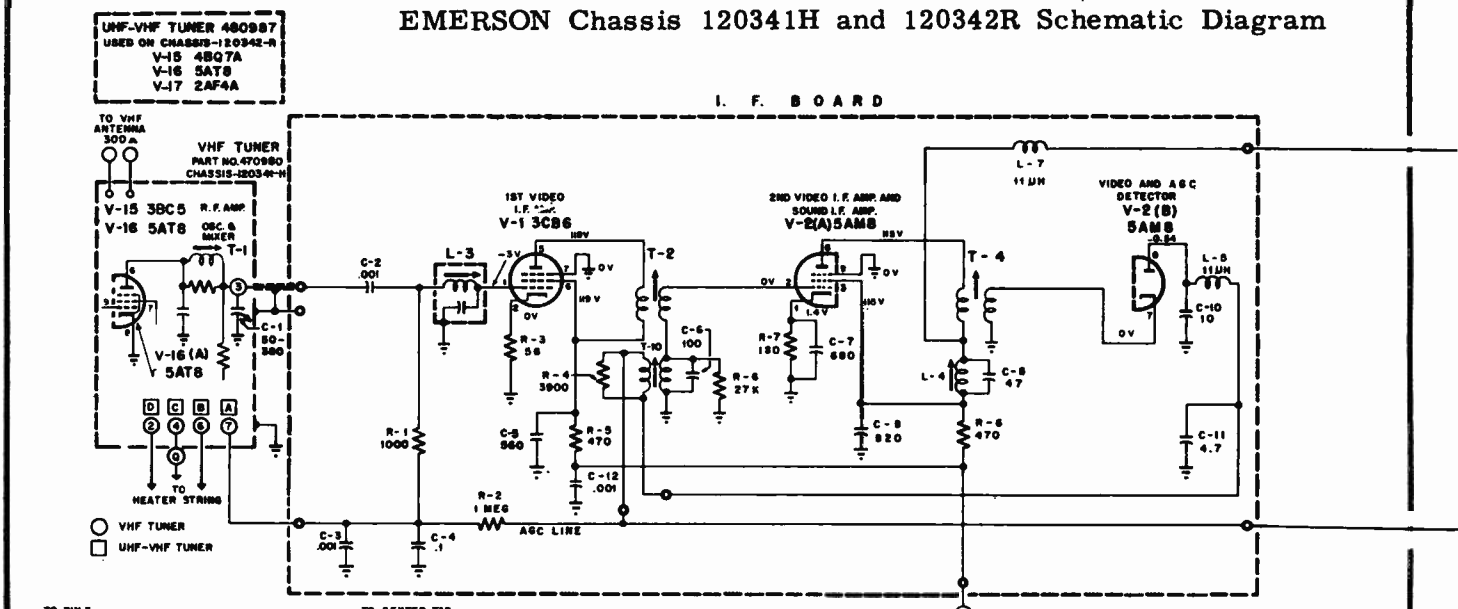

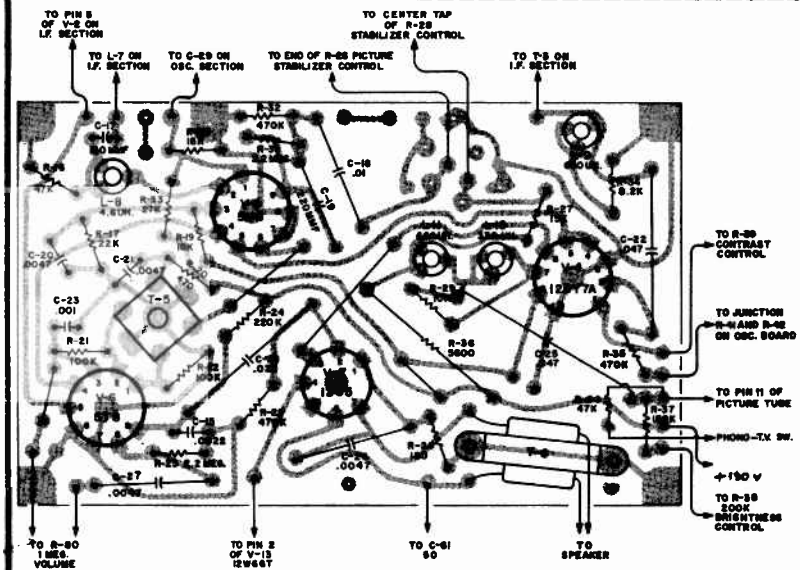

Figure 6 – SOUND & VIDEO PRINTED CIRCUIT BOARD

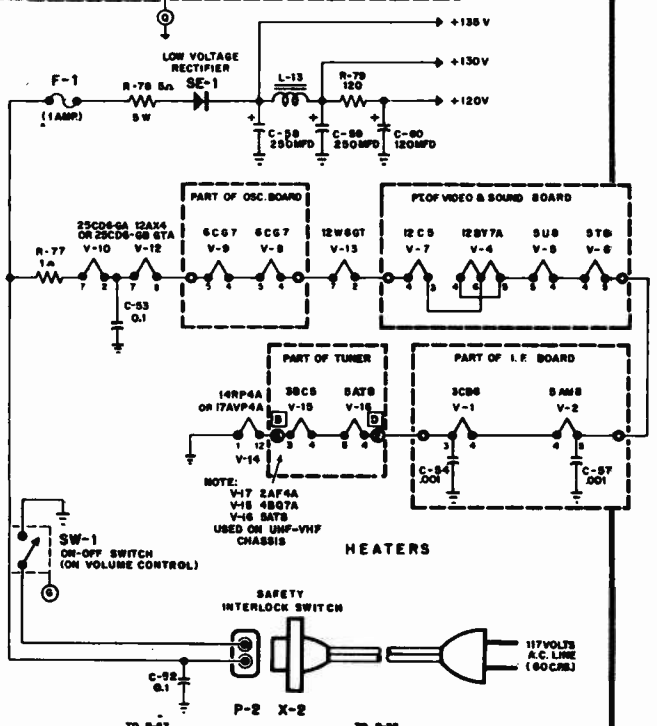

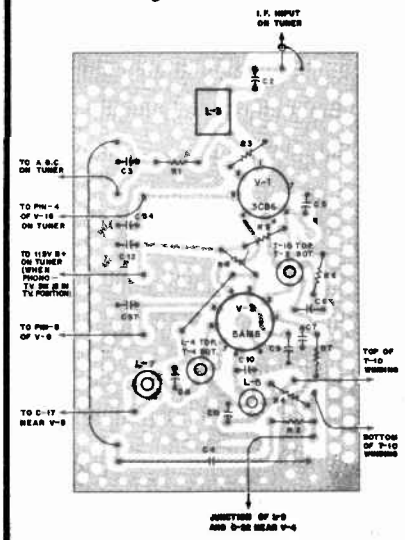

Figure 5 – VIDEO SOUND I.F.

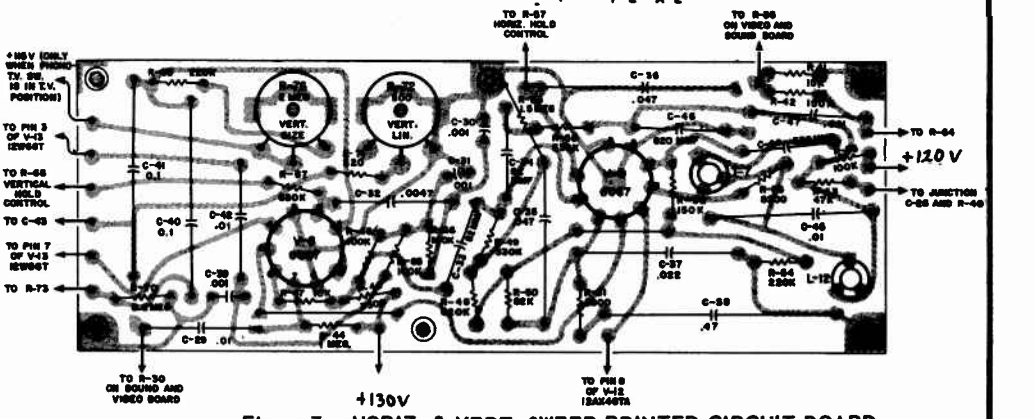

Figure 7 – HORIZ. & VERT. SWEEP PRINTED CIRCUIT BOARD

EMERSON Chassis 120341H and 120342R Schematic Diagram

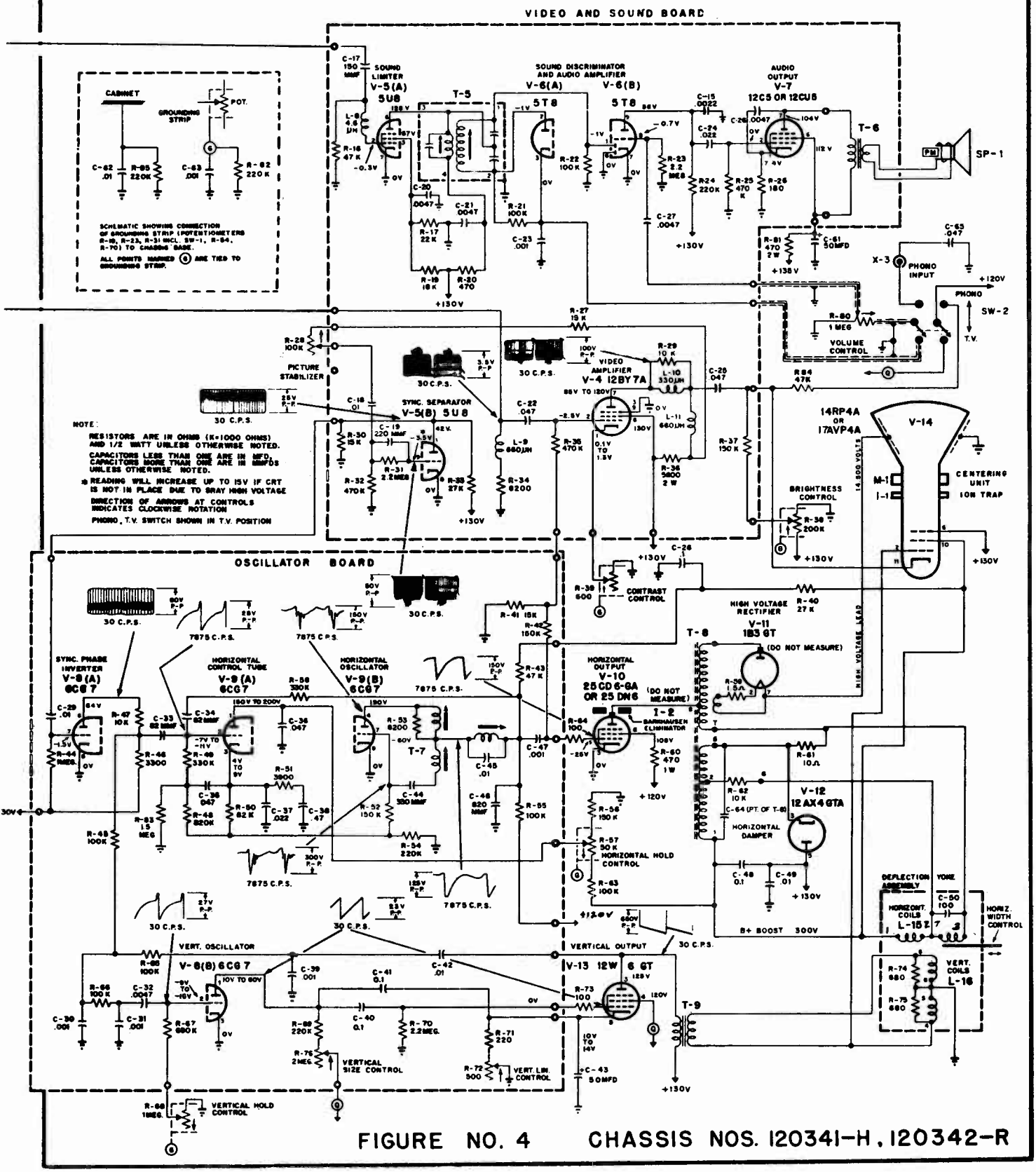

FIGURE NO. 4 CHASSIS NOS. 120341-H, 120342-R

EMERSON Chassis 120347H, Models 1258, 1268, and Chassis 120348R, Models 1259, 1269.

These sets are similar to Chassis 120341H and 120342R, but include a radio tuner and a function switch. Use the circuit on this page and balance of service data on previous pages.

RADIO CHASSIS-TUBE LOCATION AND ALIGNMENT POINTS

ALIGNMENT OF A.M. RADIO

Since the alignment of the radio section is conventional, it will not be treated in detail. The I.F. frequency is 455 k.c. With variable fully open, adjust oscillator trimmer (C-56) to 1638 k.c. With variable tuned to receive a 600 k.c. signal, adjust antenna slug (L-17) for maximum signal. Variable is then set for 1425 k.c. signal and antenna trimmer (C-55) is adjusted for maximum signal. L-19 is an I.F. trap and is adjusted to minimize a 455 k.c. signal with the variable fully open.

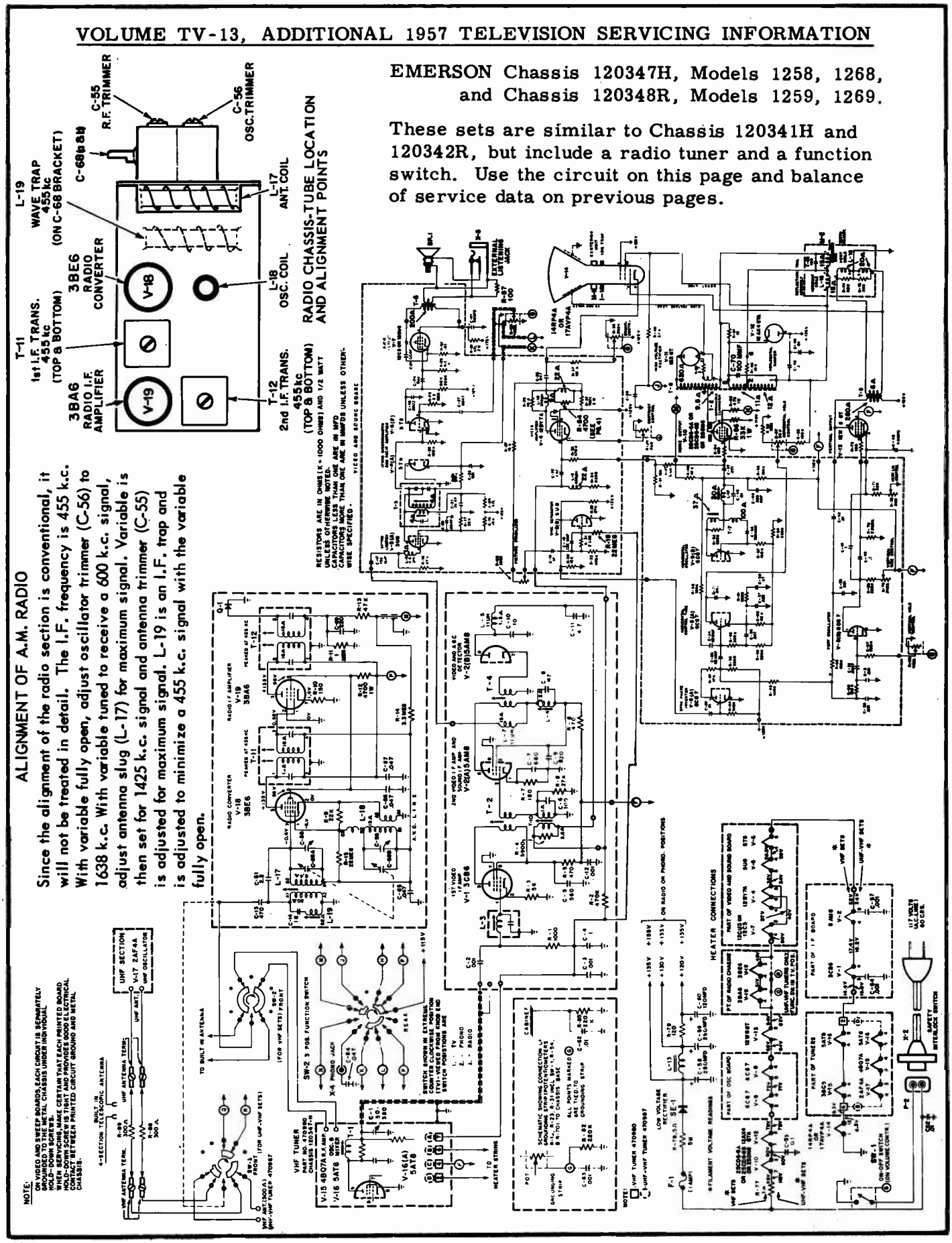

EMERSON RADIO & PHONOGRAPH CORPORATION

TYPE	MODEL NUMBER	T.V. CHASSIS #	TUBE SIZE	T.V. TUNER	TYPE OF UHF STRIP
VHF RECEIVERS (See Note Below)	2034S, 2038S	120345V	21ALP4B	470908	"TDB"
	2034S, 2038S	120345E		471013	"N"
	2060, 2062, 2056, 2058	120343E		471005	"N"
	2040S, 2042S	120346V	24DP4A	470913	"TDB"
UHF-VHF RECEIVERS	2061, 2063, 2057, 2059	120344G	21ALP4B	471016	No VHF Strips Needed

NOTE: *The VHF models above can, if desired, be easily adapted to UHF by means of interchangeable tuner channel coil strips or by use of an external converter. Make sure the correct type of UHF strip is used.*

To Remove Safety Glass.

21" Models – Remove knobs at top of mask and insert fingers into spaces formerly occupied by knobs. Pull mask out and then up to clear bottom channel. Remove the side glass retaining brackets. Loosen but do not remove the top and bottom brackets. Place fingers on each glass corner cut out so thumbs are free to move the glass retaining brackets towards each corner opening, thus allowing the safety glass to be removed.

24" Models – Remove top glass retaining strip. Remove two side decorative glass retaining strips while holding glass and then remove the safety glass from the cabinet.

To Remove Chassis From Cabinet.

All receiving type tubes and many components may be changed while the chassis is still in the cabinet. If it is necessary to remove the chassis from the cabinet, the following general method may be followed (slight variations may exist due to differences in cabinets).

1. Remove knobs and front mask as described above.
2. Remove screws which hold the tuner shaft support to cabinet bracket and those which hold the contrast, volume and on-off control to cabinet bracket.
3. Remove rear cover, antenna binding post and two screws holding rear tuner support bracket to roof of cabinet. Also remove the screw holding the top chassis brace to roof of cabinet. (2 used in 24" models)
4. (a) On 21" sets remove two nuts which hold side control assembly to control escutcheon. Unsolder speaker leads or remove speaker.
   (b). On 24" sets remove the control bracket which is secured to the inside front of the cabinet. Unsolder speaker leads or remove speaker.
5. Remove two screws, which are facing rear of cabinet, holding chassis base to support brackets, and two screws from bottom of cabinet which are holding chassis power supply bracket.

(Continued on the page following the double-page circuit diagram spread)

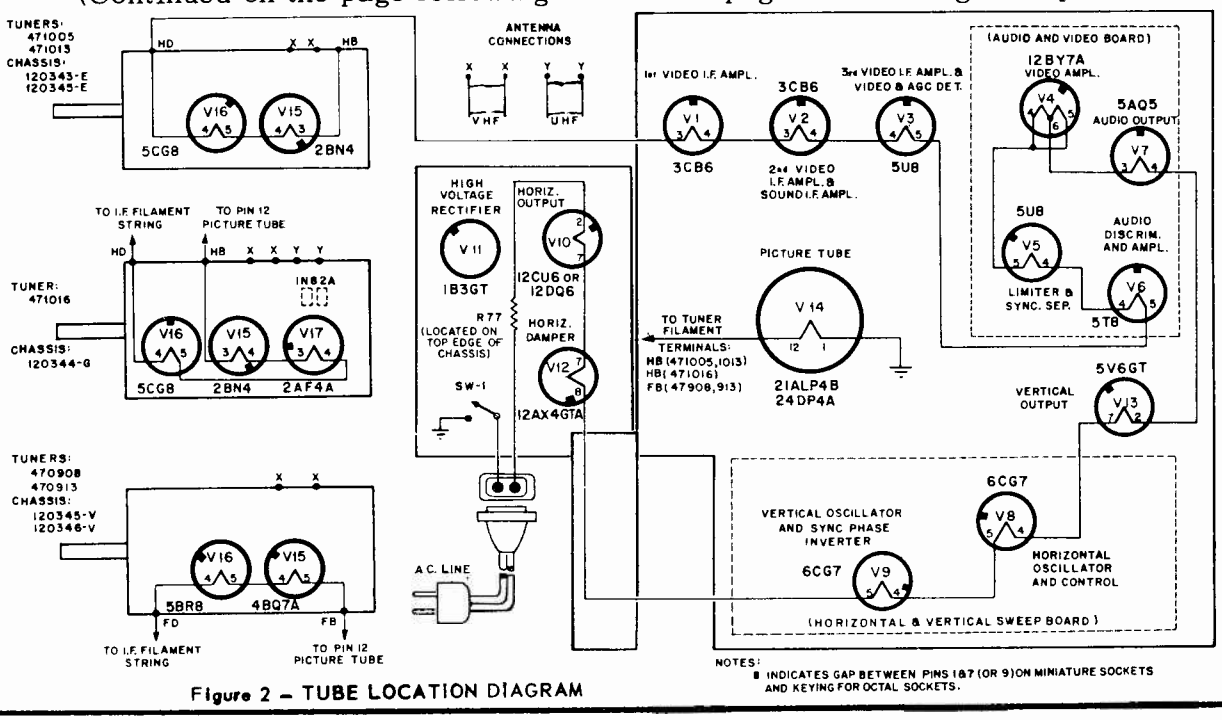

Figure 2 – TUBE LOCATION DIAGRAM

EMERSON (Continued)
Schematic Diagram
Chassis 120343E, 120344G, 120345E, -V, and 120346V.

SERVICING OF PRINTED BOARDS

To remove defective components one of several methods may be used. A recommended method is to cut close to the body of the defective component and solder the new part to the remaining leads. Another method is to apply heat at the junction point of the component wire lead and the printed board and lift out the component. If the wire lead is bent over, first heat and pry lead wire up. A defective component with many terminals may be removed by clipping into several parts and removing a small section at a time.

Use a low wattage (20 to 30 watts) soldering iron. Be careful not to apply excessive heat since this may cause the printed foil to loosen. Broken foil leads may be repaired by soldering a hookup wire across the break.

A small stiff bristled brush should be used to wipe away melted solder before it has a chance to accumulate or drip on adjacent parts or printed wiring.

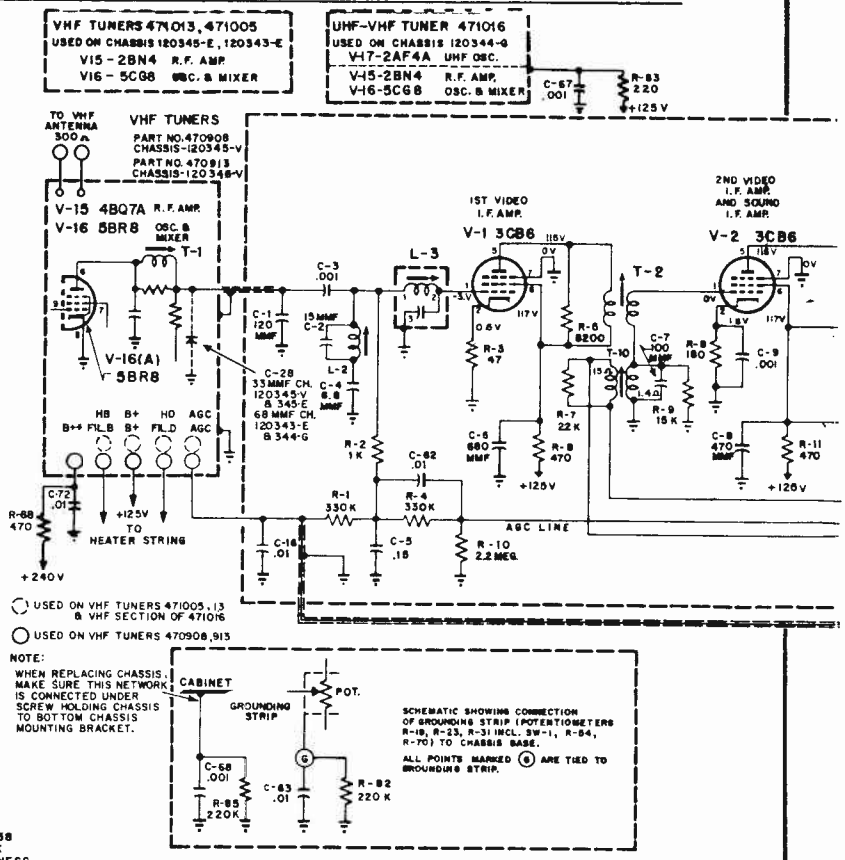

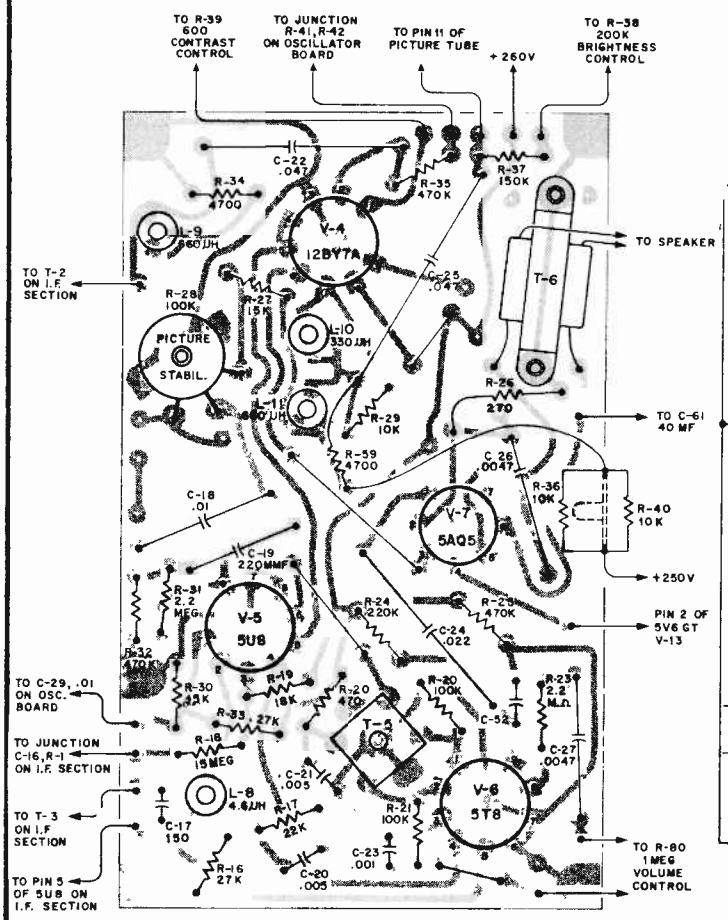

Figure 5 – AUDIO & VIDEO PRINTED CIRCUIT BOARD

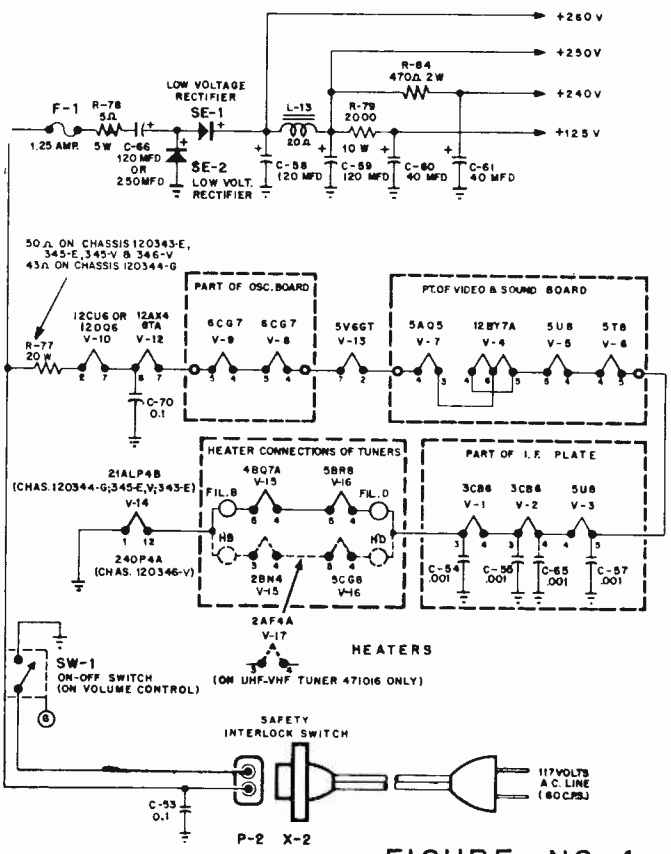

FIGURE NO. 4

VOLUME TV-13, ADDITIONAL 1957 TELEVISION SERVICING INFORMATION

EMERSON Schematic Diagram Chassis 120343E, 120344G, 120345E, -V, 120346V

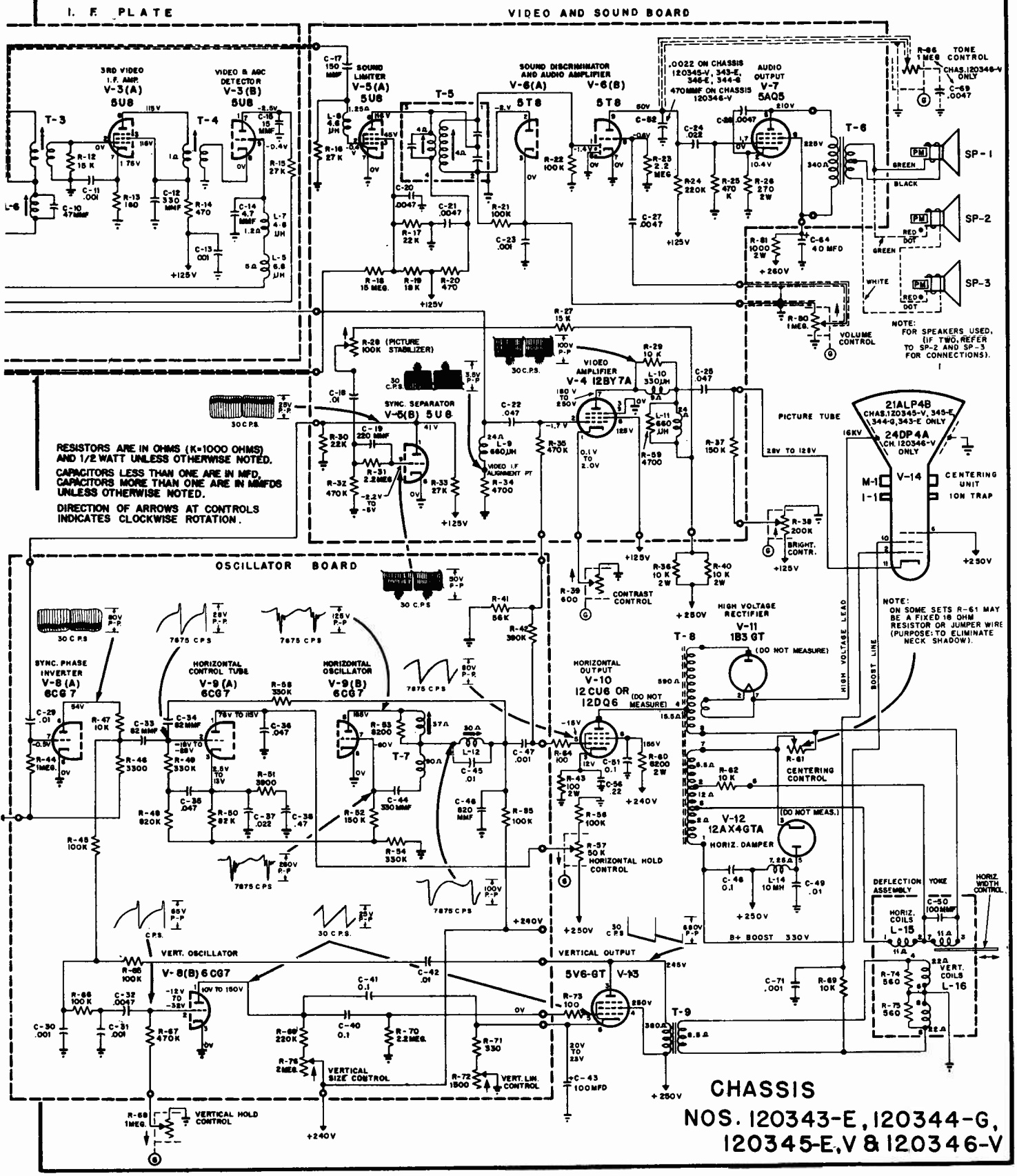

EMERSON Chassis 120343E, 120344G, 120345E, -V, 120346V, Continued

6. Remove picture tube socket, ion trap, width shim and high voltage lead. (Be sure to discharge high voltage.)
7. Pull chassis out towards rear of cabinet, being careful to guide and support deflection yoke as it slides off picture tube neck. NOTE – When replacing chassis, make certain filter network C-68, R-85 is reconnected. (See Schematic.)

Alignment of Miracle Picture Lock (Horizontal Oscillator and A.F.C.) – Refer to Figs. #3, 6.

This can be accomplished without removing chassis from cabinet as follows:

1. Turn picture stabilizer (R-28) fully clockwise (minimum resistance) and tune set to a known good channel.
2. Short phasing coil (L-12) by a jumper wire across C-45, .01 mfd capacitor.
3. Rotate horizontal hold control (R-57) fully clockwise (looking from front of set).
4. Starting with horizontal frequency slug (T-7) all the way "out" (towards you looking at top of chassis), rotate "in" until picture just locks into sync. Then turn slug in about 1/2 turn more.
5. Remove short from phase coil and starting with slug all the way "out", adjust "in" until picture almost locks into sync
6. Turn horizontal hold (R-57) to counterclockwise position to lock picture "in", then turn horizontal hold back to full clockwise position. If picture falls out of sync, adjust frequency coil slug (T-7) slightly.
7. Check for horizontal hold while switching channels. If this is not obtained at extreme clockwise position of horizontal hold control, turn frequency slug T-7 "in" slightly until desired results are obtained. If excessive squedging (Christmas Tree effect) is experienced while switching channels, readjust phase coil slightly. Check to make sure no horizontal bending is introduced at top of picture. *NOTE: T-7 and L-12 must be adjusted with a hex head adjustment tool.

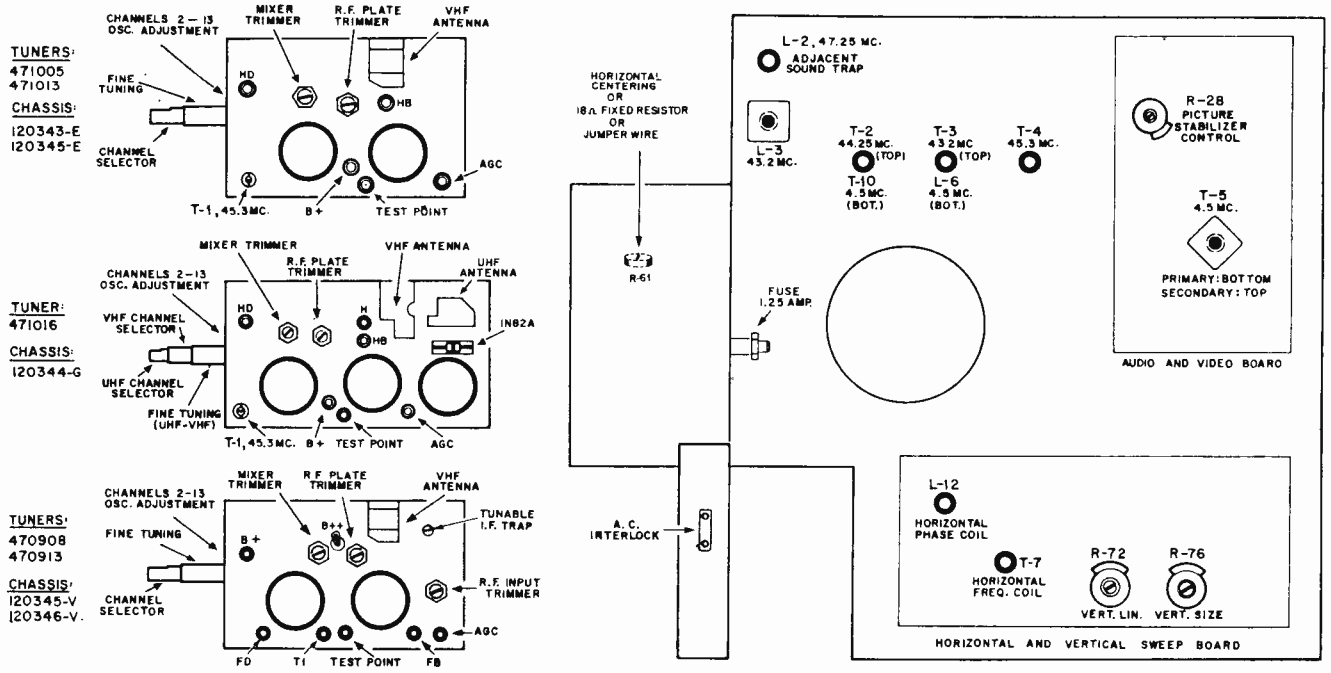

Figure 3 – ALIGNMENT POINT DIAGRAM

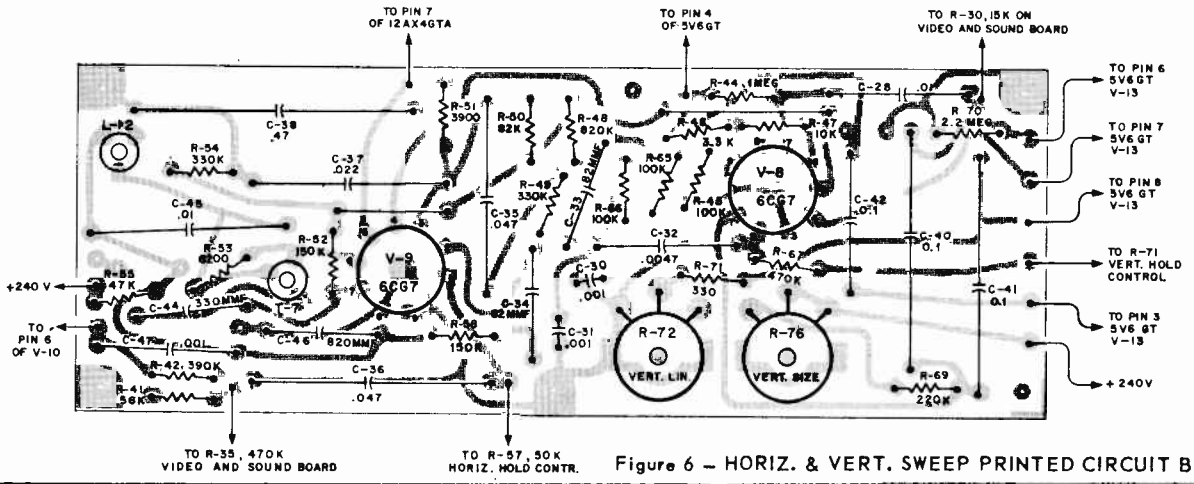

Figure 6 – HORIZ. & VERT. SWEEP PRINTED CIRCUIT BOARD

EMERSON RADIO & PHONOGRAPH CORPORATION

TYPE	MODEL NUMBER	TV CHASSIS	TUBE SIZE	TV TUNER	TYPE UHF STRIP
VHF RCVRS	1212,1228,1238,1244, 1246,1272,1274	120351-E	21BTP4A OR 21ALP4B	471020	N
UHF-VHF	1213,1229,1239,1245, 1247,1273,1275	120352-G		471017	NO UHF STRIPS NEEDED

All receiving type tubes and many components may be changed while the chassis is still in the cabinet. Here is the general method for removing chassis from cabinet if necessary.

1. Remove knobs. Of the 8 small brackets holding safety glass, remove the 2 on left and 2 on right side. Loosen brackets, but do not remove, at bottom and top. Place fingers of each hand at upper corners of glass cut out. Use thumbs to move brackets towards corner openings to release glass and lift out.
2. Remove screws which hold tuner shaft support, and those that hold contrast-volume control to cabinet bracket.
3. Remove rear cover, antenna post, and two screws holding rear tuner support bracket to roof of cabinet. Also remove two screws that hold two top chassis braces to roof of cabinet.
4. Remove two nuts that hold side control assembly to control escutcheon. Disconnect speaker leads or remove speaker.
5. Remove two screws which are facing rear of cabinet, holding chassis base to support brackets, and two screws holding transformer bracket.
6. Remove picture tube socket, ion trap, width shim, and high voltage lead (discharge high voltage first!).
7. Pull chassis out towards rear of cabinet, being careful to guide and support deflection yoke as it slides off picture tube neck.

(Circuit diagram on the next two pages, over; alignment on the page following.)

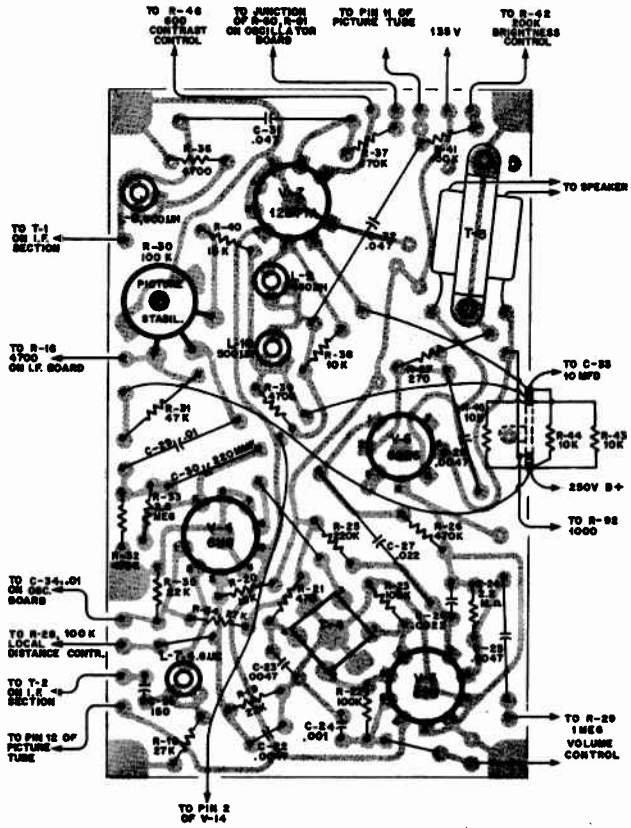

Figure 6 – AUDIO AND VIDEO PRINTED CIRCUIT BOARD

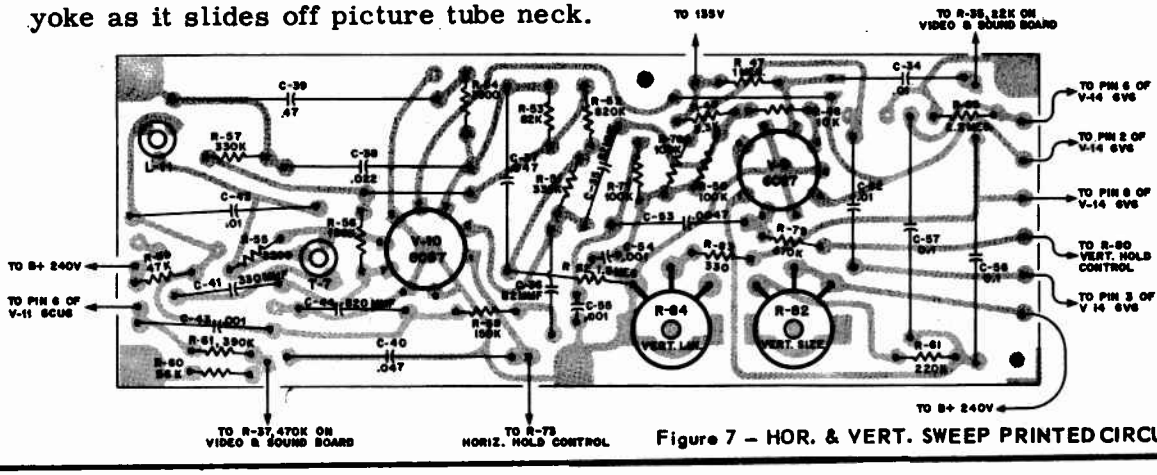

Figure 7 – HOR. & VERT. SWEEP PRINTED CIRCUIT BOARD

VOLUME TV-13, ADDITIONAL 1957 TELEVISION SERVICING INFORMATION

EMERSON Chassis 120351E and 120352G

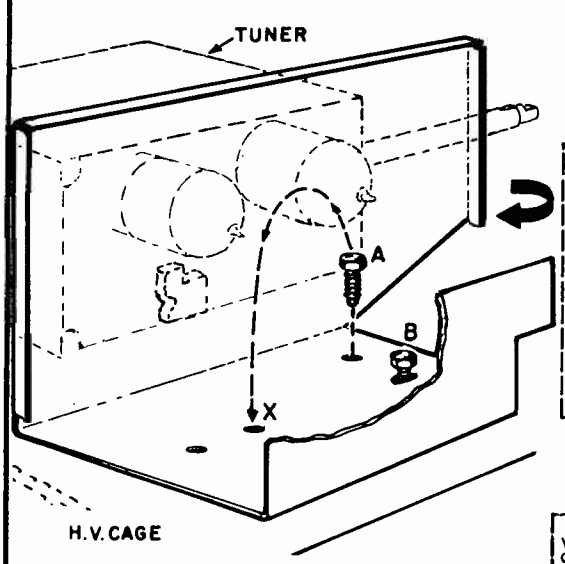

Figure 5 – ADAPTING VHF SETS FOR UHF OPERATION

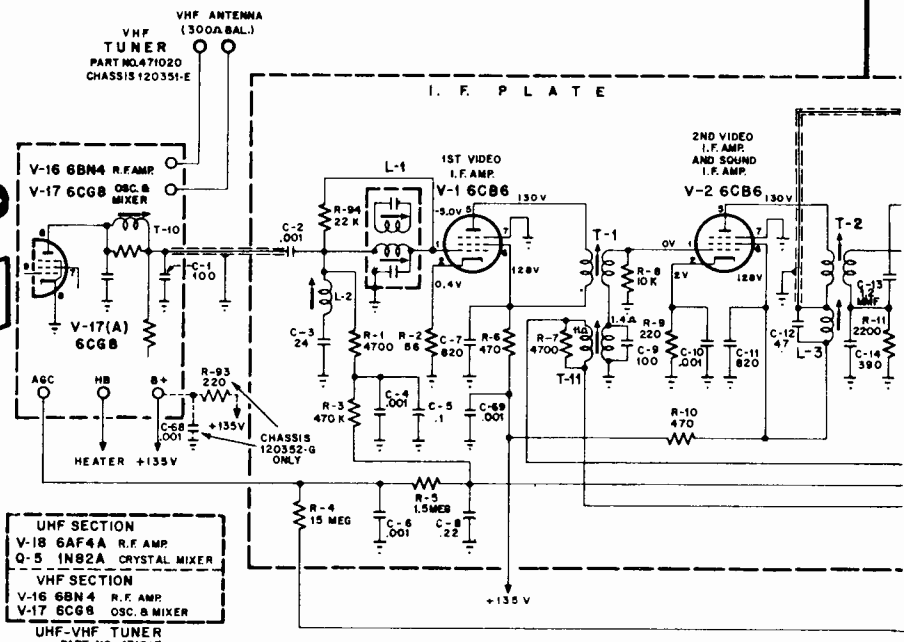

In order to insert UHF strips without removing the chassis, remove tuner knobs, screws "A" and "B" and tilt tuner towards rear of set to make strips accessible. (Reference: Figure No. 5).

NOTE: For convenience of servicing when a chassis is removed, tuner should be revolved 90° clockwise in order to keep tuner shaft from protruding too far beyond chassis. Remove screw "A" and loosen screw "B". Then revolve tuner and insert screw "A" through hole "X" and tighten both screws. (Ref. Figure No. 5)

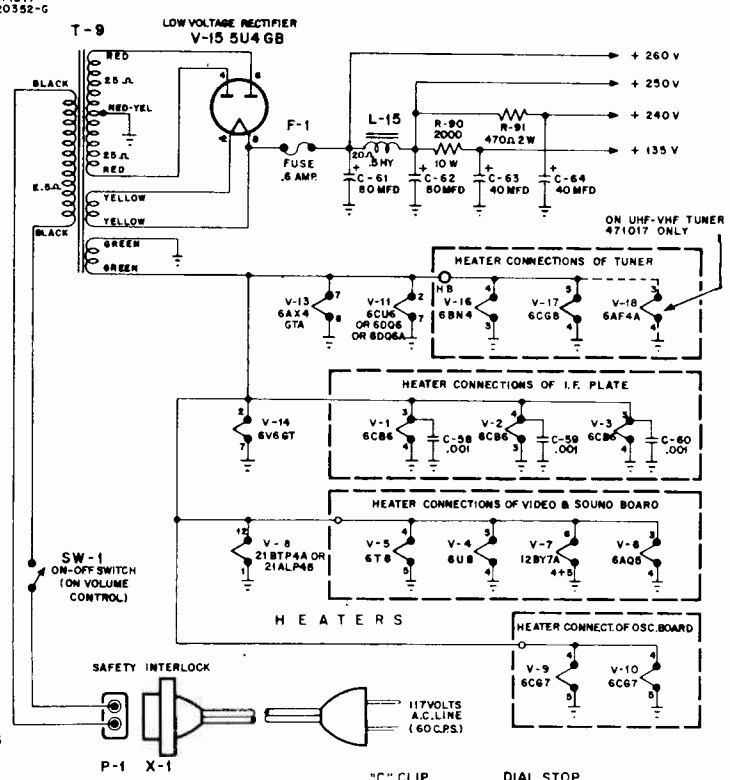

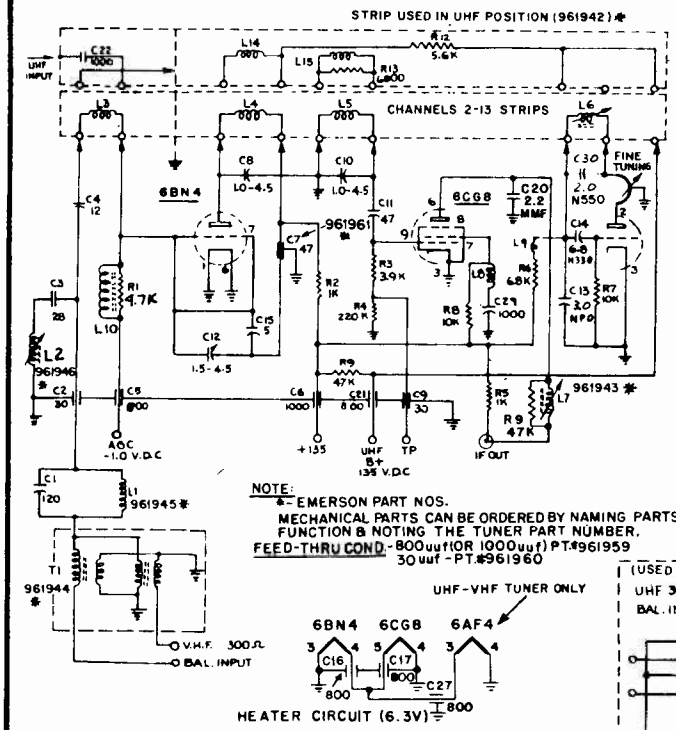

NOTE:
*-EMERSON PART NOS.
MECHANICAL PARTS CAN BE ORDERED BY NAMING PARTS FUNCTION & NOTING THE TUNER PART NUMBER.
FEED-THRU COND.-800uuf(OR 1000uuf) PT.#961959
30uuf-PT.#961960

SCHEMATIC – UHF-VHF No. 471017 TUNER,

VHF TUNER No. 471020

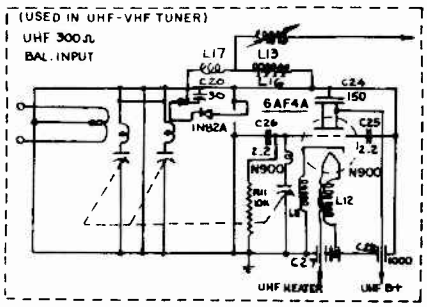

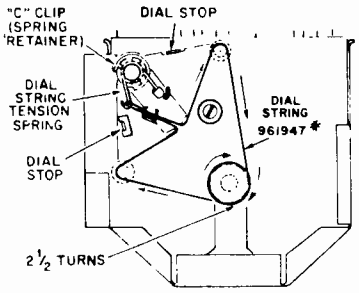

DIAL STRINGING, UHF-VHF TUNER

EMERSON Chassis 120351E and 120352G Schematic Diagram

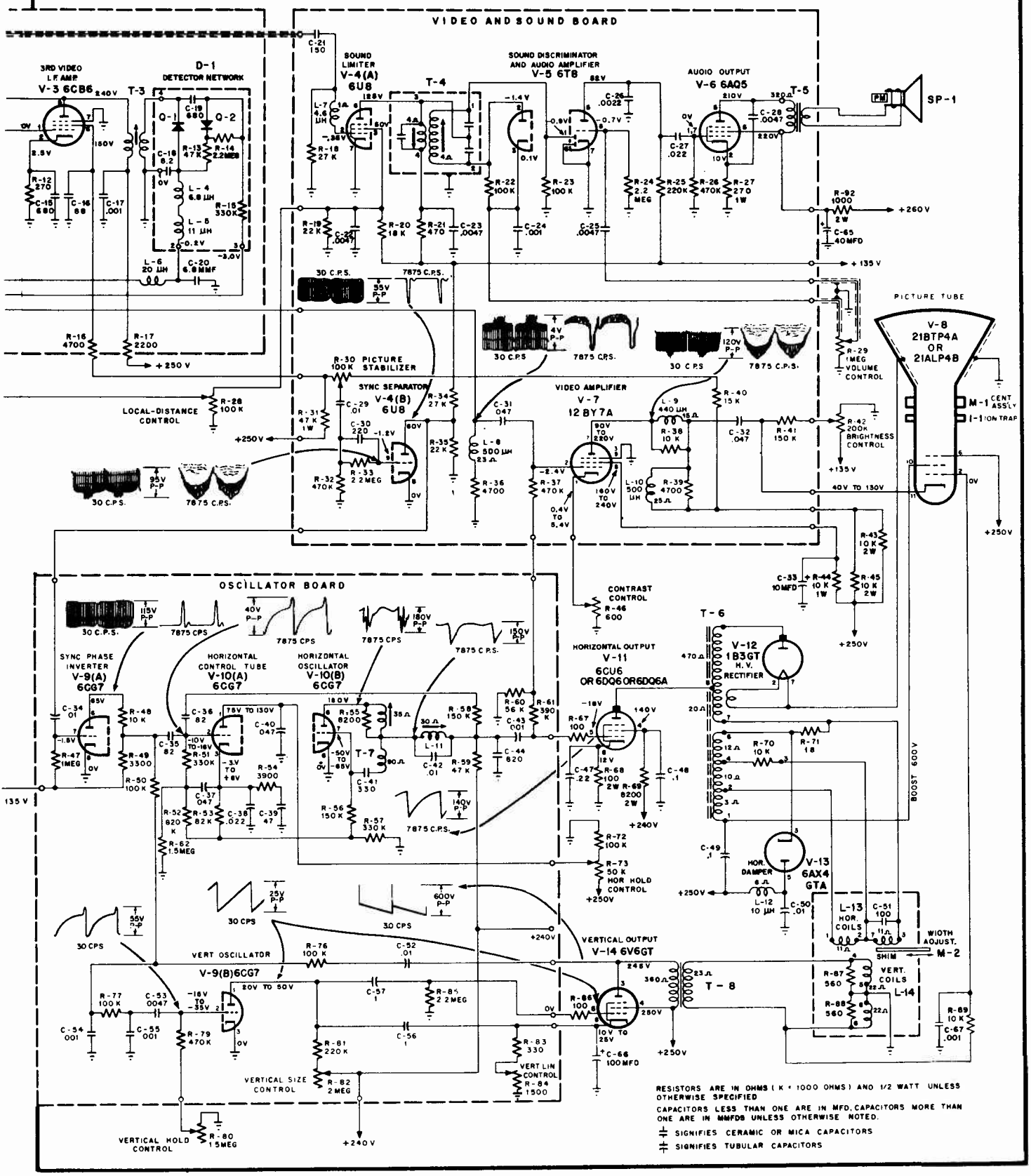

EMERSON Chassis 120351E and 120352G Alignment Information (Continued)

Video I.F. Alignment (See Fig. No. 4)

1. Connect 3 volt bias to A.G.C. line. Negative terminal to junction R-5, C-8, positive terminal to chassis. (R-28 maximum ccw position).
2. Connect I.F. marker generator to floating shield of tuner mixer tube (See Note Below) and V.T.V.M. to junction of L-8, R-36.
3. Adjust output of signal generator so that peaking of coils does not produce more than -2v D.C. on V.T.V.M.
4. Peak the following for maximum response: T-3, 44.25MC; T-2, 45.3MC; T-1, 42.6MC; L-1 bottom 42.9MC and T-10, 45.3MC.
5. Peak the following for minimum response increasing generator output if necessary: L-2, 41.25MC and L-1 top, 47.25MC.
6. Re-adjust L-1 bottom (42.9MC) and T-10 (45.3MC) for maximum response.
7. Connect an oscilloscope through a 20,000 ohm isolation resistor in place of the V.T.V.M. and connect a sweep generator to floating shield of tuner mixer tube along with marker generator. Adjust output of sweep to produce about 2 volts peak to peak at oscilloscope and reduce marker signal so as not to upset the response curve.
8. The 45.75MC marker should appear between 60% and 70% down with respect to its related peak. If necessary, adjust T-3 slightly.
9. The 42.9MC marker (See Fig. No. 1) should not fall below 20% of its related peak. Limits of response curve are 30% tilt and 20% peak to valley ratio.

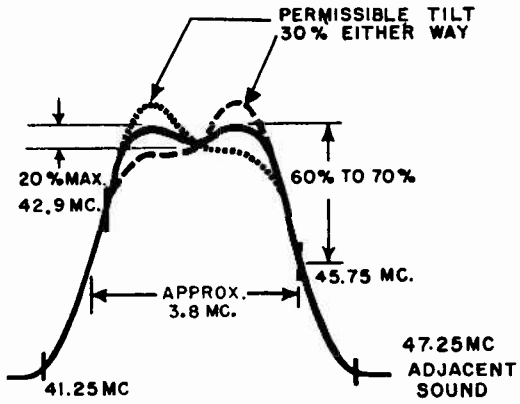

Figure 1. OVERALL I.F. RESPONSE CURVE

NOTE: Part of the procedure calls for use of a "floating" shield over the mixer tube of the tuner. The tube shields now used in the tuner cannot be removed from their mounts. Instead of a "floating" shield the following method is used.

Take a thin piece of copper or brass foil ½" by 2" and paste on to a thin piece of onion skin insulation. The insulation should extend about 1/8" beyond the two long sides and one short side while the foil should extend beyond the insulation on the other short side.

The shim assembly is then slipped lengthwise to fit between the mixer tube and its shield with the metal foil facing the tube. The short side with the extended insulation is placed towards chassis while the side with the foil extending beyond the insulation is connected to the sweep generator. The shim may now be rotated for maximum coupling as observed on the oscilloscope.

Sound I.F. Alignment (See Fig. No. 4)

1. With antenna loosely coupled to set adjust receiver to a weak signal channel.
2. Place a V.T.V.M. (negative scale) to junction L-7, R-18 and adjust T-11 and L-3 for maximum limiter voltage. Amount of input signal should be such that a sharp maximum reading can be obtained.
3. Connect V.T.V.M. to junction R-22, C-24 (negative scale) and detune discriminator (T-4) secondary to produce a maximum negative reading. (Looking at top of chassis secondary slug is closest to you.)
4. Adjust primary of T-4 for maximum negative reading.
5. Re-adjust secondary of discriminator T-4 towards original slug position for minimum reading on V.T.V.M. Check audio, if distorted. Repeat steps No. 1-5.

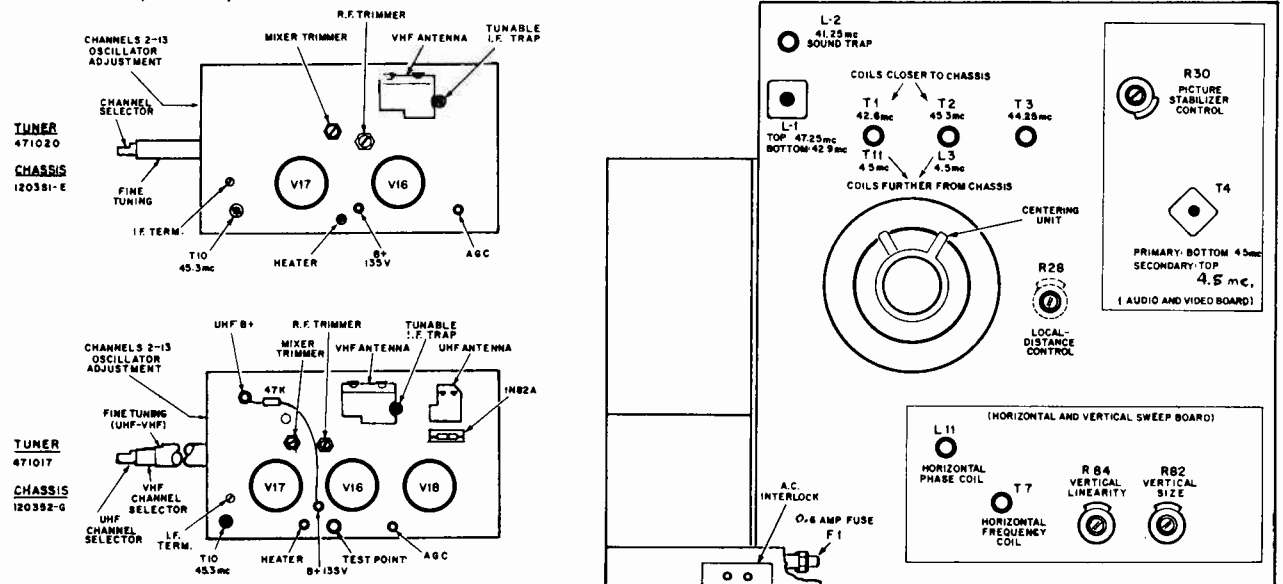

Figure 4 – ALIGNMENT POINT DIAGRAM

EMERSON RADIO & PHONOGRAPH CORPORATION

TYPE	MODEL NUMBER	TV CHASSIS	TUBE SIZE	TV TUNER	TYPE UHF STRIP
VHF RECEIVERS	1212, 1228, 1238, 1244, 1246, 1272, 1274	120353-E	21ALP4A OR 21BTP4A	471020	* "NA"
UHF-VHF RECEIVERS	1213, 1229, 1239, 1245, 1247, 1273, 1275	120354-G	21ALP4A OR 21BTP4A	471017	NO UHF STRIPS NEEDED

Chassis 120353E and 120354G used in the above listed models are identical to 120351E and 120352G covered in the material on the preceding four pages, with differences in horizontal AFC system and minor changes in resistance and capacity values in vertical oscillator circuit because B+ boost voltage is used instead of +240. Use the partial schematic below with balance of main schematic on preceding pages.

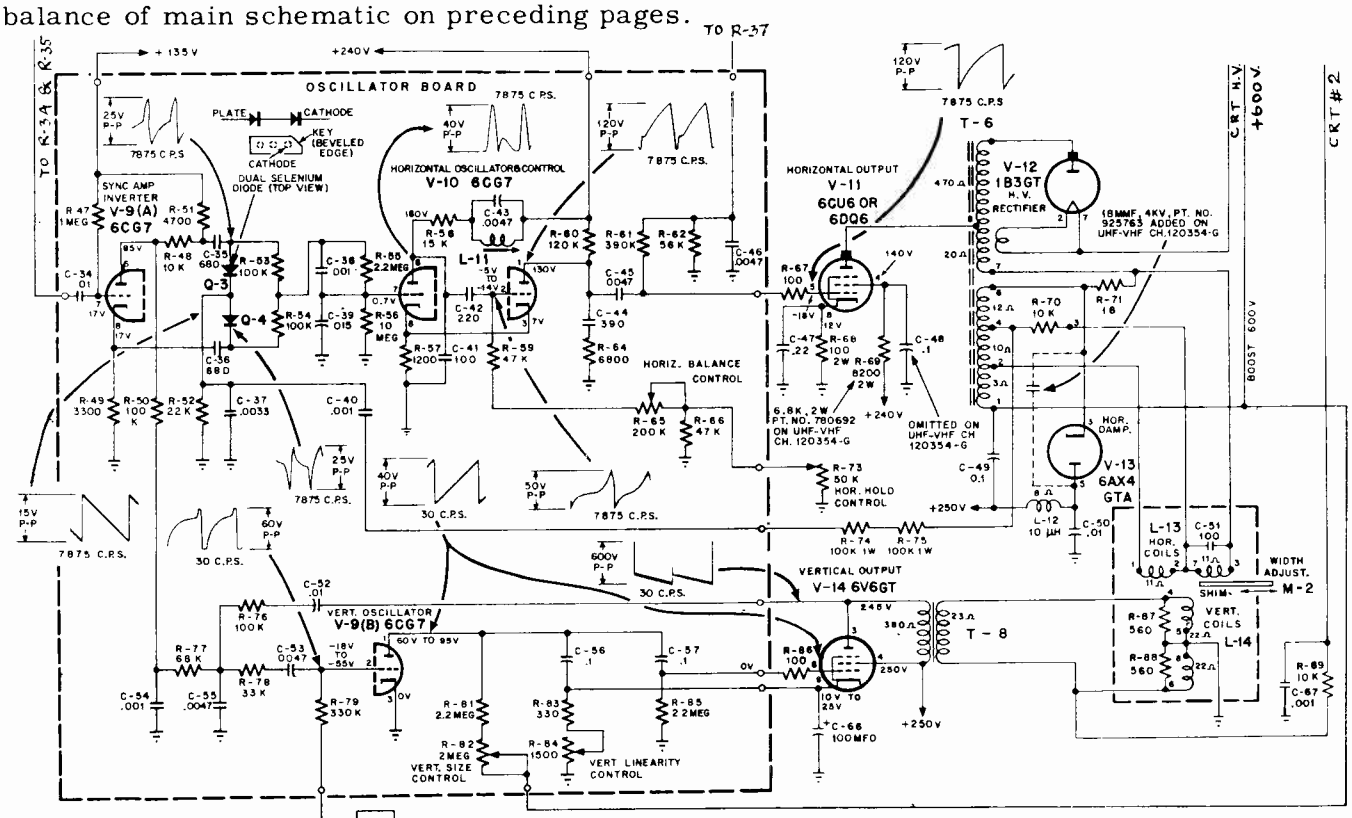

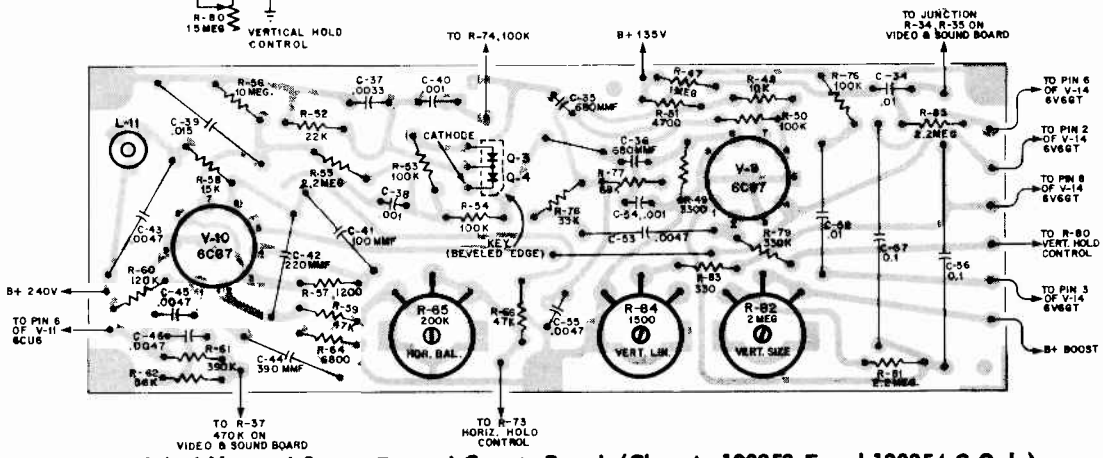

Horizontal And Vertical Sweep Printed Circuit Board (Chassis 120353-E and 120354-G Only)

Emerson Television

MODEL	1280
CHASSIS	120360E
MODEL	1281
CHASSIS	120361G

Model 1280, Chassis 120360E, and Model 1281, Chassis 120361G, Using Radio Chassis 120364B.

Models 1280, 1281, are three-way TV-Radio-Phono consoles. Except for the common dual-speaker system, the television section is completely independent of the radio-phono section which has its circuit below. These models use television chassis 120360E and 120361G which are respectively similar to chassis 120353E and 120354G covered by the material on the preceding page and references made on that page.

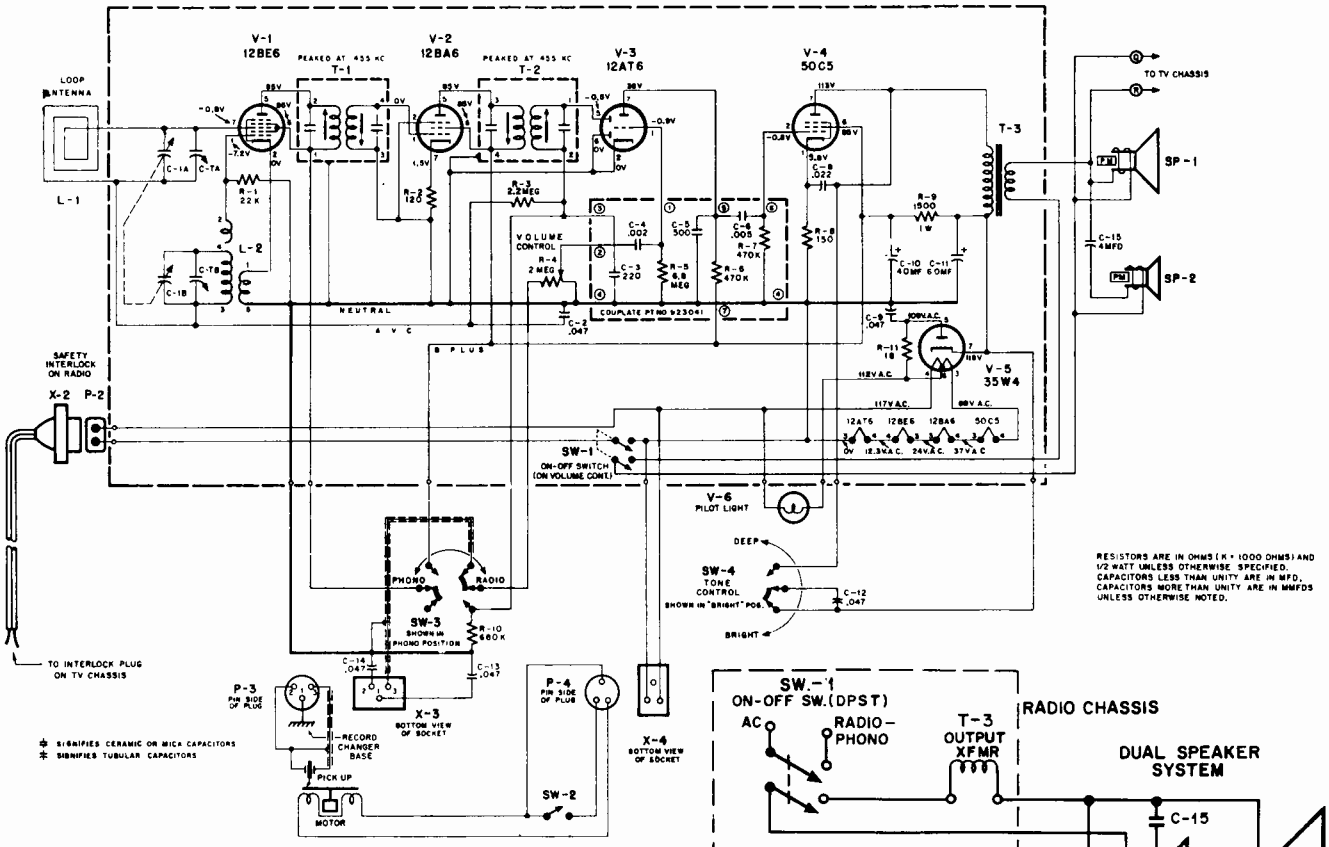

CHASSIS NO.120364 - B (USED WITH TV CHASSIS NO.120360-E OR 120361-G)

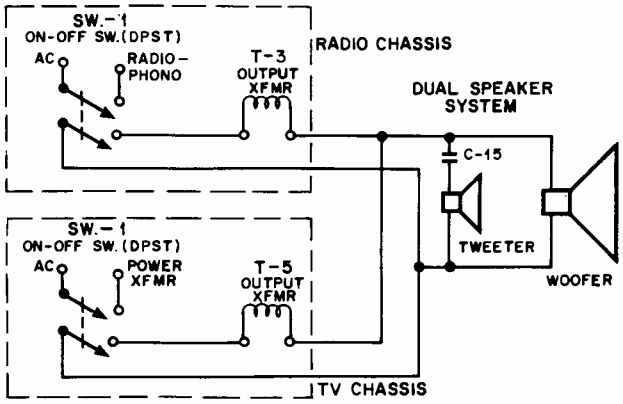

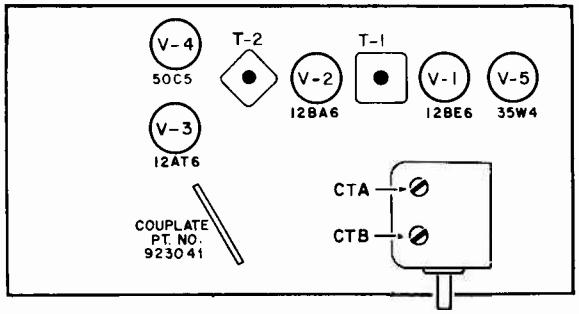

Tube Location and Alignment Point Diagram for Chassis 120364B

SPEAKER SWITCHING SYSTEM

Two double-pole single-throw (DPST) "ON-OFF" switches (sw-1 part of volume control) are used in both Radio and TV chassis to connect both speakers (woofer & tweeter) to radio or TV, depending upon which switch is in "ON" position. In "OFF" position, both speakers are disconnected.

Switches also perform regular function of turning either radio or TV sections on or off.

GENERAL ELECTRIC

"M3" Line, Models 17P1329, 17P1330, and 17P1331 (also UHF types)

(Service material below and on the next seven pages.)

Height and Vertical Linearity:

To make the vertical linearity and height controls accessible, it is necessary to remove the brightness and vertical hold knobs. Using a small screw driver, adjust the inner controls R214 and R208, simultaneously to provide proper picture height consistent with good vertical linearity. The final adjustment should extend the picture approximately 1/8 inch beyond the mask limits.

Horizontal AFC Controls:

The horizontal stabilizer coil adjustments normally will be necessary only when the horizontal phase detector or the oscillator tube is changed and not when the installation adjustments are made.

To Adjust Horizontal Stabilizer Coil:

1. Select a weak signal.
2. Short Test Point VI to VII. Refer to Fig. 3.
3. Connect a 1000-ohm resistor from Test Point VIII and IX.
4. Adjust Horizontal Hold Control R255 so that the picture "floats" back and forth through synced position.
5. Remove 1000-ohm resistor connected from Test Point VIII and IX.
6. Adjust L250 so that the picture again "floats" back and forth through synced position. Core of L250 is accessible through the plated wiring side of the chassis. See Figure 3.
7. Remove short between Test Point VI and VIII.
8. Check horizontal pull-in on various signals. Do not make any readjustments in R255 as the correct position of the control is determined in the preceding adjustments.

To Remove the Chassis:

1. Remove the telescopic antenna leads from the antenna posts.
2. Remove the four hex self-tapping screws holding the back to the cabinet and the hex screw near the interlock.
3. Pull the back off.
4. Pull off the control knobs.
5. Remove the Phillips screw between sections of telescopic antenna and remove the antenna from the cabinet.
6. Remove the picture tube socket assembly.

NOTE:- PARTICULAR CARE SHOULD ALWAYS BE TAKEN WHEN REMOVING OR REPLACING PICTURE TUBE SOCKET ASSEMBLY SO NOT TO DAMAGE TUBE SOCKET PINS.

7. Remove V shaped bracket by removing 2 self-tapping hex screws holding it to the chassis and the hex screw to the cabinet. Care should be taken not to damage ceramic capacitor from chassis to V bracket.
8. Remove the self-tapping hex screw near the tuning knob and the three hex screws holding the chassis to the bottom of the cabinet. Remove the hex screw holding the antenna board and interlock bracket to the bottom of the cabinet.
9. Grasp the chassis along side of the VHF tuner and H-V cage. Tilting top of chassis slightly forward. Move the lower part of chassis towards the rear of the cabinet until the nylon nut on the left side of the bottom of the chassis is beyond the small ledge in the cabinet. At this point, the chassis may be tilted more and moved outside of cabinet. Place the chassis at an angle to cabinet with H-V cage near the cabinet and other end turned out at an angle.
10. Remove ion trap, yoke clamp by removing open spring from clamp and centering ring.
11. Place hand on rear of cabinet while removing deflection yoke. Unsolder speaker leads, disconnect H-V lead to the picture tube.

To Install the Chassis:

1. Reverse the removal procedure and observe the following:

   a. Make sure the leads to the deflection yoke are dressed away from the picture tube.
   b. Connect the anode lead.
   c. Tilt the top of the chassis forward when replacing it in the cabinet and center control shaft with holes in cabinet.

To Clean the Safety Glass and Picture Tube:

Remove the two bottom screws securing the cabinet front to the cabinet. Tilt cabinet front out at bottom. Front, including safety glass, may now be removed by unhooking it at the top.

The inside of the face glass and the picture tube may now be cleaned. A mild solution of pure soap and water and a soft cloth are recommended for cleaning.

NOTE: Do not use cleaning agents such as carbon tetrachloride, gasoline or benzene or detergents as they are harmful to the safety glass and should not be applied.

To Remove the Picture Tube:

Before removing the picture tube, the chassis, yoke and the cabinet front must be removed as described in preceding sections on chassis removal and cleaning the safety glass.

The picture tube, which is secured by a clamp bracket, is mounted at the top ty two tabs. While supporting the rear of the picture tube with one hand, remove the two hex screws which hold the tabs to the cabinet and the two hex screws which hold the clamp bracket to the bottom of the cabinet. Tilt the picture tube forward and lift tube from the cabinet. Place tube on its face and remove the two hex screws from the top of bracket to remove it from the picture tube.

To replace the picture tube, reverse the above procedure and observe the following:

a. Replace insulating tape on the corners of the picture tube.
b. Make sure the anode button is positioned on the left side of the cabinet as you face the front.
c. It will be necessary to turn the picture tube and clamp bracket slightly sideways as it is inserted into the cabinet. Center the tube before tightening two hex screws in tabs and two hex screws in the bottom of the cabinet.

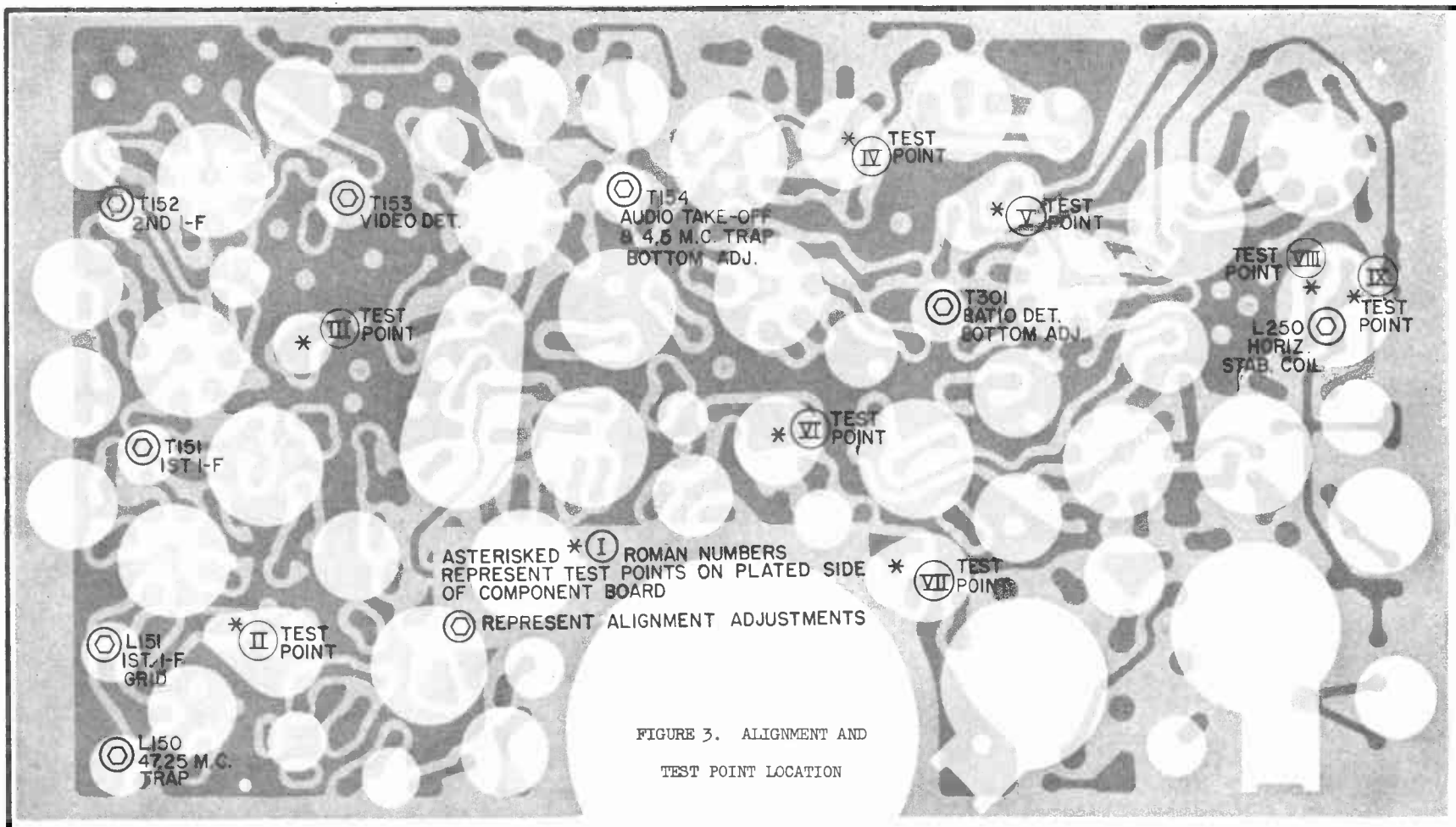

FIGURE 3. ALIGNMENT AND TEST POINT LOCATION

Pre-peaking Coil Adjustment:

If difficulty is experienced in obtaining the proper video I-F response as may occur when the receiver is far out of alignment, the tuning of the individual coils may be checked.

If each coil is peaked at the respective frequency specified in the AM pre-peaking frequency chart, an overall I-F response curve which closely approximates the proper curve will be achieved.

The AM signal required for pre-peaking the I-F coils and for aligning the trap coil may be obtained from an accurate AM signal generator. This generator should cover 37 to 48 megacycles at the fundamental frequency with available internal 400 cycle modulation. When this type of signal is used, the traps should be adjusted for minimum 400 cycle signal, and maximum 400 cycle signal for the I-F coils as observed on the oscilloscope.

When adjusting the I-F coils, L135 and the 47.25 mc trap coil L150, the AM signal should be applied to the receiver through the I-F sweep jig.

A-M PRE-PEAKING FREQUENCIES

Tune for Maximum	
L136	45.0 mc
L151	42.5 mc
L152	44.15 mc
T151	42.9 mc
T152	45.1 mc
Tune for Minimum	
L150	47.25 mc

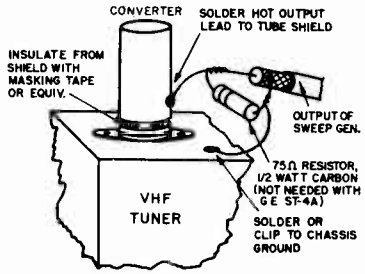

FIGURE 4. I-F SWEEP JIG

GENERAL ELECTRIC Models 17P1329, 17P1330, 17P1331, Alignment Continued

VIDEO I-F SYSTEM

The alignment of the I-F system involves the adjustment of 1 trap and 5 pass-band tank circuits. Allow at least 15 minutes warm-up for the receiver and test equipment before proceeding. Follow the usual precautions regarding equipment termination and cable dress. Some tuning cores will apparently go through two peaks. In all cases, the cores should be tuned to the first peak starting from the "out" position. Adjustment locations are indicated in Figure 3.

NOTES:

1. Set channel selector to Channel 11. Turn fine tuning control fully counterclockwise. Set contrast control fully clockwise.
2. Connect sweep generator to capacity, type jig shown in Figure 3. If General Electric sweep equipment is used, the indicated resistor should be omitted.
3. Connect a 3-volt battery from Test Point II to chassis (positive battery lead to chassis).
4. Connect scope through 10,000 ohms to Test Point III. Calibrate vertical gain of scope for 3 volts peak-to-peak for 2 inch deflection. When aligning base-line to 45 mc, marker should be kept at 2 inches. Align as shown in Video I-F Alignment Chart.

4.5 MC TRAP ALIGNMENT

1. Turn contrast control fully clockwise.
2. Connect detector network to Test Point IV. Connect oscilloscope to detector network, shown below.
3. Apply a 4.5 mc AM signal through .001mf to Test Point III.
4. Tune the bottom core of T154 for minimum signal observed on oscilloscope.

NOTE: The position of the top and bottom core of T154 is considered from the component view of the chassis.

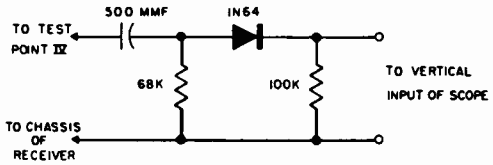

DETECTOR NETWORK

VIDEO I-F ALIGNMENT CHART

STEP	ADJUST	DESIRED RESPONSE	REMARKS
1	L150 (trap) for minimum at 47.25 mc See note.	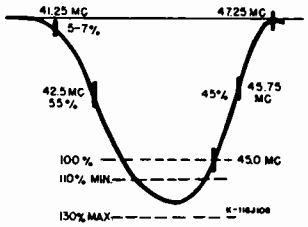	Adjust L150 for minimum output using AM signal. Adjust L135 for maximum output using AM signal. See section on pre-peaking for above adjustments. 41.25 mc marker is very critical and should be kept between limits of 5-7%. Peak of curve may fall between limits of 110% and 130% using 45 mc as 100% reference.
2	L135 to maximum at 45 mc. See note.		
3	T151 to set 42.5 mc marker at 45%.		
4	T152 to set 45.75 mc marker at 45%.		
5	L152 and L151 for peak region symmetry.		

AUDIO I-F ALIGNMENT

NOTES:

1. Tune in a television signal. This will provide a 4.5 mc signal source for audio I-F alignment. Keep the volume control turned down unless the speaker is connected.

2. Connect two matched 100,000 ohm resistors (in series) between pin 2 of V108A (5T8) and chassis.

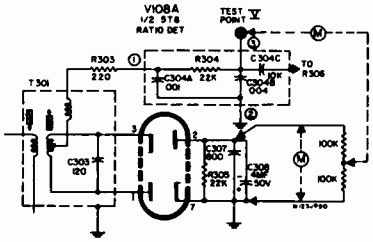

FIGURE 6. RATIO DETECTOR

AUDIO ALIGNMENT CHART

STEP	CONNECT VTVM or 20,000 OHMS/VOLT METER	ADJUST	METER INDICATION	REMARKS
1	Between Pin No. 2 of V108A and chassis. (See Figure 6)	T154 secondary (top)	Adjust for maximum deflection.	Repeat steps 1, 2 and 3 to assure proper band-width.
2		T301 primary (bottom)	Adjust for maximum deflection.	
3	Between Test Point V and the center of the two 100,000 ohm resistors (Figure 6)	T301 secondary (top)	Adjust for zero volts D-C output.	The position of the top and bottom cores of T154 and also T301 is considered from component side of the component board.

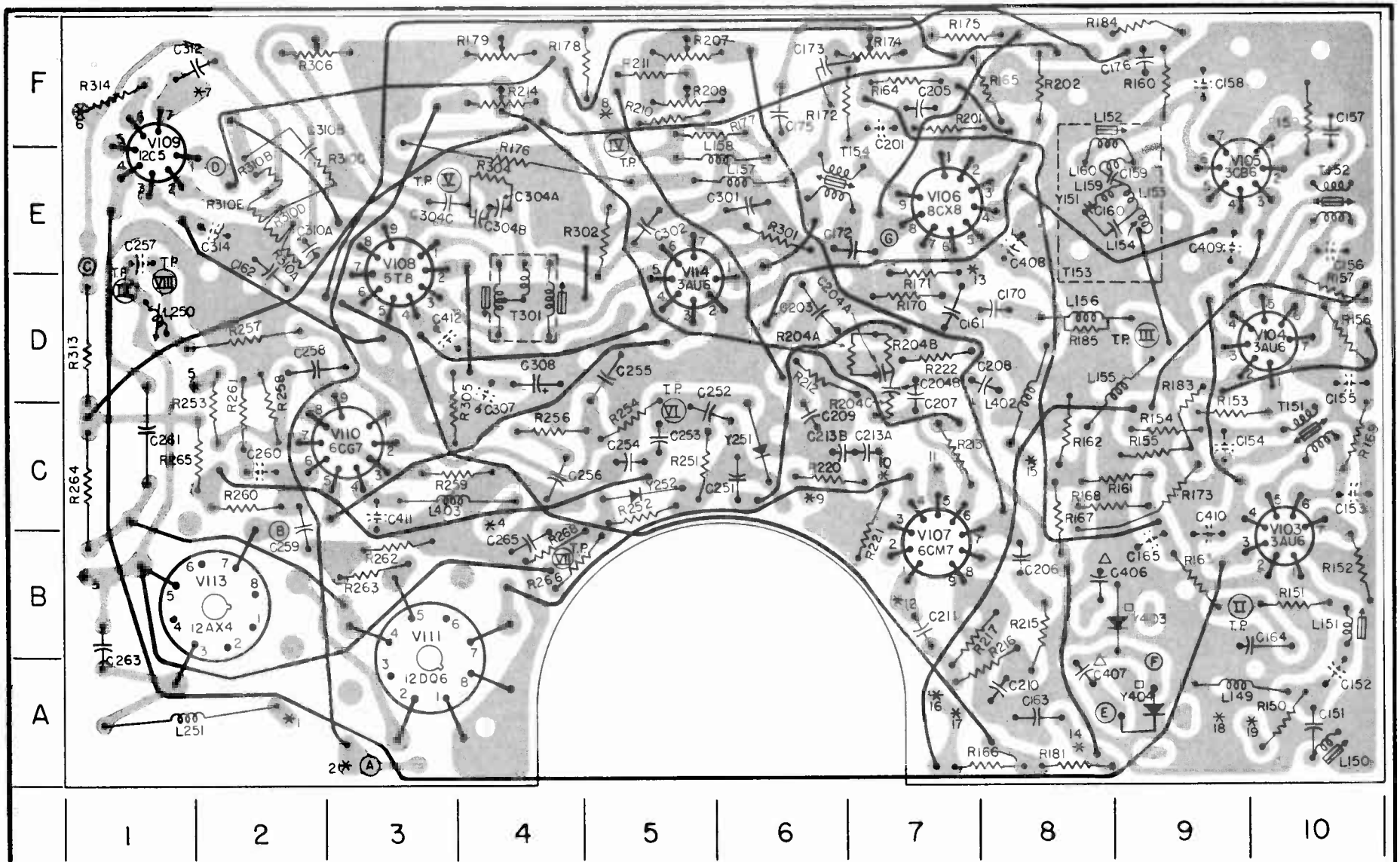

ASTERISK ✱

REPRESENT WIREWRAP TERMINALS MOUNTED ON COMPONENT BOARD FOR CONNECTING WIRES FROM MAIN CHASSIS

Ⓐ CIRCLED LETTERS REPRESENT INTER-CONNECTING WIRES TO MAIN CHASSIS

Ⓘ ROMAN NUMBERS REPRESENT TEST POINTS ON COMPONENT BOARD

ASTERISKED ✱ NUMBERS

1 FROM PIN 5 HORZ. SWEEP TRANSF.
2 FROM T201-YELLOW LEAD & VERT. YOKE, LUG 4
3 FROM C405A, POSITIVE TERMINAL
4 FROM VHF TUNER FILAMENT (BROWN)
5 FROM CENTER LUG HORZ. HOLD CONT. (R255)
6 FROM T302 (RED LEAD)
7 FROM T302 (BLUE LEAD)
8 FROM CRT SOCKET, PIN 7
9 FROM T201 (RED LEAD) & VERT. YOKE, LUG 3
10 FROM CRT SOCKET, PIN 2
11 FROM CRT SOCKET, PIN 8
12 FROM T201 (BLUE LEAD)
13 FROM C404B POSITIVE TERMINAL
14 FROM VHF TUNER AGC (WHITE LEAD)
15 FROM CRT SOCKET, PIN 1
16 FROM C405A, POSITIVE TERMINAL
17 FROM C266, NEGATIVE TERMINAL

COMPONENT BOARD VIEWED FROM COMPONENT SIDE

GENERAL ELECTRIC "M3" Line
Models 17P1329, 17P1330, 17P1331
Servicing Information, Continued

VALUE OR DESCRIPTION BY SYMBOL		
CAPACITORS		
C151	A-10	20mmf.
C152	A-10	800mmf.
C153	C-10	910mmf.
C154	C-9	800mmf.
C155	D-10	800mmf.
C156	E-10	680mmf.
C157	F-10	800mmf.
C158	F-9	680mmf.
C159	E-8	3mmf.
C160	E-8	5mmf.
C161	D-7	10,000mmf.
C162	E-2	20,000mmf.
C163	A-8	.18mf.
C164	B-10	.047mf.
C165	B-9	800mmf.
C170	D-8	.047mf.
C172	E-6	10,000mmf.
C173	F-6	47mmf.
C175	F-6	.1mf.
C176	F 9	800mmf.
C201	F-7	5000mmf.
C203	D-6	.15mf.
C204A	D-7	RC Assembly
C204B	D-7	RC Assembly
C205	F-7	RC Assembly
C206	B-8	.0039mf.
C207	D-7	.022mf.
C208	D-8	.022mf.
C209	C-6	.033mf.
C210	A-8	800mmf.
C211	B-7	.018mf.
C213B	C-6	10,000mmf.
C213A	C-7	10,000mmf.
C251	C-6	47mmf.
C252	C-5	82mmf.
C253	C-5	620mmf.
C254	C-5	750mmf.
C255	D-5	5000mmf.
C256	C-4	.18mf.
C257	E-1	.0082mf.
C258	D-2	910mmf.
C259	C-2	5000mmf.
C260	C-2	560mmf.
C261	C-1	.1mf.
C263	B-1	270mmf.
C265	B-4	1200mmf.
C301	E-6	5000mmf.
C302	E-5	3900mmf.
C304A	E-4	RC Assembly
C304B	E-4	RC Assembly
C304C	E-3	RC Assembly
C307	D-4	800mmf.
C308	D-4	4mf.
C310A	E-2	RC Assembly
C310B	E-2	RC Assembly
C312	F-1	10,000mmf.
C314	E-2	100mf.
C406	B-8	1500mmf.
C407	A-8	1500mmf.
C408	E-8	800mmf.
C409	E-9	800mmf.
C410	C-9	800mmf.
C411	C-3	800mmf.
C412	D-3	800mmf.
RESISTORS		
R150	A-10	22 ohms
R151	B-10	7500 ohms
R152	B-10	47 ohms
R153	C-9	18,000 ohms
R154	C-9	470,000 ohms
R155	C-9	470,000 ohms
R156	D-10	100 ohms
R157	D-10	220 ohms
R159	F-10	180 ohms
R160	F-9	220 ohms
R161	C-9	150,000 ohms
R162	C-8	3300 ohms
R163	B-9	2.2 megohms
R164	F-7	3.9 megohms
R165	F-8	3.3 megohms
R166	A-8	16 megohms
R167	C-8	1.8 megohms
R168	C-8	18 megohms
R169	C-10	47 ohms
R170	D-7	1 megohm
R171	E-7	75 ohms
R172	F-6	22,000 ohms
R173	C-9	22 megohms
R174	F-7	Contrast Cont. 15K
R175	F-7	2200 ohms
R176	E-4	5600 ohms, 7W
R177	F-5	18,000 ohms
R178	F-4	180,000 ohms
R179	F-4	Brightness Cont., 200K
R181	A-8	2.2 megohms
R183	D-9	33,000 ohms
R184	F-9	1000 ohms
R185	D-8	22,000 ohms
R202	F-8	330,000 ohms
R204A	D-6	RC Assembly
R204B	D-7	RC Assembly
R204C	D-7	RC Assembly
R207	F-5	Vert. Hold Cont., 1.5 megohms
R208	F-5	Height Cont., 400K
R210	F-5	150,000 ohms
R211	F-5	820,000 ohms
R212	D-6	1 megohm
R213	C-7	2.7 megohms
R214	F-4	Vertical Lin. Cont., 3 megohms
R215	B-8	47,000 ohms
R216	A-8	68,000 ohms
R217	B-7	56,000 ohms
R220	C-6	15,000 ohms
R221	B-7	47,000 ohms
R222	D-7	3300 ohms
R251	C-5	560,000 ohms
R252	C-5	390,000 ohms
R253	D-2	820,000 ohms
R254	C-5	1.5 megohms
R256	C-4	56,000 ohms
R257	D-2	15,000 ohms
R258	D-2	39,000 ohms
R259	C-3	1200 ohms
R260	C-2	47,000 ohms
R261	D-2	15,000 ohms
R262	B-3	820,000 ohms
R263	B-3	100 ohms
R264	C-1	10,000 ohms
R265	C-1	27,000 ohms
R266	B-4	5.6 megohms
R268	B-4	100,000 ohms
R301	E-6	180 ohms
R302	E-5	330 ohms
R304	E-4	RC Assembly
R305	D-3	22,000 ohms
R306	F-2	Volume Cont., 500K
R310A	E-2	RC Assembly
R310B	E-2	RC Assembly
R310C	E-2	RC Assembly
R310D	E-2	RC Assembly
R310E	E-2	RC Assembly
R313	D-1	330 ohms
R314	F-1	1500 ohms
COILS		
L149	A-9	.106 uh
L150	A-10	Trap, 47.25mc
L151	B-10	I-F grid
L152	F-8	In video det. can
L153	E-9	31 uh
L154	E-9	5.6 uh
L155	D-8	560 uh
L156	D-8	100 uh
L157	E-6	820 uh
L158	E-5	270 uh
L159	E-8	.22 uh
L160	E-8	1.2 uh
L250	D-1	Horizontal stabilizer
L251	A-1	10 uh
L402	D-8	2.2 uh
L403	C-3	2.2 uh
DIODES		
Y151	E-8	Crystal
Y251	C-6	Germanium
Y252	C-5	Germanium
Y403	B-9	Germanium
Y404	A-9	Germanium
TRANSFORMERS		
T151	C-10	1st video I-F
T152	E-10	2nd video I-F
T153	E-8	video det.
T154	E-6	Audio take-off & 4.5 mc trap
T301	D-4	Ratio Det.
TUBES		
V103	C-10	
V104	D-10	3AU6
V105	E-9	3CB6
V106	E-7	8CX8
V107	B-7	6CM7
V108	D-3	5T8
V109	E-1	12C5
V110	C-3	6CG7
V111	B-3	12DQ6
V113	B-2	12AX4
V114	D-5	3AU6
TEST POINTS		
II	B-9	
III	D-9	
IV	E-5	
V	E-3	
VI	C-5	
VII	B-4	
VIII	D-1	
IX	D-1	
WIRE WRAP TERMINALS		
*1	A-2	
*2	A-3	
*3	B-1	
*4	C-4	
*5	D-1	
*6	F-1	
*7	F-1	
*8	F-5	
*9	C-6	
*10	C-7	
*11	C-7	
*12	B-7	
*13	E-7	
*14	A-8	
*15	C-8	
*16	A-7	
*17	A-7	
*18	A-9	
*19	A-10	
INTERCONNECTING WIRES		
(A)	A-3	
(B)	C-2	
(C)	E-1	
(D)	E-2	
(E)	A-8	
(F)	A-9	
(G)	E-7	

△ CAPACITORS C406, C407 ARE USED ONLY WITH GERMANIUM RECTIFIERS

ALL COMPONENTS MOUNTED ON COMPONENT SIDE OF BOARD EXCEPT THE KEYSTONE

CAPACITORS SHOWN IN PHANTOM-MOUNTED ON PLATED SIDE. IN SOME RECEIVERS CERAMIC CAPACITORS MAY BE USED

CIRCLED Ⓐ LETTERS

- A TO C266, POSITIVE TERMINAL
- B TO R402, FILAMENT DROPPING RESISTOR
- C TO C314, POSITIVE TERMINAL
- D TO C405B, +135V
- E TO C404A, POSITIVE TERMINAL (SEE NOTE)
- F TO C403, POSITIVE TERMINAL (SEE NOTE)
- G TO C404C, POSITIVE TERMINAL

NOTE: INTERCONNECTING WIRES FROM Ⓔ & Ⓕ NOT USED WHEN SELENIUM RECTIFIERS ARE USED.

18 FROM GROUND OF LINK, VHF TUNER
19 FROM LINK, VHF TUNER

□ Y403-Y404 ARE GERMANIUM RECTIFIERS. ON SOME SETS SELENIUM RECTIFIERS (MOUNTED ON METAL CHASSIS) ARE USED

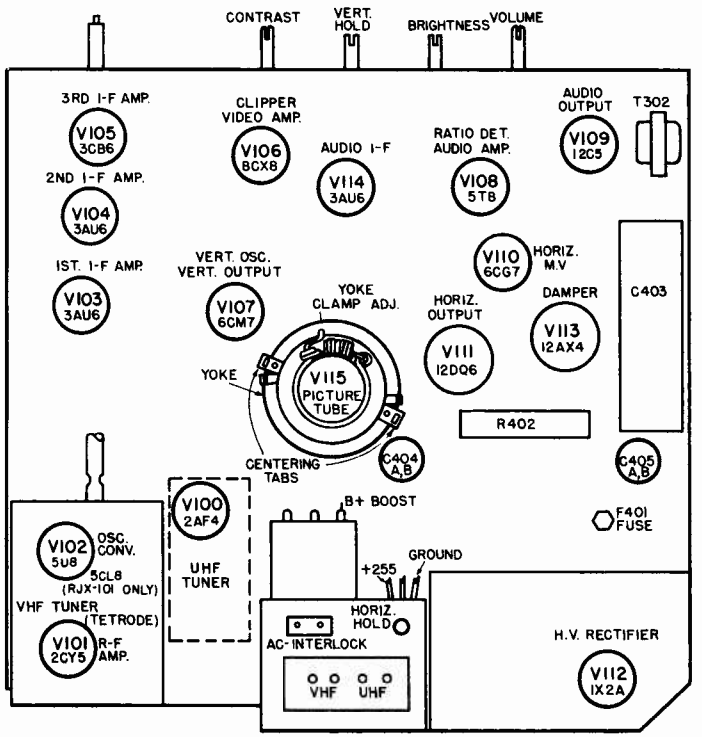

REAR VIEW OF CHASSIS

GENERAL ELECTRIC Models 17P1329, 17P1330, 17P1331, Schematic Diagram

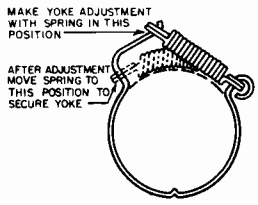

YOKE CLAMP

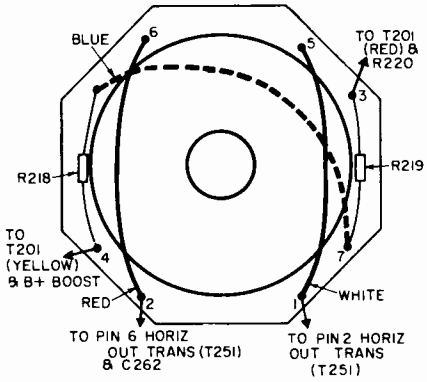

YOKE WIRING

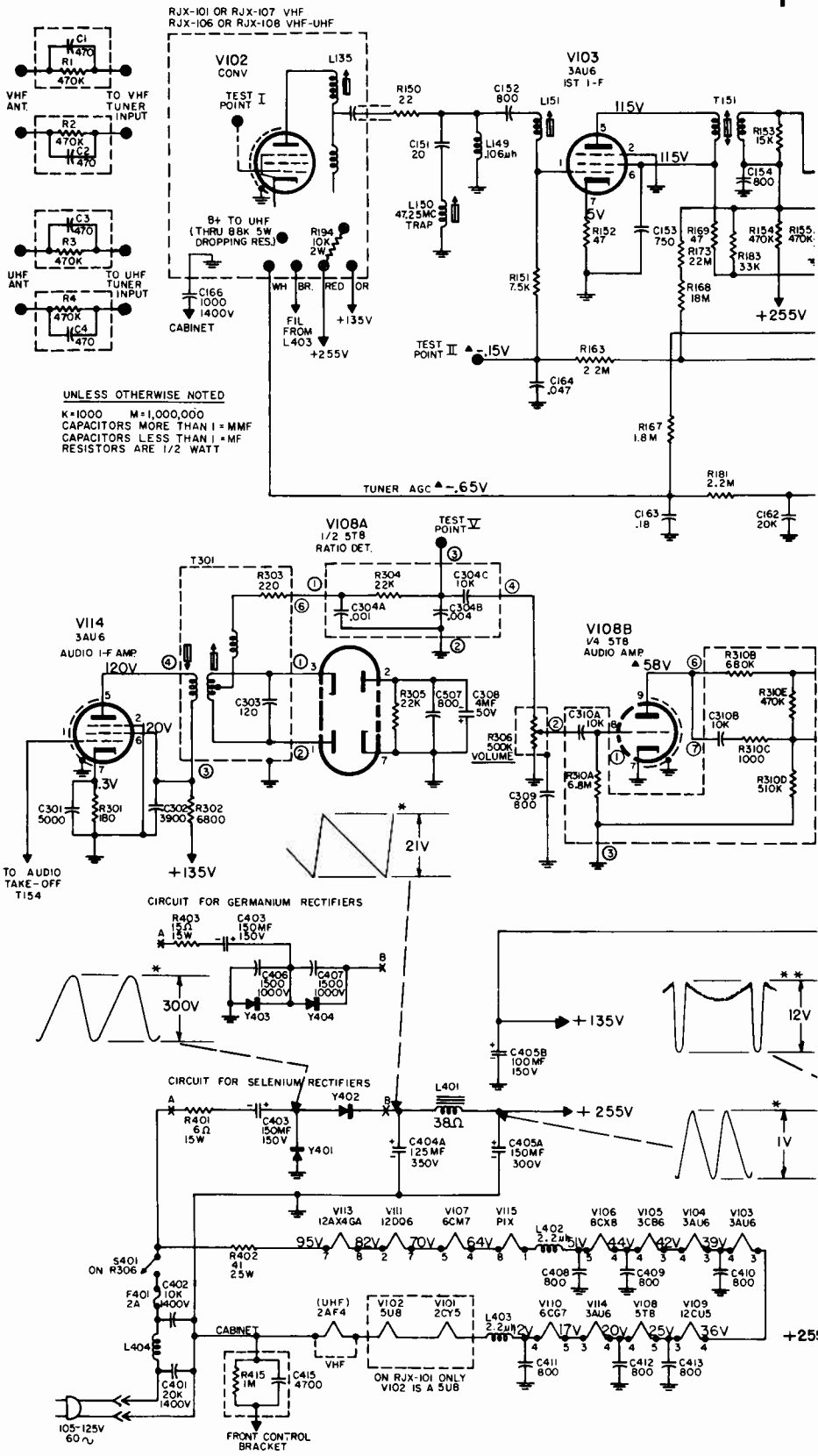

Servicing the component side while utilizing picture and yoke mounted in cabinet may be accomplished by removing the chassis and turning it at an angle to the cabinet (HV cage nearest to cabinet). To do this, however, a picture tube extension lead is needed.

When replacing components, leads should be clipped from the defective part and the new part soldered to the existing leads. Where lead length is short, the part may be cut in half and then the remaining ends broken away from the leads to give extra length. The use of a small soldering iron (not exceeding 50 watts) is recommended as the plating may be affected by excessive heat.

A lever and ring assembly used for picture centering, rest behind the deflection yoke on the yoke flange. Insert a long insulated tool such as alignment screwdriver in the slots on the levers and move the tabs toward or away from each other until picture is centered within the picture mask.

GENERAL ELECTRIC "M3" Line TV Sets, Schematic Diagram of Main Chassis

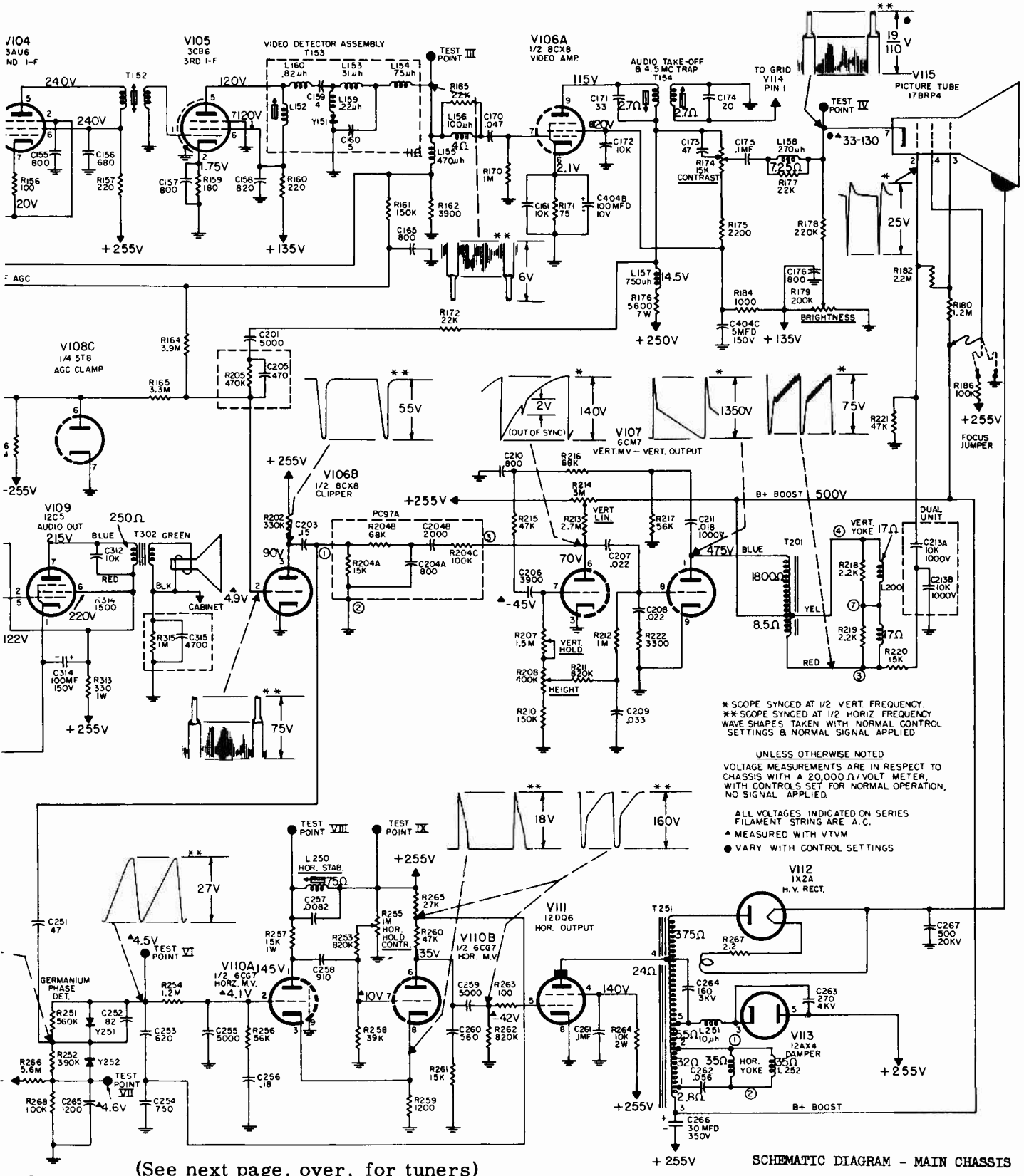

* SCOPE SYNCED AT 1/2 VERT. FREQUENCY.
** SCOPE SYNCED AT 1/2 HORIZ FREQUENCY
WAVE SHAPES TAKEN WITH NORMAL CONTROL SETTINGS & NORMAL SIGNAL APPLIED

UNLESS OTHERWISE NOTED

VOLTAGE MEASUREMENTS ARE IN RESPECT TO CHASSIS WITH A 20,000 Ω/VOLT METER, WITH CONTROLS SET FOR NORMAL OPERATION, NO SIGNAL APPLIED.

ALL VOLTAGES INDICATED ON SERIES FILAMENT STRING ARE A.C.

▲ MEASURED WITH VTVM

● VARY WITH CONTROL SETTINGS

SCHEMATIC DIAGRAM - MAIN CHASSIS

(See next page, over, for tuners)

GENERAL ELECTRIC "M3" Line Schematic Diagrams of Tuners (Continued)

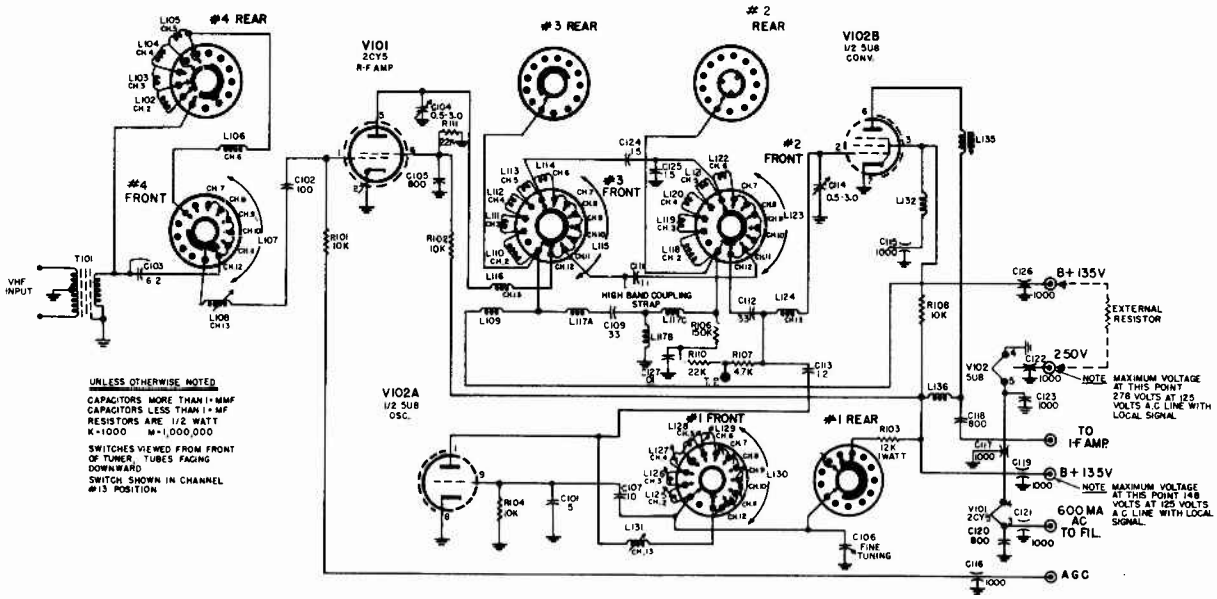

RJX-107 VHF TUNER

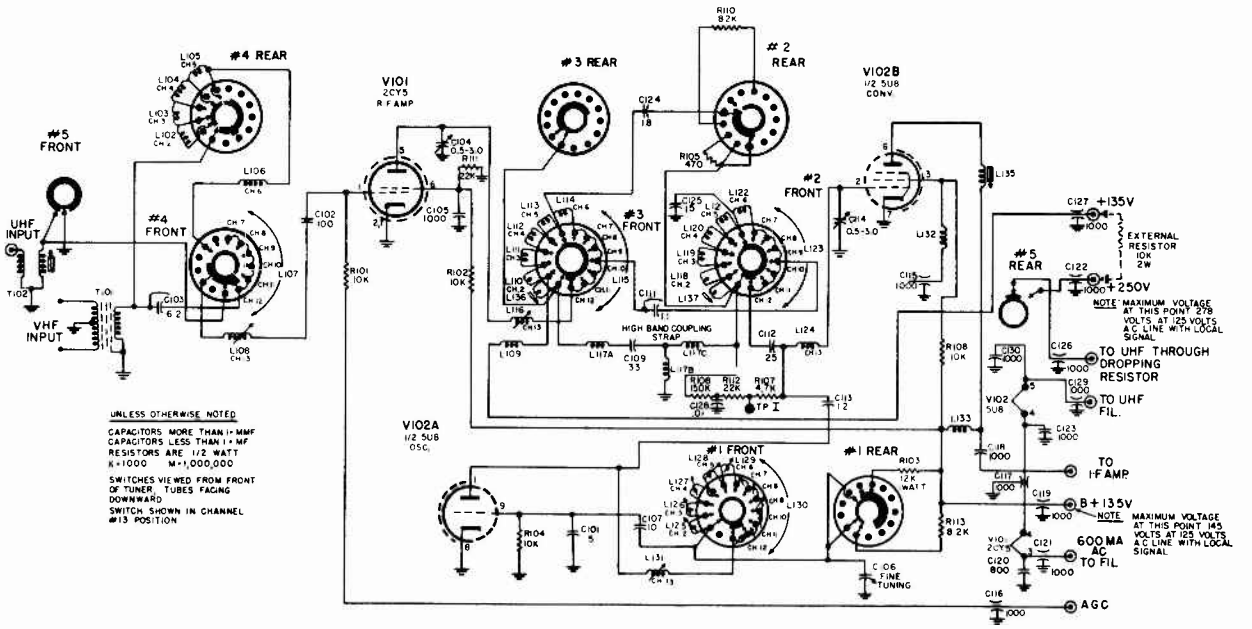

RJX-108 VHF TUNER

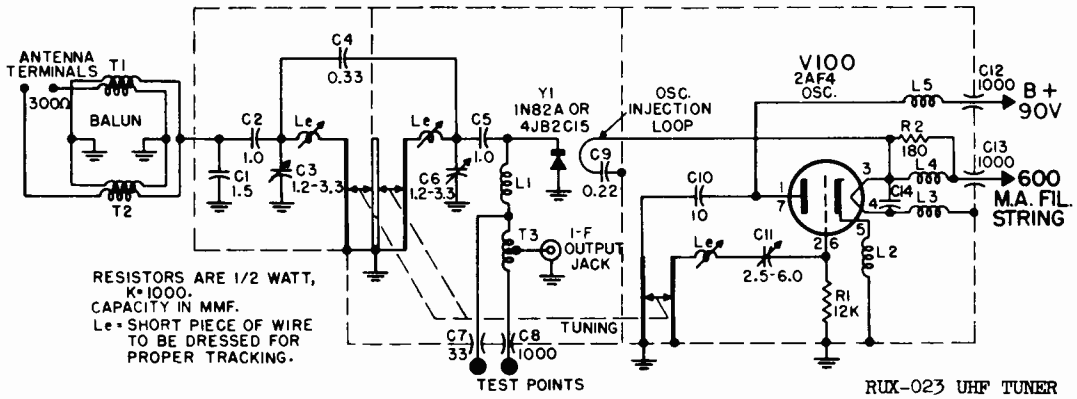

RUX-023 UHF TUNER

GENERAL ELECTRIC

"Q2" Line, Models 14P1209, 14P1210, 14P1211, 14P1212 (also UHF types)

TO REMOVE THE CHASSIS FROM THE CABINET

Remove any antenna leads connected to the antenna terminal board. Remove the screws securing the back to the cabinet and the interlock bracket screw holding the back to the chassis. Remove the back assembly. Remove the knobs from the shafts on the top of the cabinet. Remove the three bottom screws located at the middle and rear of the cabinet bottom. Remove the two Phillips head screws from the top of the cabinet located to the rear of the contrast and brightness control. Extend the outer sections of the telescoping antenna to their full length. Remove the picture tube socket. Tilt the chassis out from the bottom, as viewed from the rear, at the same time slide the chassis out over the neck of the tube. If it becomes necessary to remove the chassis completely away from the cabinet, remove the ion trap. Remove the spring from the open side of the yoke clamp so that the yoke can be slid back over the neck of the tube. The anode should be discharged with a jumper connected first to the chassis and then disconnect the anode lead by squeezing the anode clip. The leads attached to the speaker can be unsoldered from the speaker terminals.

To install the chassis, reverse the above procedure, making sure that the anode and speaker leads are connected and the phosphor bronze terminal which is soldered to the bypass condenser on the tuner is inserted in the bottom of the nylon nut so that the bottom screw secures the terminal to the bottom of the cabinet.

REMOVAL OF THE CABINET FRONT OR PICTURE TUBE FOR CLEANING OR PICTURE TUBE REPLACEMENT

Remove the two bottom screws securing the cabinet front to the cabinet bottom. Remove the two screws located on the top of the cabinet under the cabinet lip. Remove the cabinet front by tilting the front out at the bottom. The picture tube face and safety window may now be cleaned.

To remove the picture tube, the chassis and yoke assembly should be removed as outlined above and the HV anode lead should be discharged and disconnected.

The picture tube is secured by the clamping action of the tube strap assembly against the rim of the picture tube. Loosen the two clamping screws while supporting the rear of the picture tube with one hand slide the tube out through the front of the cabinet. To replace the tube, reverse the above procedure. To replace the cabinet front, the lip on the cabinet top should be locked in the handle support and the bottom of the front then slid into position so that the holes in the bottom of the front line up with the bottom cabinet holes.

Height & Vertical Linearity - These controls R211 and R212 should be adjusted simultaneously to give proper vertical size consistent with good vertical linearity. Final adjustment should be made to allow the picture to extend approximately 1/8 inch beyond the edges of the mask.

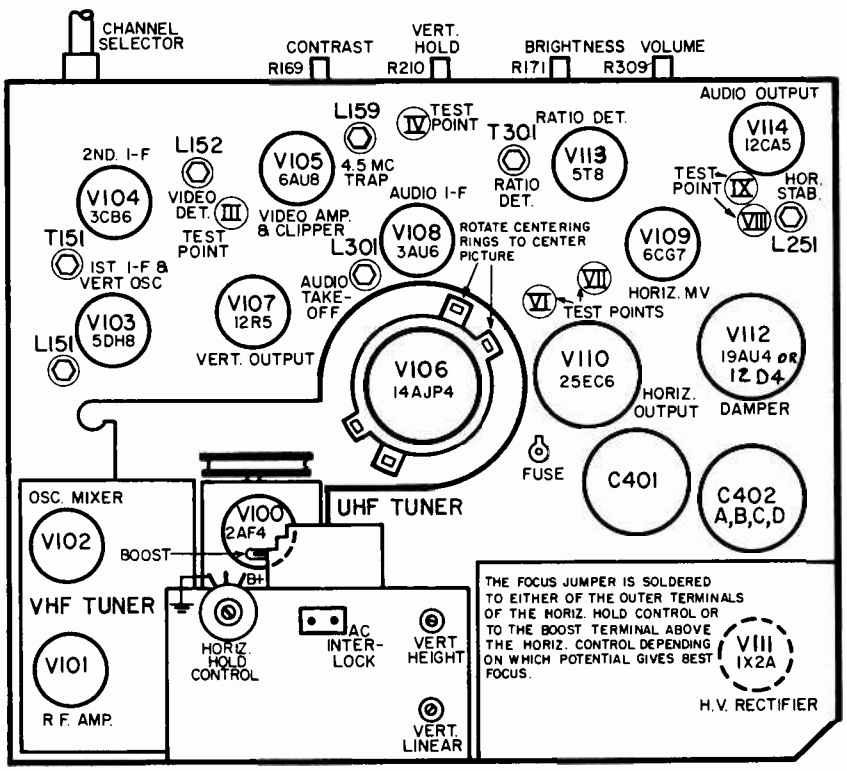

TUBE AND TRIMMER LOCATION

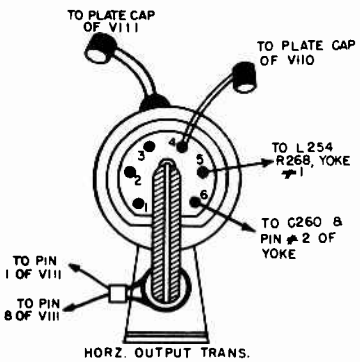

H-V TRANSFORMER

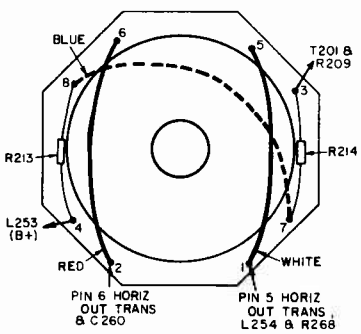

DEFLECTION YOKE

(Schematic diagram on pages 76-77; alignment information on page 78)

GENERAL ELECTRIC "Q2" Line Schematic Diagram

Horizontal Stabilizer Adjustments -

1. Tune receiver to a weak signal and adjust controls for normal operation.
2. Short Test Point VI to VII.
3. Shunt L251 (horizontal stabilizer coil) with 2200 ohms. (Connect resistor between test points VIII and IX.)
4. Adjust horizontal hold potentiometer R261 so that the picture "floats" back and forth across the screen. Leave R261 set like this.
5. Remove 2200 ohm shunt across L251, and adjust L251 so that picture again "floats" back and forth across the screen. Leave L251 set like this.
6. Remove connection from Test Point VI and VII.

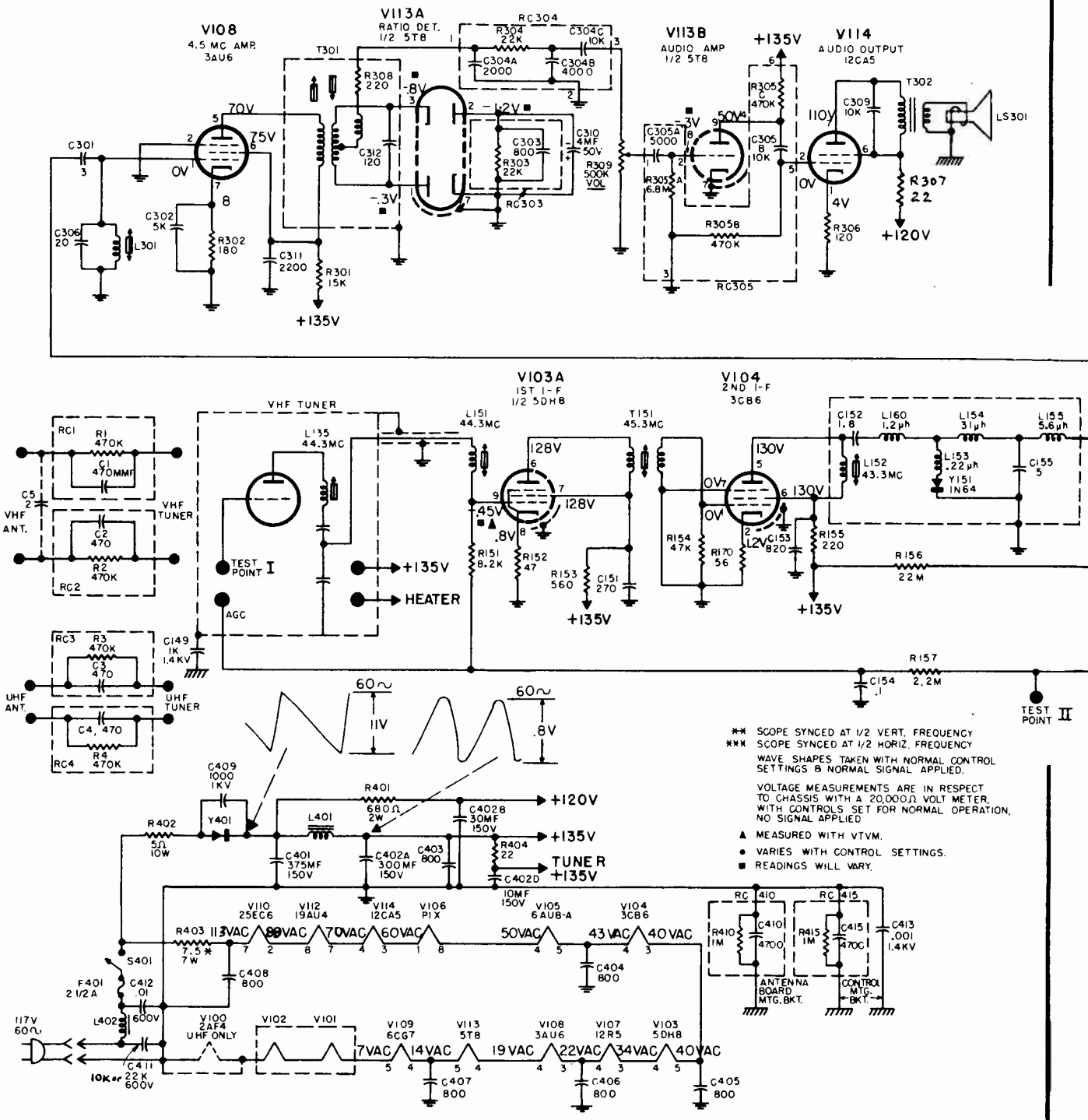

FIGURE 22. SCHEMATIC DIAGRAM, MAIN CHASSIS, WITH VOLTAGES AND WAVESHAPES

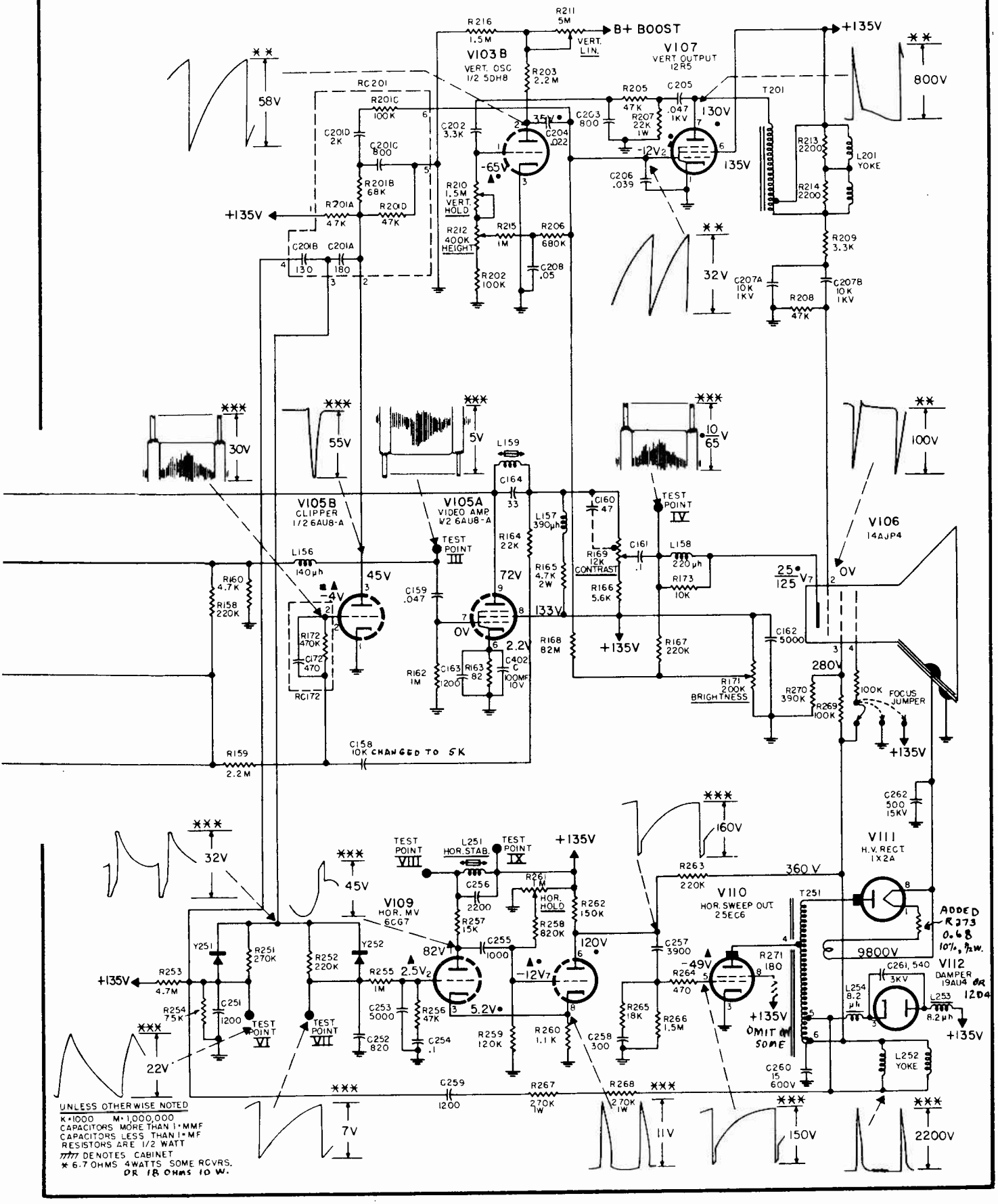
B+ BOOST
VERT. LIN.
V103B
VERT. OSC
1/2 5DH8
V107
VERT OUTPUT
12R5
T201
L201
YOKE
V105B
CLIPPER
1/2 6AU8-A
V105A
VIDEO AMP.
1/2 6AU8-A
V106
14AJP4
TEST POINT III
TEST POINT IV
TEST POINT V
TEST POINT VI
TEST POINT VII
TEST POINT VIII
TEST POINT IX
R169 12K CONTRAST
R171 200K BRIGHTNESS
R269 100K
FOCUS JUMPER
C158 10K CHANGED TO 5K
V109
HOR. MV
6CG7
L251 HOR. STAB.
HOR. HOLD
V110
HOR. SWEEP OUT
25EC6
V111
H.V. RECT
1X2A
ADDED R273 0.68 10%, ½W.
V112
DAMPER
19AU4 OR 12D4
OMIT SOME
L252
YOKE
UNLESS OTHERWISE NOTED
K=1000 M=1,000,000
CAPACITORS MORE THAN 1 MMF
CAPACITORS LESS THAN 1 MF
RESISTORS ARE 1/2 WATT
DENOTES CABINET
* 6.7 OHMS 4 WATTS SOME RCVRS. OR 18 OHMS 10 W.

GENERAL ELECTRIC "Q2" Line Alignment Information (Continued)

VIDEO I-F SYSTEM

INTRODUCTION:

A table of frequencies for pretuning the I-F system by the AM method is given, however, this should be followed by the sweep method for satisfactory alignment.

GENERAL NOTES:

1. Allow receiver and alignment equipment at least 20 minutes of warm up time before proceeding.
2. Turn the volume control to minimum sound output and contrast fully clockwise to maximum. Set channel selector to channel 11 or some other high band channel where oscillator influence is not noted as the fine tuning control is turned.
3. Connect sweep generator to converter stage using a test jig made up of an ungrounded tube shield terminated to ground as specified by the generator manufacturer. Users of General Electric test equipment need not terminate as the attenuater is terminated - See Figure 1.
4. Connect a 3 volt bias battery to test point II with positive battery lead to chassis.
5. Connect the scope through a 22,000 ohm resistor to test point III. Calibrate the vertical gain of the scope for 3 volts peak to peak to give 2 inches of deflection. When aligning, keep 2 inches as the 100% base line. Proceed as follows:

AM Pre-Peaking Frequencies

L135	- 44.3	mc
L151	- 44.3	mc
T151	- 45.3	mc
L152	- 43.3	mc

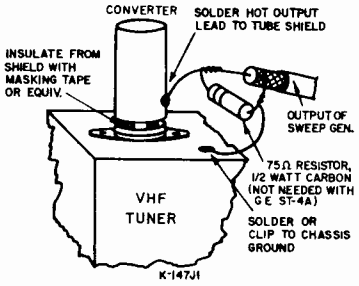

FIGURE 1. I-F SWEEP JIG

VIDEO I-F ALIGNMENT

STEP	ADJUST	DESIRED RESPONSE	REMARKS
1	L152 to set 42.85 mc marker at 50%.	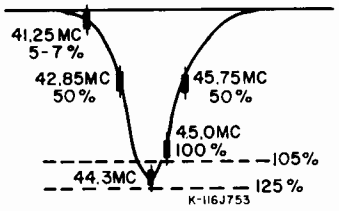	Adjust L135 simultaneously with L151. 41.25 mc marker is very critical and should be kept between limits of 5 to 7%. Peak of curve may fall between limits of 105% and 125% using 45 mc as the 100% reference.
2	T151 to set 45.75 mc marker at 50%		
3	L135 and L151 for peak region symmetry.		

4.5 MC TRAP ALIGNMENT

1. Turn contrast control fully clockwise.
2. Connect detector network (Figure 2) to Test Point IV and set contrast to maximum. Connect oscilloscope to network.
3. Apply a 4.5 mc AM signal through .001mf., to Test Point III.
4. Tune L159 for minimum signal observed on oscilloscope.

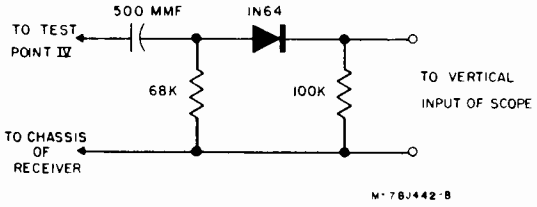

FIG. 2. DETECTOR NETWORK

AUDIO I-F ALIGNMENT

NOTES:

1. Tune in a television signal. This will provide a 4.5 mc signal source for audio i-f alignment.
2. Keep the volume control turned down unless the speaker is connected.
3. Connect two 100,000 ohm resistors (in series) between pin #2 of V113 (5T8) and chassis.

AUDIO ALIGNMENT CHART

STEP	CONNECT VTVM OR 20,000 OHMS/VOLT METER	ADJUST	METER INDICATION	REMARKS
1	Between Pin #2 of V113 and chassis	L301	Adjust for maximum deflection.	Repeat steps 1, 2, and 3 to assure proper adjustments
2		T301 primary	Adjust for maximum deflection.	
3	To terminal 3 of RC304 and the center of the two 100,000 ohm resistors.	T301 secondary	Adjust for zero volts d-c output.	

GENERAL ELECTRIC

"T" Line, Models 9T001, 9T002 (UHF model numbers bear suffix "UHF")
HOTPOINT CO. "T" Line, Models 9S101, 9S102, are identical to the above.

VIDEO I-F SYSTEM

INTRODUCTION:

1. Allow receiver and alignment equipment at least 20 minutes of warm-up time before proceeding.
2. Turn the volume control to minimum sound output and contrast fully clockwise to maximum. Set channel selector to Channel 11 or some other high band channel where oscillator influence is not noted as the fine tuning control is turned.
3. Connect sweep generator to converter stage using a test jig made up of an ungrounded tube shield terminated to ground as specified by the generator manufacturer.
4. Connect a 3-volt bias battery to Test Point II with positive battery lead to chassis.
5. Connect the scope through a 22,000-ohm resistor to Test Point III. Calibrate the vertical gain of the scope for 3 volts peak to peak to give 2 inches of deflection. When aligning, keep 2 inches as the 100% base line. Proceed as follows:

AM PRE-PEAKING FREQUENCIES

L135—44.3 mc
L151—44.3 mc
T151—45.3 mc
L152—43.3 mc

VIDEO I-F ALIGNMENT CHART

STEP	ADJUST	DESIRED RESPONSE	REMARKS
1	L135 and L151 simultaneously for maximum deflection at 44.3 mc	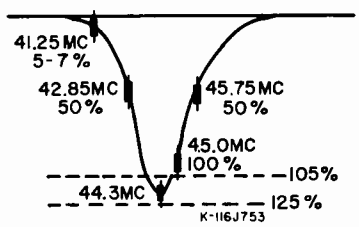	41.25 marker is very critical and should be kept between limits of 5 to 7%. Peak of curve may fall between limits of 105% & 125% using 45 mc as 100% reference.
2	L152 to meet the 41.25 mc & 42.85 mc markers.		Adjustment of this core should move the top of the curve and affected markers into opposite direction.
3	T151 to meet the 45.75 mc marker.		Adjustment of this core should move the top of the curve and the 45.75 marker in opposite directions.
4	L135 and L151 for peak region symmetry.		If adjustment of L151 produces a rocking or "seesaw" movement of the top of the curve around a pivot which is at 44.3 mc ±.4 mc, the coils are properly aligned.

THE AUDIO SYSTEM

INTRODUCTION:

The audio signal is capacity coupled from the plate of the video amplifier, V105B, and a trap L301, to the grid circuit of V108, a pentode which acts as an audio i-f amplifier and limiter. The output of this tube is fed to the ratio detector transformer primary, T301. The ratio detector circuit is a common balanced detector employing the use of dual diodes, Y301 and Y302. The output of this detector is passed thru a suitable compensating network to the volume control, R306, then to a conventional triode audio amplifier, V109A.

GENERAL NOTES:

Allow receiver and alignment equipment at least 15 minutes of warm-up time before proceeding.

1. Tune in a weak television signal. This will provide a 4.5 mc signal source for audio i-f alignment. Keep the volume control turned down unless the speaker is connected.
2. Connect two 100,000-ohm resistors (in series) across R304 and chassis.

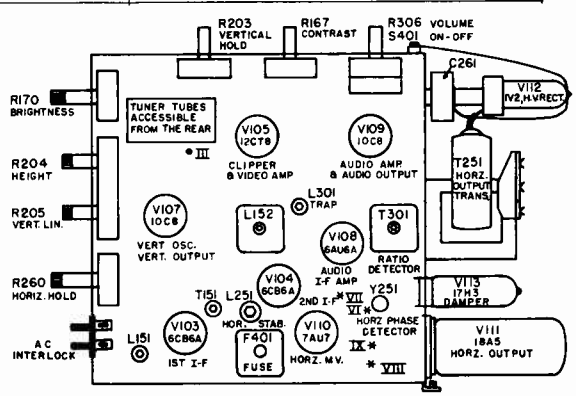

AUDIO ALIGNMENT CHART

STEP	CONNECT VTVM OR 20,000 OHMS/VOLT METER	ADJUST	METER INDICATION	REMARKS
1	Across R304 and chassis	L301	Adjust for maximum deflection.	Repeat steps 1, 2, and 3 to assure proper adjustments.
2		T301 primary (rear)	Adjust for maximum deflection.	
3	Between Term. 1 of RC308 and the center of the two 100,000-ohm resistors.	T301 secondary (front)	Adjust for zero volts d-c output.	

GENERAL ELECTRIC "T" Line, Models 9T001, 9T002, Schematic Diagram

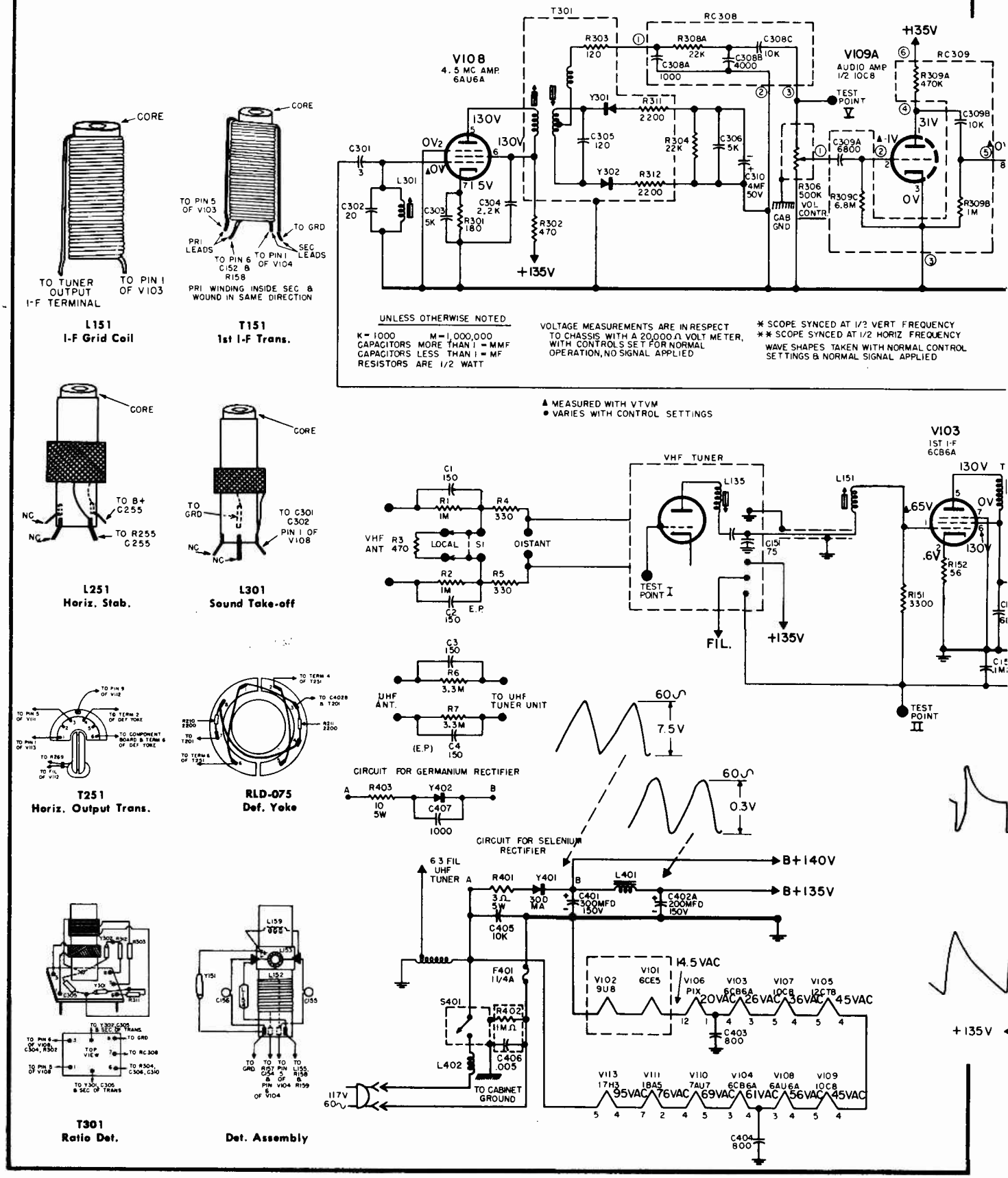

GENERAL ELECTRIC "T" Line, Models 9T001, 9T002, Schematic Diagram

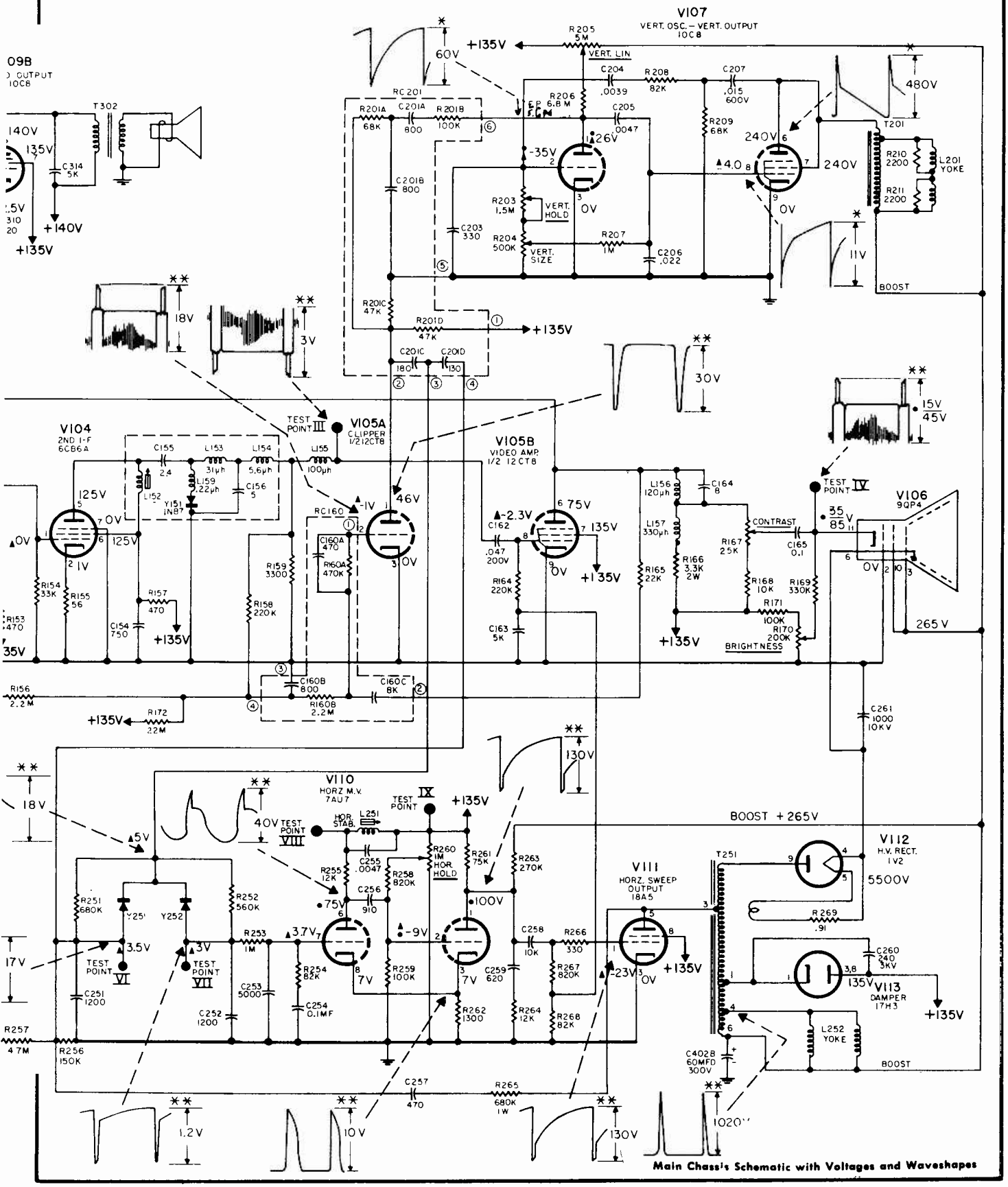

GENERAL ELECTRIC "T" Line, Continued

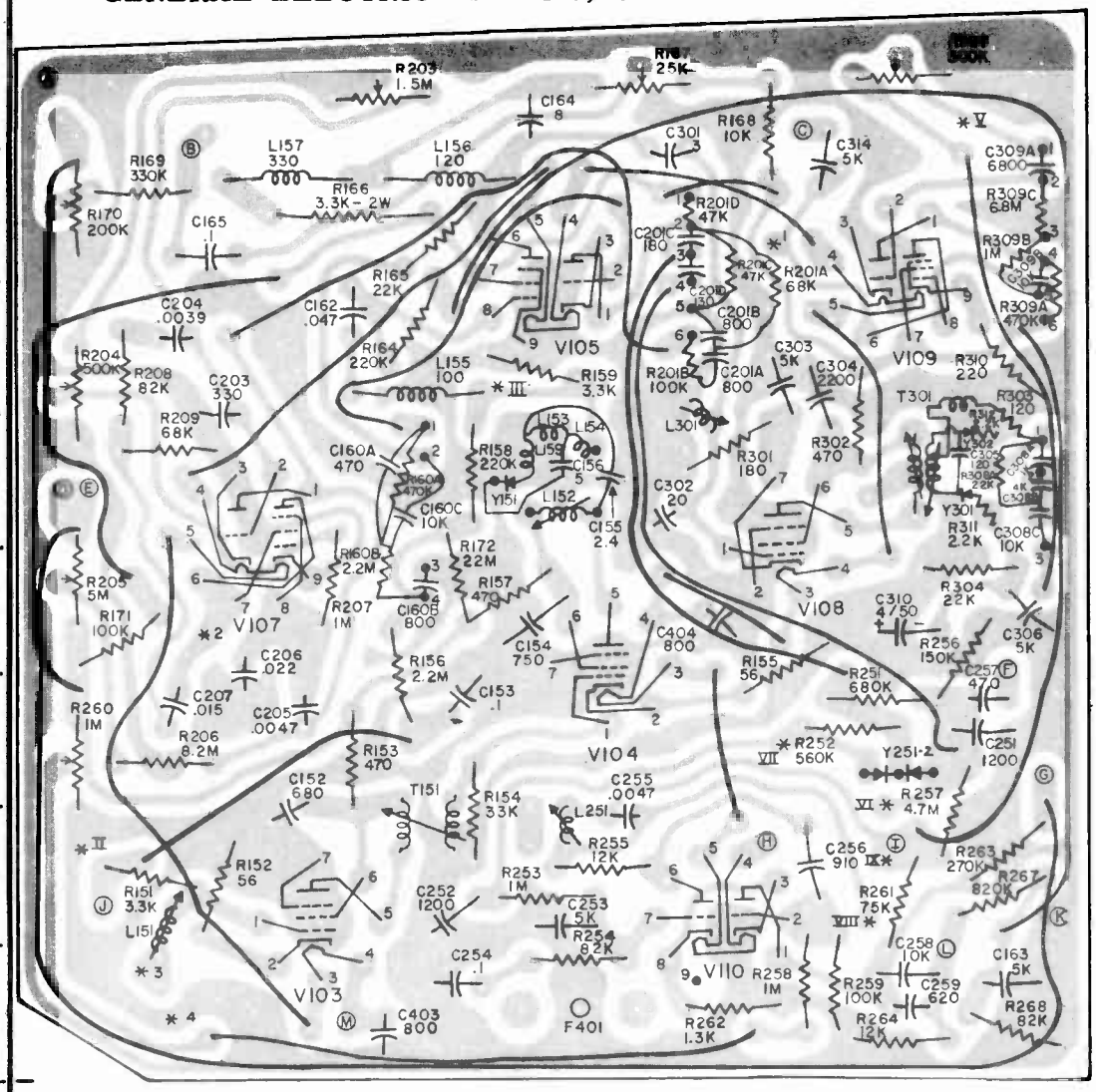

VIEW SHOWS COMPONENTS & WIRING AS MOUNTED ON COMPONENT SIDE OF BOARD

1 | 2 | 3 | 4 | 5 | 6 | 7 | 8

ASTERISKED (✱) NUMBERS

REPRESENT WIRE WRAP TERMINALS MOUNTED ON COMPONENT BOARD FOR CONNECTING WIRES FROM OTHER COMPONENTS

- ✱ 1 TO T302
- ✱ 2 TO T201
- ✱ 3 FROM VHF TUNER-IF OUTPUT
- ✱ 4 GRD. FOR I-F INPUT CABLE SHIELD

CIRCLED (A) LETTERS

REPRESENTS INTERCONNECTING WIRES FROM OTHER COMPONENTS.

- A PIN 2 OF V106
- B PIN 11 OF V106
- C TO Y401
- D PIN 10 OF V106
- E PIN 3 OF V106
- F TO R265
- G TO PIN 6 OF T251
- H TO PIN 2 OF V111
- I TO PIN 8 OF V111
- J TO VHF TUNER-AGC
- K TO PIN 3 OF V111
- L TO R266
- M TO PIN 1 OF V106

UNLESS OTHERWISE NOTED

K = 1000 M = 1,000,000
CAPACITORS MORE THAN 1 = MMF
CAPACITORS LESS THAN 1 = MF
RESISTORS ARE 1/2 WATT
INDUCTANCES IN μh

ASTERISKED (✱) ROMAN NUMBERS

REPRESENT TEST POINTS ON COMPONENT BOARD.

SERVICE AIDS

When replacing the audio ratio detector transformer, it is advised that the soldering be done in the vertical position. This prevents solder flux from running down the mounting lugs into the transformer base and shorting the capacitor in the base of the transformer.

The tube shields have been captivated for the protection of the customer against shock hazard. Always be sure the tube shields are captivated before installing the back. It is wise to check continuity between the chassis and the cabinet to prevent any possibility of shorting.

When replacing the picture tube, the key on the base of the picture tube base should be positioned to the left (towards the tuner) as viewed from the rear.

PRODUCTION CHANGES

During late production the local distant range switch and network was eliminated. In extremely strong signal areas where an attenuator is needed, a local-distant Switch Kit, Catalog No. REM-010, is available. Installation instructions are packed with each kit.

In early production, a capacitor C151 was installed on the main chassis printed board between the i-f tuner input link and ground. Later this capacitor was removed from the chassis printed board and was installed between the i-f output terminal and the shielded link cable on the outside of tuners RJX-084 and RJX-085.

In mid production, this capacitor was removed from outside the tuners and installed on the inside of the tuner between the i-f output terminal and ground, and shown as C122.

In r-f tuner RJX-085 a coupling condenser C111 was removed at Channel 10 and one each was added at Channels 8 and 12. The tie bar gimmick wire was removed. Oscillator injection condenser C113 was changed from 1.2 mmfd. to .68 mmfd. A 1000 mmfd. disk ceramic capacitor (C124) was added between filament pin 4 and ground of the 9U8 (V102).

To improve the vertical linearity R206 originally was 8.2 megohms and was changed to 6.8 megohms. In late production it was changed to 5.6 megohms.

A few hundred sets were produced in which the number of turns was changed on L301 (sound take-off coil). In such instances C302 was deleted. However, if it becomes necessary to replace this later type coil, the former type, Cat. No. RLI-394 should be used and capacitor C302, Cat. No. RCW-3294, should be added.

During late production the horizontal phase detector Y251, a dual selenium rectifier was replaced with two germanium diodes, Y251 and Y252.

GENERAL ELECTRIC "T" Line, Continued

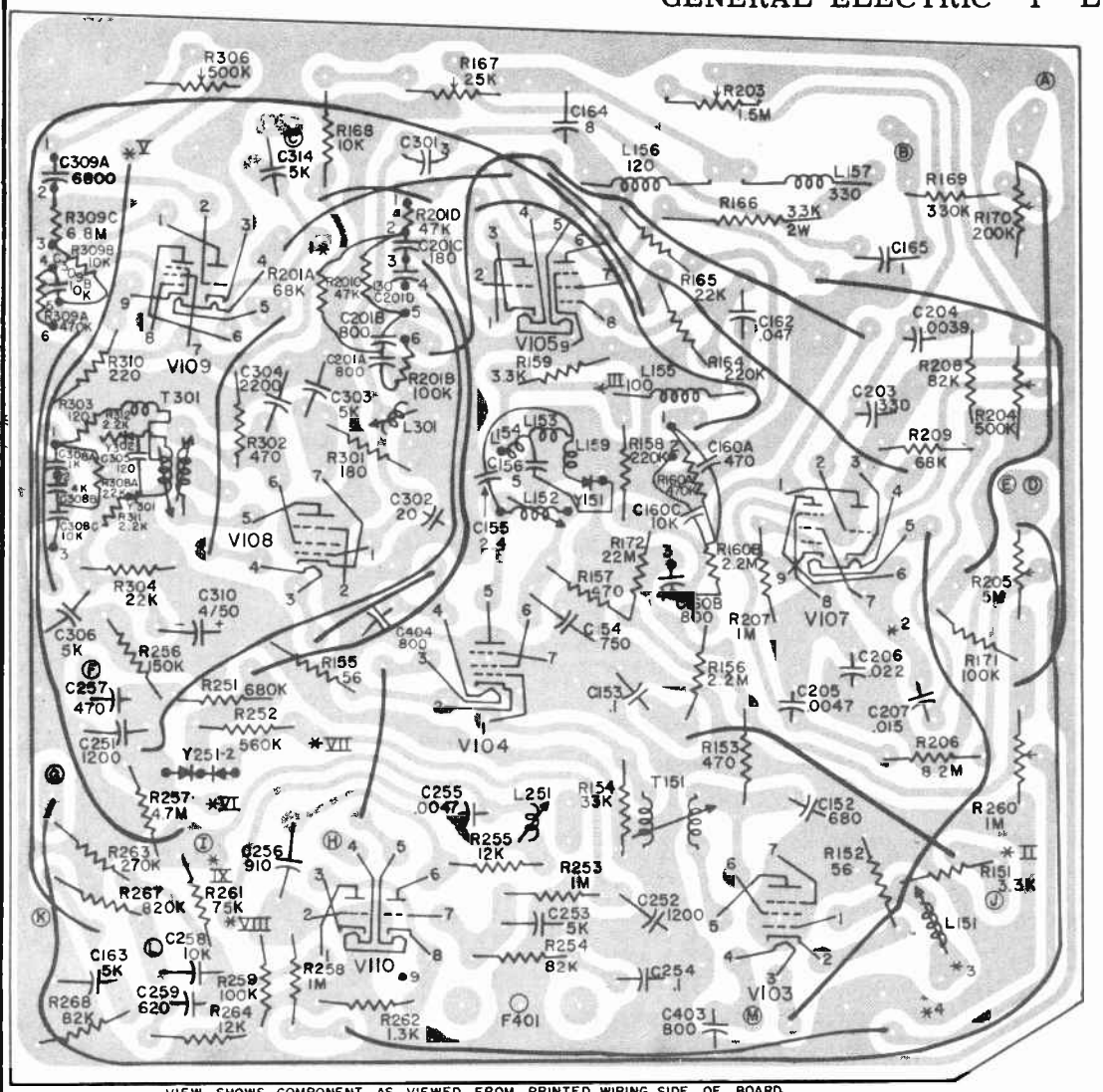

VIEW SHOWS COMPONENT AS VIEWED FROM PRINTED WIRING SIDE OF BOARD

8	7	6	5	4	3	2	1

BY CO-ORDINATES

A3—R203
A4—C164
A5—R167
A6—R168
A7—R306

B1—R169, R170
B2—C165, L157
B3—R166
B4—L156, R165, V105
B5—C301, V105
B6—RC201
B7—C314, V109
B8—RC309, Test Point V

C1—R204, R208
C2—C203, C204
C3—C162, R164, L155
C4—V105, R159, Test Point III
C5—V105
C6—RC201, C303, C304
C7—V109
C8—RC309, R310

D2—R209, V107
D3—RC160
D4—R158, L153, L159, Y151
D5—L154, C156, L152, C155, C302
D6—L301, R301, V108
D7—R302, T301
D8—RC308, Y301, Y302, R303, C305 R311 and R312

E1—R171, R205
E2—V107, C206
E3—R207, R156
E4—R157, R172, C154
E5—V104
E6—R155, C404, V108
E7—C310
E8—R304, R256, C306

F1—R206, R260
F2—V152, C207
F3—R153, C205
F4—C153
F5—V104
F6—Test Point VII
F7—R251, R252, Y251, Test Points V, VI
F8—C257, C251

G1—R151, L151, Test Point II
G2—R152
G3—V103, T151
G4—C252, C253, T151, R154, R253
G5—C255, L251, R255
G6—C256, V110
G7—R257, R261, Test Points VIII and IX
G8—R263, R267

H3—C403
H4—C254
H5—R254, F401
H6—R258, R262
H7—R259, R264, C258, C259
H8—C163, R268

COMPONENT LOCATION

BY SYMBOL

CAPACITORS

C152—F2
C153—F4
C154—E4
C155—D5
C156—D5
C162—C3
C163—H8
C164—A4
C165—B2
C203—C2
C204—C2
C205—F3
C206—E2
C207—F2
C251—F8
C252—G4
C253—G4
C254—H4
C255—G5
C256—G6
C257—F8
C258—H7
C259—H7
C301—B5
C302—D5
C303—C6
C304—C6
C305—D8
C306—E8
C310—E7
C314—B7
C403—H3
C404—E6

COILS

L151—G1
L152—D5
L153—D4
L154—D5
L155—C3
L156—B4
L157—B2
L159—D4
L251—G5
L301—D6

RESISTORS

R151—G1
R152—G2
R153—F3
R154—G4
R155—E6
R156—E3
R157—E4
R158—D4
R159—C4
R169—B1
R170—B1
R171—E1
R172—E4
R203—A3
R204—C2
R205—E1
R206—F1
R207—E3
R208—C1
R209—D2
R251—F7
R252—F7
R253—G4
R254—H5
R255—G5
R256—E8
R257—G7
R258—H6
R259—H7
R260—F1
R261—G7
R262—H6
R263—G8
R264—H7
R265—E8
R266—H7
R267—G8
R268—H8
R301—D6
R302—D7
R303—D8
R304—E8
R306—A7
R310—C8
R311—D8
R312—D8

RC ASSEMBLIES

RC160—D3
RC201—B6, C6
RC308—D8
RC309—D8, C8

TRANSFORMERS

T151—G3, G4
T301—D7

TEST POINTS

II—G1
III—C4
V—B8
VII—F6
VIII—G7
IX—G7

TUBES

V103—G3
V104—E5, F5
V105—B4, B5, C4, C5
V107—D2, E2
V108—D6, E6
V109—B7, C7
V110—G6

DIODES

Y151—D4
Y251—F7
Y301—D8
Y302—D8

MISC.

F401—H5

GENERAL ELECTRIC "T" Line, Trouble Shooting Suggestions (Continued)

SYMPTOM	CHECK FOR
DEFECTS OF THE SYNC SECTION	
A. Weak or no horizontal sync; vertical sync, picture and sound satisfactory	1. Defective phase detector 2. Open capacitors in RC201 network 3. Open resistor, R253 4. Defective sweep components, R255, C253, C254, C256 5. Defective coil, L251
B. Weak or no composite sync, otherwise picture and sound normal	1. Defective V105A 2. Open R201D 3. Defective RC160 network
C. No vertical sync, horizontal sync satisfactory	1. Defective V107 2. Defective integrating components RC201 network 3. Defective C203 4. Defective feed-back components C205, C206, R203, R204, R205
D. "Gear Tooth" effect	1. Open or low value, C254 2. Open or high resistor, R254
DEFECTS OF THE HORIZONTAL DEFLECTION CIRCUITS	
A. Inadequate picture width	1. Defective or weak, V110, V111, V112 2. Incorrect waveshape of driving pulse on grid of V111 3. Low B+ from power supply 4. Defective output transformer, T251 5. Leaky capacitor, C258
B. Single vertical line in center, sound normal	1. Open horizontal deflection coils, L252
C. Poor horizontal linearity, bright vertical bars, inadequate width	1. Defective yoke coils, L252 2. Defective damper, V112 3. Defective output transformer, T251
D. Black "beady" vertical line or lines, receiver normal otherwise	1. Defective output tube, V111 2. Defective yoke coils, L252 3. Defective output transformer, T251
E. No raster, sound satisfactory	1. Defective tubes—V110 horizontal multivibrator, V111 horizontal output, V112 H.V. rectifier, V113 damper 2. Defective output transformer, T251 3. Defective horizontal oscillator components
DEFECTS OF THE VERTICAL DEFLECTION CIRCUIT	
A. Poor vertical linearity, inadequate height, foldover at bottom	1. Low emission of vertical output tube, V107 2. Defective vertical output transformer, T201 3. Low B+ from power supply
B. Inadequate picture height	1. Defective vertical tube, V107 2. Low plate voltage on output tube, B+ boost low 3. Change of value of R206
C. No vertical deflection	1. Defective vertical tube, V107 2. Open vertical deflection coils, L201 3. Open vertical output transformer, T201
MISCELLANEOUS DEFECTS	
A. No raster, sound satisfactory	1. Defective picture tube, V106 2. No voltage on first anode of picture tube (B+ boost) pin 10 3. No high voltage. Check horizontal section 4. High bias on cathode of picture tube
B. Brightness control partially or completely inoperative	1. Defective brightness control, R170 or associated components 2. Leaky capacitor, C165 3. Cathode to grid leak in picture tube, V106
C. Intermittent streaks	1. High voltage arcing or corona discharge 2. Interference in video signal
D. Herringbone or diagonal lines across picture	1. FM disturbance or other I.F. interference
E. Poor focus	1. Ion trap adjustment
F. Picture blooms	1. Defective H.V. rectifier, V112 2. Defective picture tube, V106 3. Low value C402B

GENERAL ELECTRIC

"U2" Line, Models 21C1540, 21C1541, 21C1542, 21C1550, 21C1551 (and UHF types)

(Service material below and on the next seven pages.)

PRESET ADJUSTMENTS:

It is recommended that the receiver be permitted to operate for at least 15 minutes at low brightness before the final raster adjustments are made. Refer to Figure 1.

Height & Vertical Linearity - These controls R213 and R217 should be adjusted simultaneously to give proper vertical size consistent with good vertical linearity. Final adjustment should be made to allow the picture to extend approximately 1/8 inch beyond the edges of the mask.

Horizontal Stabilizer Adjustments -

1. Tune receiver to a weak signal and adjust controls for normal operation.
2. Short Test Point VI to ground.
3. Shunt L250 (horizontal stabilizer coil) with 1000 ohms. (Connect resistor between Test Points VIII and IX.)
4. Adjust horizontal hold potentiometer R257 so that the picture appears upright and just "floats" back and forth across the screen. Leave R257 set like this.
5. Remove the 1000 ohms shunt across L250, and adjust L251 so that the picture again "floats" back and forth across the screen. Make no further adjustments.
6. Remove the short connection from between Test Point VI and ground.

CAUTION: DO NOT REMOVE 6CG7 HORIZONTAL OSCILLATOR WITH SET TURNED ON. DAMAGE TO 6DQ6A TUBE WILL RESULT. BEFORE REPLACING 6DQ6A, FIRST CHECK 6CG7 TO PREVENT DAMAGE TO NEW TUBE.

PICTURE TUBE ADJUSTMENTS

Yoke Position - The yoke is secured to the neck of the picture tube by a U shaped clamp, Figure 7, which has an expansion spring fastened to it. The end of the clamp is bent so that the spring can be slid over the clamp to the first bend. With a pair of long nose pliers, release the spring to the first notch. Adjust the yoke to correct for picture tilt and to square the picture in the mask. The end of the spring should then be moved to the second bend to firmly secure the yoke to the neck of the picture tube.

Picture Centering - The picture centering device is located on the rear of the yoke assembly. The two tabs through which holes have been punched should be rotated towards or away from each other to center the picture on the face of the tube. The holes are provided in the tabs so that an alignment tool or pencil tip can be inserted in them to provide an easy means of rotating the rings.

Focus -The proper focus potential for each tube is chosen at the time of manufacture. Should it become necessary to change the picture tube or the focus, three focus potentials are available on the main component board. These voltages are ground, B+ Boost, and low B+ Boost, located as shown on Figure A and the component board view

Unsolder the focus lead connector and move it to the desired terminal, observing the face of the tube. B+ should not be selected as possible internal tube arcing will cause damage to the receiver.

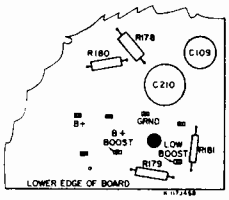

FIGURE A. FOCUS VOLTAGE LOCATIONS

Ion Trap - Power to the receiver should not be applied for extended periods of time without proper adjustment to the ion trap. This adjustment is more critical than heretofore encountered sets and, therefore, considerable emphasis should be placed on its positioning as misadjustment can seriously affect the focus of the picture. Carefully rotate and slide the ion trap on the neck of the picture tube while observing the picture and particularly the spot size. Move the trap to the position where maximum brightness is obtained without neck shadow and consistant with good focus. Keep the brilliance low while making this adjustment.

TO REMOVE THE CHASSIS AND PICTURE TUBE

Should it become necessary to remove the chassis and picture tube for service or replacement, the following procedure should be followed. Refer to Figure 1.

1. Remove any antenna connected to the rear antenna terminals and then remove the cabinet back.
2. Remove all knobs from the front of the cabinet.
3. Remove the two nuts from the studs located on the front top and bottom, at the right side of the picture tube as viewed from the rear. Remove the four screws from the bottom of the cabinet securing the main chassis.
4. Disconnect the speaker leads in models where the speaker is mounted to the cabinet.
5. Slide the chassis and tube assembly out of the cabinet. To gain additional access to the main chassis solder points, remove the three nuts (one at the top and two at the bottom) which secure the tube mount to the chassis. The chassis can then be moved away from the tube for easier service.

TO REMOVE THE PICTURE TUBE

1. Remove the tube and chassis assembly as outlined above.
2. Disconnect the tube socket and high voltage connector. Remove the ion trap, centering rings and yoke from the neck of the tube.
3. Loosen the nut on the spade bolt securing the picture tube in the tube strap. Always support the tube while making adjustment or during removal.

To replace the tube, reverse the order outlined remembering the anode connector is positioned to the right as viewed from the rear.

GENERAL ELECTRIC "U2" Line, Alignment Information

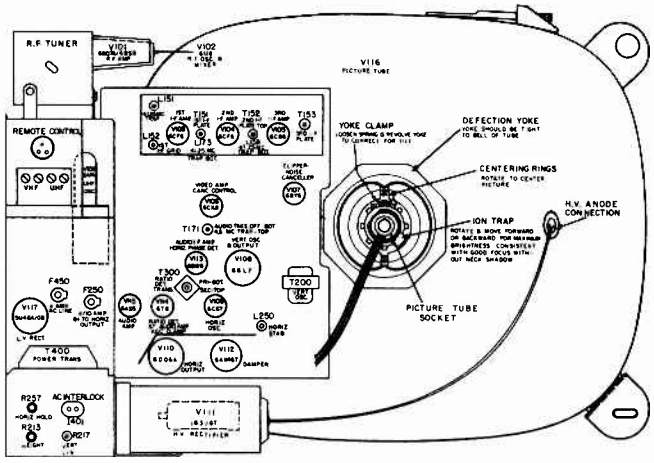

FIG. 1. LOCATION OF TUBES, TRIMMERS & ADJUSTMENTS

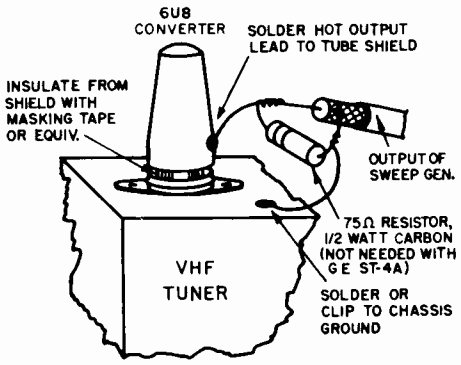

FIG. 2. I-F SWEEP JIG

VIDEO I-F ALIGNMENT

The alignment of the I-F system involves the adjustment of 3 traps and 5 pass band tank circuits. Allow at least 15 minutes warm-up for the receiver and test equipment before proceeding. Follow the usual precautions regarding equipment termination and cable dress. Some tuning cores will apparently go through two peaks. In all cases, the cores should be tuned to the first peak starting from the "out" position. Adjustment locations are indicated in Figure 1.

Notes:

1. Set channel selector to Channel 11 and volume control to minimum. Turn fine tuning control fully counterclockwise. Set contrast control fully clockwise.
2. Connect sweep generator to capacity type jig shown in Figure 2. If General Electric sweep equipment is used, the indicated resistor should be omitted.
3. Connect a 3-volt battery from Test Point II to chassis (positive battery lead to chassis).

AM PREPEAKING FREQUENCIES

L135	44.5 mc
L151 trap	47.25 mc
L152	44.5 mc
L159 trap	47.25 mc
L173 trap	41.25 mc
T151	45.25 mc
T152	42.9 mc
T153	44.15 mc

4. Remove horizontal sweep output tube V110.
5. Connect scope through 10,000 ohms to Test Point III. After Step 1 (below), calibrate vertical gain of scope for 5-volts peak-to-peak for 2-inch deflection. When aligning, base line to 45 mc marker should be kept at 2 inches. Refer to prepeaking chart if alignment difficulty is experienced but sweep alignment method should be performed for correct alignment. Align as follows:

VIDEO I-F ALIGNMENT CHART

STEP	ADJUST	DESIRED RESPONSE	REMARKS
1.	L151, L159 for minimum at 47.25 mc.	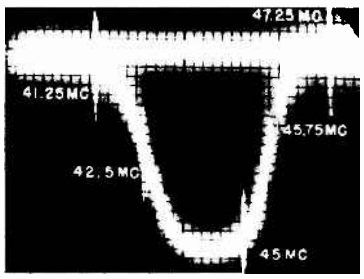	"Blow-up" scope pattern to see traps. After setting traps, set scope gain per above. L159 slug should be positioned at resonant point nearest chassis. T151, T152, T153 should be set first. L135 and L152 should be adjusted to set 45.75 mc marker at maximum from base line.
2.	L173 for minimum at 41.25 mc.		
3.	T151 to set 42.5 mc marker at 65%.		
4.	T152 to set 45.75 mc marker at 40%.		
5.	T153 for peak region symmetry. (tilt)		
6.	Set L135 & L152 to place 45.75 mc at maximum from base line.		

4.5 MC TRAP ALIGNMENT

1. Turn contrast control fully clockwise.
2. Connect detector network (Figure 3) to Test Point IV and set contrast to maximum. Connect oscilloscope to network.
3. Apply a 4.5 mc AM signal through .001 mf. to Test Point III.
4. Tune the bottom core of T171 for minimum signal observed on oscilloscope.

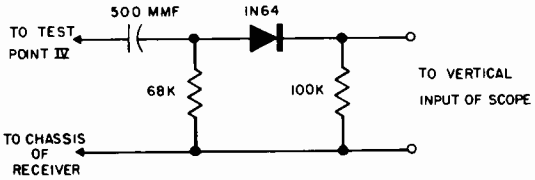

FIG. 3. 4.5 MC DETECTOR NETWORK

GENERAL ELECTRIC "U2" Line, Waveforms and Alignment Information Continued

AUDIO I-F ALIGNMENT

1. Tune in a television signal. This will provide a 4.5 mc signal source for audio I-F alignment. Keep the volume control turned down unless the speaker is connected.
2. Connect two 100,000 ohm resistors (in series) between Pin 2 of V114 (6T8) and chassis.

AUDIO ALIGNMENT CHART

STEP	CONNECT VTVM OR 20,000 OHMS/VOLT METER	ADJUST	METER INDICATION	REMARKS
1.	Between Pin 2 of V114A and chassis.	T171 secondary (top)	Adjust for maximum deflection.	Repeat Steps 1, 2, and 3 to assure proper alignment.
2.		T300 primary (bottom)	Adjust for maximum deflection.	
3.	Between Test Point V and the center of the two 100,000 ohm resistors. Note 2.	T300 secondary (top)	Adjust for zero volts d-c output.	

The following waveshapes were photographed from a General Electric ST2A Oscilloscope and the locations of the points described are shown on Figure 14.

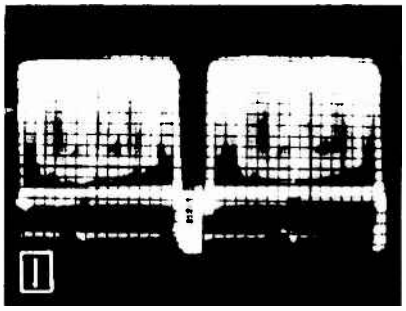

1. Video information Test Point III. 4.3 V p-p Scope at 1/2 horizontal frequency.

2. Video information at Test Point IV. 18V min. 107V max. p-p. Scope set at 1/2 the horizontal frequency.

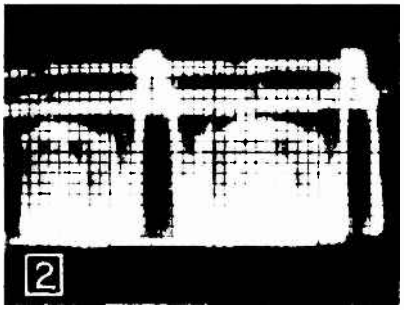

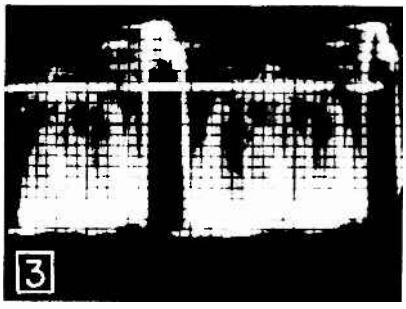

3. Video information on Pin 7, V107 - 70 V p-p Scope at 1/2 horizontal frequency.

4. Information on Pin 1, V107 - 70 V p-p Scope at 1/2 horizontal frequency.

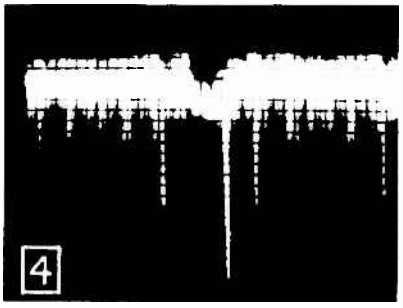

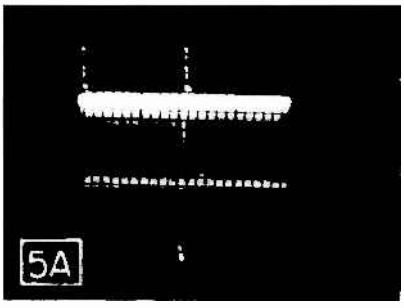

5A. Test Point VII clipper plate 120 V p-p Scope set at 1/2 the vertical frequency.

5B. Test Point VII clipper plate 60 V p-p scope set at 1/2 the horizontal frequency.

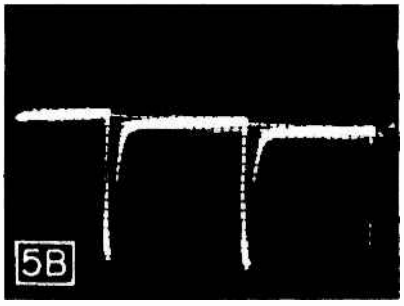

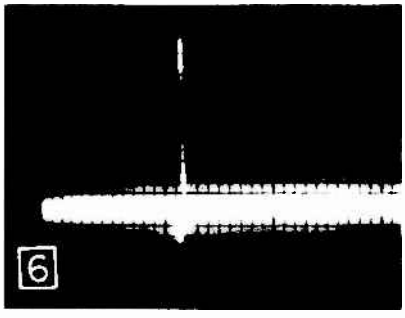

6. Vertical oscillator in sync condition - 140 V p-p Scope at 1/2 vertical frequency

6C. Vertical oscillator out of sync condition at junction of T200, C205. Large pulse 130V p-p small pulse 50V p-p. Scope set at 1/2 vertical frequency.

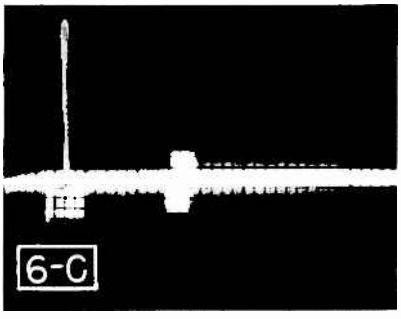

GENERAL ELECTRIC "U2" Line, Waveforms Continued

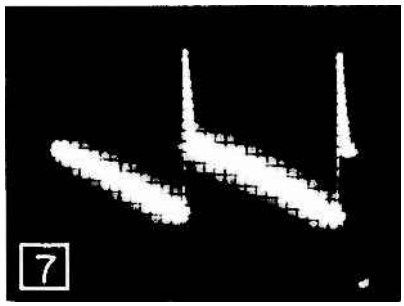

7.

Pin 2 V108B 900 V p-p Scope at 1/2 vertical frequency.

8.

Vertical blanking pulse 50 V p-p scope at 1/2 vertical frequency

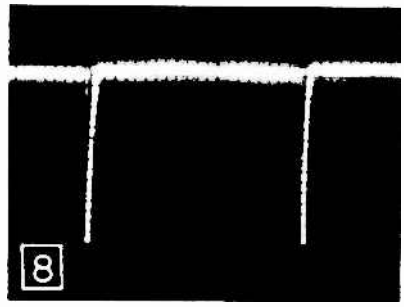

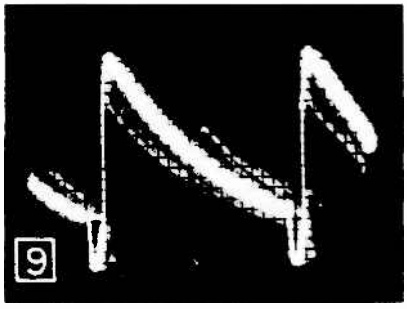

9.

Pin 2 V113 Horizontal Phase Detector 21V p-p Scope at 1/2 horizontal frequency.

10.

Pin 1 V113 Horizontal Phase Detector 15V p-p Scope at 1/2 horizontal frequency.

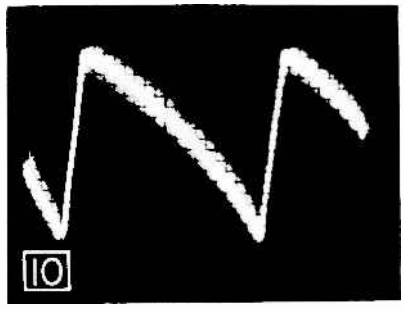

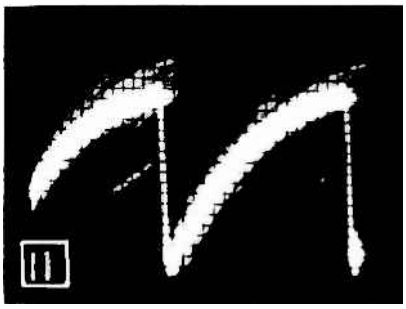

11.

Test Point VL Horizontal Phase Detector 3.5V p-p Scope at 1/2 horizontal frequency.

12.

Pin 1 V109 Horizontal Osc. 51V p-p Scope at 1/2 Horizontal frequency.

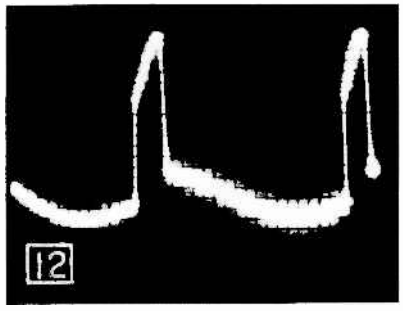

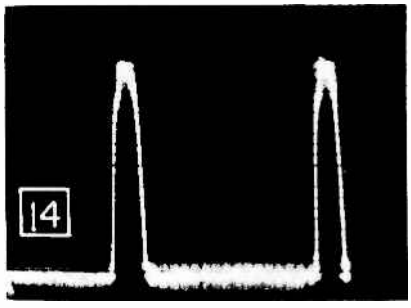

14.

Terminal 6 of T250 Horizontal Output Transformer 280V p-p Scope at 1/2 horizontal frequency.

15.

Pin 5 V110 Horizontal Output 175V p-p Scope at 1/2 horizontal frequency.

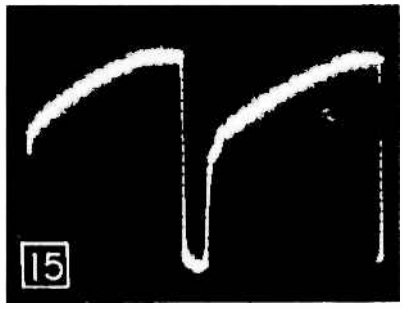

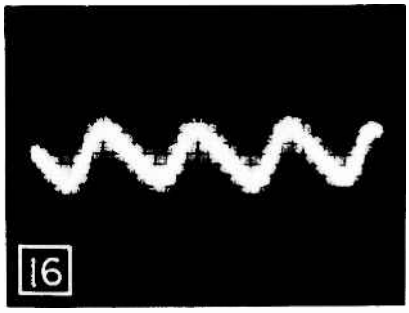

16.

Pin 8 V117 Rectifier 16V p-p Scope at 120 cycles.

17.

Test Point X B+ .5V p-p Scope at 120 cycles.

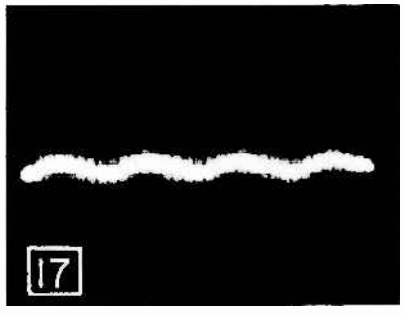

GENERAL ELECTRIC "U2" Line, Component Location Illustration

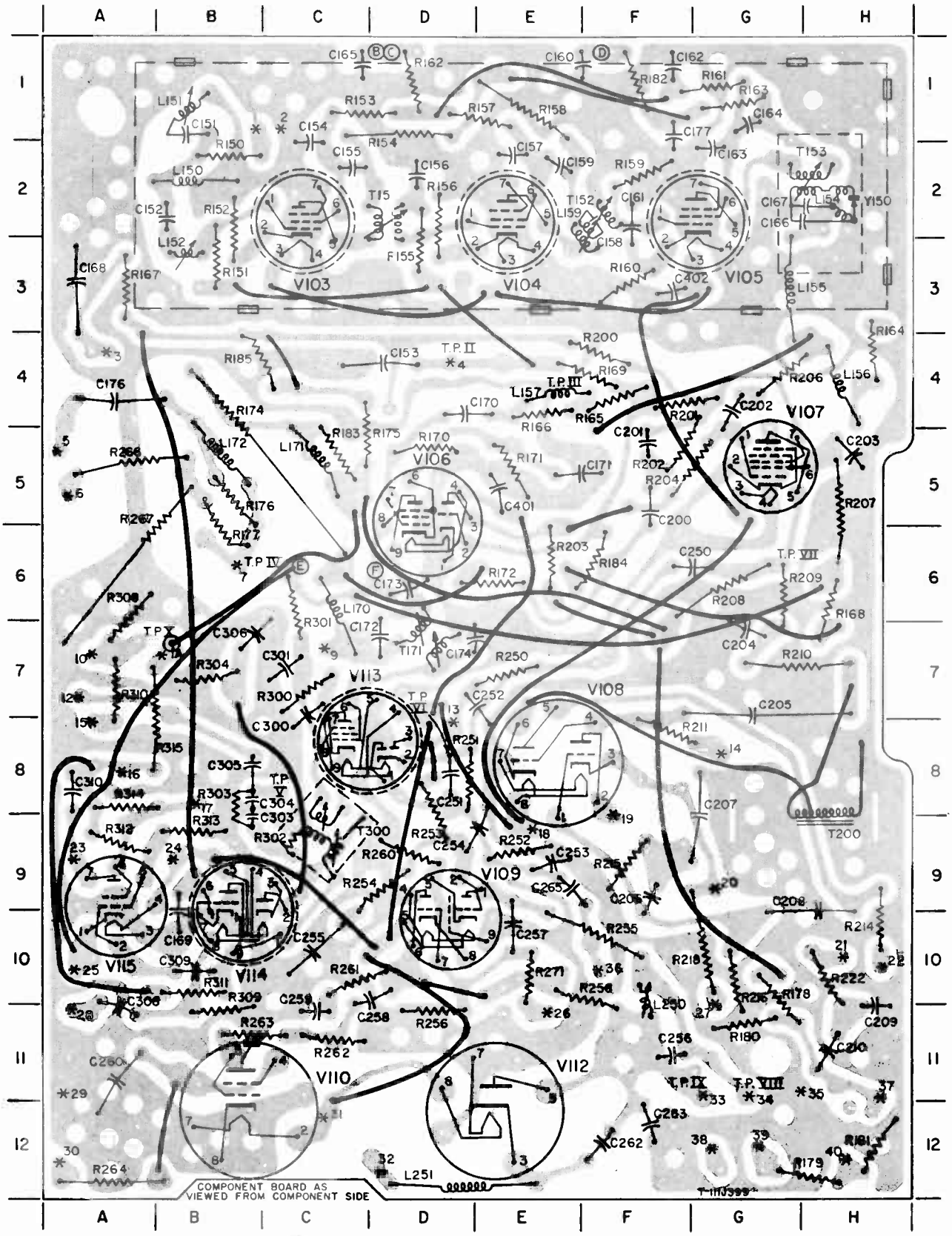

COMPONENT LOCATION VIEWED FROM COMPONENT SIDE

GENERAL ELECTRIC "U2" Line, Schematic Diagram
Models 21C1540, 21C1541, 21C1542, 21C1550, 21C1551

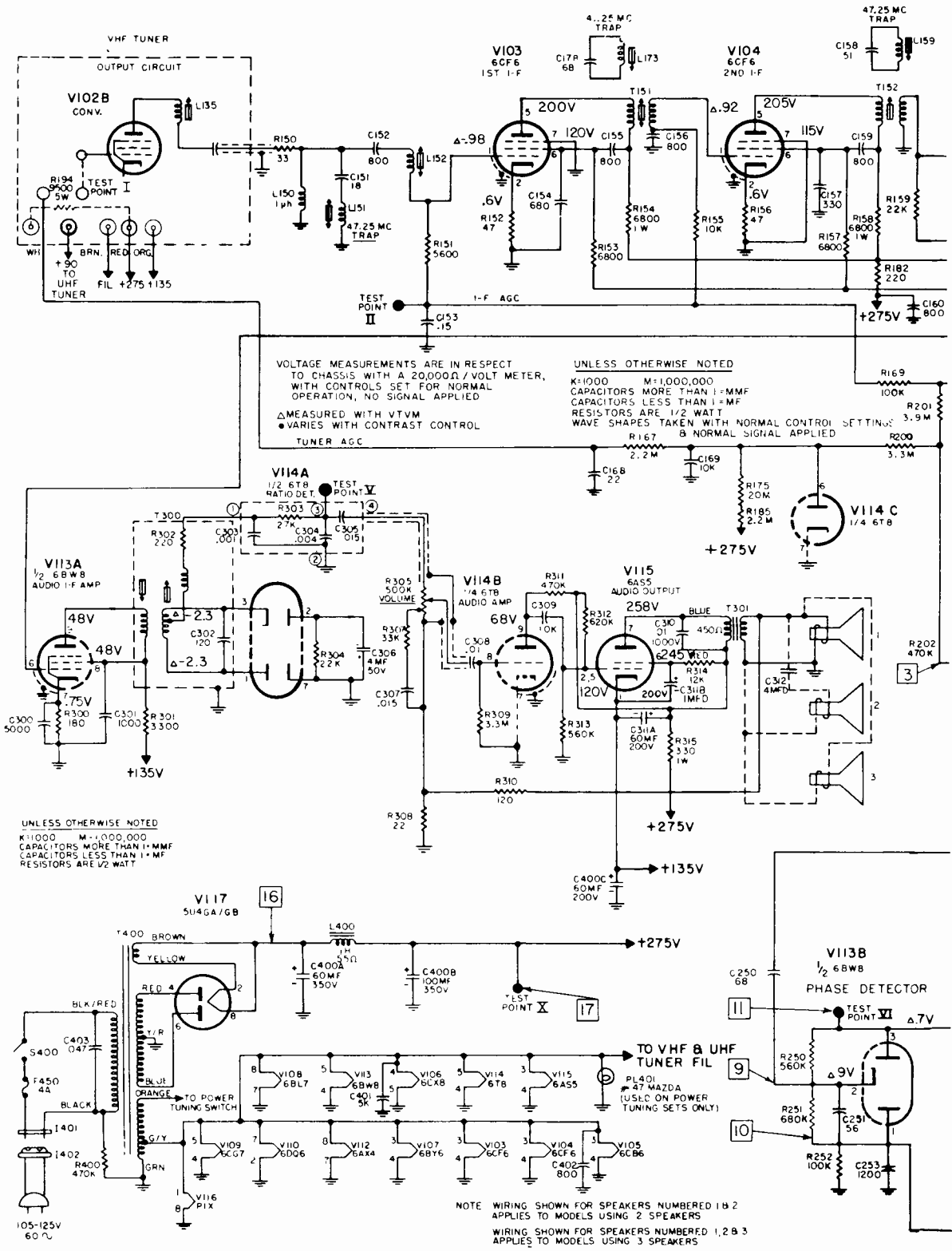

FIGURE 14. MAIN CHASSIS SCHEMATIC WITH VOLTAGES AND LOCATIONS OF WAVESHAPES

GENERAL ELECTRIC "U2" Line, Schematic Diagram
Models 21C1540, 21C1541, 21C1542, 21C1550, 21C1551

(For waveforms see illustrations on preceding pages.)

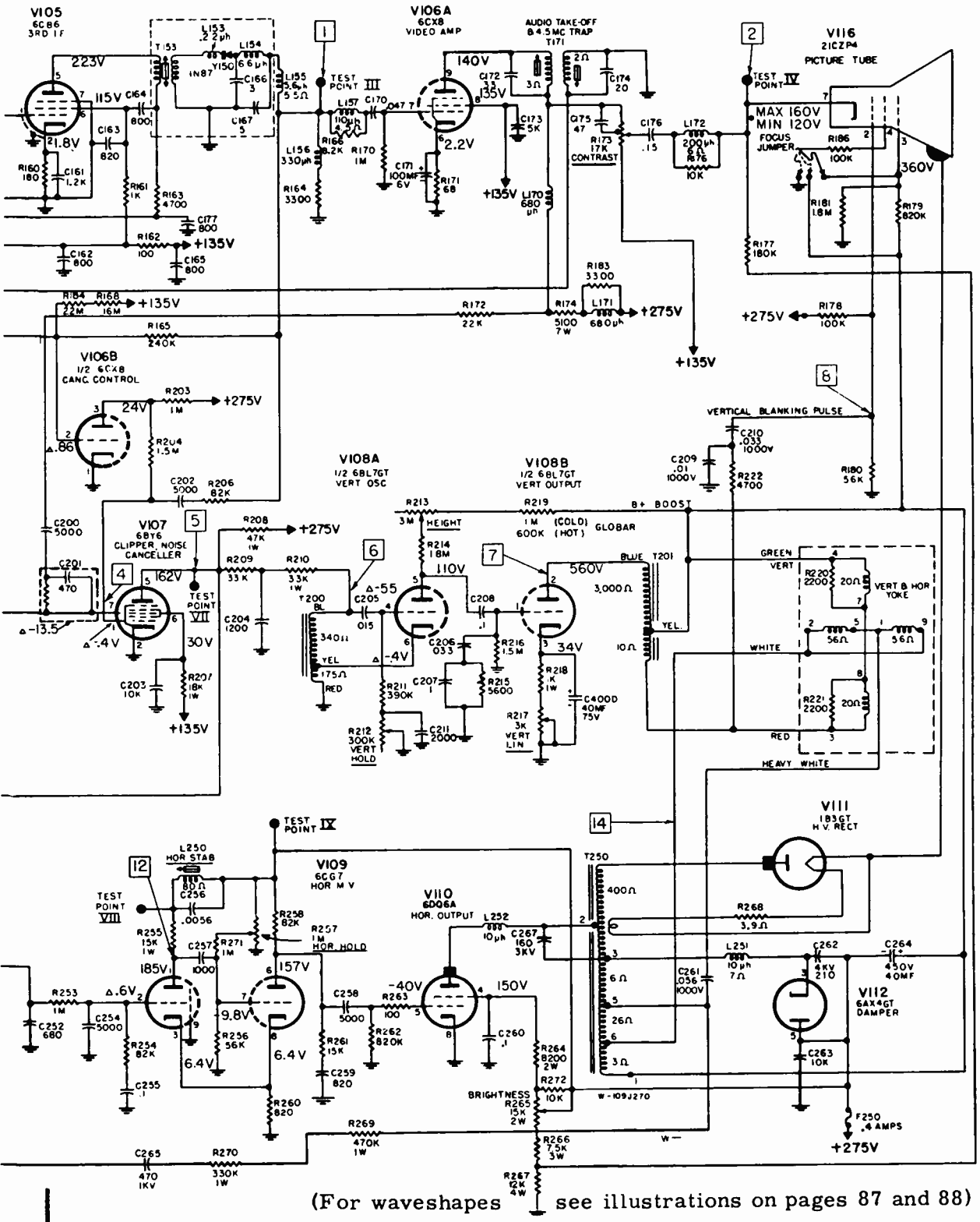

(For waveshapes see illustrations on pages 87 and 88)

GENERAL ELECTRIC "U2" Line, Component Location Illustration (Continued)

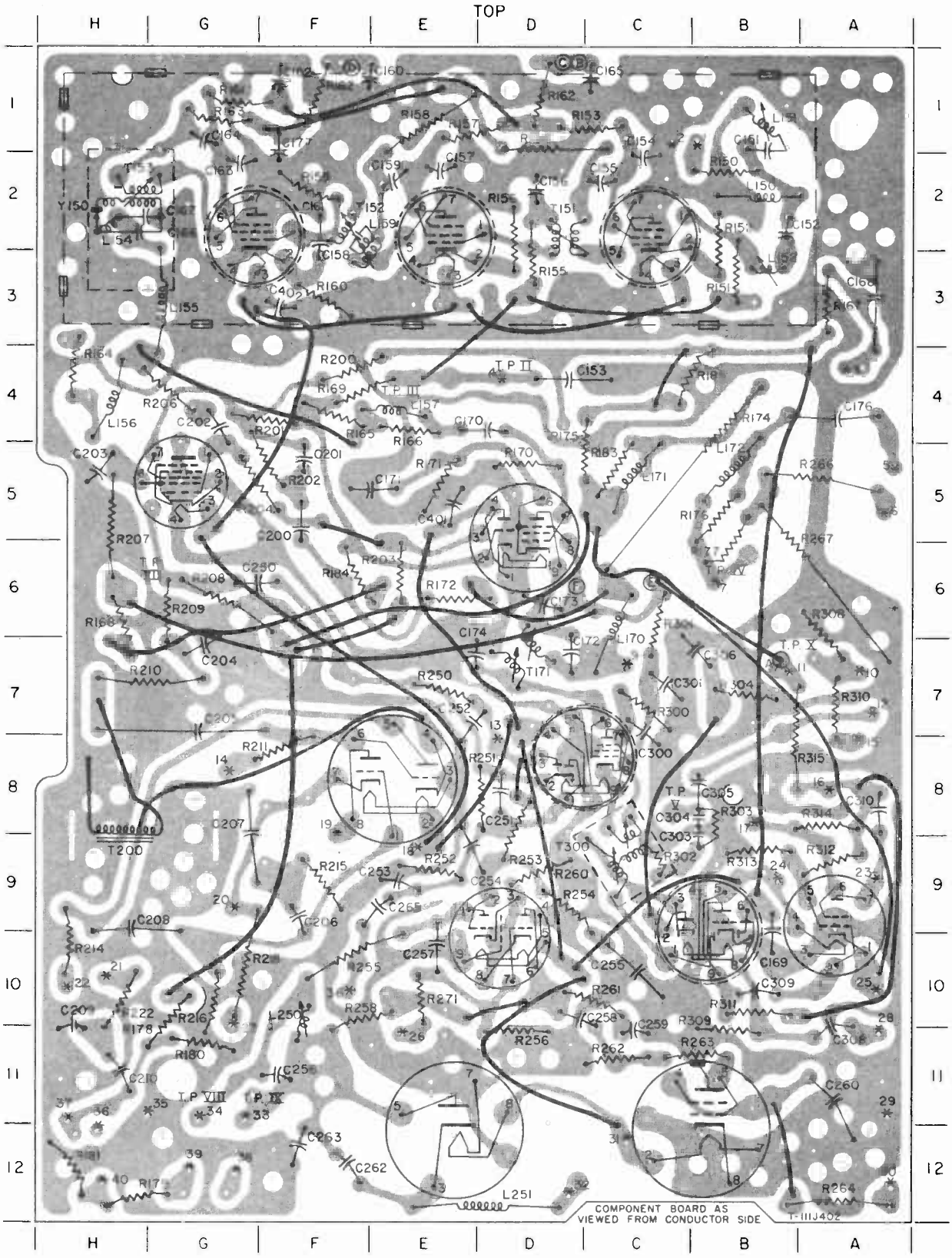

COMPONENT LOCATION VIEWED FROM CONDUCTOR SIDE OF BOARD

Hoffman

MARK 5, CHASSIS 420, 420U,

Chassis 419, 419U, are practically identical to 420; besides minor differences other type tuners are used.

Chassis 420 used in Models M3181, SP3181, B3191,
Chassis 419 used in Models B3081, M3081, P3081, W3081.

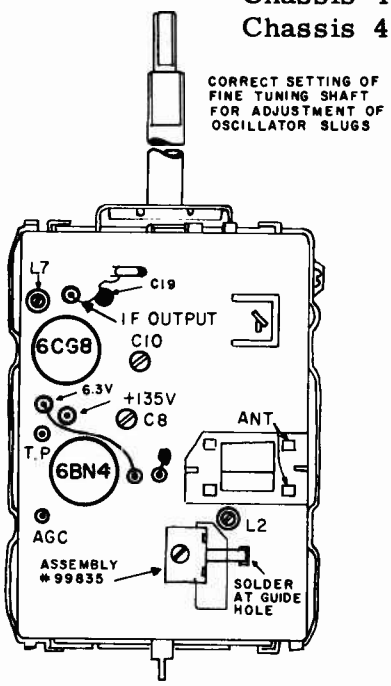

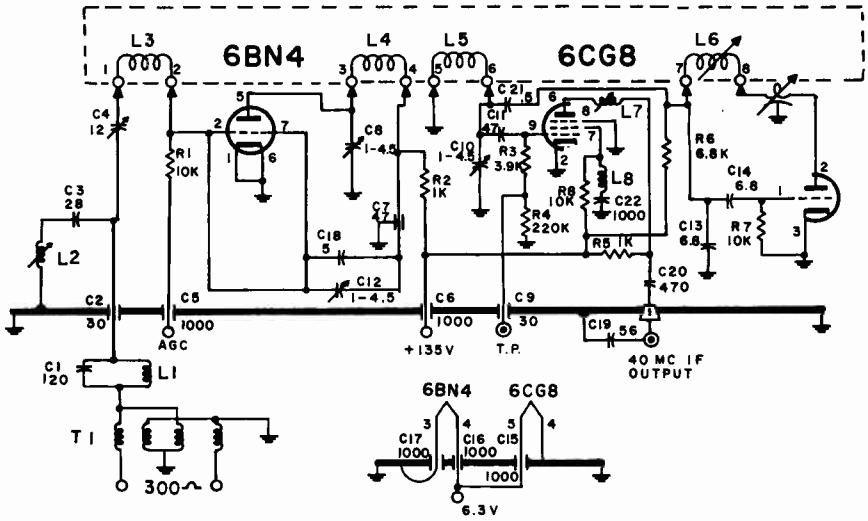

TUNER 9930

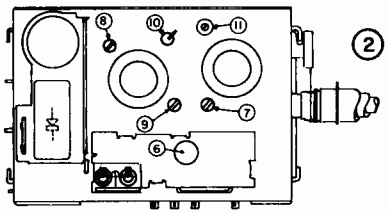

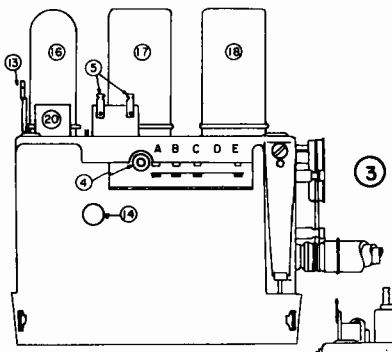

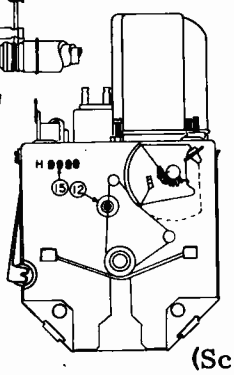

IDENTIFICATION

1. FRONT VIEW
2. TOP VIEW
3. SIDE VIEW
4. L3 41MC TRAP
5. VHF ANT.
6. VHF TEST POINT
7. C11
8. C1
9. C6
10. IF OUTPUT
11. L8 IF ALIGN. ADJ.
12. OSC. ADJ.
13. UHF ANT.
14. UHF TEST POINT
15. PART NUMBER
16. 6AF4A
17. 6BQ7A
18. 6AT8
19. SCHEMATIC NOTES
20. CRYSTAL SHIELD

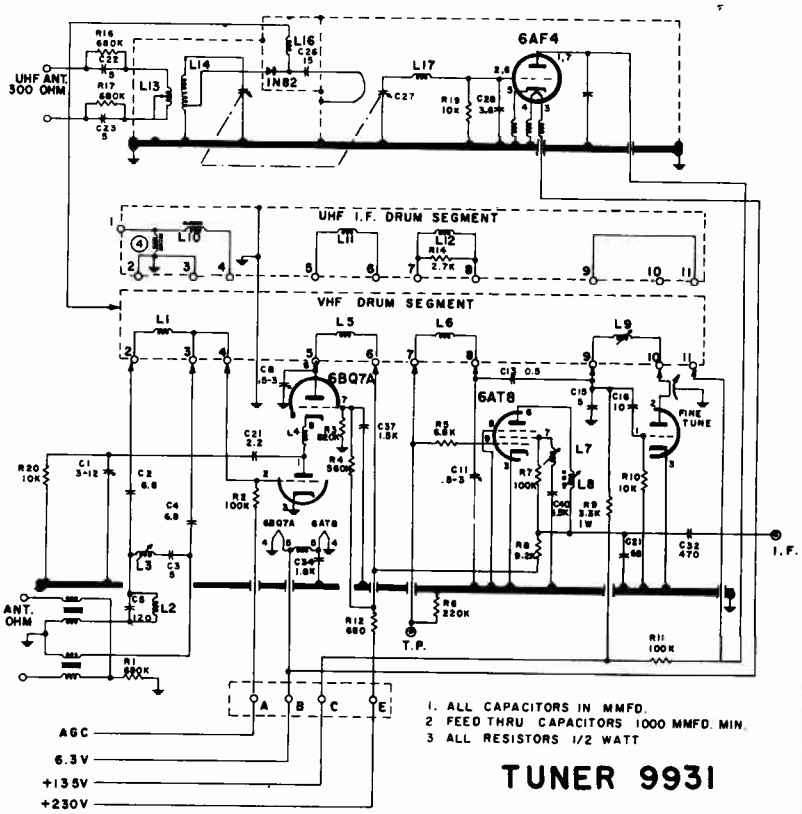

1. ALL CAPACITORS IN MMFD.
2. FEED THRU CAPACITORS 1000 MMFD. MIN.
3. ALL RESISTORS 1/2 WATT

TUNER 9931

(Schematic diagram on pages 94-95; alignment on page 96)

HOFFMAN MARK 5, CHASSIS 420, 420U, Schematic Diagram

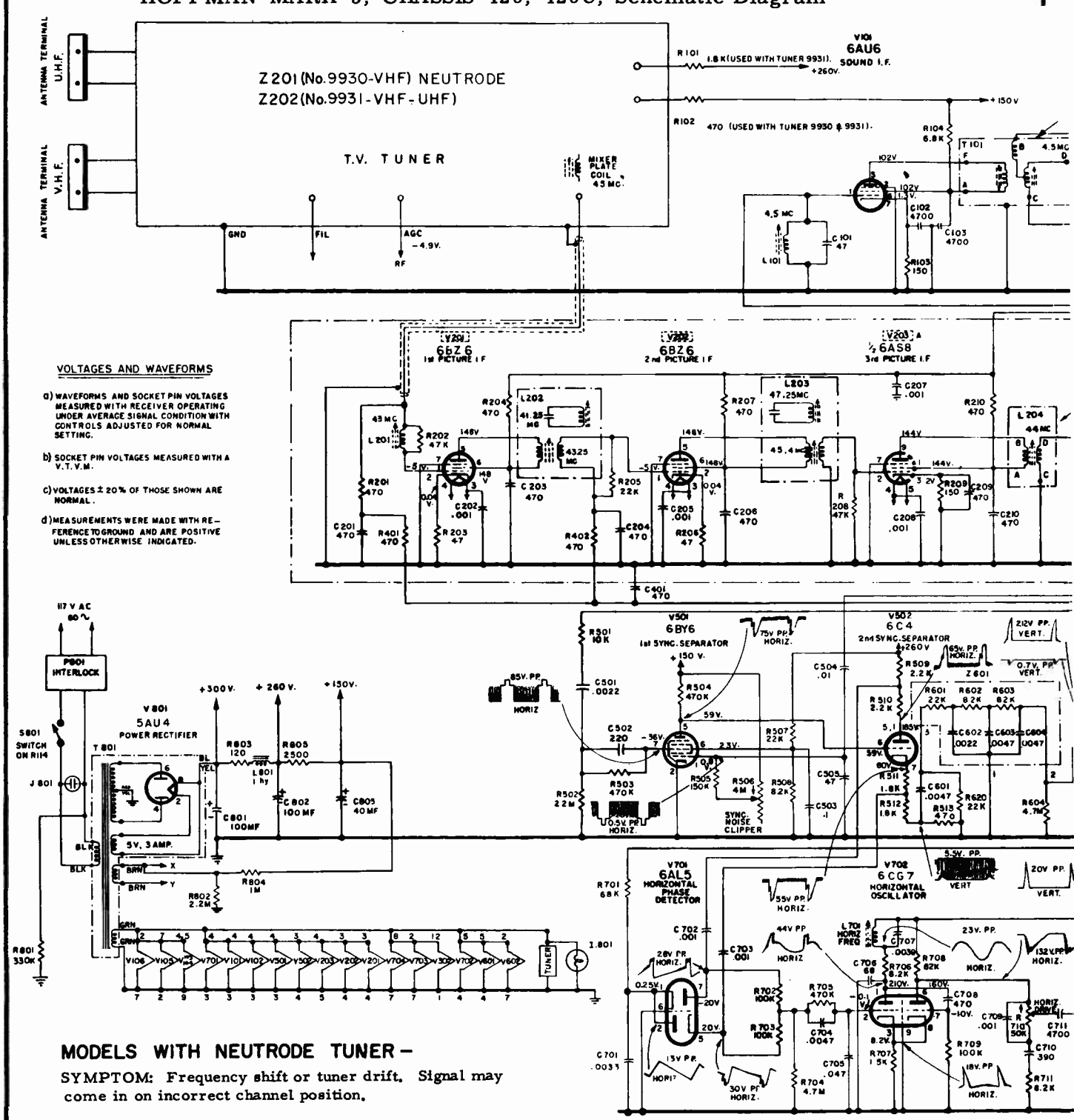

VOLTAGES AND WAVEFORMS

a) WAVEFORMS AND SOCKET PIN VOLTAGES MEASURED WITH RECEIVER OPERATING UNDER AVERAGE SIGNAL CONDITION WITH CONTROLS ADJUSTED FOR NORMAL SETTING.

b) SOCKET PIN VOLTAGES MEASURED WITH A V.T.V.M.

c) VOLTAGES ± 20% OF THOSE SHOWN ARE NORMAL.

d) MEASUREMENTS WERE MADE WITH REFERENCE TO GROUND AND ARE POSITIVE UNLESS OTHERWISE INDICATED.

MODELS WITH NEUTRODE TUNER –

SYMPTOM: Frequency shift or tuner drift. Signal may come in on incorrect channel position.

CURE: The trouble may be incorrectly diagnosed as misadjusted oscillator slugs. Adjustment of the oscillator slugs is only a temporary cure and the trouble may return. Replace C13 in the tuner with a 6.8 MMF N-2200 ceramic capacitor. C13 is a printed circuit type ceramic disc mounted in a slot in the printed board.

NOTES:

1. ALL CAPACITIES SHOWN AS DECIMAL FRACTIONS ARE MICROFARADS AND SHOWN WHOLE NUMBERS ARE MICROMICROFARADS UNLESS OTHERWISE NOTED
2. ALL RESISTANCES ARE GIVEN IN OHMS; K=1,000, M=1,000,000
3. ARROWS ON POTENTIOMETERS INDICATE CLOCKWISE ROTATION
4. —·—·— ASSEMBLY
5. - - - - - - - SHIELD (DASHED LINE AROUND V-NUMBER INDICATES EXTERNAL TUBE SHIELD)
6. ENCIRCLED LETTERS ARE REFERED TO IN ALIGNMENT INFORMATION.

SCHEMATIC DIAGRAM FOR HOFFMAN MARK 5 CHASSIS 420, 420U

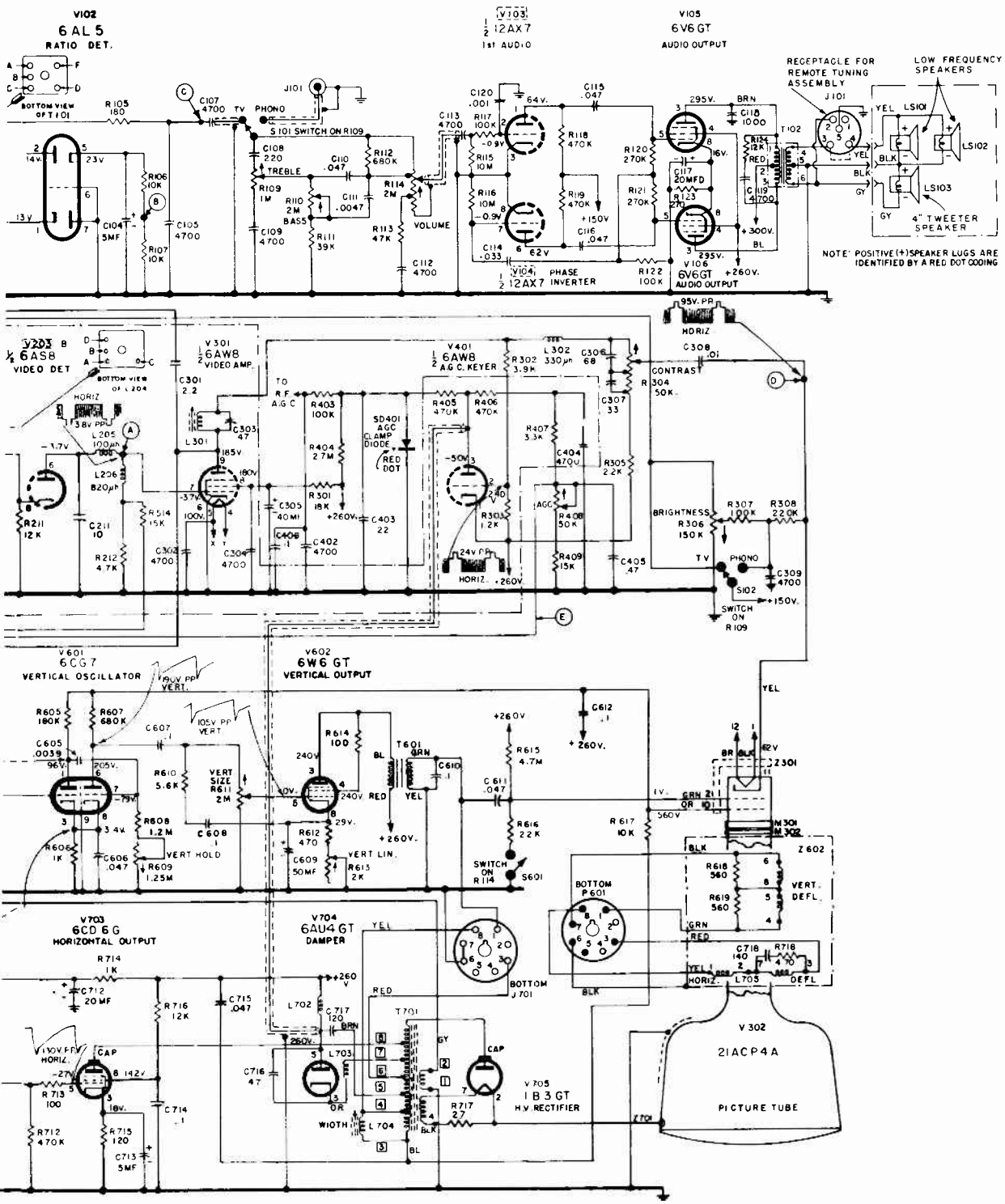

MISCELLANEOUS

SYMPTOM: Receiver was strip converted for UHF reception. VHF reception was normal but UHF reception was intermittant.

CURE: Trouble was found to be in the type N4 UHF conversion strip. Replacing the 2.2 mmf capacitor in the oscillator grid circuit with a 1.2 mmf cpacitor cured the trouble. The 2.2 mmf capacitor is in parallel with a 690 resistor on the strip.

HOFFMAN MARK 5, CHASSIS 420, 420U, Alignment Information (Continued)

SOUND ALIGNMENT -

1. Connect voltmeter from junction of R106 and R107 (B on schematic) to chassis ground. Apply a 4.5 MC unmodulated signal through a .005 mfd capacitor to the grid of the video amplifier tube.

2. Align the primary of T101 (bottom slug) and L101 for maximum indication on the meter. Keep the 4.5MC signal from the generator to a level which gives approximately 4 volts reading on the meter.

3. Keep one voltmeter lead attached to T. P. as in step 1 and move the other lead from chassis to the audio take-off, point C.

4. Adjust the secondary of the ratio detector transformer (top slug of T101) for zero indication on the meter. Keep 4.5 MC input at the same level as in step 2. Tune in a station on the receiver and readjust Ratio Detector to point of best sound if any buzz is evident in the sound.

5. With 4.5 MC input signal applied as in steps 2, 3 and 4, connect a detector network to the picture tube cathode lead and connect the meter across it. Refer to Figure 3.

6. Adjust L303 (4.5 MC trap in picture tube cathode circuit) for minimum indication on the meter.

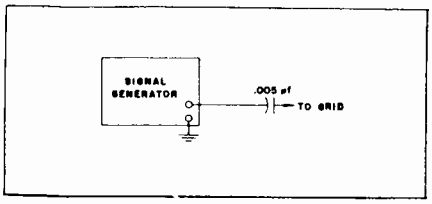

Figure 1. SIGNAL GENERATOR ISOLATION

VIDEO IF ALIGNMENT-

Connect a voltmeter from the chassis to grid of V301 with 10K 1/2W resistor in series with the meter lead. Apply unmodulated R.F. signal to the grid of the tuner converter tube, with frequencies listed in Table B, below and adjust for minimum or maximum indication on the voltmeter as indicated.

Note: In all steps of the Video IF Alignment the input signal level should be maintained at a value which develops approximately one (1) volt across the voltmeter.

To check the over-all response of the I.F. strip, use an oscilloscope with high vertical gain. Remove the voltmeter from grid of the video amplifier and connect the oscilloscope through the isolation network (Figure 4). Connect a sweep generator with center frequency of 43.50 MC to the tuner converter grid. Slight readjustment of the I.F. transformers and converter coil may be necessary to give the best response curve. The 10% limits specified in Figure 5 should be carefully considered before deciding that further adjustment is necessary. This is especially important outside the normal reception area where sensitivity becomes more important.

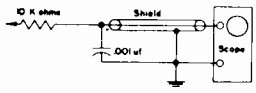

Figure 4. OSCILLOSCOPE ISOLATION

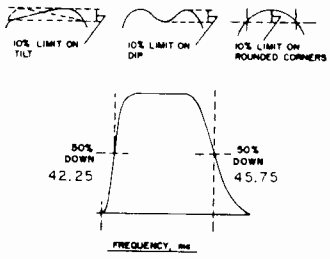

Figure 5. IF RESPONSE CURVE

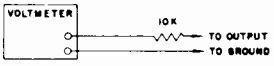

Figure 2. VOLTMETER ISOLATION

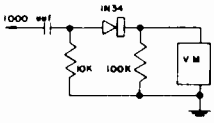

Figure 3. DETECTOR NETWORK

VIDEO IF ALIGNMENT FREQUENCIES

INPUT FREQUENCY	ADJUST	TUNE FOR	DESCRIPTION
(1) 44MC	L204	Maximum	3rd I F Transformer
(2) 47.25MC	L203 (top)	Minimum	Adjacent Channel Sound Trap
(3) 45.4MC	L203 (bottom)	Maximum	2nd I F Transformer
(4) 41.25MC	L202 (top)	Minimum	Co-channel Sound Trap
(5) 43.25MC	L202 (bottom)	Maximum	1st I F Transformer
(6) 43MC	* Tuner Converter Plate Coil	Minimum	* Located on Tuner Chassis
(7) 43MC	L201	Maximum	I F Input Coil
(8) 45MC	* Tuner Converter Plate Coil	Maximum	* Located on Tuner Chassis

Hotpoint Co.

"MM" Line, Models 17S301, 17S302

UHF MODELS BEAR SUFFIX "UHF"

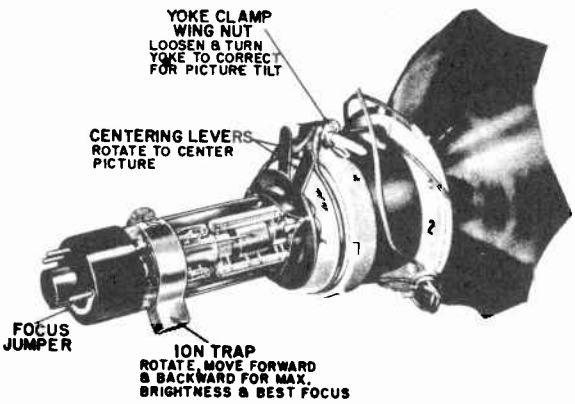

HEIGHT AND VERTICAL LINEARITY:

The controls (R208 and R214) should be adjusted simultaneously to provide proper picture height consistent with good vertical linearity. The final adjustment should extend the picture approximately ⅛ inch beyond the mask limits.

HORIZONTAL AFC CONTROLS:

1. Tune receiver to a signal and adjust controls for normal operation.
2. Short test point VI to chassis (Fig. 34, page 101).
3. Shunt L250 (horizontal stabilizer coil) with 1000 ohms. (Connect resistor between Test Points VII and VIII.)
4. Adjust horizontal hold potentiometer R255 so that picture again "floats" back and forth across the screen. Leave R255 set like this.
5. Remove 1000-ohm shunt across L250, and adjust it so that picture again "floats" back and forth across the screen. Leave L250 set like this.
6. Remove chassis connection from test point VI. Check horizontal pull-in on various signals and readjust R255 slightly, if necessary.

TO REMOVE CABINET BACK:

1. Remove the three self-tapping screws holding the back to the cabinet.
2. Pull top of back away from cabinet about half an inch and hold there.
3. Lift back up until it clears lower lip.
4. Pull back and interlock off.

TO REMOVE THE CHASSIS:

1. Remove cabinet back as shown above.
2. Pull off all control knobs.
3. With $\frac{5}{16}$-in. hex socket remove the two self-tapping screws holding chassis to cabinet bottom.
4. With same socket remove the single $\frac{5}{16}$-in. self-tapping screw from top center of chassis (just above yoke).
5. Loosen top speaker screw enough so that lever from control panel can be raised and pushed forward in an arc so it retracts into the fiber control panel.
6. Unsolder speaker leads.
7. Remove picture tube socket, ion trap, centering rings, and yoke clamp.
8. Remove or lower adjustable foot at rear of cabinet.
9. Grasp chassis by the tuner and H-V cage and tilt top forward at the same time you pull H-V cage to the rear (Fig. 2).
10. Slip chassis past yoke keeping tuner shaft in its cabinet hole.
11. Right side of chassis should be clear of cabinet so the anode lead can be discharged and removed.
12. The chassis can now be slid out of the cabinet right side first.

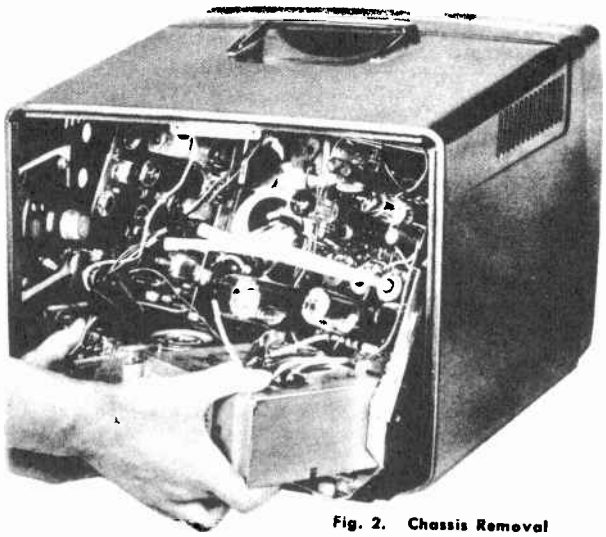

Fig. 2. Chassis Removal

TO INSTALL THE CHASSIS:

1. Reverse the removal procedure remembering:
   a. To slide chassis in *left side first.*
   b. To connect the *anode* lead.
   c. To be sure the picture tube grounding strap clears the cabinet bracket.
2. The control shafts can be centered by means of the slotted hole for the lower left chassis mounting screw and the brace that connects to the speaker screw.

REMOVAL OF THE SAFETY GLASS AND PICTURE TUBE:

Remove the two bottom screws securing the cabinet front to the cabinet. Tilt cabinet front out at bottom. Front, including safety glass, can now be removed by unhooking it at the top.

The inside of the face glass and the picture tube face may now be cleaned. A solution of *pure soap* and water and a soft cloth is recommended for cleaning. Most other cleaning agents, sprays, detergents, or solvents are harmful to the safety glass and should not be applied.

In order to remove the picture tube from the cabinet, it is necessary to first remove the chassis from the cabinet as outlined in order to disconnect the H.V. anode lead.

The picture tube is secured by the clamping action of the cabinet projectors against the rim of the picture tube (Fig. 3). Remove the two clamping screws from the top cabinet projection clamps while supporting the rear of the picture tube with one hand—slide the tube out through the front of the cabinet.

To replace the tube, reverse the above procedure remembering the following: the anode button should be positioned on the left side of the cabinet as you face the front.

Fig. 3. Front View—Cabinet Front Removed

(Continued on pages 98 through 104)

HOTPOINT "MM" Line, Models 17S301, 17S302, Component Board Wiring

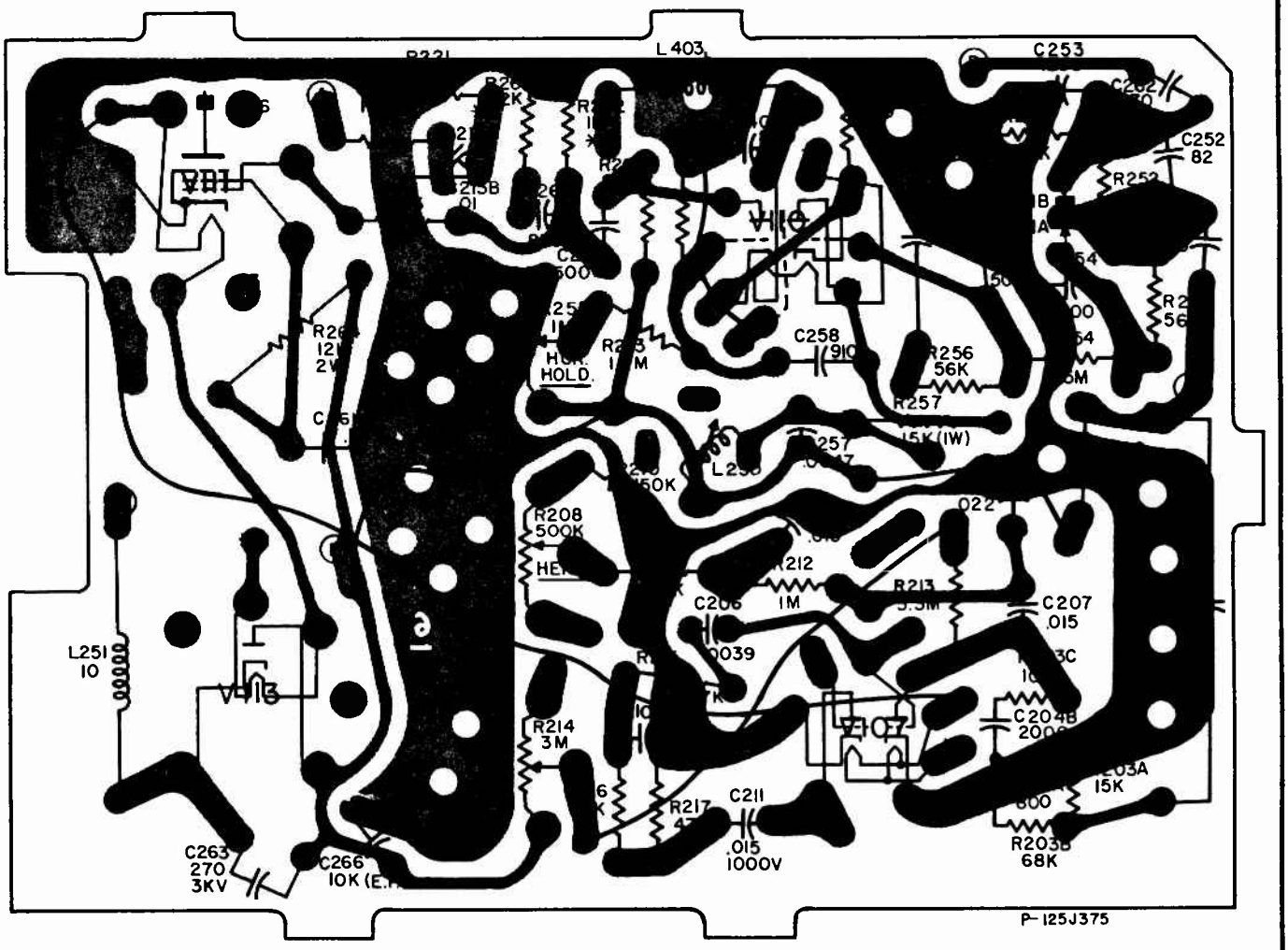

Sweep Component Board Wiring

Ⓐ CIRCLED LETTERS REPRESENT INTER-CONNECTING WIRES TO OTHER CIRCUIT BOARDS OR MAIN CHASSIS.

Ⓐ CIRCLED LETTERS

- Ⓐ TO RED LEAD OF T201
- Ⓑ TO TERM. 6 OF T251
- Ⓒ TO PIN 7 OF V106
- Ⓓ TO TERM. 3 OF T251 & PIN 10 OF V115
- Ⓔ TO +255V AT C403A
- Ⓕ TO TERM. 5 OF T251

UNLESS OTHERWISE NOTED

K=1000, M=1,000,000
CAPACITORS MORE THAN 1 = MMF
CAPACITORS LESS THAN 1 = MF
RESISTORS ARE 1/2 WATT
INDUCTANCES IN μh

*ASTERISKED NUMBERS REPRESENT WIREWRAP TERMINALS MOUNTED ON COMPONENT BOARD FOR CONNECTING WIRES FROM OTHER BOARD OR MAIN CHASSIS.

*** ASTERISKED NUMBERS**

- *1. FROM PIN 1 OF V115
- *2. FROM T201 (BLUE WIRE)
- *3. FROM PIN 2 OF V115
- *4. FROM VHF TUNER FILAMENT
- *5. FROM R402
- *6. FROM PIN 3 OF V114
- *7. FROM R207 (VERT. HOLD)
- *8. FROM R207 (VERT. HOLD)

VIEW SHOWS COMPONENTS & WIRING AS MOUNTED ON COMPONENT SIDE OF BOARD

(E.P.) INDICATES EARLY PRODUCTION

HOTPOINT "MM" Line. Models 17S301, 17S302, Component Board Wiring

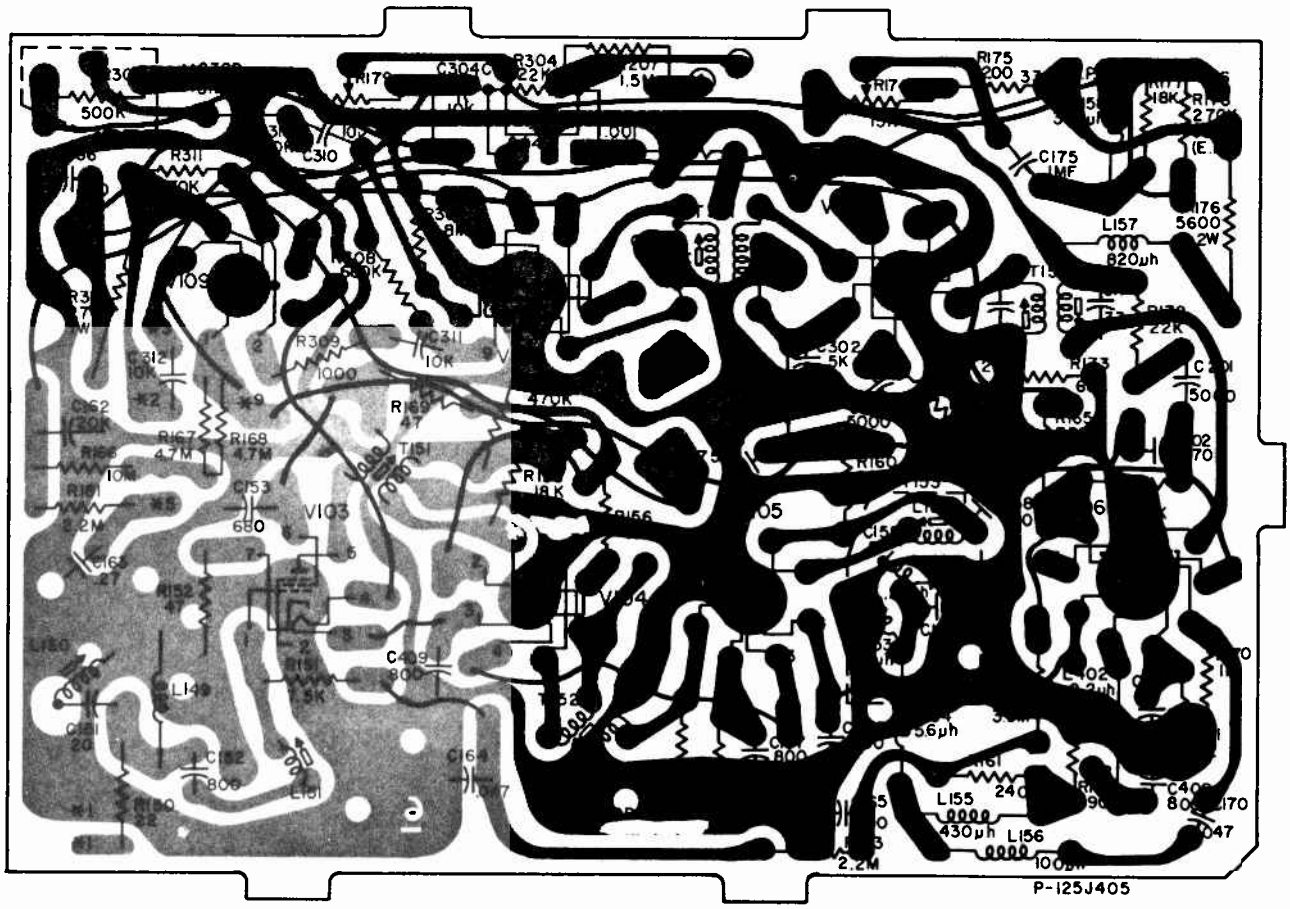

VIEW SHOWS COMPONENTS & WIRING AS MOUNTED ON COMPONENT SIDE OF BOARD

I-F Component Board Wiring

Ⓐ CIRCLED LETTERS REPRESENT INTER-CONNECTING WIRES TO OTHER CIRCUIT BOARDS OR MAIN CHASSIS

Ⓐ TO PIN 7 OF V107

Ⓑ TO R208 (HEIGHT CONTROL)

✱ASTERISKED NUMBERS REPRESENT WIREWRAP TERMINALS MOUNTED ON COMPONENT BOARD FOR CONNECTING WIRES FROM OTHER BOARD OR MAIN CHASSIS

✱1 SHIELDED WIRE FROM VHF TUNER
✱2 RED WIRE FROM T302
✱3 BLUE WIRE FROM T302
✱4 FROM +255V
✱5 AGC (WHITE WIRE) FROM VHF TUNER
✱6 FROM PIN 11 OF V115 SOCKET
✱7 FROM C203 (ON SWEEP BOARD)
✱8 FROM PIN 12 OF V115
✱9 FROM C403 (+135V)

(E.P.) INDICATES EARLY PRODUCTION
(L.P.) INDICATES LATE PRODUCTION

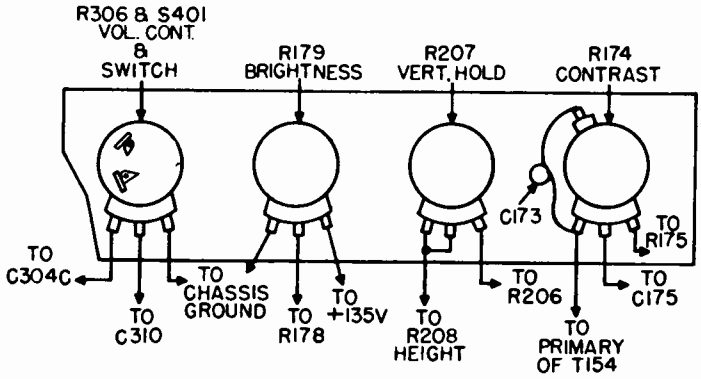

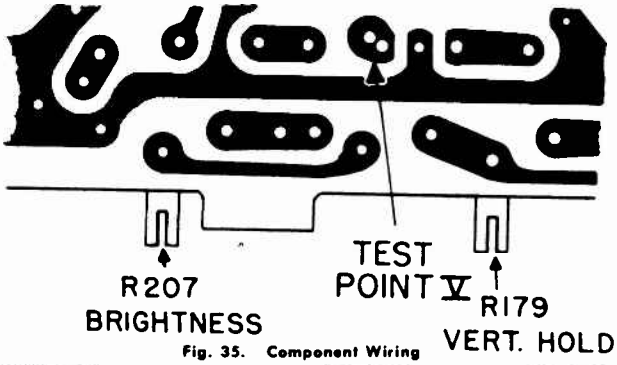

Fig. 35. Component Wiring

HOTPOINT "MM" Line, Models 17S301, 17S302, Alignment Information

RECEIVER ALIGNMENT

VIDEO I-F SYSTEM

The alignment of the I-F system involves the adjustment of 1 trap and 5 pass-band tank circuits. Allow at least 15 minutes warm-up for the receiver and test equipment before proceeding. Follow the usual precautions regarding equipment termination and cable dress. Some tuning cores will apparently go through two peaks. In all cases, the cores should be tuned to the first peak starting from the "out" position. Adjustment locations are indicated in Figure 34.

NOTES:

1. Set channel selector to channel 11. Turn fine tuning control fully counterclockwise. Set contrast control fully clockwise.
2. Connect sweep generator to capacity type jig shown in Figure 15. If General Electric sweep equipment is used, the indicated resistor should be omitted.
3. Connect a 3-volt battery from Test Point II to chassis (positive battery lead to chassis).
4. Connect −45 volts between chassis and pin 5, V111. (Positive to chassis.)

A-M PRE-PEAKING FREQUENCIES

Tune for Maximum	
L136	45.0 mc
L151	42.5 mc
L152	44.15 mc
T151	42.9 mc
T152	45.1 mc
Tune for Minimum	
L150	47.25 mc

5. Connect scope through 10,000 ohms to Test Point III. Calibrate vertical gain of scope for 3 volts peak to peak for 2-inch deflection. When aligning, base-line to 45 mc marker should be kept at 2 inches. Refer to pre-peaking chart if alignment difficulty is experienced. Align as follows:

VIDEO I-F ALIGNMENT CHART

STEP	ADJUST	DESIRED RESPONSE	REMARKS
1	L150 for minimum at 47.25 mc.	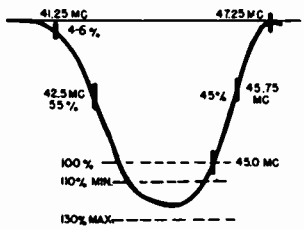	Adjust L136 simultaneously with L151. 41.25 mc marker is very critical and should be kept between limits of 4 to 6%. Peak of curve may fall between limits of 110% and 130% using 45 mc as the 100% reference.
2	T151 to set 42.5 mc marker at 55%.		
3	T152 to set 45.75 mc marker at 45%.		
4	L136 to set width of peak region of curve.		
5	L152 and L151 for peak region symmetry.		

In order to provide a method of checking individual stages of the I-F system using a sweep method, the following curves are shown. These curves represent an approximate ideal alignment of the I-F section.

The oscilloscope should be connected to Test Point III as noted in Step 5 of NOTES above. Increased scope gain is sometimes necessary to obtain useable curves. The sweep signal should be fed to the grid of the 3rd I-F amplifier while shorting out the primary of T152, to obtain the curve shown below (Grid V105).

Curve (Grid V104) results when T151 primary is shorted and the signal output lead is moved to the grid of V104, Pin 1.

Curve (Grid V103) shows the curve which should be obtained when the signal is fed to the grid of the 1st I-F amplifier, Pin 1 of V103.

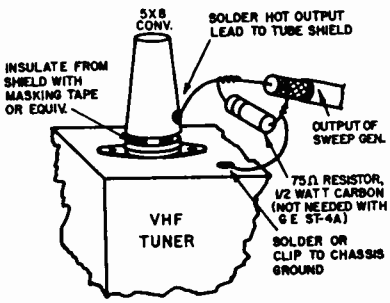

Fig. 15. I-F Sweep Jig

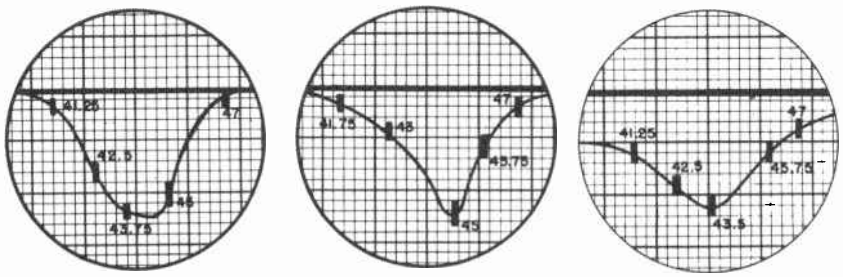

GRID V103 GRID V104 GRID V105

Fig. 16. Video I-F Curves

4.5 MC TRAP ALIGNMENT

1. Turn contrast control fully clockwise.
2. Connect detector network (Figure 17) to Test Point IV and set contrast to maximum. Connect oscilloscope to network.
3. Apply a 4.5 mc AM signal through .001MF to Test Point III.
4. Tune the bottom core of T154 for minimum signal observed on oscilloscope.

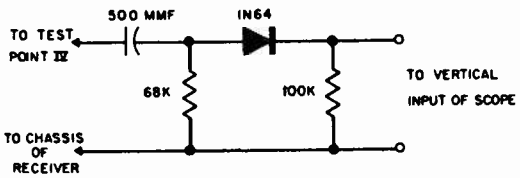

Fig. 17. Detector Network

HOTPOINT "MM" Line, Models 17S301, 17S302 Alignment, Continued

AUDIO I-F ALIGNMENT

NOTES:

1. Tune in a television signal. This will provide a 4.5 mc signal source for audio I-F alignment. Keep the volume control turned down unless the speaker is connected.

2. Connect two matched 100,000-ohm resistors (in series) between pin No. 2 of V108A (5T8) and chassis.

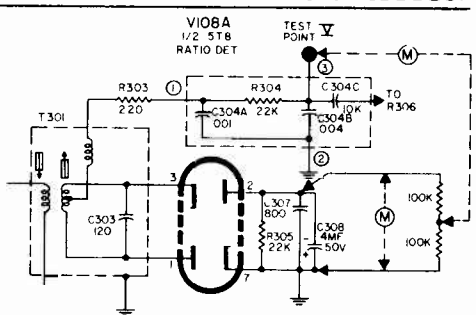

Fig. 18. Ratio Detector Alignment

AUDIO ALIGNMENT CHART

STEP	CONNECT VTVM OR 20,000 OHMS/VOLT METER	ADJUST	METER INDICATION	REMARKS
1	Between Pin No. 2 of V108A and chassis. (See Figure 18)	T154 secondary (top)	Adjust for maximum deflection	Repeat steps 1, 2 and 3 to assure proper bandwidth.
2		T301 primary (bottom)	Adjust for maximum deflection	
3	Between Test Point V and the center of the two 100,000-ohm resistors (Figure 18)	T301 secondary (top)	Adjust for zero volts d-c output	

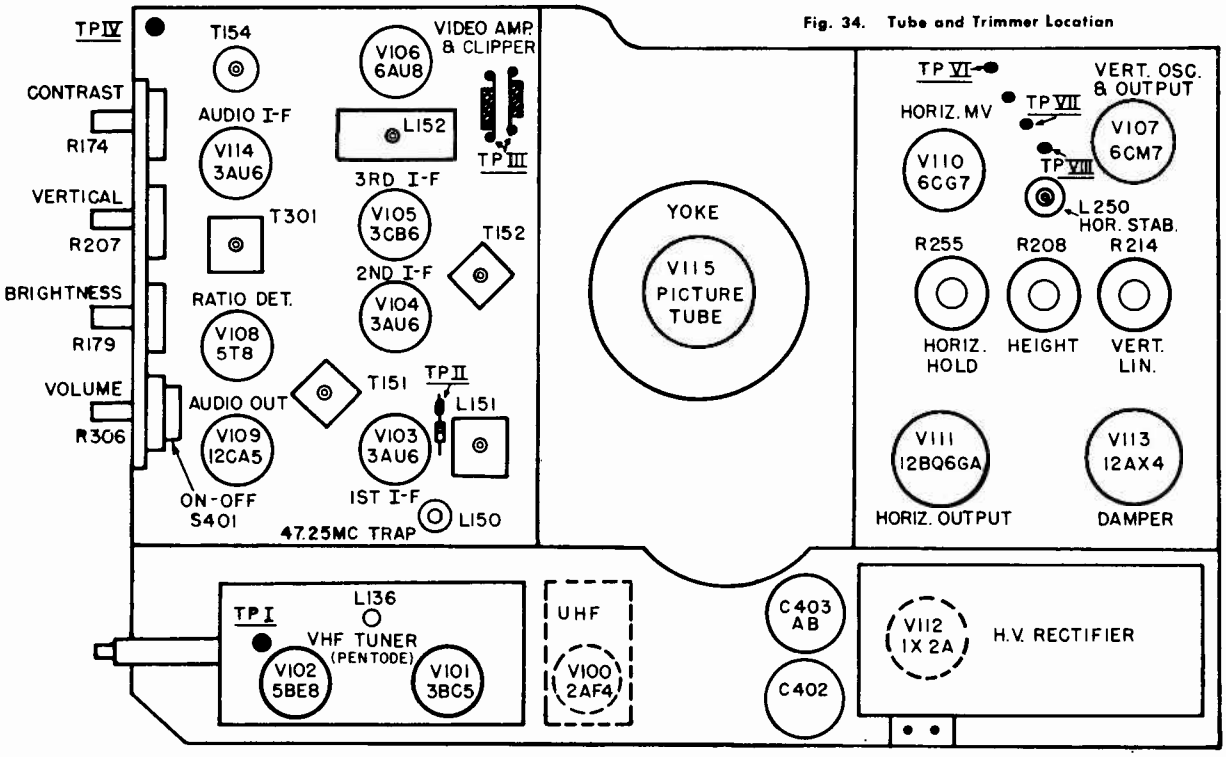

Fig. 34. Tube and Trimmer Location

PRODUCTION CHANGES

During mid-production, the following value changes were effected to reduce grid voltage on the picture tube, V115: R178 changed to 270K, R180 to 1.2 megohms, and R182 to 2.2 megohms.

To improve the transient response of the video amplifier circuit; L155 was changed to 430 uh, L157 to 680 uh, L158 to 300 uh and C173 to 47 mmf.

R264 was changed to 10K to provide increased width and R213 was changed to 2.7 megohms to improve the range of vertical linearity control, R214.

Resistor R312 and capacitor C313 were changed to a combination capacitor-resistor unit of the same values.

C176, C265, C266, R173 and R206 were deleted from late-production receivers. R171 was changed to 100 ohms and R175 to 3300 ohms.

Resistors R1 and 2 and capacitors C1 and 2, were changed to a combination capacitor-resistor unit of different values. R1 and 2 were 3.3 megohms and C1 and 2 were 150 mmf.

L151, the I-F grid input coil, was changed to a different type and does not incorporate a shield can.

T154, the audio take-off and 4.5 mc trap coil was changed to a different type. When this was done, R173 and C176 were removed. R173 and C176 are required when using the early type T154 coil.

Resistor R301 and capacitor C301 were changed to a combination capacitor-resistor unit.

The dual selenium diode, RER-023, used as a phase detector is replaced in late production receivers by two germanium diodes, RED-006. Defective RER-023 units should be replaced with RED-006 diodes.

HOTPOINT "MM" Line, Models 17S301, 17S302, Schematic Diagram

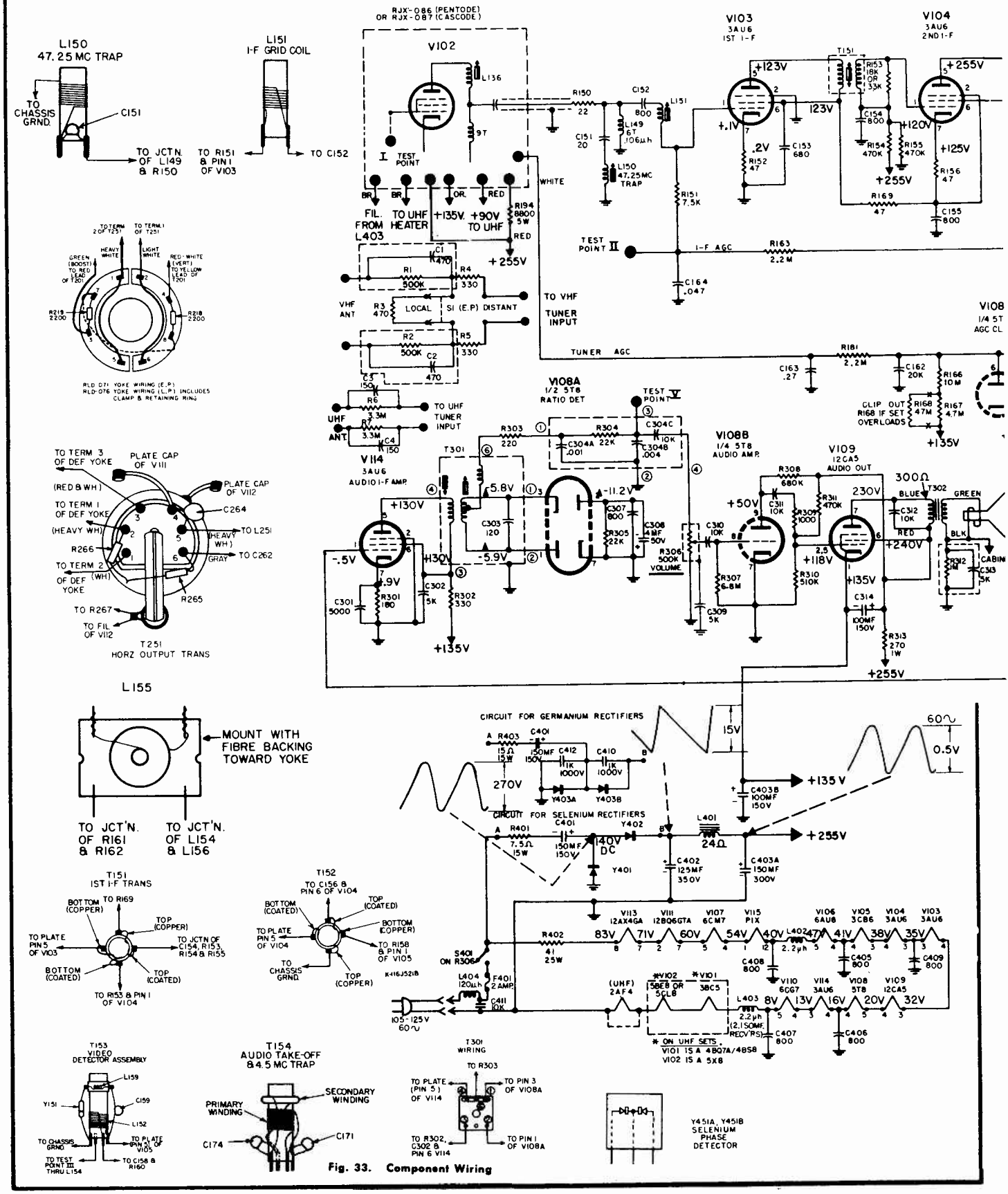

Fig. 33. Component Wiring

HOTPOINT "MM" Line, Models 17S301, 17S302, Schematic Diagram

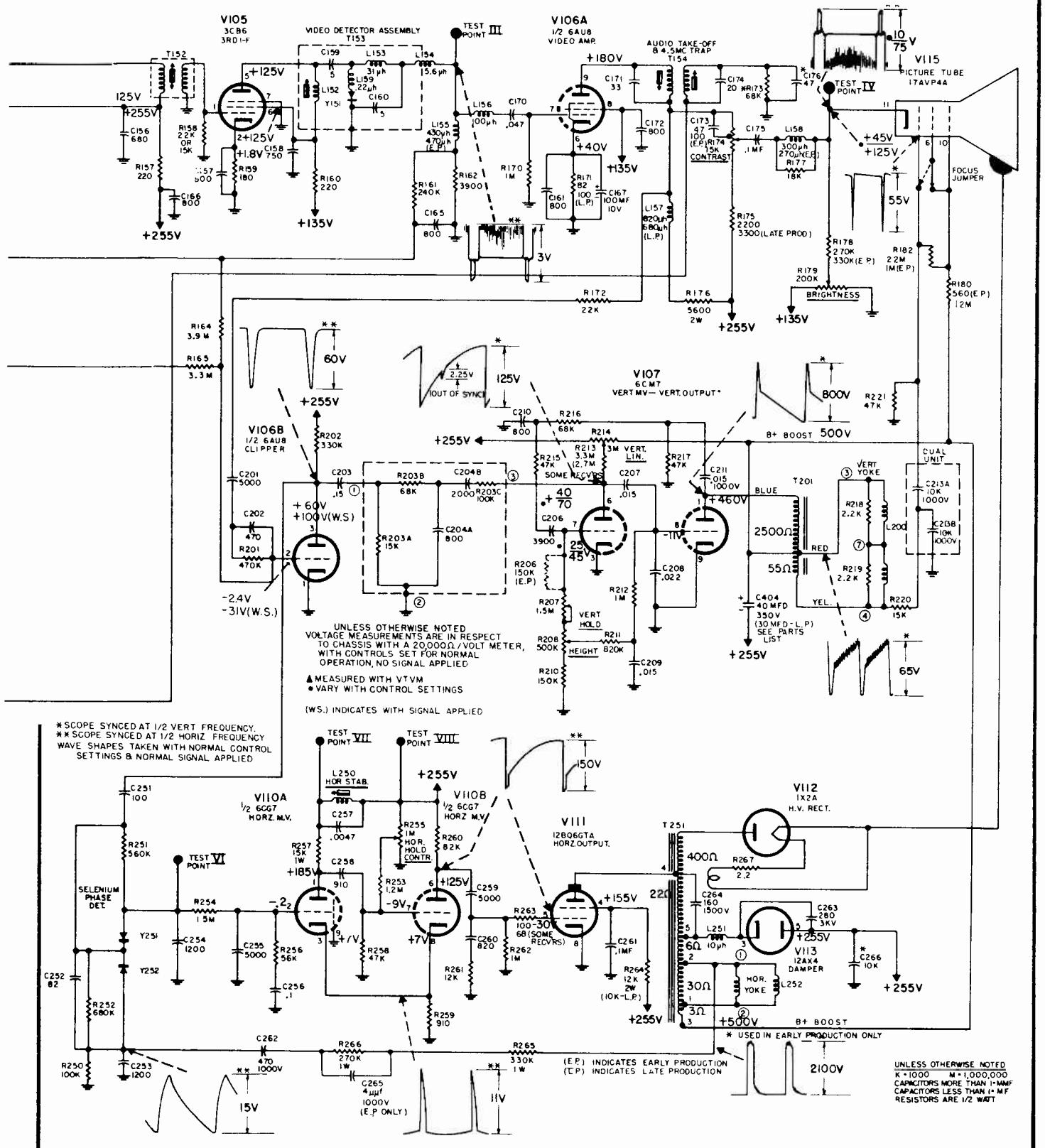

Fig. 38. Schematic Diagram

HOTPOINT "MM" Line, Models 17S301, 17S302, Continued

TROUBLE SHOOTING CHART

SYMPTOM	CHECK FOR
A. No sound, no picture (Raster normal)	1. Inoperative local oscillator, V102A. 2. Open video i-f coupling capacitor (C124 in cascode tuner), C114 in pentode tuner. 3. Improper or no screen or plate voltage at r-f or i-f tubes due to shorted screen by-pass capacitor or open resistor. 4. Open video detector crystal, Y151.
B. No picture, weak sound, raster satisfactory	1. Open inductance, L154 2. Defective antenna or antenna transmission line 3. Defective video detector crystal, Y151 4. Defective V109
C. Noisy picture	1. Open input circuit and components of antenna input circuit, such as open antenna transformer 2. Defective antenna, or antenna transmission line 3. Antenna orientation 4. 4.5 mc trap adjustment
D. Wiggles in picture background, trailing whites, sound normal	1. Alignment of i-f amplifier and associated traps 2. Low value resistor, R162
E. "Motorboat" or flutter in picture and/or audio	1. Open AGC filter capacitor, C163 or C164 2. Alignment of r-f and video i-f amplifiers
F. Negative pictures	1. Defective video amplifier tube, V106 2. Defective video crystal detector, Y151 3. Defective picture tube, V115
G. Wide black bar across picture	1. Heater to cathode leakage of tubes V101, V103, V104, V105, V106, V115
H. Sound bars in picture	1. Video alignment 2. Microphonic tube in tuner, I-F system or video amplifier
I. No picture, sound satisfactory raster ok	1. Open compensating choke L158 2. Open primary winding in T154 3. Open capacitor, C170 or C175
J. Weak or no horizontal sync; vertical sync, picture and sound satisfactory	1. Sync amplitude at input to phase detector 2. Defective horizontal oscillator components, R253, R255, R263, C257 3. Wave form feedback components, R265, R266, C262 4. Defective L250, Y251, Y252, 6CD7 tube 5. Open C256
K. Weak or no composite sync, otherwise picture and sound normal	1. Defective coupling capacitor, C202, C201 2. Incorrect value of plate resistor, R202 3. Insufficient amplitude of composite signal applied to sync amplifier from video amplifier; check video amplifier circuit
L. No vertical sync, horizontal sync satisfactory	1. Sync pulse at input of vert. oscillator, check integrator circuit 2. Vertical oscillator frequency, if far from 60 cps, check vertical oscillator components such as C206, R207
M. "Gear Tooth" effect	1. Open or low value capacity of C256 2. Open or high resistance of R256
N. Inadequate picture width	1. Correct waveshape and amplitude of input "drive" voltage at grid of V111 2. Leaky capacitor, C259 3. Defective deflection coil, L252 4. Defective output transformer T251, shorted turns or arc-over 5. Low emission of tube, V111, V113 6. Low B+ voltage to tubes V110, V111
O. Single, vertical line in center, sound normal	1. Open horizontal deflection coils, L252
P. Poor horizontal linearity	1. Defective yoke, L252 2. Defective capacitors, C259, C260
Q. Poor horizontal linearity, bright vertical bars, inadequate width	1. Defective damper tube, V111 2. Open capacitor C404, or open transformer winding between yoke taps
R. Black "beady" vertical line or lines, receiver normal otherwise	1. Defective output tube, V111 2. Defective output transformer, T251 3. Defective deflection yoke, L252
S. No raster—sound satisfactory	1. Defective sweep output tube V111, or damper tube V113, or H-V rectifier V112 2. Defective tube V110, or pix tube V115 3. No screen voltage on V111 4. Defective sweep output transformer, T251 5. No voltage at 1st anode of picture tube (pin 10) 6. Excessively high bias voltage at cathode of picture tube

MOTOROLA

CHASSIS TS-422

MODELS 17T27 & 17T28 Series

RECEIVER MODEL BREAKDOWN CHART

Model	Description	TV Chassis
17T27CH	Table, charcoal: metal	TS-422
Y17T27CH	Table, charcoal: metal	TS-422Y
17T28-1	Table, mocha & antique white: metal	TS-422
Y17T28-1	Table, mocha & antique white: metal	TS-422Y
17T28-2	Table, flame & antique white: metal	TS-422
Y17T28-2	Table, flame & antique white: metal	TS-422Y
17T28-3	Table, maple sugar & antique white: metal	TS-422
Y17T28-3	Table, maple sugar & antique white: metal	TS-422Y

CHASSIS DESCRIPTION

TS-422 SERIES — These receivers utilize a plated circuit chassis containing 16 circuit tubes, a 17AVP4A rectangular 17" aluminized picture tube (90-degree deflection angle) or a 17AVP4 rectangular 17" non-aluminized picture tube (90-degree deflection angle). Receiver contains a germanium diode detector and two selenium rectifiers.

TS-422Y — Same as the TS-422 except for the tuner type. Chassis having a "Y" suffix contain a cascode type tuner plus a factory-installed "continuous tuning" UHF tuner.

DEFLECTION YOKE ADJUSTMENT

If the deflection yoke shifts, the picture will be tilted. To correct, loosen the clamp at the rear of the deflection yoke holding the rubber wedge against the yoke. Push the yoke as far forward as possible, then rotate until the picture is straight. Loosen rubber wedge clamp and push rubber wedge tight against rear of yoke. Release wedge clamp. Readjust magnetic centering device, if necessary.

HORIZONTAL OSCILLATOR ADJUSTMENT

The HORIZONTAL HOLD control should have a sync range of approximately 50 degrees. If the control is too critical, adjust as follows:

1. Set all controls for a normal picture.

2. Short out the horizontal automatic frequency control voltage by running a piece of wire (wire with clips) between the HOR AFC test point (33R) and ground. See Figure 3 for location.

3. Disable HORIZONTAL OSCILLATOR coil (L-501) by connecting a .1 mfd 400 volt capacitor between the HOR COIL test point (34R) and chassis ground.

4. Adjust HORIZONTAL HOLD control (front panel) to the point where the picture almost remains stationary...as far as horizontal sync is concerned. Make sure the picture is also in sync vertically.

5. Remove the .1 mfd capacitor shunting the HORIZ OSC coil and without turning the horizontal hold control, adjust the HORIZONTAL OSCILLATOR COIL to the center of the range in which the picture almost remains in sync horizontally (adjust core of horizontal osc coil using a non-metallic tool).

6. Remove wire shorting HOR AFC to ground and adjust HORIZONTAL HOLD control (front panel) so that no fold-over appears on either side of the raster.

ION TRAP ADJUSTMENT

CHECK THE ION TRAP FOR POSSIBLE MISADJUSTMENT DUE TO SHIPMENT...MISADJUSTMENT MAY REDUCE THE LIFE OF, OR RENDER SERIOUS DAMAGE TO, THE PICTURE TUBE.

To adjust the ion trap, proceed as follows:

1. Turn receiver ON and set the contrast control for maximum usable contrast.

2. Set the brightness control for maximum brightness without raster blooming or de-focusing.

3. Picture size should slightly exceed the mask dimensions when the line voltage is 117 volts.

4. Rotate the ion trap from left to right and position back and forth until the brightest raster is obtained. Always adjust for brightest raster...never try to correct for neck shadow or centering by use of the ion trap.

5. Check screen for proper screen coverage regarding size, centering, tilt and shadow.

6. Readjust ion trap for maximum screen brightness.

NOTE: For correct adjustment, the ion trap must be of the correct strength. After adjusting for correct brightness, the trap should not cover the entire slash gap of the gun and the rear edge of the trap must be farther from the base of the tube than 1/8". If trap position is outside these limits proper brightness may not be obtained, and the life of the picture tube may be shortened if the ion trap is not replaced with one of correct strength.

PICTURE CENTERING

Starting with the magnetic centering device arms together for minimum field strength, and turned horizontally....

1. Separate the arms of the centering device to center the picture vertically.

2. Adjust horizontal centering by rotating the magnetic centering device as a unit one way or the other. It may then be necessary to readjust vertical centering by slightly rotating the relative position of the arms.

3. Re-check adjustment of ion trap after centering is completed.

FOCUS

A marked difference in the focus can be noticed when the ion trap, magnetic centering device and the shunting strap are properly placed. The adjustments are necessary because of gun structure differences.

To properly focus the picture tube, proceed as follows:

1. Adjust the ion trap as described in Ion Trap instructions.

2. Adjust centering device as described in centering instructions. At times, focus may be improved by rotating the magnetic centering device 180 degrees and repeating the centering procedure.

3. Readjust the ion trap for maximum raster brightness.

4. Adjust shunting strap located on the base of the picture tube (under the tube socket) for best focus. The shunting strap is located between pin #6 (focus anode) and either pin #1 (chassis ground) or pin #10 (bootstrap). Leave the strap in the position giving best focus. Re-check steps #2 and #3.

MOTOROLA Chassis TS-422, Models 17T27 and 17T28 Series, Continued

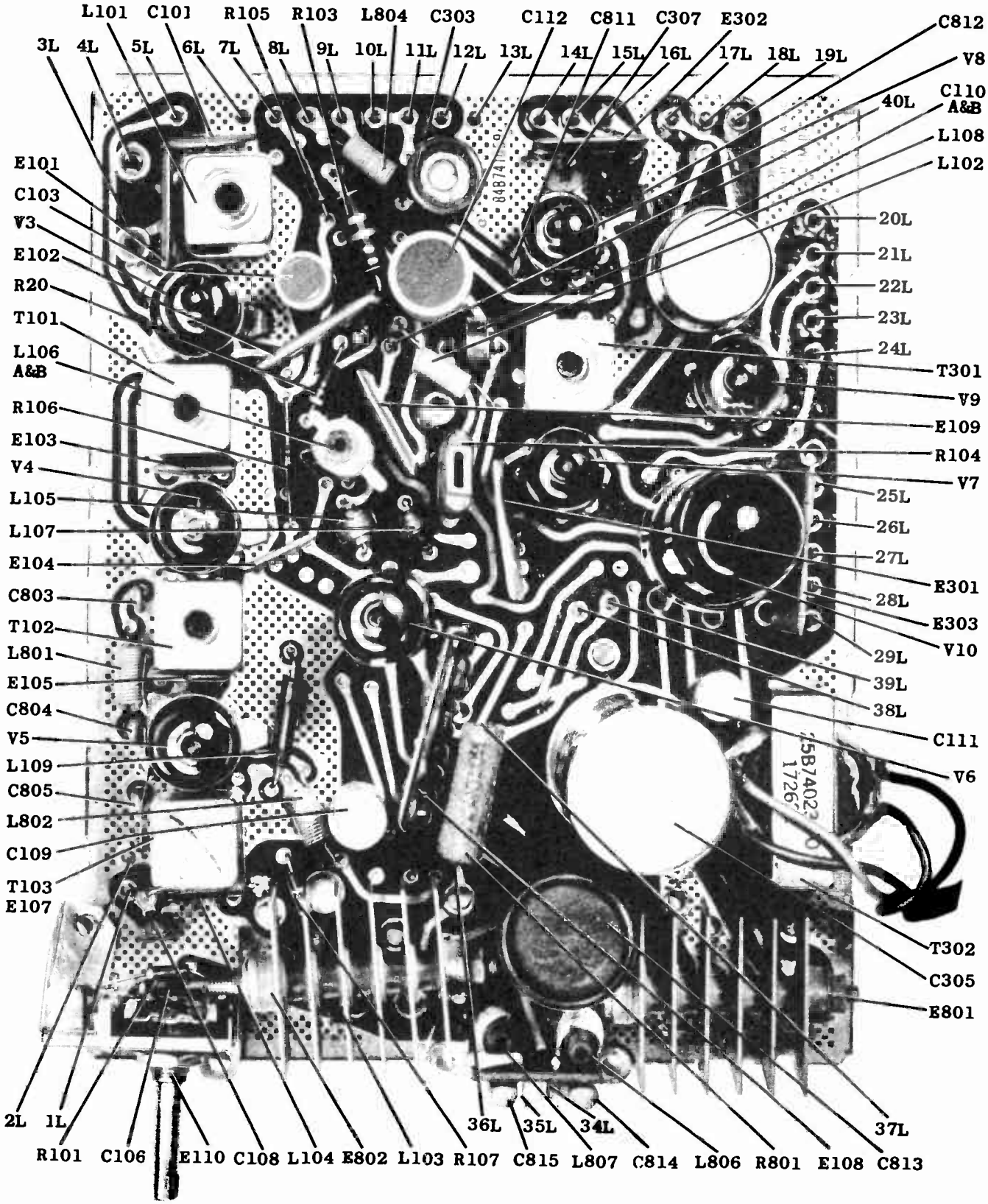

FIGURE 4. "I"-PANEL PARTS LOCATION

MOTOROLA Chassis TS-422, Models 17T27 and 17T28 Series, Continued

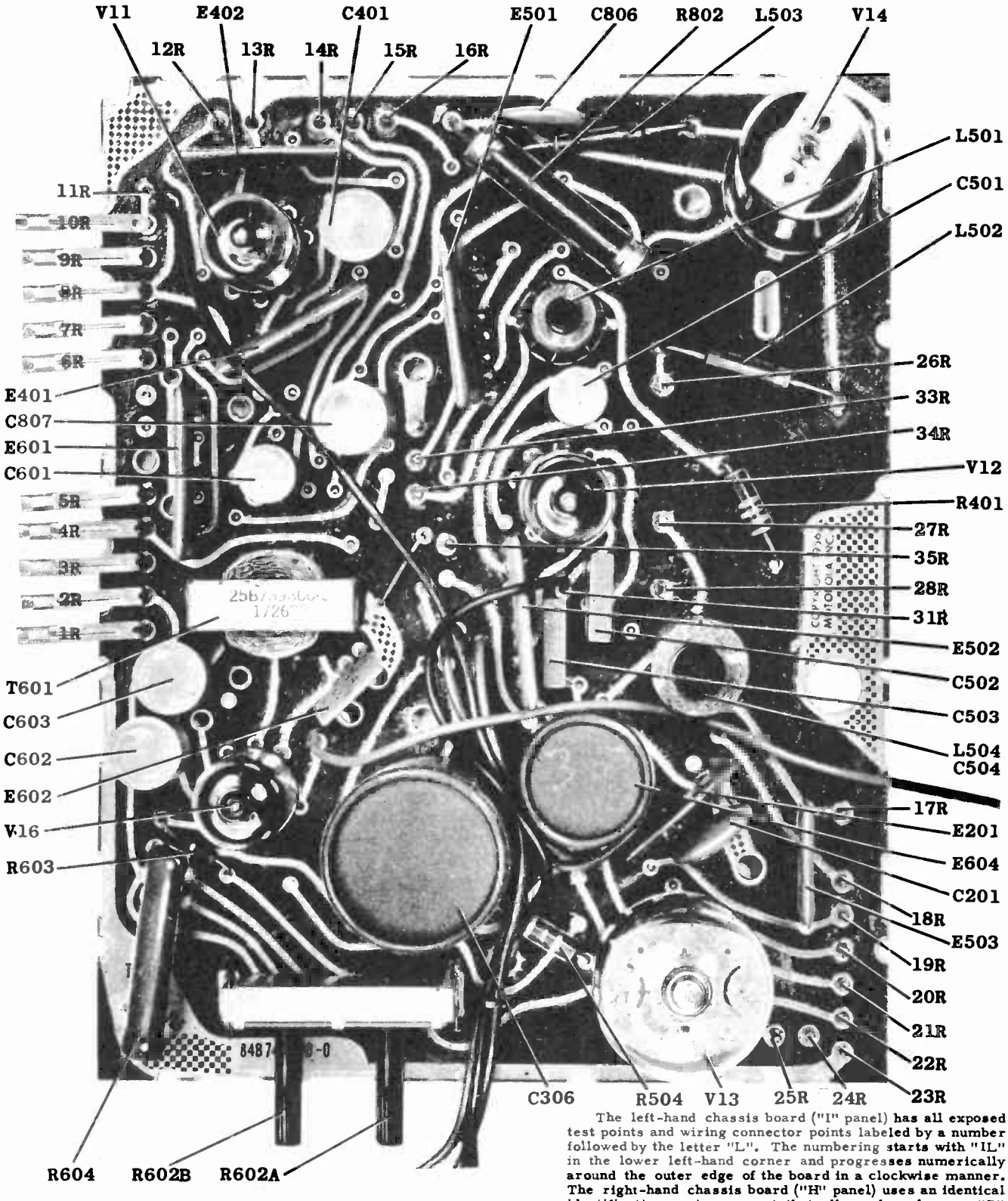

The left-hand chassis board ("I" panel) has all exposed test points and wiring connector points labeled by a number followed by the letter "L". The numbering starts with "IL" in the lower left-hand corner and progresses numerically around the outer edge of the board in a clockwise manner. The right-hand chassis board ("H" panel) uses an identical identification system except that all numbers have an "R" suffix. This system makes it possible to instantly locate any test point physically on either the left or right-hand chassis... when transferring information from the schematic to the actual receiver.

FIGURE 6. "H"-PANEL PARTS LOCATION

MOTOROLA INC.

Chassis TS-422
Models 17T27, 17T28 Series
(Continued)

PICTURE TUBE REPLACEMENT

The picture tube is secured to the cabinet front and the easiest method of removal is to remove the front of the cabinet and then remove the picture tube. In such case, the tuner will remain with the cabinet wraparound (tuner knobs must be removed) and the other controls will remain with the cabinet front. If it is desired to refrain from making any wire disconnections, the chassis may be loosened and moved forward to such position that the cabinet front can be tilted to the required position to remove the picture tube.

PROCEDURE

1. Remove the five bolts securing the receiver chassis to the bottom of the cabinet.

2. Remove the fine tuner and channel selector knobs.

3. Remove the two upper and two lower screws holding the cabinet front to the wraparound.

4. Tilt cabinet front outward and slide chassis forward until bolt of metal band securing picture tube to cabinet front is accessible. Remove all connections to the picture tube and remove the tube. NOTE: It is not necessary to remove the safety glass.

5. Replace black tape around edge of new picture tube and replace in reverse order to removal instructions.

REMOVING THE BACK COVER

The back cover is held in place by means of metal friction clamps arranged around the edges of the cover. The cover may be carefully pried off by using a screwdriver.

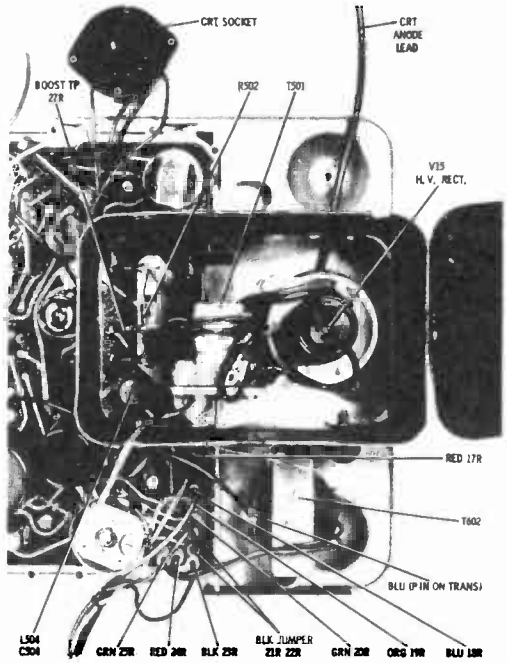

FIGURE 8. HIGH VOLTAGE SECTION PARTS-DETAIL

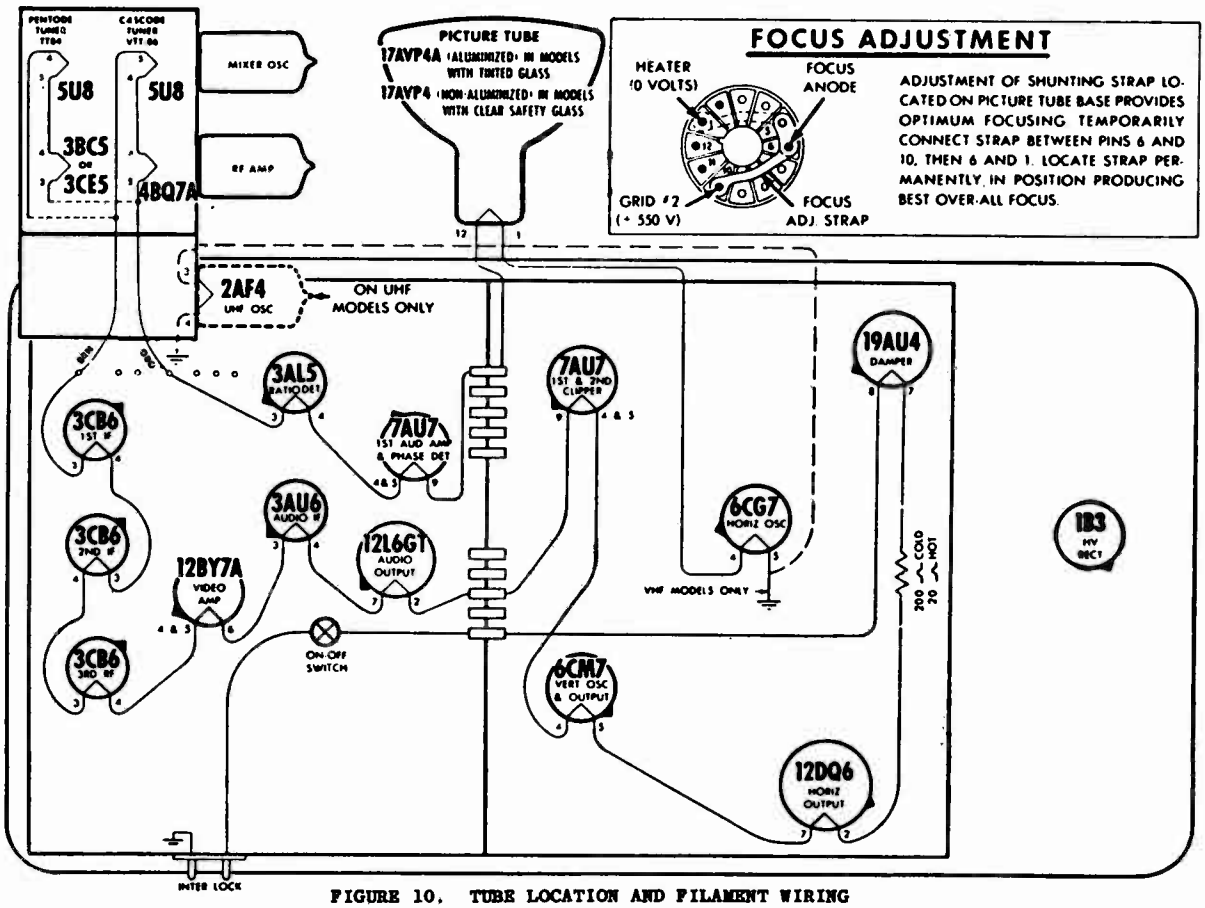

FIGURE 10. TUBE LOCATION AND FILAMENT WIRING

MOTOROLA Chassis TS-422, Alignment Information (Continued)

IF AND MIXER ALIGNMENT

Equipment Required and Notes

Sweep Generator: 18 to 220 Mc, 12 Mc sweep width, linear output and capable of .1 volt output

Accurately calibrated, adjustable marker generator and/or AM signal generator.

Cathode Ray Oscilloscope: preferably with calibrated attenuator

Variac: To set line voltage to required value of 117 volts

Notes

Keep the marker generator output low at all times to prevent marker from distorting the response curve.

Some coils resonate at two settings of the core...follow the core-setting instructions for each coil as given in the procedure.

For a complete receiver alignment (video IF, sound and tuner), use the following procedure in sequence.

Always use an isolation transformer when servicing this receiver.

REQUIRED PRELIMINARY STEPS

1. REMOVE...the deflection yoke lead plugs to eliminate RF interference. The deflection yoke leads are located just to the left of the HORIZONTAL SIZE control and numbered 17R, 18R, 19R, 20R, 21R, 22R and 23R. Before attempting to remove the leads, remove the hex head screw securing them to the chassis. See Figure 3.

2. CONNECT...a 1.8K ohm resistor (40 watts or more) from chassis ground to B++ bus to normalize the voltages: Connect the voltage normalizing resistor between red lead (33L) of the audio output transformer (T-302) and any ground point of the chassis. See Figure 13.

3. APPLY...minus 3 volts to the IF AGC test point by connecting a 3 volt battery between the IF AGC test point (12L) and ground point of the chassis. The positive end of the battery goes to chassis ground. See Figure 13.

4. DISABLE TUNER OSCILLATOR...by grounding pin #9 of V-2 (5U8).

5. TURN...the channel selector to channel #13. Retain in this position for the entire IF alignment procedure.

6. TUNE...the sweep generator center frequency to 44 Mc with a sweep width of 10 Mc, and do not change these settings. Adjust generator output below point of receiver limiting (approximately 3 to 5 volts peak-to-peak at the detector load).

7. ADJUST...the receiver's contrast control to minimum (fully counterclockwise) and set the area selector switch to the "local" position.

8. CONNECT...a .001 to .005 mfd capacitor in series with the generator lead, and connect generator as given in the procedure.

9. REMOVE...the receiver's antenna and short out terminals, if required, to remove transmitted signals.

10. CONNECT THE OSCILLOSCOPE...with a 47K ohm resistor in series with the input lead, to the VIDEO DETECTOR TEST POINT (1L) (see Figure 13). This location does not change for the entire IF and mixer alignment.

PROCEDURE

With the sweep generator connected to the IF TEST point (3L) and the oscilloscope at the VIDEO DETECTOR TEST point (1L)...

1. SET...the marker generator to 41.25 Mc and:

2. ADJUST...the 41.25 Mc trap (top of T-101) for the trap dip shown in curve A. The core of the trap must be tuned away from the chassis...toward the top of the coil.

3. SET...the marker generator to 47.25 Mc and:

4. ADJUST...the 47.25 Mc trap (top of T-102) for the trap dip shown in curve A. The core of the trap must be tuned away from the chassis...toward the top of the coil.

5. SET...the marker generator to 42.25 Mc and:

6. ADJUST...the 1st IF transformer (bottom slug of T-101) to position the 42.25 Mc marker as shown in curve A. The core of this coil must be tuned toward the chassis...this is to make sure that the core moves away from the trap core of step #2.

7. SET...the marker generator to 45.75 Mc and:

8. ADJUST...the 2nd IF transformer (bottom slug of T-102) to position the 45.75 Mc marker as shown in curve A. The core of this coil must be tuned toward the chassis...this is to make sure that the core moves away from the trap core of step #4.

9. ADJUST...the 3rd IF transformer (T-103) to shape the center of the curve for best symmetry and least tilt (approximately 44 Mc).

10. RE-CHECK...the settings of the traps as well as the 1st, 2nd and 3rd IF coils to make sure they are correct and match the curve as given in Figure 13.

11. MOVE...the sweep generator from the IF TEST point (3L) and connect it to the MIXER TEST RECEPTACLE (point F) located on the tuner (see tuner illustration).

NOTE: The tuner oscillator should be inoperative for the following procedure and the channel selector should be on #13.

12. ADJUST...sweep generator output to give 3 to 5 volts peak-to-peak at the input of the oscilloscope. Generator frequency same as for preceding alignment (44 Mc).

13. Short out R-9 or compensate by allowing 5% tilt to low side of converter response as in Figure 13.

14. ADJUST...the mixer plate coil (L-15) and the 1st IF grid coil (L-101) for the response and markers shown in Figure 13, curve B.

NOTE: Make certain that the cores of these coils are tuned away from the center of the coil. Remove bias battery and ascertain whether any IF regeneration is taking place. Also, the bandwidth should not change more than .2 Mc (200 Kc).

SOUND ALIGNMENT

This alignment may be made by injecting an accurate 4.5 Mc signal into the VIDEO DETECTOR test point (see IF alignment drawing). A second practical method is the use of a station transmission after a preliminary alignment is made with a fairly accurate generator. The latter method will produce an accurate 4.5 Mc signal at the output of the video detector.

The alignment procedure will be the same whether the test signal originates from a station or from a crystal controlled generator.

PRELIMINARY STEPS

1. Connect positive lead of VTVM to the RATIO DETECTOR test point (14-L) (See Figure 13). Connect negative meter lead to chassis ground...ground connection may be at the shield lead just to the right of the RATIO DETECTOR test point or any convenient ground point of the chassis.

2. Set contrast control to maximum (fully clockwise).

3. Remove oscilloscope used in IF alignment.

MOTOROLA Chassis TS-422, Models 17T27 and 17T28 Series, Continued

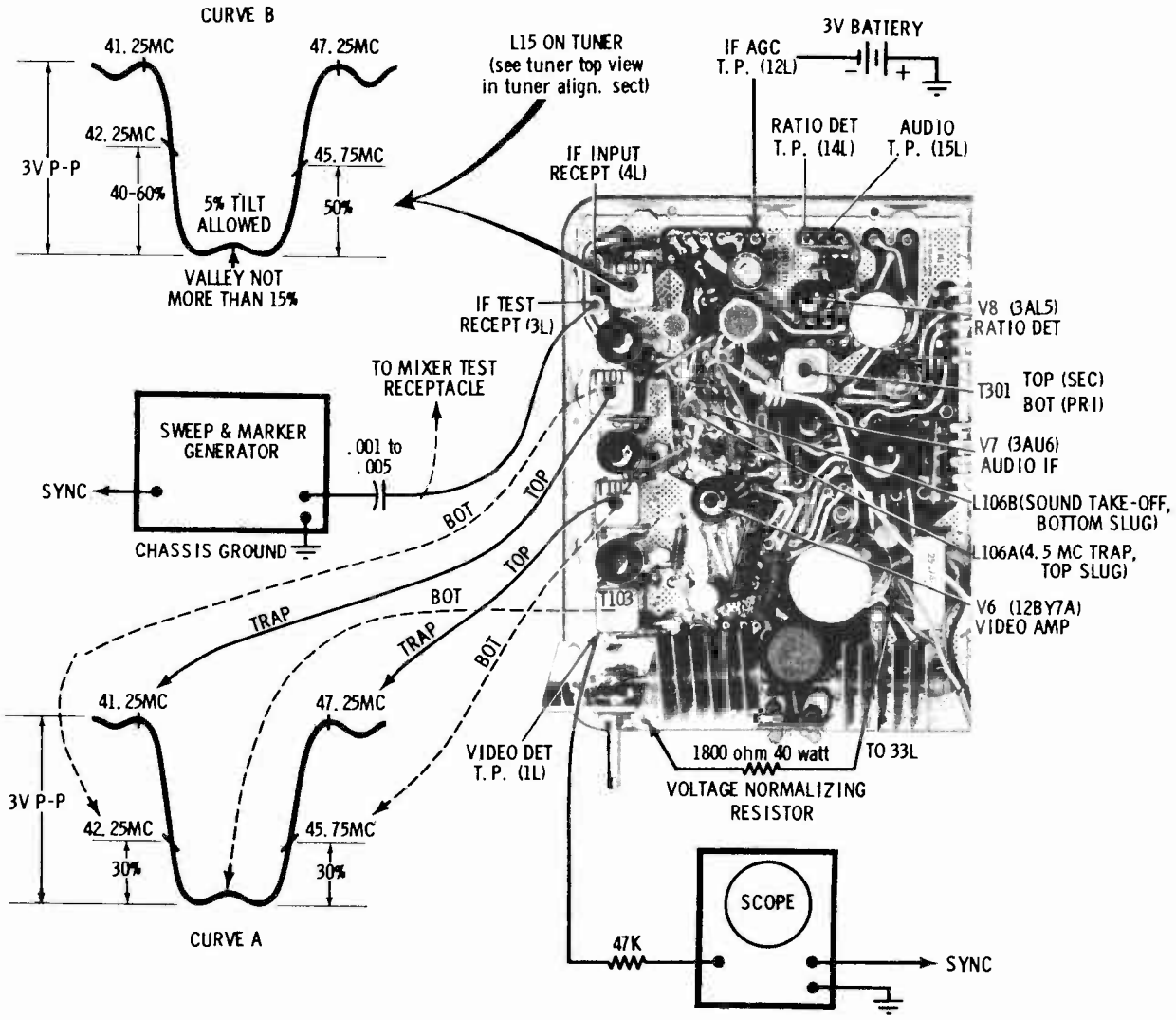

FIGURE 13. IF & SOUND ALIGNMENT DETAIL

4. Remove short on tuner oscillator.

5. Tune in a transmitted test signal--or--connect a 4.5 Mc crystal controlled generator to the VIDEO DETECTOR test point (1L) in series with a .005 mf capacitor.

6. Adjust signal generator output to maintain 5 to 10 volts at the VTVM--or--keep station signal as near this value as possible.

PROCEDURE

1. ADJUST...audio take-off coil (L-106B) and ratio detector primary (bottom) T-301, for maximum deflection.

2. Using an ohmmeter, carefully match two 100K 1/2 watt resistors as closely as possible as to resistance value. Connect these two matched resistors in series from test point (14-L) to chassis ground (see Figure 13).

3. CONNECT...ground VTVM lead to junction of the two 100K resistors and the positive lead to the audio test point (15-L).

4. ADJUST...the secondary (top) of the ratio detector transformer T-301 for a zero voltage reading between sharp positive and negative peaks. This adjustment should be very sharp and critical.

NOTE: The primary and secondary of the ratio detector transformer (T-301) have two tuning points; one with the cores toward the outside of the coils and one with the cores toward the inside of the coil. The proper position of the cores is toward the outside of the coil....away from each other.

4.5 MC TRAP ADJUSTMENT

1. Carefully tune receiver to local station and advance the contrast control.

2. Turn the area selector switch to the fringe position.

3. Adjust tuner's local oscillator (with the fine tuning control) to bring the 4.5 Mc interference strongly into the picture.

4. ADJUST...4.5Mc trap(L-106A) to find the two points of adjustment at which the sound beat is just noticeable on the picture tube screen. Rotate the core toward center of the two points. Use minimum amount of inductance (core out of coil) that will result in no apparent beat interference.

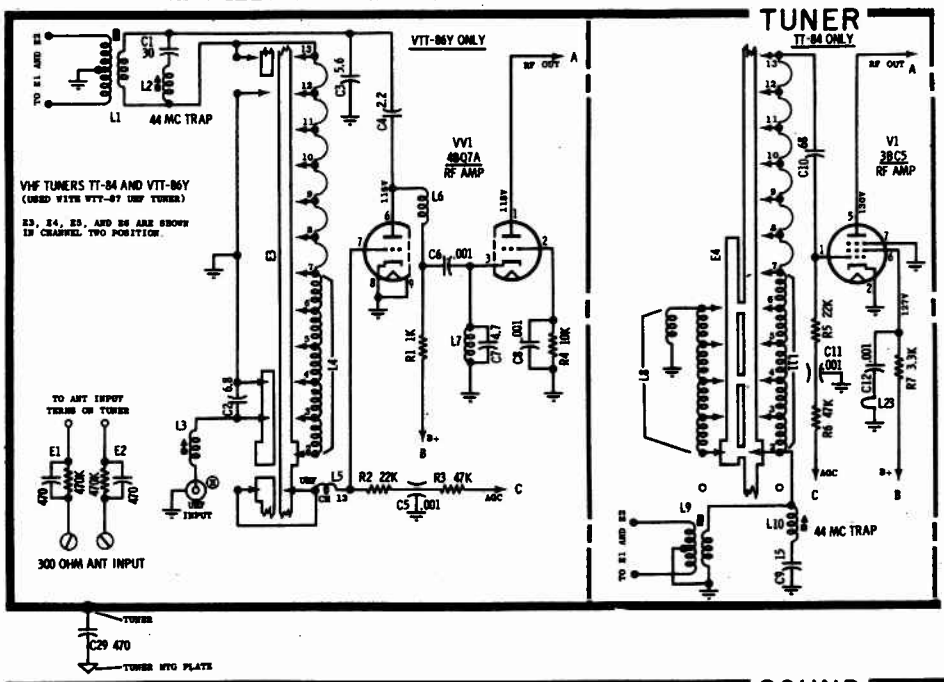

MOTOROLA
Circuit Chassis TS-422A

For main circuit diagram see the next two pages. Points A, B, C, X, Y, Z, connect to corresponding points of main diagram.

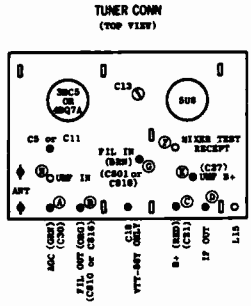

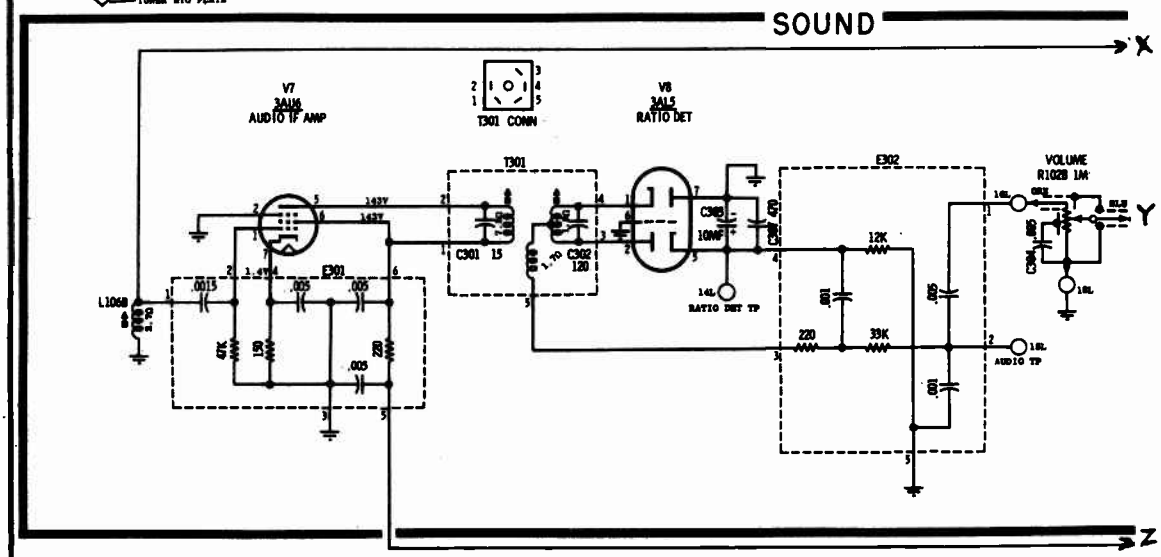

Correspondingly marked points of this circuit and of the main schematic on the next two pages, connect together. This separation is made for printing convenience.

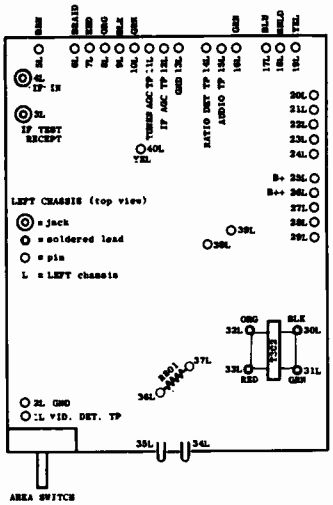

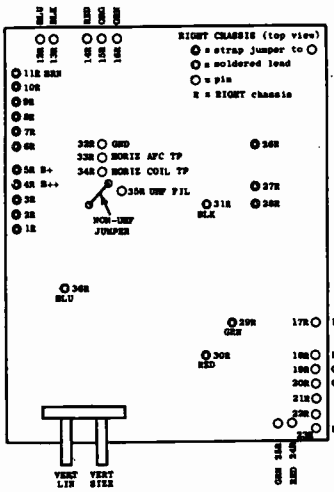

PRODUCTION CHANGES

TS-422A-00-1 thru A-01-2

Chassis Coding	Changes
A-00-1	Same as A-01 (horizontal size) change.
A-01	To improve horizontal size C-504 (56 mmf-5000V) added between lugs 26R and 27R. To increase voltage at tuner R-105 (1K) changed to L-112 (.52 microhenry choke).
A-01-1	To correct a tweet problem on channel 8 in fringe areas, T-103 (3rd IF & video detector) changed to 24K742987. New T-103 has L-113 (tweet choke) between positive side of E-107 (detector crystal) and lug #3 of T-103; C-113 (470 mmf) moved inside T-103.
A-01-2	To eliminate IF interference L-810 added between pin #5 of V-12 (6CG7) and 35R. This change affects only the "Y" version (UHF) chassis.

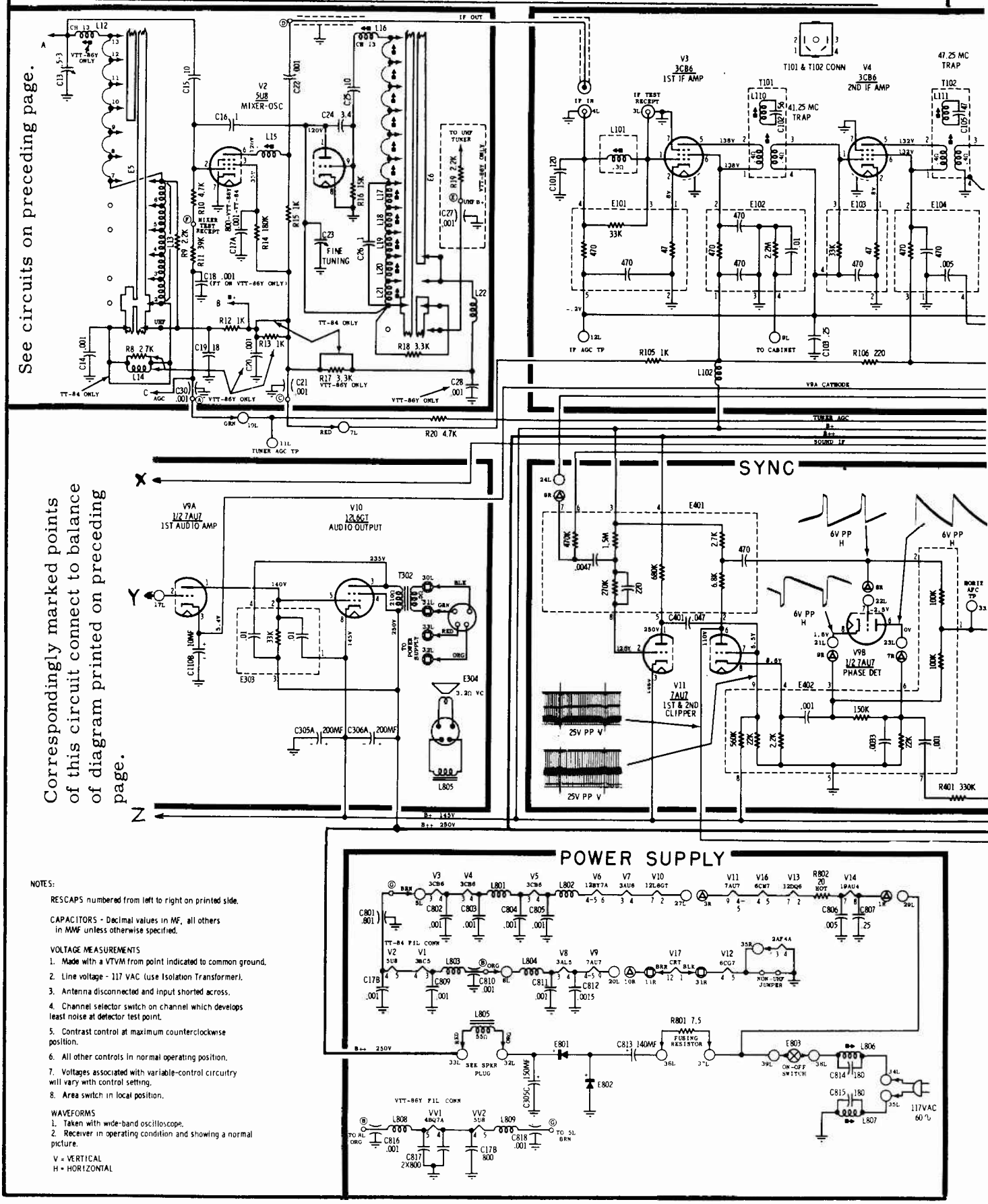

NOTES:

RESCAPS numbered from left to right on printed side.

CAPACITORS - Decimal values in MF, all others in MMF unless otherwise specified.

VOLTAGE MEASUREMENTS

1. Made with a VTVM from point indicated to common ground.
2. Line voltage - 117 VAC (use Isolation Transformer).
3. Antenna disconnected and input shorted across.
4. Channel selector switch on channel which develops least noise at detector test point.
5. Contrast control at maximum counterclockwise position.
6. All other controls in normal operating position.
7. Voltages associated with variable-control circuitry will vary with control setting.
8. Area switch in local position.

WAVEFORMS

1. Taken with wide-band oscilloscope.
2. Receiver in operating condition and showing a normal picture.

V = VERTICAL
H = HORIZONTAL

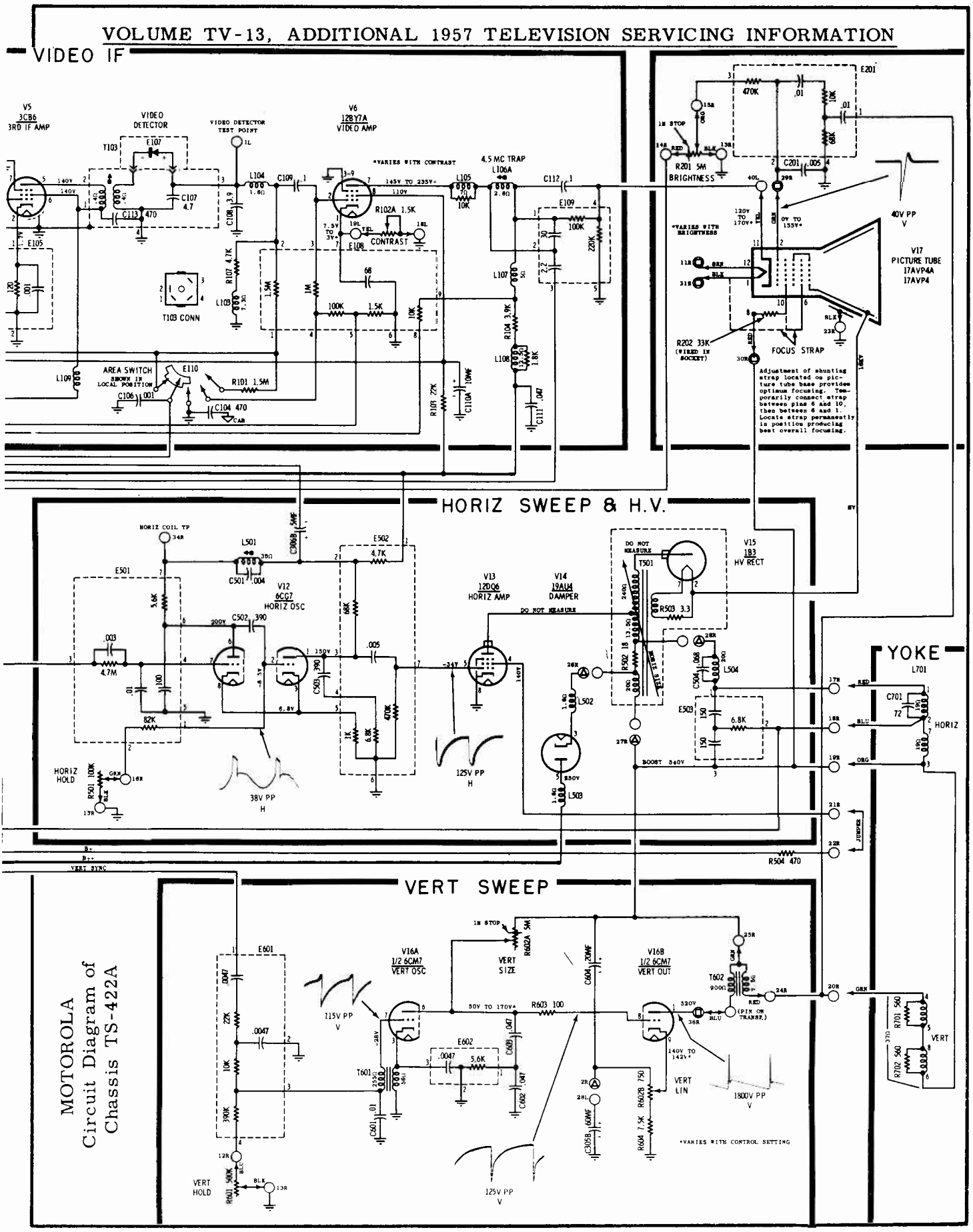
VIDEO IF
V5
3CB6
3RD IF AMP
VIDEO DETECTOR
VIDEO DETECTOR TEST POINT
V6
12BY7A
VIDEO AMP
*VARIES WITH CONTRAST
4.5 MC TRAP
R102A 1.5K
CONTRAST
T103 CONN
AREA SWITCH
SHOWN IN LOCAL POSITION
R201 5M
BRIGHTNESS
*VARIES WITH BRIGHTNESS
R202 33K
(WIRED IN SOCKET)
FOCUS STRAP
V17
PICTURE TUBE
17AVP4A
17AVP4
40V PP
V
Adjustment of shunting strap located on picture tube base provides optimum focusing. Temporarily connect strap between pins 6 and 10, then between 6 and 1. Locate strap permanently in position producing best overall focusing.
HORIZ SWEEP & H.V.
HORIZ COIL TP
V12
6CG7
HORIZ OSC
V13
12DQ6
HORIZ AMP
V14
19AU4
DAMPER
DO NOT MEASURE
V15
1B3
HV RECT
HORIZ HOLD
38V PP
H
125V PP
H
BOOST 840V
YOKE
L701
HORIZ
VERT
JUMPER
R504 470
VERT SYNC
VERT SWEEP
V16A
1/2 6CM7
VERT OSC
VERT SIZE
V16B
1/2 6CM7
VERT OUT
115V PP
V
125V PP
V
1800V PP
V
VERT LIN
VERT HOLD
*VARIES WITH CONTROL SETTING
MOTOROLA
Circuit Diagram of
Chassis TS-422A

MOTOROLA Chassis TS-422, Models 17T27 and 17T28 Series, Continued

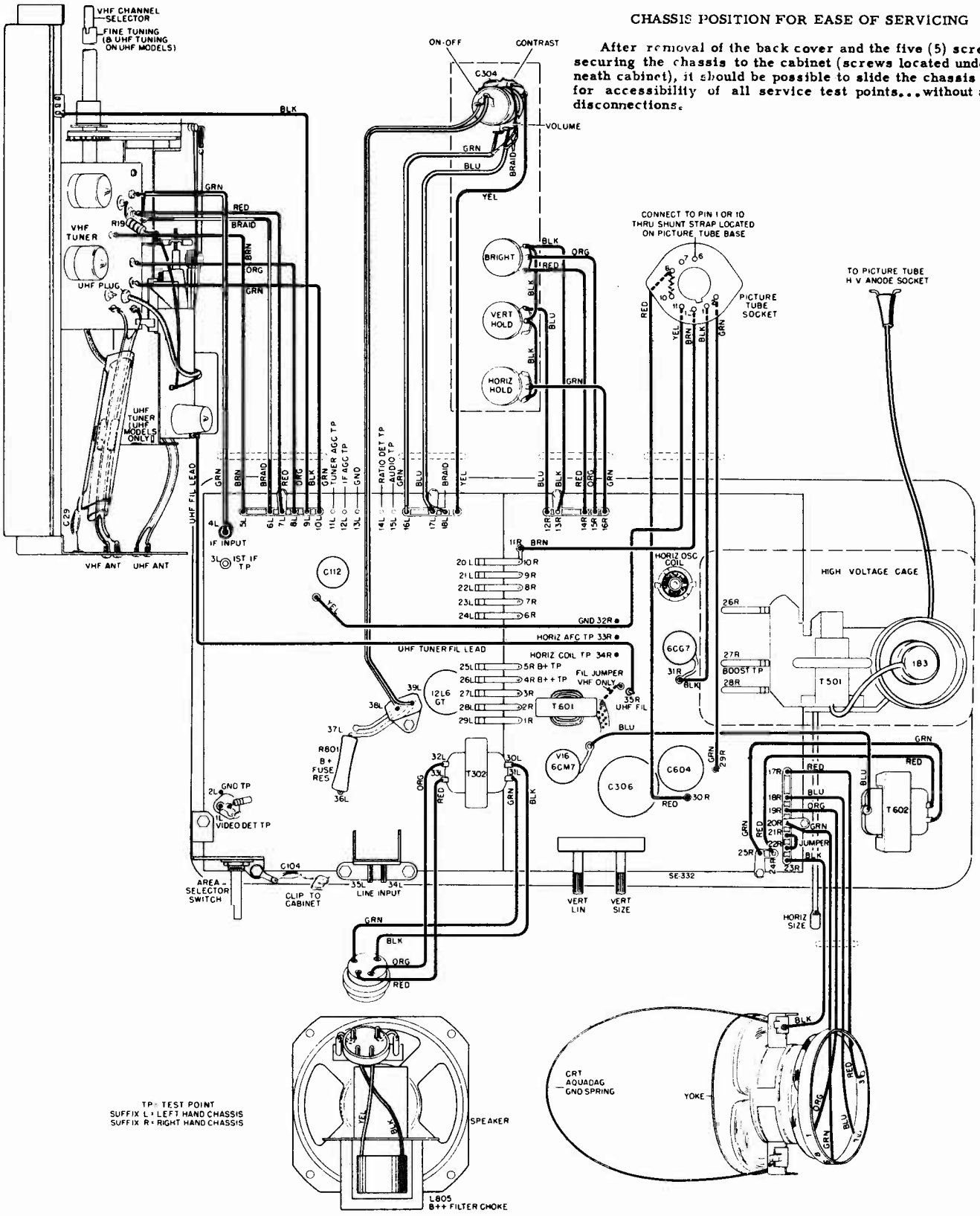

CHASSIS POSITION FOR EASE OF SERVICING

After removal of the back cover and the five (5) screws securing the chassis to the cabinet (screws located underneath cabinet), it should be possible to slide the chassis out for accessibility of all service test points...without any disconnections.

FIGURE 3. CONTROLS, CONNECTIONS AND TEST POINT LOCATIONS

MOTOROLA

CHASSIS
TS-539

CHASSIS DESCRIPTION

TS-539 SERIES

These receivers are 20-tube chassis (including two rectifier tubes) using a 21ATP4A or 24YP4 aluminized rectangular picture tube (90 degree deflection angle) plus a germanium diode detector of the plug-in type.

The entire receiver is contained on a single vertically mounted chassis. The picture tube is mounted independently to the inside of the cabinet front (bezel).

A switch-type VHF tuner incorporates a cascode type amplifier and has provision for individual channel oscillator adjustment by means of screws which may be reached from the front of the cabinet. The antenna, RF primary and RF secondary as well as the oscillator switch wafers are removable for ease of servicing.

All tuners of this model are equipped with a motor drive unit for channel selection. The motor may be controlled by a front panel push-button or by remote control units (remote control units are considered accessories and must be purchased independently of the receiver). The motor-drive unit is equipped with an electro-mechanical indexing system giving 13-channel selection or any part thereof.

Chassis having a "Y" suffix contain a factory-installed "continuous tuning" UHF tuner.

WTS-539 Same as the TS-539 except for the addition of a pilot light.

VTS-539 Same as the TS-539 except for the addition of a tone control and pilot light.

TTS-539 Same as the TS-539 except for the addition of a tone control and two pilot lights. One of the pilot lights is used for a second horizontally-mounted dial scale located at the top center of the cabinet.

RECEIVER MODEL BREAKDOWN CHART

Model	Description	TV Chassis
A21C5B	Consolette, blonde: masonite	TTS-539
YA21C5B	Consolette, blonde: masonite	TTS-539Y
A21C5M	Consolette, mahogany: masonite	TTS-539
YA21C5M	Consolette, mahogany: masonite	TTS-539Y
A21F6W	Combination, walnut: wood	TTS-539
YA21F6W	Combination, walnut: wood	TTS-539Y
A21K54B	Console, blonde: masonite	TS 539
YA21K54B	Console, blonde: masonite	TS-539Y
A21K54M	Console, mahogany: masonite	TS-539
YA21K54M	Console, mahogany: masonite	TS-539Y
A21K56B	Console, blonde: masonite	WTS-539
YA21K56B	Console, blonde: masonite	WTS-539Y
A21K56M	Console, mahogany: masonite	WTS-539
YA21K56M	Console, mahogany: masonite	WTS 539Y
A21K57B	Console, blonde: masonite	WTS-539
YA21K57B	Console, blonde: masonite	WTS-539Y
A21K57M	Console, mahogany: masonite	WTS-539
YA21K57M	Console, mahogany: masonite	WTS-539Y
A21K57MCH	Console, champagne mahogany: masonite	WTS-539
YA21K57MCH	Console, champagne mahogany: masonite	WTS-539Y
A21K58B	Console, blonde: masonite	WTS-539
YA21K58B	Console, blonde: masonite	WTS-539Y
A21K58M	Console, mahogany: masonite	WTS-539
YA21K58M	Console, mahogany: masonite	WTS-539Y
A21K59M	Console, mahogany: masonite	VTS-539
YA21K59M	Console, mahogany: masonite	VTS-539Y
A21K59MCH	Console, champagne mahogany: masonite	VTS-539
YA21K59MCH	Console, champagne mahogany: masonite	VTS-539Y
A21K60B	Console, blonde: wood	TTS-539
YA21K60B	Console, blonde: wood	TTS-539Y
A21K60M	Console, mahogany: wood	TTS-539
YA21K60M	Console, mahogany: wood	TTS-539Y

Model	Description	TV Chassis
A21K61MCH	Console, champagne mahogany: wood	TTS-539
Y21K61MCH	Console, champagne mahogany:	TTS-539Y
A21K67		TS-539
A21K61W	Console, walnut: wood	TTS-539
YA21K61W	Console, walnut: wood	TTS-539Y
A21K62M	Console, mahogany: wood	TTS-539
YA21K62M	Console, mahogany: wood	TTS-539Y
A21K63CW	Console, cherry: wood	TTS-539
YA21K63CW	Console, cherry: wood	TTS-539Y
A21T33BG	Table, grained blonde: metal	TS-539
YA21T33BG	Table, grained blonde: metal	TS-539Y
A21T33CH	Table, charcoal: metal	TS-539
YA21T33CH	Table, charcoal: metal	TS-539Y
A21T33MG	Table, grained mahogany: metal	TS-539
YA21T33MG	Table, grained mahogany: metal	TS-539Y
A21T35B	Table, blonde: masonite	TS-539
YA21T35B	Table, blonde: masonite	TS-539Y
A21T35M	Table, mahogany: masonite	TS-539
YA21T35M	Table, mahogany: masonite	TS-539Y
A21T36B	Table, blonde: masonite	WTS-539
YA21T36B	Table, blonde: masonite	WTS-539Y
A21T36M	Table, mahogany: masonite	WTS-539
YA21T36M	Table, mahogany: masonite	WTS-539Y
A24K14B	Console, blonde: masonite	VTS-539
YA24K14B	Console, blonde: masonite	VTS-539Y
A24K14M	Console, mahogany: masonite	VTS-539
YA24K14M	Console, mahogany: masonite	VTS-539Y
A24K15M	Console, mahogany: wood	VTS-539
YA24K15M	Console, mahogany: wood	VTS-539Y
A24K15MCH	Console, champagne mahogany: wood	VTS-539
YA24K15MCH	Console, champagne mahogany: wood	VTS-539Y
A24T6B	Table, blonde: masonite	VTS-539
YA24T6B	Table, blonde: masonite	VTS-539Y
A24T6M	Table, mahogany: masonite	VTS-539
YA24T6M	Table, mahogany: masonite	VTS-539Y

The service material on these sets is continued on the next 19 pages. The order of presentation is as follows: important adjustments, IF and mixer alignment, operation of automatic tuning system and trouble shooting, circuit diagrams, production changes, remote control, and waveshapes. This factory-released material will enable you to service this group of Motorola sets.

MOTOROLA Chassis TS-539, Important Adjustments (Continued)

REMOVING THE BACK COVER

On metal cabinets, the back cover is held in place by means of metal friction clamps arranged around the edges of the cover and one self-tapping screw located between the serial number and the power cord connections. After removal of the screw, the cover may be carefully pried off by means of a screwdriver.

On masonite cabinets, the back cover is held in place by means of screws around the edge of the cover.

DEFLECTION YOKE ADJUSTMENT

If the deflection yoke shifts, the picture will be tilted. To correct, loosen the clamp at the rear of the deflection yoke holding the rubber wedge against the yoke. Push the yoke as far forward as possible, then rotate until the picture is straight. Loosen rubber wedge clamp and push rubber wedge tight against rear of yoke. Release wedge clamp.

RASTER CORRECTOR MAGNETS

Raster corrector (pin-cushion) magnets, when used, will be found on either side of the deflection yoke to straighten the sides of the raster. They are correctly set at the factory but if moved in shipping, or if the yoke has been replaced, they may require readjustment. Adjust in the following manner:

1. Reduce raster size so that its sides are just visible.
2. Loosen screws holding magnet mountings.
3. Move corrector magnets forward or backward so that raster sides are straight.
4. Tighten screws holding magnet mountings.

HORIZONTAL OSCILLATOR ADJUSTMENT

The HORIZONTAL HOLD control should have a sync range of approximately 30 degrees. If the control is too critical, adjust HORIZONTAL OSCILLATOR COIL as follows:

1. Set all controls for a normal picture.
2. Short HORIZ AFC to ground with a piece of wire at pin #4 of the SERVICE TEST RECEPTACLE.
3. Connect a .1 mfd 400 volt capacitor across L-501 (HORIZ OSC COIL) by using pins #2 and #3 of the SERVICE TEST RECEPTACLE.
4. Adjust HORIZONTAL HOLD control (front panel) to the point where the picture almost remains stationary...as far as the horizontal sync is concerned.
5. Remove the .1 mfd capacitor shunting the HORIZ OSC COIL and without turning the horizontal hold control, adjust the HORIZONTAL OSCILLATOR COIL to the center of the range in which the picture almost remains in sync horizontally. (Use opening located between VERT SIZE and VERT LIN control shafts to reach the coil's screw.)
6. Remove the wire shorting HORIZ AFC to ground and adjust HORIZONTAL HOLD control (front panel) so that no fold-over appears on either side of the raster.

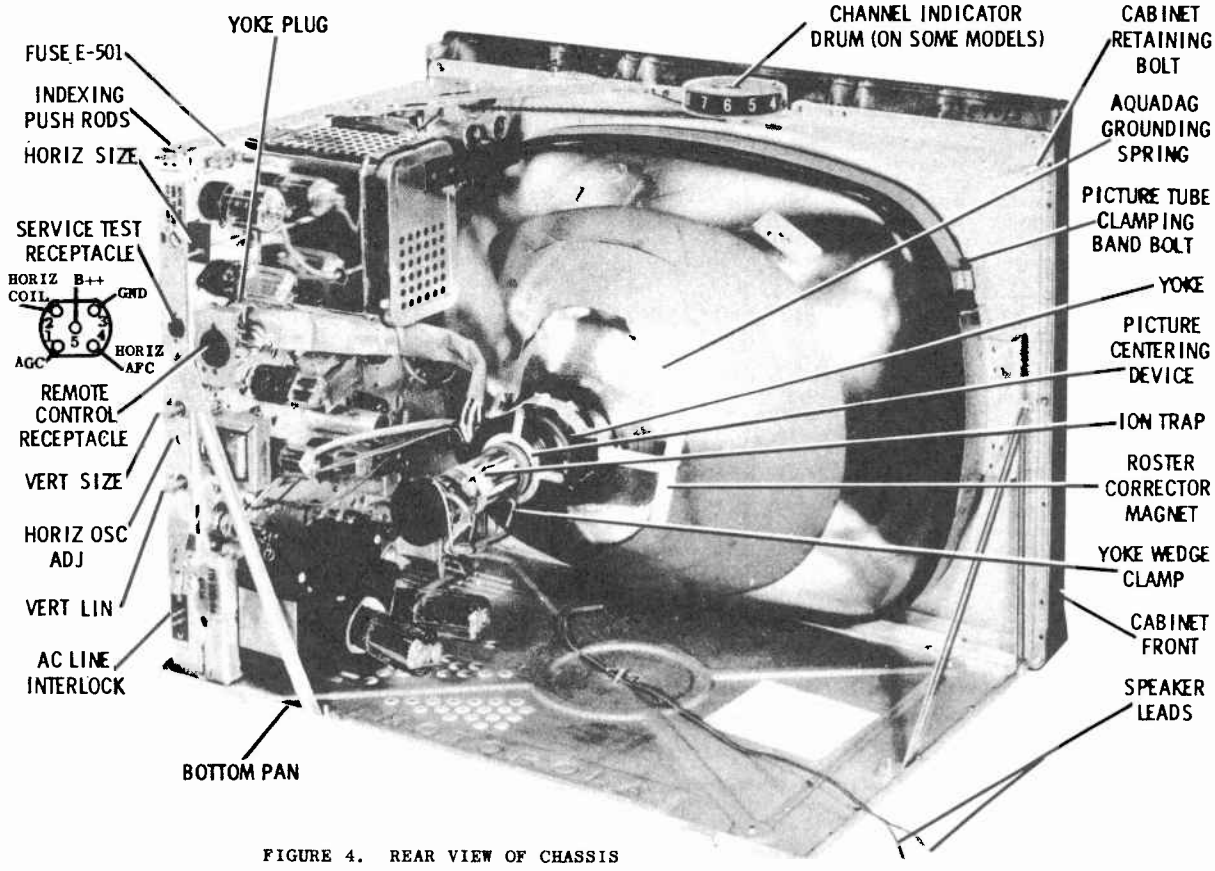

FIGURE 4. REAR VIEW OF CHASSIS

MOTOROLA Chassis TS-539, Alignment Information (Continued)

IF AND MIXER ALIGNMENT

Equipment Required and Notes

Sweep Generator: 18 to 220 Mc, 12 Mc sweep width, linear output and capable of .1 volt output.

Accurately calibrated, adjustable marker generator and/or AM signal generator.

Cathode Ray Oscilloscope: preferably with calibrated attenuator.

Variac: To set line voltage to required value of 117 volts.

Keep the marker generator output low at all times to prevent marker from distorting the response curve.

Some coils resonate at two settings of the core...follow the core setting instructions for each coil as given in the procedure.

REQUIRED PRELIMINARY STEPS

1. REMOVE...the yoke plug to eliminate RF interference. Connect an 1800 ohm resistor (40 watts or more) from chassis ground to 250 volt bus to normalize the voltages. (Use pins #3 and #5 of SERVICE TEST RECEPTACLE.)

2. APPLY...minus 6 volts to IF AGC by connecting a 6-volt battery between pin #1 (IF AGC bus) of the SERVICE TEST RECEPTACLE and ground. Positive side of battery goes to ground (see illustration).

3. DISABLE TUNER OSCILLATOR...by grounding pin #9 of V-2 (6U8), and turn channel selector to channel #13.

4. TUNE...the sweep generator center frequency to 44 Mc with a sweep width of 10 Mc, and do not change these settings. Adjust generator output below point of receiver limiting (approximately 3 volts peak-to-peak at the detector load). Maintain 1 to 3 volts peak-to-peak at the input to the oscilloscope.

5. ADJUST...the receiver's contrast control to minimum (fully counterclockwise).

6. CONNECT...a .001 to .005 mf capacitor in series with the generator lead, and connect generator as given in the procedure.

7. REMOVE...the receiver's antenna and short out terminals, if required, to remove transmitted signals.

8. CONNECT THE OSCILLOSCOPE...with a 47K ohm resistor in series with the input lead, to the VIDEO DETECTOR TEST RECEPTACLE. This location does not change for the entire IF and mixer alignment.

PROCEDURE

With the sweep generator connected to the IF TEST RECEPTACLE and the oscilloscope at the VIDEO DETECTOR TEST RECEPTACLE.

1. DETUNE...the mixer transformer primary (T-1) located on the tuner chassis so that it is tuned out of the IF response curve bandpass. The core of this coil should be turned into the tuner (clockwise rotation from tube side of chassis), being careful not to turn the core to the extent of disengagement from the coil. Failure to position the core in this manner will upset the coupling and make alignment difficult, if not impossible.

2. ADJUST...the 1st IF transformer (T-102) to position the 42.25 Mc marker (set marker with marker generator) as shown in curve #3. The core must be tuned as far from chassis metal as possible (maximum clockwise position as viewed from the tube side of the chassis).

3. ADJUST...the 2nd IF transformer (T-103) to position the 45.75 Mc marker as shown in curve #3. The core must be tuned as far from the chassis metal as possible (maximum clockwise position as viewed from the tube side of the chassis).

4. ADJUST...the 3rd IF transformer (T-104) to shape the center of the curve for best symmetry and least tilt. The core must be tuned as far from the chassis metal as possible (maximum clockwise position as viewed from the tube side of the chassis).

5. MOVE...the sweep generator from the IF TEST RECEPTACLE and connect it to the MIXER TEST RECEPTACLE located on the tuner (see illustration).

6. ADJUST...the trimmer capacitor (C-101), mixer transformer secondary (T-101) and the bandwidth coil (L-101A bottom) to get the response curve and marker positions as shown in curve #2. It may be helpful to tune trimmer capacitor (C-101) near 42.25 Mc, the bandwidth coil (L-101A) to 45.75 Mc and mixer secondary (T-101) to the valley for "jack" action.

CORRECT CORE POSITIONS (for step #6)

a. The core of the mixer secondary transformer must be tuned as close as possible to chassis metal (maximum counterclockwise rotation position as viewed from the tube side of the chassis).

b. The core of the bandwidth coil must be tuned as far as possible from chassis metal (maximum counterclockwise position...as viewed from the PARTS SIDE of the chassis). REMEMBER: The core cannot be tuned from the tube side of the chassis without turning the trap coil slug unless a special alignment tool is used.

7. ADJUST...the 41.4 Mc trap (L-102) for the trap dip shown in curve #1. The core of the trap must be tuned as far as possible from chassis metal (maximum clockwise position as viewed from the tube side of the chassis).

8. ADJUST...the 47.25 Mc trap (L-101B) for the trap dip shown in curve #1. The core of the trap must be tuned as close as possible to chassis metal. (Maximum counterclockwise position as viewed from the tube side of the chassis.)

NOTE: To see the trap response clearly, it may be necessary to either increase the generator output appreciably, or remove the IF bias momentarily.

9. ADJUST...mixer transformer primary (T-1) into the center of the IF response, so as to place the markers as shown in curve #1. Add tilt (shown on curve) with this adjustment.

SOUND ALIGNMENT

This alignment is made by injecting an accurate 4.5 Mc signal into the VIDEO DETECTOR TEST RECEPTACLE (see IF alignment drawing or top view of chassis for location). A second practical method is the use of a station transmission. The latter method will produce an accurate 4.5 Mc signal at the output of the video detector.

The station signal method is given in the following procedure, however, the procedure would be the same whether the test signal originates from a station or from a generator.

PREPARATION AND TEST EQUIPMENT CONNECTIONS

1. Connect positive lead of VTVM from positive terminal of the 3 mfd electrolytic capacitor (C-311)...this is also pin 5 of V-10 (ratio detector). Connect negative meter lead to chassis ground.

2. Set contrast control at maximum (fully clockwise).

3. Remove oscilloscope used in IF alignment.

4. Remove short on tuner oscillator.

MOTOROLA Chassis TS-539, Alignment Information, Continued

PROCEDURE

5. Tune in a station--or--connect a 4.5 Mc crystal-controlled generator to the VIDEO DETECTOR TEST RECEPTACLE in series with a 3300 ohm resistor.

6. Adjust signal generator to maintain 5 to 10 volts at the VTVM--or--keep station signal as near this value as possible.

7. ADJUST...the audio take-off coil (L-302), interstage coil (L-303) and the primary of the ratio detector (T-301... tuned from the parts side of the chassis) for a maximum reading on the VTVM.

8. MOVE...the VTVM to the junction of R-310 (33K) and C-314 (.001 feed-thru). Other meter lead goes to ground.

9. ADJUST...the secondary of the ratio detector (T-301... tuned from tube side of chassis) for zero reading on the VTVM.

NOTE: The primary and secondary of the ratio detector transformer (T-301) have two tuning points; one with cores toward the outside of the coils and one with the cores toward the inside of the coil. The proper position of cores should be toward the outside of the coil.

4.5 MC TRAP ADJUSTMENT

1. Carefully tune receiver to local station and advance contrast control.

2. Adjust local oscillator (with fine tuning control) to bring the 4.5 Mc interference strongly into the picture.

3. ADJUST...sound trap (L-110) to find the two points of adjustment at which the sound beat is just noticeable on the picture tube screen. Rotate the core toward center of the two points. Use minimum amount of inductance (core out of coil) that will result in no apparent beat interference.

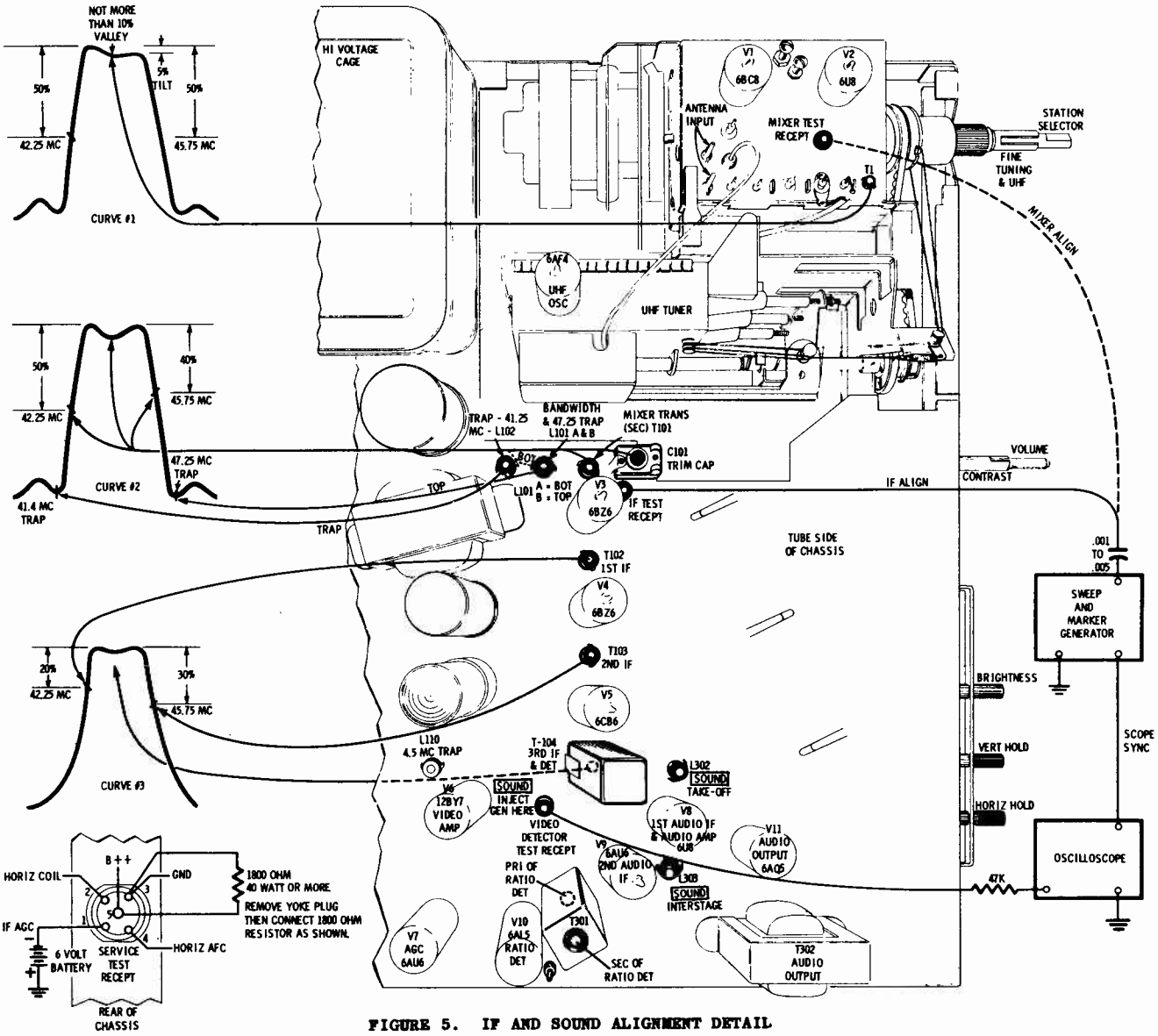

FIGURE 5. IF AND SOUND ALIGNMENT DETAIL

MOTOROLA Chassis TS-539, Automatic Tuning System (Continued)

AUTOMATIC TUNING SYSTEM

(GENERAL INFORMATION)

A completely motorized and fully automatic VHF tuning system is used in this series of TV receivers. The tuner may be pre-set to stop on any channel number...or to by-pass any channel number within the VHF band. The tuner is controlled by a front panel CHANNEL SELECTOR push-button which energizes the motor.

MOTOR SYSTEM

The tuner is powered by a fractional horsepower, 110 volt shaded-pole motor, coupled through a 3200 to 12 RPM step-down gear box, utilizing nylon and metal gears. When not energized, the driving motor must be out of gear with the tuner driving mechanism, so the tuner may be manually operated by the front panel CHANNEL SELECTOR knob when desired. Due to the large reduction ratio of the gears utilized between the driving motor and the tuner, it would be very difficult to turn the tuner by hand, if the motor were permanently geared to the tuner. The disengagement is accomplished by mechanically floating the armature (rotor) of the motor, partially out of the motor field coil. Since the rotor shaft is toothed to act as the first pinion of the gear train, this automatically disengages the rotor shaft from the gear box. The rotor is held disengaged from the gear box, and partially out of the motor field coil by means of three nickel-silver arms. These arms also perform the function of switch contact segments.

When the motor is energized, the magnetic attraction of the field coil pulls the rotor into the center of the motor frame. This performs the function of engaging the rotor pinion with the remainder of the gear train to drive the tuner. When the rotor is pulled into the motor frame, the contact arms are pulled into position to close the three switch sections. The individual contact segments of the armature (rotor) controlled switch perform the following operations: one set of contacts removes the receiver's sound by grounding the control grid of the audio output tube; the second set of contacts removes the receiver's raster by feeding a portion of B+ to the cathode of the picture tube, blanking it out...the third set of contacts shorts across the front panel channel selector pushbutton, so that release of the button will not stop the motorized tuning action. Once the tuner motor is energized by the front panel pushbutton or remote control unit, the tuner will continue changing channels until stopped by the channel indexing mechanism described in the following paragraphs.

METHOD OF INDEXING

Indexing of the tuner is accomplished by an index wheel attached to the rear drive shaft (channel selector shaft) of the tuner. This wheel has thirteen extensible fingers (cams) around its periphery. The fingers are designed to make physical contact with a "break" type switch connected in series with the motor and motor-lock contacts described in the preceding paragraph. Thus, as the tuner and rear wheel are turned through the channels of the VHF band, any projecting finger of the rear wheel will stop the tuner by opening the cam-switch and breaking the motor circuit. A strong detent on each channel eliminates problems of motor drift or drag as the mechanism ages.

The tripping cams of the index wheel are positioned for

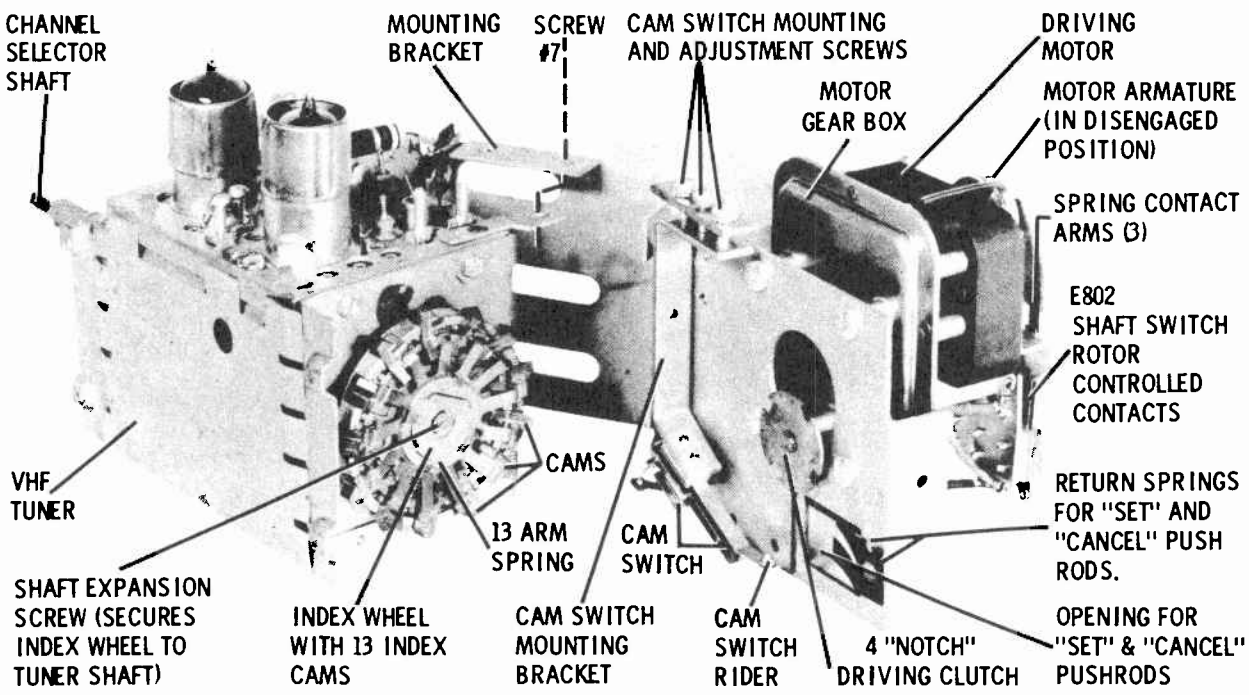

FIGURE 10. BREAK-APART VIEW OF TUNER AND MOTOR (Index wheel, cam switch and drive wheel are visible).

MOTOROLA Chassis TS-539, Automatic Tuning System, Continued

striking or passing the cam-switch-rider by means of two push rods extending the length of the chassis and projecting out the chassis rear. The push rods are accessible after the cabinet back cover is removed. The "set" push rod places the cam in the correct position to trip the cam-switch and "break" the motor circuit on any or all thirteen tuner positions. The "cancel" push rod moves the cams (any or all of the thirteen cams) to such position that they cannot strike the cam switch.

NOTE: Should the condition ever occur in which all the index cams are set for "bypassing". the tuner will run continuously until power is removed from the receiver. A similar action would occur if the cam switch were bent in such manner that the cams could not make physical contact with the cam-switch. THE ONLY SAFE METHOD OF STOPPING A TUNER IN THIS CONDITION IS TO REMOVE THE LINE CORD OR TURN THE SET "OFF" WITH THE PUSHBUTTON. ANY OTHER MEANS CAN DAMAGE THE MOTOR OR THE INDEXING MECHANISM.

The thirteen cams correspond to twelve VHF stations and one position for UHF. Thus, by the cam settings, the tuner will automatically stop or bypass any of the thirteen tuner positions.

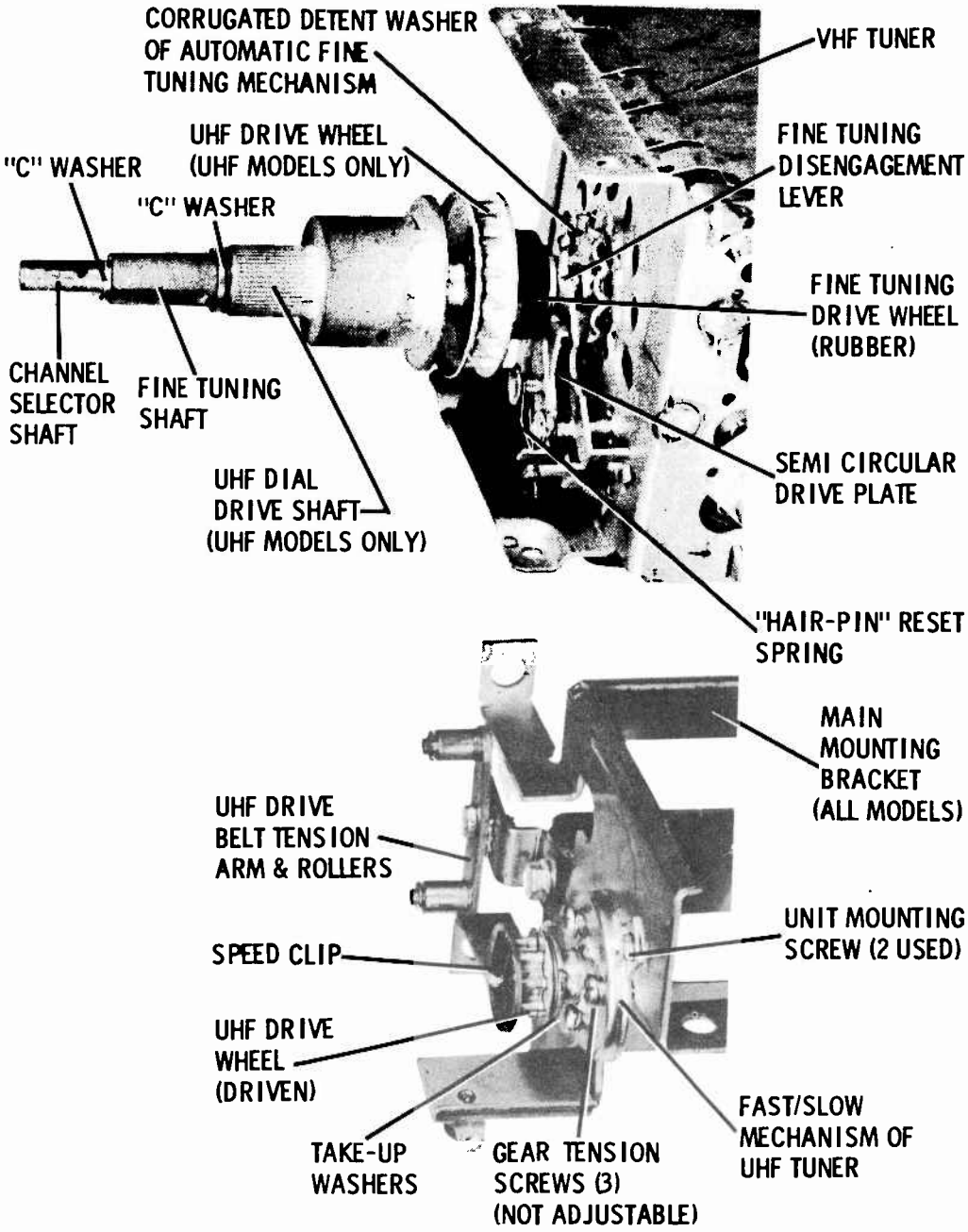

FIGURE 11. FINE TUNING RE-SET AND UHF DRIVE SYSTEM

MOTOROLA Chassis TS-539, Automatic Tuning System, Continued

FINE TUNING MECHANISM

The fine tuner capacitor is driven by means of a rubber drive wheel and semi-circular drive plate. When the tuner is switched from channel to channel, a corrugated, detent washer forces the drive wheel away from the plate, effectively disengaging the drive wheel from the fine tuner. The fine tuning capacitor is then returned to the center of its range by the action of a "hair-pin" spring. This system provides the greatest versatility since it allows complete manual control of fine tuning on every channel for purposes of interference elimination...but retains the desired feature of automatic fine tuning re-set when switching channels. The latter action would be especially important in the case of remote control operation. Of course, the tuner alignment must be correct, on each channel, for satisfactory operation with the fine tuner in its center position. However, with the provision for front panel, individual channel, oscillator screw adjustments, the matter is a simple problem of initial installation procedure.

FINE TUNER ACTION DURING UHF OPERATION

When the receiver is turned to the UHF position (channel #1 position of the VHF tuner), the fine tuner is automatically set to its center position by disengagement of the fine tuner shaft and action of the re-set spring, with the same action as when switching any channel.

UHF TUNING NOT AUTOMATIC

The UHF tuner is a continuous tuning type (as are most conventional UHF tuners) and, therefore, cannot be indexed in any manner. Once the motorized VHF tuner has been switched to the UHF position (channel #1), all UHF tuning must be made manually. During UHF operation, the VHF fine tuner knob becomes the main tuning control for UHF.

When the receiver is located in an area in which there is but one UHF station, the UHF tuning may be made automatic by pre-setting the UHF tuner exactly on the station and then refraining from changing the position of the UHF tuning (fine tuning) knob. Thus, the UHF tuner will remain tuned to the individual station and when the VHF tuner is switched to the UHF position...will automatically be received. This is quite feasible since it should be unnecessary to change the fine tuning setting during normal station reception.

NOTE: Keep in mind that the UHF tuner is never disengaged from the fine tuner shaft and when the fine tuning shaft is rotated, the UHF tuner will re-tuned.

SETTING THE CAM SWITCH FOR AUTOMATIC STATION STOPPING

The indexing wheel, located on the rear of the tuner, is provided with thirteen index cams (twelve channels plus UHF position). The indexing cam can be raised or lowered by the "set" and "cancel" push rods which extend out the rear of the chassis.

The index cams actuate a cam-switch-rider which, in turn, operates the cam-switch. The cam-switch opens the motor circuit, stopping the tuner at the "set" or indexed channels.

The cam-switch is normally in the closed position... when not being contacted by one of the index cams. When an index cam is holding the cam-switch open, the motor circuit is open. The motor must be energized by the front panel station selector pushbutton after stopping on a channel.

The adjustment of the cam-switch-rider against the slanted face of the index cam must be carefully made. If the adjustment is incorrect, single channel operation will result, the tuner will stop out of detent, or the shaft switch will chatter and burn the contacts.

CAM SWITCH ADJUSTMENTS

The cam-switch is attached to the motor mounting bracket by means of three screws (see illustration). Turning the three screws as a unit, moves the cam switch and its rider towards or away from the center axis of the index wheel. Tightening one of the outer screws while loosening the other outer screw, will effectively rotate the cam-switch and cam-switch-rider around the periphery of the index wheel.

PROCEDURE

1. Turn the tuner to a channel number that is "set" for station stopping. Make sure tuner is in the detent position.

2. Adjust the cam switch positioning screws so cam-switch-rider opens the switch near enough to the detent position so that the "homing" effect of the detent will carry the tuner switch into full detent. This will be on the face of the index cam that is turning into the cam-switch-rider. (See illustration for position.)

3. Make certain that the cam-switch position is such that the cam-switch-rider strikes the center of the index cam.. as far as the sides of the cam are concerned.

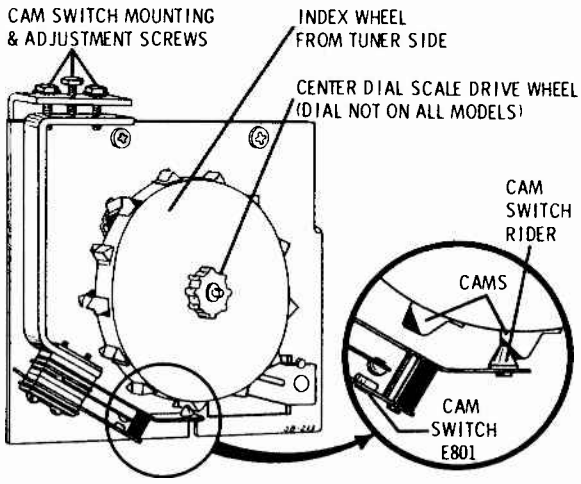

FIGURE 12. CAM SWITCH ADJUSTMENT (part of indexing system)

REPAIR AND REPLACEMENT OF THE AUTOMATIC TUNING SYSTEM

The VHF tuner is mounted to the main chassis, as well as to a bracket which, in turn, mounts to the main chassis. The motor drive unit is independently mounted to the tuner bracket.

The VHF tuner may be individually removed from the main chassis without removing any of the associated mechanism. However, it may be necessary to remove the chassis from the "pan" and the bezel. While it may appear that

MOTOROLA Chassis TS-539, Automatic Tuning System, Continued

the driving motor and VHF tuner are inseparable, this is not the case. The indexing wheel, which is located at the rear of the tuner, is essentially part of the tuner, and is held to the end of the channel selector shaft by means of a screw and expansion of the shaft. Tightening of the screw expands the shaft (shaft is longitudinally split) and secures the index wheel.

The index wheel is not secured to the driving motor: a driving clutch containing four notches (indentations) fits the provided projections of the index wheel for power transmission. When the VHF tuner is removed from the chassis, the index wheel remains with the tuner, while the driving clutch remains with the motor. (See illustration of motor/tuner breakdown, Figure 10).

PROCEDURE TO REMOVE THE VHF TUNER

1. Remove the chassis from the bezel and pan. This involves two brackets (chassis-to-bezel-brace and chassis-to-pan brace) and three bolts (two underneath pan and one at front of tuner near channel selector shaft.

2. If VHF tuner is being replaced...remove all wire connections to the tuner (code wires in some manner, so they may easily be replaced).

3. Remove push-rod retaining bracket (held by screw #11). Remove sponge rubber push-rod support pad and carefully remove push-rods out of slot.

4. Remove the four hex head screws securing VHF tuner to top edge of chassis (screws 1, 2, 3 and 4). Top end of chassis is end having high voltage cage (some of these screws may require the use of a curved or open end wrench. If wrench is not available...loosen chassis from pan and bezel as required).

5. Remove two hex head screws at front end of tuner, holding tuner to bracket (screws 5 and 6). These screws lie in a vertical direction with the heads downward...when the high voltage cage is toward the top.

6. Remove hex head screw from rear of tuner, holding tuner to bracket (screw 7). This screw is located near the antenna input of the tuner.

If the receiver is equipped with a UHF tuner, proceed as follows:

7. Remove the dial cord driving the UHF dial scale.

8. Loosen hex head screw securing tension arm of the toothed drive belt...to relieve tension of drive belt (this screw is located approximately midway between the VHF and UHF tuner shafts).

9. Remove toothed drive belt from UHF tuner shaft wheel (belt will walk off edge of wheel).

10. Remove VHF tuner by carefully moving tuner forward until indexing wheel, at rear of tuner, is out of the cam switch. This must be done carefully so as not to damage the switch or impair its spring action. As tuner is moved forward, the indexing wheel will disengage from the driving clutch. When tuner is clear, remove tuner completely.

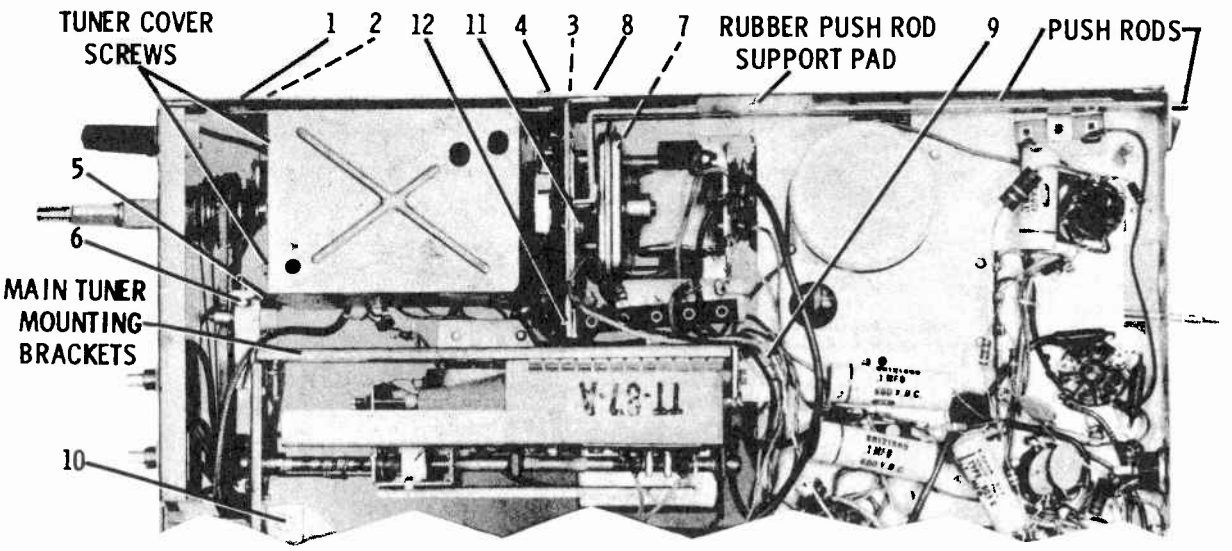

FIGURE 13. PORTION OF CHASSIS SHOWING TUNER MOUNTING

TO REPLACE CENTER (TOP) DIAL SCALE DRIVE BELT
(Center dial scale not on all models)

1. Remove push-rod retaining bracket (held by screw 11). Remove sponge rubber push-rod support pad and carefully remove push-rods out of slot.

2. Remove the four hex head screws securing VHF tuner to top edge of chassis (screws 1, 2, 3 and 4). Top end of chassis is end having high voltage cage.

3. Remove two hex head screws at front end of tuner holding tuner to bracket (screws 5 and 6). These screws lie in a vertical direction with the heads downward.

NOTE: Some screws may require use of a curved wrench. If not available, loosen chassis from pan and bezel when necessary.

4. Remove hex head screw from rear of tuner holding tuner to bracket (screw 7). This screw is located near the antenna input of the tuner.

5. Carefully move VHF tuner forward to the extent that the new drive belt can be looped around the rear indexing wheel (between index wheel and tuner). It should be possible to move the VHF tuner the required amount, even if the required amount, even if the receiver contains a UHF tuner.

6. Pull the toothed belt up and thread around pulleys. Remove "C" washer holding center dial scale, lift dial scale and place drive belt in proper position. Replace center dial and "C" washer.

MOTOROLA Chassis TS-539, Automatic Tuning System, Continued

7. Replace VHF tuner into chassis and secure all screws.

8. Set VHF tuner to a known channel number.

9. Set center dial scale to the corresponding number: may be set by shifting paper scale or position of toothed belt.

TO REPLACE INDEXING WHEEL

1. Loosen VHF tuner by following steps #1 to #4 of the preceding section, "To Replace Center Dial Scale".

2. Shift position of VHF tuner to side of chassis so screw securing indexing wheel to channel selector shaft is visible. Completely remove screw. Indexing wheel will now pull off of the shaft.

3. Replacement index wheel will fit channel selector shaft in two positions... only one of these positions is correct. If the index wheel is replaced in the incorrect position, the dial scale knob will read incorrectly and the cam switch will require severe re-positioning to have the tuner stop in the detent position at all. The correct position of the index wheel may be determined by observing the areas between the cams and around the periphery of the wheel and finding two "notch" marks. The wheel must be replaced on the shaft so that these two notches are on the same side of the shaft as the knob-flat at the front end of the tuner.

TO REPLACE SPRING OR CAMS OF INDEXING WHEEL

It is recommended that the index wheel, spring and cams be replaced as a unit rather than an attempt made at replacing the individual parts. This is due to the fact that any force applied to the spring may distort it to the extent of erratic operation of the indexing wheel when replaced in the tuner. However, the following method of replacing the spring is given to cover the possibility of the parts being available... but not the wheel as a complete unit.

1. After removing indexing wheel as given in steps #1 and #2 of the preceding section "To Replace Indexing Wheel", continue with the following steps.

2. Remove thirteen-arm spring by prying off with a screwdriver. (Spring is staked to drive wheel. File or sandpaper rough spots on index wheel for easy replacement of new spring.)

3. Replace defective or broken cams. (See photo of index wheel.)

4. Place new spring in proper position, and stake to index wheel. (Staking may be done by use of a cold chisel, screwdriver, or indentations made with a nail).

TO REPLACE CAM SWITCH

It is sometimes possible to remove the cam switch and its mounting bracket from the chassis without removing the VHF tuner. This will depend on the model being worked on and the dexterity of the operator. Such removal and replacement is somewhat of a delicate operation since the switch arm may be bent or other parts of the tuner damaged. The safest method would be to free the VHF tuner first.

To remove cam switch without removing tuner

1. Remove the three screws used for securing and adjusting cam switch bracket.

2. Tilt the bracket and switch sideways and carefully remove from chassis.

3. Replace new switch and bracket by inserting in required position and then placing in correct position.

4. Start the three securing and adjusting screws and then adjust the cam switch according to instructions given in appropriate section.

Removal of tuner and cam switch

1. Loosen VHF tuner by following steps 1 through 3 of the section titled, "To Replace Center Dial Scale".

2. Carefully move VHF tuner forward to the extent that the indexing wheel is completely out of the cam switch. It should be possible to move VHF tuner to this extent even if the receiver is equipped for UHF, and has a UHF tuner attached by a dial cord and drive belt.

3. Remove screw holding cam switch bracket to the motor bracket.

4. Replace cam switch. If required, use screws from original unit.

5. Adjust cam switch using instructions given in ADJUSTING THE CAM SWITCH section.

TO REPLACE PUSH ROD RETURN SPRING AND/OR SET AND CANCEL PUSH RODS

The push rod return springs, located between the index wheel and the motor gear box on the parts side of the TV chassis, keep the push rods from hitting into the cams of the index wheel. If these springs are broken or their tension impaired, they must be replaced. These springs are riveted to the bracket located between the indexing wheel and the motor gear box. In some cases, it is possible to drill or punch out the rivet and replace the new spring by means of a nut and bolt. This method needs no explanation. On the other hand, you may prefer to replace the bracket and spring as a unit. The following procedure gives this method.

1. Loosen VHF tuner by following steps 1 through 3 of the section titled "To Replace Center Dial Scale".

2. Carefully move VHF tuner forward to the extent that the indexing wheel is completely out of the cam switch. It should be possible to move VHF tuner to this extent even if the receiver contains a UHF tuner.

3. Remove screw holding retaining bracket for the "set" and "cancel" push rods (screw #1).(This screw is located on the parts side of the chassis, approximately at the center of the motor gear box).

4. REPLACE PUSH RODS IF REQUIRED.

5. Bend bracket holding .25 mfd capacitor, so screw under terminal may be reached. Remove hex screws.

6. Remove hex head screw (#8) located at top of chassis (end of chassis containing high voltage cage), and holding bracket which contains the push rod return spring.

7. Remove hexhead screw holding spring retaining bracket to tuner mounting bracket (screw #12). (This screw is located at the rear of the tuner, near the gear box.) It will be necessary to use a curved wrench for screw removal. If such wrench is not available, it may be necessary to remove remaining screws holding tuner bracket to main chassis, shift entire mechanism out from chassis and then remove the screw.

8. The motor and motor mounting bracket should now be released from the chassis: swing this unit out from the chassis to the extent allowed by the wiring, and remove the four Phillips head screws securing the motor to the motor mounting bracket.

9. Remove the cam switch from the original motor mounting bracket (one mounting screw), and mount the cam switch to the new motor mounting bracket.

10. Re-mount the motor to the new motor mounting bracket using the four Phillips head screws.

11. Re-mount the motor mounting bracket into the chassis.

MOTOROLA Chassis TS-539, Automatic Tuning System, Continued

TO REPLACE MOTOR DRIVING UNIT AND THREE SECTION RELAY

The motor driving unit and the three section relay driven by the motor rotor should be replaced as a single item. This is because the relay section is more or less matched to the motor unit to provide the proper tension to pull the rotor out of the motor field when the power is removed and also to have the proper tension to allow movement of the rotor into the motor when power is applied.

1. Remove the four hex head screws securing the VHF tuner to top edge of chassis (screws 1, 2, 3 and 4). Top end of chassis is end having the high voltage cage.

2. Remove the two hex head screws at front end of tuner holding tuner to bracket (screws 5 and 6). These screws lie in a vertical direction with the heads downward.

3. Remove hex head screw from rear of tuner holding tuner to bracket (screw 7). This screw is located near the antenna input of the tuner.

4. Carefully move the VHF tuner forward to the extent that the indexing wheel is completely out of the cam switch. It should be possible to move the VHF tuner to this extent even if the receiver contains a UHF tuner.

5. Make a drawing of the wire connections from the relay contacts and the motor terminals so they may easily be replaced. Unsolder all wire connections to the relay and motor.

6. Remove the four Phillips head screws securing motor to bracket (work from tuner side of bracket) and remove motor and triple relay as a unit.

7. Replace motor and relay unit into proper position. Replace Philips head screws.

8. Replace wiring.

9. Check operation and make any required adjustments.

REPLACING THE FAST/SLOW UHF TUNING MECHANISM

The UHF fast/slow tuning mechanism is secured to the main bracket mounting the VHF and UHF tuners by means of two hex screws. The mechanism drives the UHF tuner by means of a drift pin in the end of the UHF tuning shaft. Since the slots of the fast/slow mechanism used to engage the pin of the UHF shaft are open, it is possible to remove the fast/slow mechanism without removing the pin from the UHF shaft.

PROCEDURE

1. Remove chassis from cabinet and/or from bezel and pan.

2. Pry off the speed clip holding the UHF drive wheel to the shaft.

3. Carefully force the wheel off the end of the shaft. Allow drive to remain free in chassis. Remove the two drive washers, noting the manner in which they were on the shaft.

4. Remove the two hex screws holding the mechanism to the mounting bracket. (One screw may require the use of a curved wrench or long-nose pliers to remove.)

5. Place new mechanism in position and secure with two hex screws.

6. Pry off speed clip holding UHF drive wheel to shaft, keep the two drive washers on the shaft.

7. Loop toothed drive belt around drive wheel and push wheel back onto shaft.

8. Replace speed clip.

NOTE: If just the drive wheel or drive washers are being replaced, use the appropriate parts of the foregoing procedure.

TO REMOVE AND/OR REPLACE UHF TUNER

After the chassis has been removed from the cabinet and separated from the bezel (holds picture tube) and the bottom "pan", the UHF tuner may be independently removed from the main TV chassis.

PROCEDURE

1. Remove chassis from receiver...refer to chassis removal instructions in SERVICE NOTES. If receiver is equipped with a center dial scale, refer to specific instructions concerning this model.

2. Remove the UHF dial cord.

3. Unsolder the B+ lead (red) at the feed-thru capacitor of the UHF tuner. Unsolder the filament lead (brown) at the feed-thru capacitor of the UHF tuner. Unplug the shielded UHF output cable from the VHF tuner.

4. Remove hex screw at rear end of UHF tuner, holding tuner to main bracket (located between UHF tuner and high voltage cage). This screw will require the use of an open end wrench.

5. Remove hex screw at rear end of UHF tuner, holding tuner to main bracket (located almost directly across from the Service Test Receptacle).

6. Remove hex screw on tube side of tuners, holding UHF tuner to main bracket (this screw is located near the 3900 ohm B+ resistor).

7. Remove the UHF tuner by dropping the tube end out of the bracket and then sliding tuner towards rear of TV chassis until drive shaft pin releases from the fast/slow driving mechanism at the front. Turning the drive shaft so the pin lies in a vertical direction may aid removal. If additional movement is required, the fast/slow mechanism may be loosened from the bracket by the two (2) hex screws.

TO REPLACE UHF TUNER

1. Insert drive pin of shaft into slot of fast/slow mechanism, push tuner forward until tube end clears mounting bracket. Correctly position tuner and replace the three (3) mounting hex screws. Tighten fast/slow mechanism if it has been loosened.

2. Resolder filament and B+ leads and replace shielded output cable.

3. Replace dial cord. Refer to SERVICE NOTES section for illustration of dial cord replacement.

MOTOROLA Chassis TS-539, Automatic Tuning System, Continued

ANALYZING AUTOMATIC TUNER DEFECTS

The automatic tuning system is of such simple and straightforward nature that trouble encountered in the unit can usually be analyzed by examination of the following operational facts:

1. When the tuner-driving motor is not energized, the motor armature is held disengaged from the driving gear box and partially out of the motor field coil by means of three spring arms. When the motor is not energized, it should be possible to easily turn the tuner manually... with no more drag than that of a conventional tuner.

2. The front panel station selector pushbutton is in series with the motor and the 110 volt line and merely initiates station selection of the tuner by energizing the motor.

3. When the motor is energized, the motor armature (rotor) is pulled into the motor field coil and mechanically engaged with the gear box.

4. When the motor armature is pulled into the motor field coil, the triple contacts (which are mechanically attached to the rotor) are pulled into the "closed" position. One of the outer contacts of this section removes the sound: the other outer contact removes the picture tube raster. The center contacts act as a holding relay until the motor circuit is interrupted by action of the cam switch and indexing cams.

5. As the tuner shaft is being turned through the channel positions by the motor, the index wheel attached to the shaft is also turned. The index wheel has thirteen cams arranged around the circumference and located in positions identical to those of the station positions of the tuner. The index cams actuate a switch (cam switch) which is electrically in series with the driving motor. Depending on the pre-setting (indexing) of the cams, each cam can actuate the switch... stopping the tuner at this particular rotational position (station), or mechanically passing by the switch, and corresponding station, without stopping.

AUTOMATIC-TUNER TROUBLE SECTION

NOTE ON SWITCH CONTACTS.....Should the contacts appear pitted or burned so that they will not release, it is possible to file all contacts except the outer sound and picture removal contacts of the shaft switch (E-802). The sound and picture removal contacts are of palladium and must never be filed.

If contacts other than those of the sound and picture removal sections are to be filed... use only a contact file which burnishes rather than removes the conductive plating.

1. NO SOUND AND NO PICTURE (Tuner motor not being energized)

   Defect in contacts of sound and picture removal relay (shaft switch E-802, contacts #1, #2, #5 and #6). Contacts not opening.

   REPAIR... Bend spring arms for correct tension or... if damaged, replace relay section.

2. NO SOUND AND NO PICTURE (Tuner motor runs continuously)

   Armature of motor is not being released from gear box and cannot return to its normal position to break the triple contacts. Check tuner rotation manually with power removed. If tuner is extremely difficult to turn, armature is not releasing. The most likely contacts to be stuck are those of the center section (#3 and #4 of shaft switch E-802) since they carry 110 volts.

   REPAIR... Bend spring arms for correct tension, file points if necessary or... if damaged, replace relay section.

   Check motor armature and shaft for heavy grease deposits - clean with carbon tetrachloride and re-oil.

3. MOTOR STOPS OPERATION WHEN PUSHBUTTON IS RELEASED

   a. Motor holding contacts defective.

   b. Cam switch contacts (E-801) not making contact.

   c. Pushbutton not held closed long enough for cam-switch-rider to move off of the index cam and allow cam switch to close contacts.

   REPAIR... Bend spring arms of #3 and #4 of shaft switch to correct position.

   Check cam switch adjustment.

   Replace cam switch or "holding" contacts if damaged.

   Explain that button must be held in place a sufficient length of time for motor lock action.

4. OPERATION NORMAL EXCEPT SOUND AND/OR PICTURE NOT REMOVED DURING AUTOMATIC TUNING

   Defective contacts of sound and picture removal sections (contacts #1, #2, #5 & #6 of shaft switch).

   REPAIR... Bend spring arms for correct tension or... if damaged, replace relay section.

5. MOTOR INOPERATIVE

   a. Defective front panel channel selector pushbutton switch.

   b. Defective motor (shorted or open field coil).

   c. Defective wiring between pushbutton and motor or between motor and line.

   REPAIR... Check wire connections and motor with continuity meter. Replace defective sections. Check all solder connections for rosin joints or high resistance connections.

6. MOTOR OPERATES WHEN PUSHBUTTON IS PUSHED, BUT DOES NOT TURN TUNER

   a. Motor armature is being held outside of the field coil (movement is restricted).

   b. Driving clutch damaged (broken or disengaged due to tuner or motor becoming loose from chassis).

   c. Gear box damaged (gears stripped).

   REPAIR... Check armature of motor for heavy oil concentrations and dirt.

   Clean motor armature and contacts with carbon tetrachloride.

   Check tension of triple relay and adjust as required.

   Check for damage in clutch and/or gear box by holding motor armature of motor in engaged position... rotate armature or tuner. Replace any damaged parts.

7. CONTINUOUS STATION CHANGING

   a. Cam switch or cam-switch-rider defective.

   b. Cam-switch-rider bent on bracket.

   c. Cam switch bracket screws loose, allowing cam rider to miss cams.

   d. All cams set for station bypassing.

   e. Broken index-wheel-spring allowing cams to fall out of index wheel.

REPAIR...Inspect cam switch and cam-switch-rider, re-adjust.

Replace any defective or broken parts.

8. MOTOR WILL NOT ROTATE TUNER AT ANY TIME (Audible or other indications of motor energization)

a. Defective motor (weak torque, shorted or open field coils).

b. Increased drag of tuner (check by manual rotation for stiffness).

REPAIR...If motor shows signs of being weak, replace motor.

If tuner has increased drag, it may be due to accumulations of grease and dirt. Also, check the possibility of extraneous items and parts having fallen into the tuner.

9. MOTOR WILL OPERATE TUNER AT VARIOUS TIMES, BUT NOT ALWAYS

a. Line voltage dropping below that required for motor starting. This may be during specific times of the day or evening, as the power load increases or decreases, or may be at random times due to erratic loading of the power lines.

b. Weak or defective motor (draws unusually large current, etc.). May be in combination with low line voltage.

c. High resistance solder joints in channel selector switch; between switch and motor or between motor and 110 volt line.

d. Defective channel selector switch contacts.

REPAIR...If line voltage of area is consistently low, suggest step-up transformer or variac to customer.

Clean motor armature and opening to gear box to remove grease and dirt.

Make sure that tuner has minimum drag possible.

Check all wiring connections with soldering iron to make sure of good electrical connection.

10. TUNER DOES NOT ALWAYS STOP AT INDEXED STATIONS (Trouble not localized to one station only)

a. Defective cam switch or cam-switch-rider.

b. Cam-switch-rider loose on cam arm.

c. Cam-switch-rider worn.

d. Screws securing cam switch bracket are loose.

e. Improperly adjusted cam switch.

REPAIR...Inspect cam switch and cam-switch-rider, replace if parts are worn or damaged.

Re-adjust cam switch setting.

11. INTERMITTENT TUNER BYPASSING OF ONE OR MORE INDEXED (DESIRED) CHANNELS

a. Defective cam (may be damaged or have irregular striking face or edges due to metal projections or imperfections in the metal striking edge.

b. Improperly adjusted cam switch.

c. Cam switch or bracket loose.

REPAIR...Inspect cam faces. File or sandpaper any rough or irregular projections. Replace any defective cams.

Tighten cam switch bracket.

Re-set cam switch.

12. TUNER STOPS OUT OF DETENT ON ONE OR MORE STATIONS

a. Improperly adjusted cam switch.

b. Defective cam.

REPAIR...Re-adjust setting of cam switch according to procedure. Replace cam or other parts that are worn or defective.

13. ONE OR MORE CHANNELS CANNOT BE INDEXED INTO TUNER

a. Defective cam at these station positions.

b. Impaired index wheel spring...cam will not retain position.

c. Broken index wheel spring...cam has fallen out of index wheel.

REPAIR...Inspect indexing mechanism at position corresponding to channels. Replace any damaged or worn parts.

Re-adjust cam switch.

Tighten cam switch bracket to eliminate "play".

Tighten index wheel on shaft to eliminate "play".

14. ONE OR MORE CHANNELS CANNOT BE BYPASSED BY TUNER

a. Broken or impaired index wheel spring...cam will not retain "set" position.

b. Cam switch out of line so it missed one "throwing" cam.

c. Index wheel loose.

REPAIR...Replace cams, cam switch, index wheel spring if broken or defective.

15. MOTOR GRABS TUNER AS SOON AS TUNER IS MANUALLY TURNED OUT OF DETENT POSITION

a. Center contacts (#3 and #4 of shaft switch) not opening...but motor is held de-energized while tuner is in detent position by cam switch.

REPAIR...Bend switch arms (#3 and #4 of shaft switch) for correct tension, file points or replace entire unit if worn or damaged.

16. INDEXING OF TUNER CANNOT BE CHANGED

a. Movement of "set" and/or "cancel" push rods being restricted.

Possible trouble: "cancel" push rod may be striking cam wheel spring and preventing full stroke of the "cancel" rod. This may sometimes be relieved by tuning channel selector knob (front panel) very slightly toward the next lower channel and then pushing the "cancel" rod.

REPAIR...Carefully bend push rods so they are closer to cams of index wheel (after removing bezel, chassis and pan from cabinet).

TEMPORARY REPAIR:

Adjust index cams by use of screwdriver, eliminating use of push rods. Repair rods later (chassis, bezel and pan must be removed to use this method).

NOTE: When using above procedure, do not use pressure in a direction that will force cam against index wheel spring. Study action of push rods and apply pressure in a similar manner.

MOTOROLA Chassis TS-539, Circuit Diagram of Tuner and Sound Sections

Wires numbered 1 through 6, connect to correspondingly numbered wires of main schematic printed on the next two pages, over.

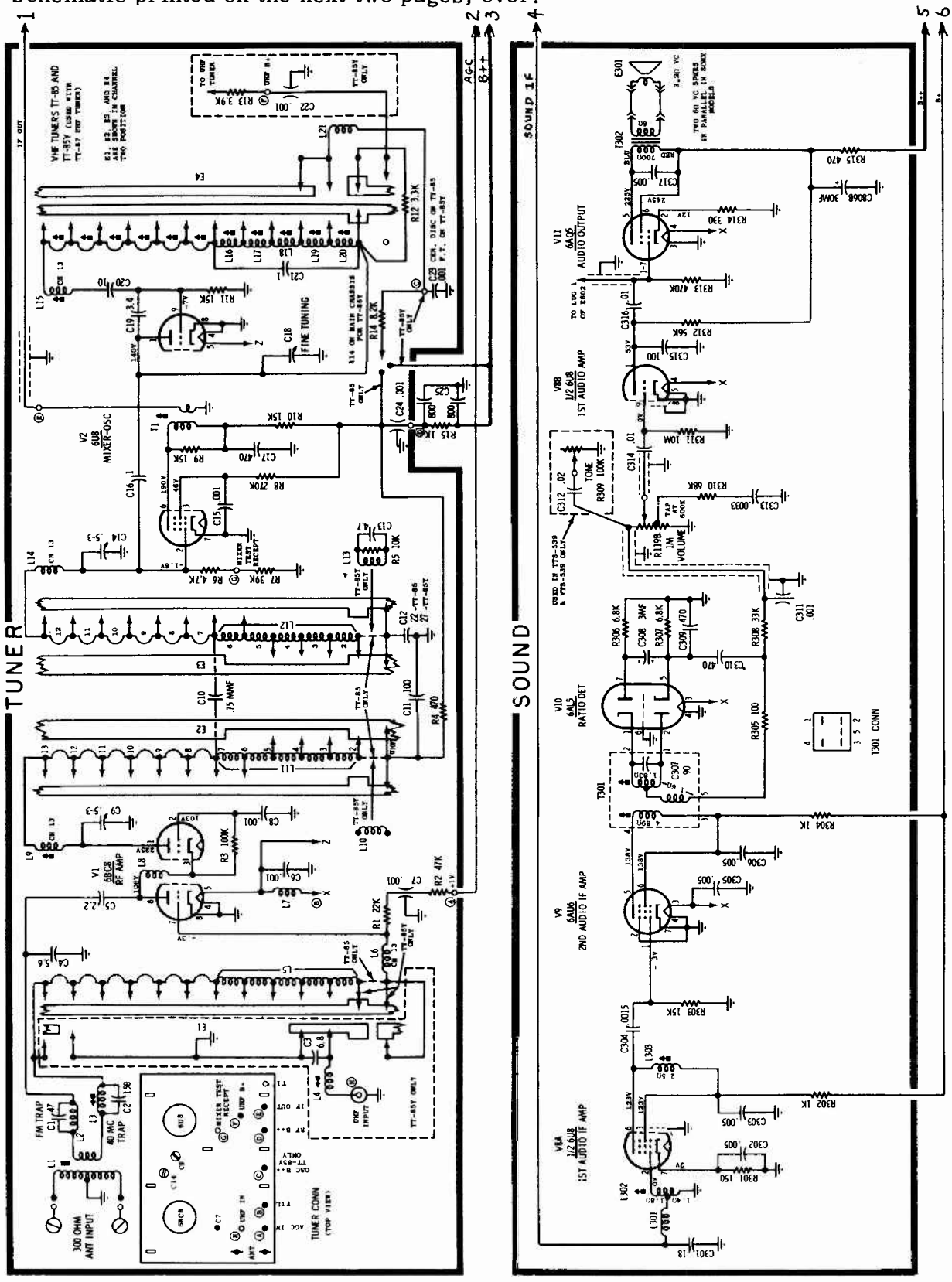

Tuner and Sound sections schematic diagrams are printed on this page, but are an integral part of the complete chassis. The separation is made for printing convenience only. Wires numbered 1 through 6, connect to correspondingly numbered wires of the main schematic diagram on the next two pages, over.

MOTOROLA TELEVISION CHASSIS TS, TTS, VTS & WTS-539A-00

Wires numbered 1 through 6, connect to correspondingly marked wires of the sections printed on the preceding page. This separation is made for printing convenience only.

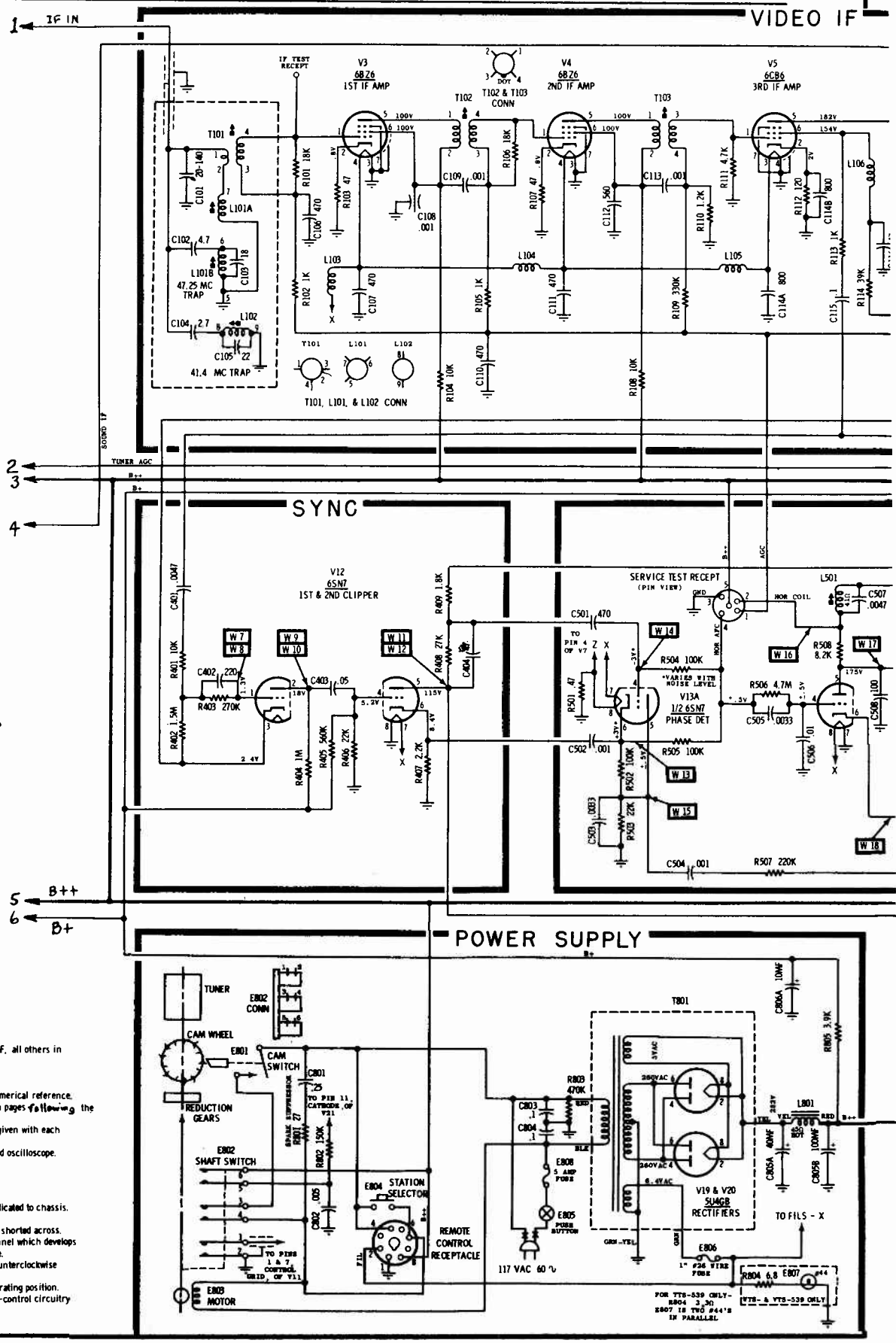

NOTES.

CAPACITORS - Decimal values in MF, all others in MMF unless otherwise specified.

WAVEFORMS
1. Designated by "W" prefix and numerical reference.
2. Photographs of waveforms are on pages following the schematic.
3. Required circuit conditions are given with each waveform.
4. Waveforms observed on wide-band oscilloscope.

VOLTAGE MEASUREMENTS
1. Made with a VTVM from point indicated to chassis.
2. Line voltage - 117 volts.
3. Antenna disconnected and input shorted across.
4. Channel selector switch on channel which develops least noise at detector test receptacle.
5. Contrast control at maximum counterclockwise position.
6. All other controls in normal operating position.
7. Voltages associated with variable-control circuitry will vary with control setting.

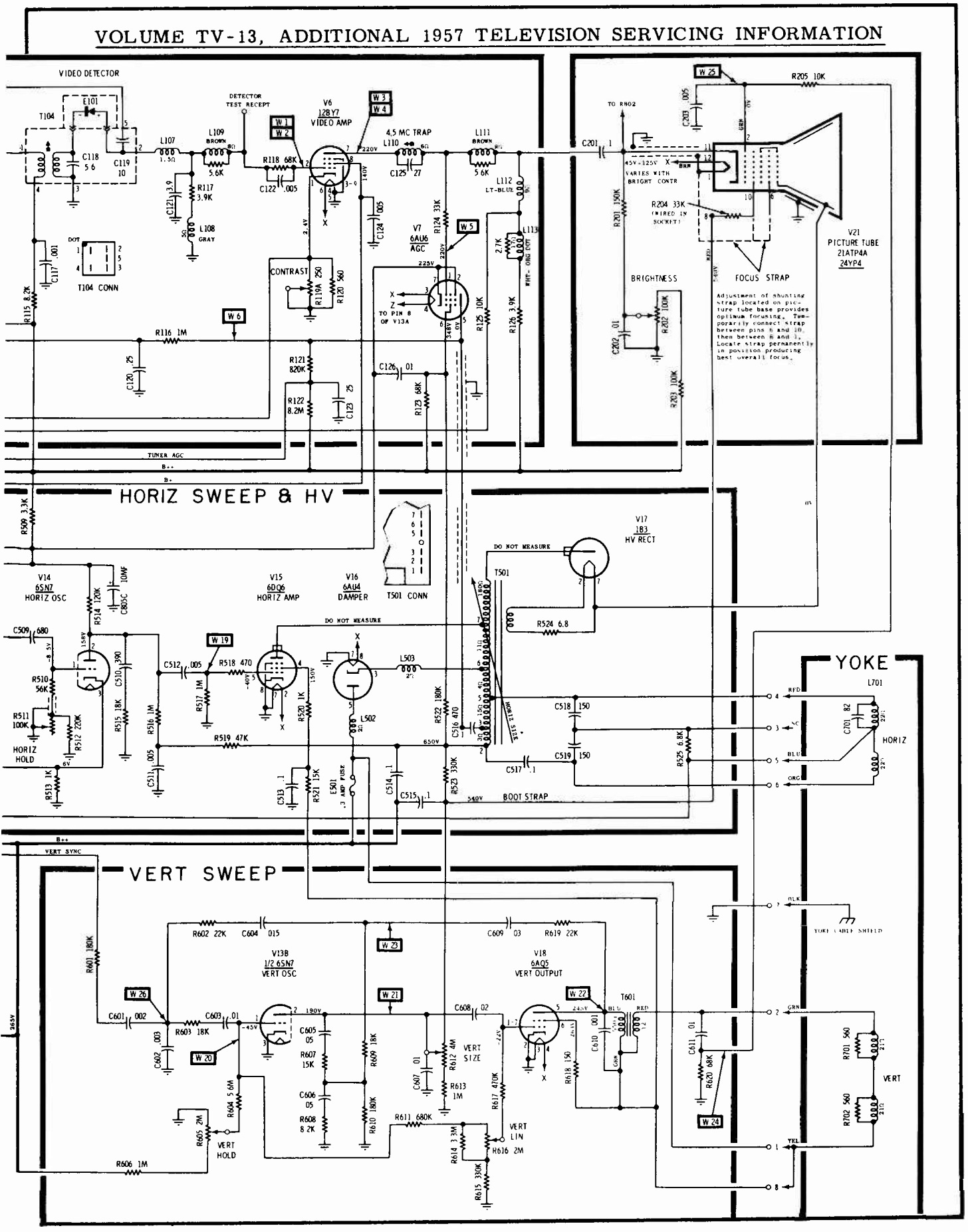
VIDEO DETECTOR
DETECTOR TEST RECEPT
V6 12BY7 VIDEO AMP
4.5 MC TRAP
V7 6AU6 AGC
CONTRAST
BRIGHTNESS
FOCUS STRAP
V21 PICTURE TUBE 21ATP4A 24YP4
TO R802
VARIES WITH BRIGHT CONTR
R204 33K (WIRED IN SOCKET)
T104 CONN
TUNER AGC
HORIZ SWEEP & HV
V14 6SN7 HORIZ OSC
V15 6DQ6 HORIZ AMP
V16 6AU4 DAMPER
T501 CONN
V17 1B3 HV RECT
DO NOT MEASURE
HORIZ SIZE
HORIZ HOLD
BOOT STRAP
YOKE
L701
HORIZ
VERT SWEEP
V13B 1/2 6SN7 VERT OSC
V18 6AQ5 VERT OUTPUT
T601
VERT SIZE
VERT HOLD
VERT LIN
VERT
YOKE CABLE SHIELD

MOTOROLA Chassis TS-539, Service Information (Continued)

PRODUCTION CHANGES

Chassis Coding	Changes
A-00-1	L-110 (4.5 Mc trap) changed to 24B738942. C-125 (27 mmf) changed to 33 mmf.
A-00-2	Same as A-01 changes.
A-00-3	To improve horizontal linearity, reduce overdrive and horizontal size change, the horizontal circuits are changed. See TS-539A-00-3 partial schematic.
A-01	To protect transformer and ON-OFF switch in event of a gassy or shorted 5U4GB tube, 5 amp fuse added between E-805 (ON-OFF switch) and black lead of T-801 (power transformer). E-806 (1" #26 wire) remains in filament fuse circuit.
A-03	To prevent arcing, connections at R-612 (vert size-4 meg) are changed. R-613 (1 meg) moved from left lug to right lug. Bootstrap moved from right lug to left lug. Lugs determined when looking from front of control.
A-04	VOLTAGE RATING INCREASE: voltage rating of C-518 (150 mmf) and C-519 (150 mmf) changed from 2000 to 3000 volts.
A-05	MINIMIZING VERTICAL SIZE AND LINEARITY CIRCUIT CHANGES AFTER WARM-UP: C-602 (.003 mf) changed to .0033 mf; C-609 (.03 mf) changed to .02 mf.
B-01	ELIMINATION OF VOLUME CONTROL NOISE DUE TO DC THRU CONTROL: C-318 (.01 mf) is added. This capacitor is coupled between the inner lead of the shielded cable, terminating at the end lug of the volume control (R-119B) and the junction of C-314 (.001 mf) and R-310 (33K).
B-02	HORIZONTAL OUTPUT CIRCUIT CHANGE: horizontal amplifier screen resistor R-521 (15K) changed to 18K for tube and horizontal HV transformer T-501 protection.

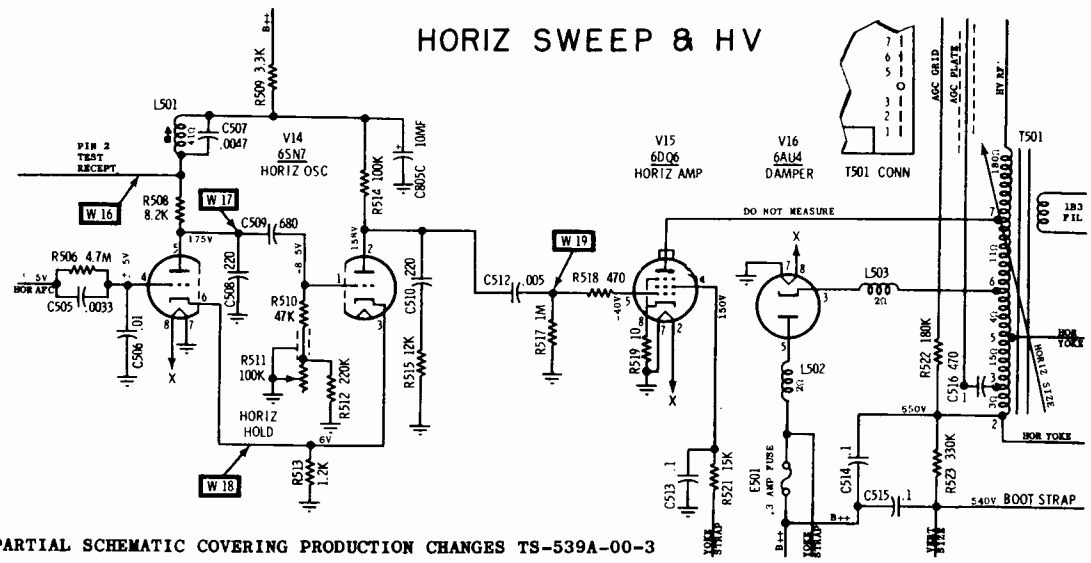

PARTIAL SCHEMATIC COVERING PRODUCTION CHANGES TS-539A-00-3

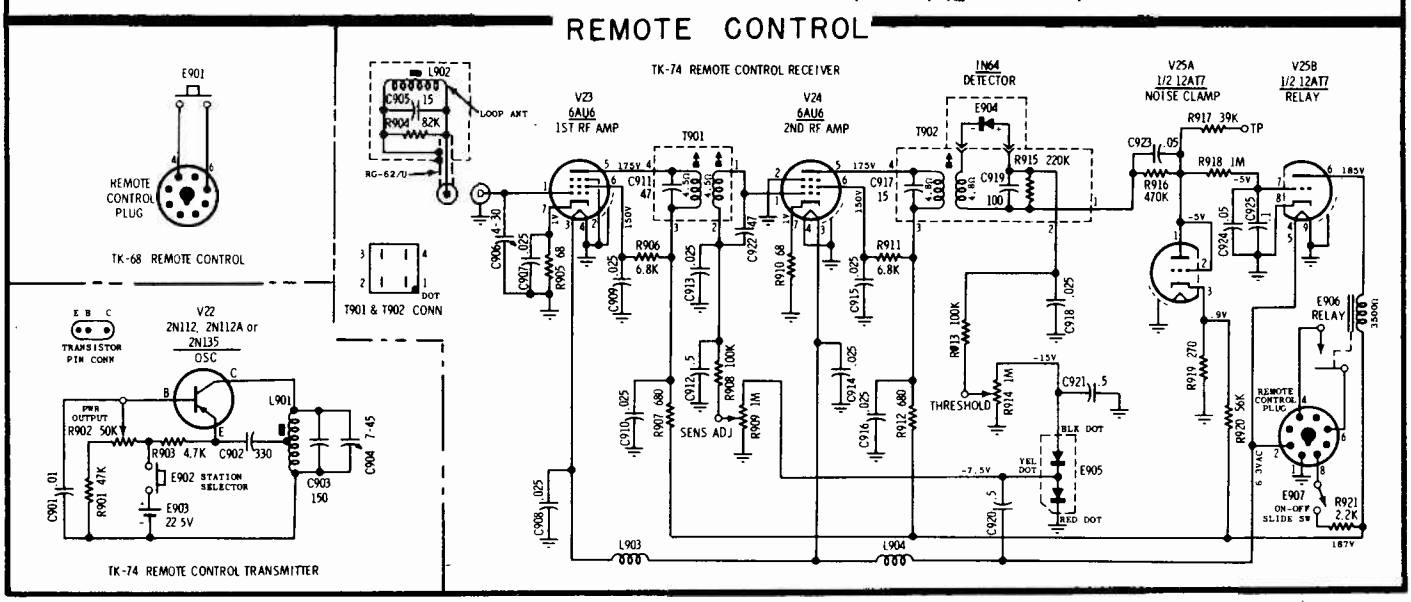

MOTOROLA Chassis TS-539, Waveshape Photographs (Continued)

WAVESHAPES

The following photographs were taken at some of the more important points in the receiver. To facilitate photography, a Tektronix oscilloscope was used. The waveshapes will appear much the same on the average wideband oscilloscope. When a limited bandwidth oscilloscope is used, some interpretation may be necessary to compensate for the waveshape differences (rounding of corners, for example).

The input signal used during photography was a medium-strength television station signal. All receiver controls were set for normal picture viewing.

Note that waveshape amplitudes are based on a 3.3 volt peak-to-peak composite video voltage at the grid of the video amplifier. When analyzing a receiver with these waveshapes, keep in mind that peak-to-peak voltages of many check points will change with different input voltages at the grid of the video amplifier. The voltages of these waveshapes are based on a line voltage of 117 volts and a B++ voltage of 250. Should these voltages differ, in the receiver under test, adjust readings in the required direction (larger or smaller) to compensate. Keep in mind that circuitry containing adjustable controls will give varying readings depending on the control settings.

Variations in composite video signal (actual picture-forming video detail) are due to variations in the type of scene being scanned at the time the photograph was taken.

Vertical gain of the oscilloscope was adjusted so that, regardless of the value of peak-to-peak voltage, all traces would be approximately the same height on the photograph.

W1 Composite video signal, grid of video amplifier (pin 2, V-6). 3.3 volts PP (Oscilloscope synced near vertical rate)

W2 Composite video signal, grid of video amplifier (pin 2, V-6). 3.3 volts PP (Oscilloscope synced near horizontal rate)

W3 Composite video signal, plate of video amplifier (pin 7, V-6). 85 volts PP (Oscilloscope synced near vertical rate)

W4 Composite video signal, plate of video amplifier (pin 7, V-6). 85 volts PP (Oscilloscope synced near horizontal rate)

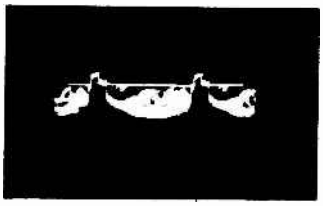

W5 Composite video signal, grid of AGC tube (pin 1. V-7). 85 volts PP (Oscilloscope synced near horizontal rate)

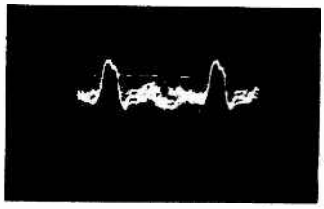

MOTOROLA Chassis TS-539, Waveshape Photographs, Continued

W6 Keying pulse, plate of AGC tube (pin 5, V-7). 450 volts PP (Oscilloscope synced near horizontal rate)

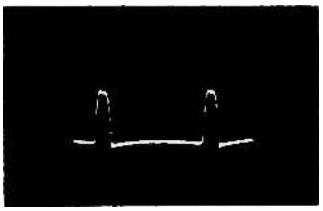

W7 Composite video signal, grid of 1st sync clipper (pin 1, V-12). 45 volts PP (Oscilloscope synced near vertical rate)

W8 Composite video signal, grid of 1st sync clipper (pin 1, V-12). 45 volts PP (Oscilloscope synced near horizontal rate)

W9 Vertical sync pulse, plate of 1st sync clipper (pin 2, V-12). 30 volts PP (Oscilloscope synced near vertical rate)

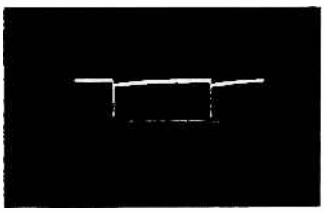

W10 Horizontal sync pulse, plate of 1st sync clipper (pin 2, V-12). 30 volts PP (Oscilloscope synced near horizontal rate)

W11 Vertical sync pulse, plate of 2nd sync clipper (pin 5, V-12). 150 volts PP. Includes feedback from vertical oscillator. (Oscilloscope synced near vertical rate)

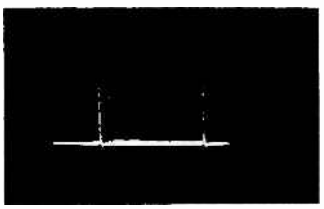

W12 Horizontal sync pulse, plate of 2nd clipper (pin 5, V-12). 120 volts PP (Oscilloscope synced near horizontal rate)

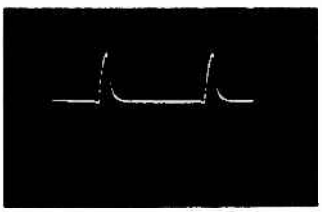

MOTOROLA Chassis TS-539, Waveshape Photographs, Continued

W13 Horizontal sync pulse, cathode of phase detector (pin 6, V-13A). 10.5 volts PP (Oscilloscope synced near horizontal rate)

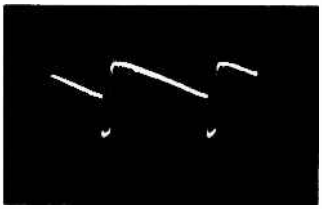

W14 Horizontal sync pulse, grid of phase detector (pin 4, V-13A). 6.8 volts PP (Oscilloscope synced near horizontal rate)

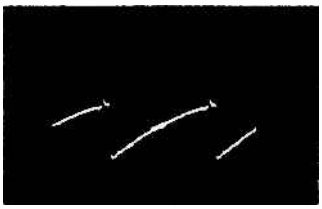

W15 Horizontal sawtooth, plate of phase detector (pin 5, V-13A). 11 volts PP (Oscilloscope synced near horizontal rate)

W16 Waveform produced by the horizontal oscillator coil L-501. May be taken at pin 2 of the service test receptacle. 27 volts PP (Oscilloscope synced near horizontal rate)

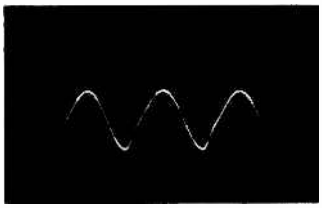

W17 Combination of horizontal oscillator plate and coil voltage, plate of horizontal oscillator (pin 5, V-14). 40 volts PP (Oscilloscope synced near horizontal rate)

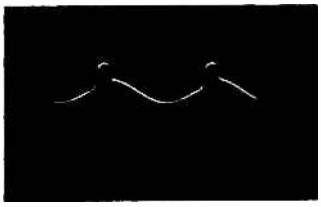

W18 Feedback pulse created during retrace of horizontal oscillator. Taken at cathodes of horizontal oscillator (pin 3 or 6, V-14). 9 volts PP (Oscilloscope synced near horizontal rate)

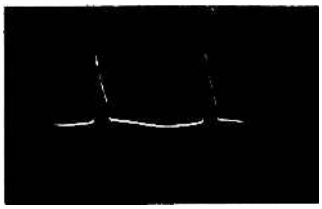

W19 Waveform driving grid of horizontal output tube (pin 5, V-15). 175 volts PP (Oscilloscope synced near horizontal rate)

MOTOROLA Chassis TS-539, Waveshape Photographs, Continued

W20 Waveform at grid of 1st section of vertical oscillator (pin 1, V-13B). 110 volts PP (Oscilloscope synced near vertical rate)

W21 Waveform at plate of vertical oscillator (pin 2, V-13B). 140 volts PP (Oscilloscope synced near vertical rate)

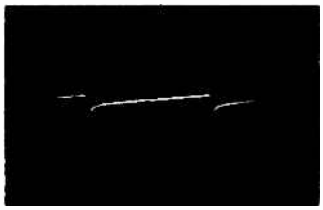

W22 Waveform at plate of vertical output (pin 5, V18). 1320 volts PP. DO NOT TAKE WITH ORDINARY EQUIPMENT (Oscilloscope synced near vertical rate)

W23 Waveform at the junction of C-604 (.015), C-609 (.03) and R-609 (18K) of vertical oscillator feedback network. 280 volts PP. (Oscilloscope synced near vertical rate)

W24 Vertical blanking pulse from vertical output transformer--at junction of R-205 (10K), C-611 (.01) & R-620 (68K). 150 volts PP (this voltage includes the horizontal pulses riding on the peaks. (Oscilloscope synced near vertical rate)

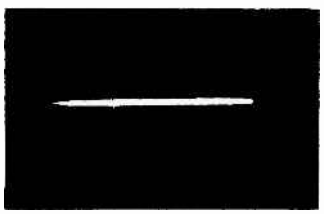

W25 Vertical blanking pulse at grid of the picture tube (pin 2, V-20). 65 volts PP. (Oscilloscope synced near vertical rate)

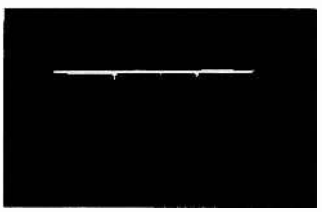

W26 Waveform of vertical integrator (junction of C-601 (.002), C-602 (.003), R-602 (22K) and R-603 (18K). 210 volts PP. (Oscilloscope synced near vertical rate).

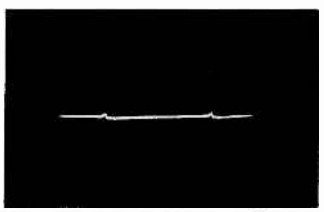

Muntz TV Inc.

MODEL NO.				
	724 TS	724 TS/82	724 TM	724 TM/82
	724 TB	724 TB/82	724 TMX	724 TMX/82
	724 CM	724 CM/82	724 CW	724 CW/82
	724 CB	724 CB/82	724 CMD	724 CMD/82
	724 CBD	724 CBD/82	724 CMP	
	724 CMP/82	724 CBP	724 CBP/82	

(Continued below and on the next three pages.)

PICTURE TUBE ADJUSTMENTS

Depending on the type of picture tube used in your particular set the focus adjustments and centering adjustments are as follows:

ELECTROSTATIC FOCUS C.R.T.

A connecting wire is provided at the base of the CRT to obtain best focus and line detail. Alternate positions of this wire are shown on the schematic.

CENTERING

Two beam adjuster rings are provided on the yoke cover for centering purposes. Rotate the rings individually until the picture is properly centered.

DEFLECTION YOKE T2

If picture tilt exists, temporarily loosen the wing screw on the yoke and rotate the yoke until tilt is eliminated. Be sure that the yoke is seated as far forward on the neck of the CRT as possible before securing.

ION TRAP

The proper setting of the Ion Trap is of great importance and should be made AFTER all centering and focus changes. Set the brilliance control to maximum and adjust Ion Trap on the neck of the CRT for maximum screen brilliance. CAUTION: Two points of brilliance may be obtained in some tubes. The proper setting is at the maximum point of brilliance closest to the base of CRT.

OPERATION OF SERVICE CONTROLS

HORIZONTAL HOLD R-72. The Horizontal hold control is an adjustment to lock and hold the picture in horizontal synchronization. The picture should stay in sync. over 50% of the range of this control.
VERTICAL HOLD R-71. The Vertical hold control is designed to hold the picture in vertical synchronization with proper interlace of the sweep lines.
VERTICAL SIZE R-39. The Vertical Size control affects the height of the picture without disturbing the Vertical Linearity setting.
VERTICAL LINEARITY R-30. The Vertical Linearity control affects the very top portion of the picture.
BRILLIANCE R-27. The Brilliance Control adjusts the over-all brightness of the picture.
CONTRAST R-26. The Contrast Control adjusts the degree of black and grey shading of the picture to individual preference.

Models of the 727 Series are similar to the 724 Series covered below and on the next three pages. Circuitry differences are explained on the next page, over, in connection with the circuit diagram.

INDIVIDUAL CHANNEL ADJUSTMENT USING A T.V. SIGNAL

ADJUSTING THE STANDARD COIL

PR-0253, PR-0263.

The tuning slugs may be reached by removing the Channel selector knob. Set the fine tuning to the center of its range. (On the PR 0263 (VHF) the flat of the shaft parallel with the chassis. On the PR 0253 (UHF/VHF) mid point between the stops.) Adjust each individual channel for best compromise of picture and sound.

ADJUSTING THE SARKES

PR-0254, 0264, 0268.

Tuning slugs are located: (On the PR-0264 and PR-0268 VHF the flat on the gear wheel must be perpendicular). On the PR-0254 UHF/VHF the knob slot of the center shaft parallel with the chassis. Turn the channel selector to the highest channel of channels 7 to 13 operating in your locality. Adjust high band oscillator for best association of sound and picture. Re-set channel selector for highest operating band channel (2 to 6) and adjust low band oscillator for best association of sound and picture.
NOTE: The UHF sections of both tuners are prealigned by the factory and have extremely critical settings and wire dress. Tampering with UHF sections is not recommended.

ALIGNMENT OF HORIZONTAL OSCILLATOR

Tune in a good signal and allow the receiver to warm up for a few minutes. Then follow the procedures listed.

1. Tune in the receiver properly and adjust the picture below an over-contrast condition.
2. Short out Ringing Coil (L17) with a jumper direct-across the coil.
3. Short out the AFC diodes with a jumper from test point G to ground.
4. After receiver is warmed up, adjust Horizontal Hold Control for a single picture.
5. Remove short from Ringing Coil and adjust Ringing Coil with the core entering the coil from the chassis side until a single picture is attained. Then back off approximately a ¼ of a turn counterclockwise for final adjustment of this coil.
6. Remove short from diodes, and the picture will snap into sync.
7. Set Horizontal Hold Control to maximum clockwise and turn slowly counterclockwise until picture is in sync. This is the proper setting of the Horizontal Hold Control and will maintain sync for any signal level.
8. Read the voltage at point G to chassis ground; it should be +1 to +2 volts if the selumium rectifiers are OK and the rest of the circuit is good.

Muntz TV Inc.

MODEL NO.				
	724 TS	724 TS/82	724 TM	724 TM/82
	724 TB	724 TB/82	724 TMX	724 TMX/82
	724 CM	724 CM/82	724 CW	724 CW/82
	724 CB	724 CB/82	724 CMD	724 CMD/82
	724 CBD	724 CBD/82	724 CMP	
	724 CMP/82	724 CBP	724 CBP/82	

Models of the 727 series differ from the revised 724 circuitry in using another filter section after L21-C29B This consists of 100 ohm resistor and 120 mfd. capacitor. Some of the B+ points of the schematic are connected through the new filter; a few others are shifted to +145 from +150. Additional changes are: R61 from 22K to 27K, added .001 mfd. 500 v. condenser from center terminal R27 brilliance control to ground, also added from junction of R67 and rectifier a 0.1 mfd. 600 v. condenser to ground.

Revisions after Serial #183488

Sound trap L14-C23 omitted.
18 ohm resistor used in place of L20.
C45, C58 changed from 0.47 to 0.22.
L11 omitted, path completed direct.
18K resistor across L9, new value.
R19 changed from 680K to 470K ohms.
R4, across L3, omitted. R3 changed to 8.2K ohms. The wiring from R3 to grid 7 of V3, instead of to junction of C2-L2 as shown in diagram.

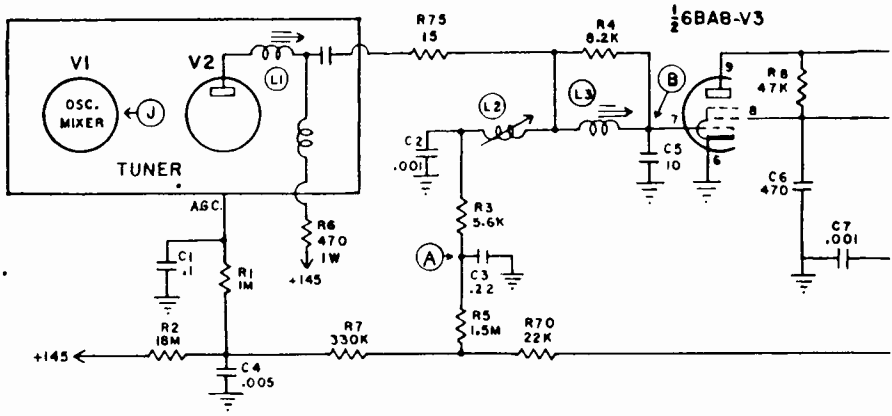

Production Changes

R13, R14, from 470K to 180K ohms.
C15 from .003 to .005 mfd. ±20%.
C43 from 680 mmfd. to 470 mmfd.
C33 from .002 to .0033 mfd. capacitor.
The last two changes were made on all models except TS Series.
R19 from 680K to 470K ohms.
R20 from 470K to 330K ohms.

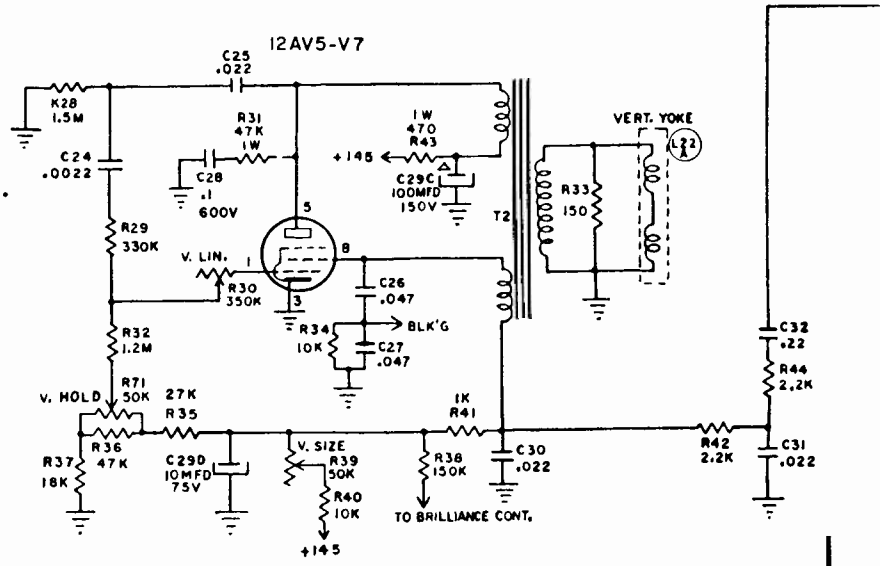

B+ = +150. AGC = −6.
G = GROUND H = HEATER
TP = TIE POINT
LINE VOLTAGE 118 A C
V-VTVM USED TO TAKE READINGS
CONTRAST AND BRILLIANCE AT CLOCKWISE
*BRILLIANCE AT COUNTER-CLOCKWISE

Symbol	Function	PIN 1	PIN 2	PIN 3	PIN 4	PIN 5	PIN 6	PIN 7	PIN 8	PIN 9
V3	1st I.F. Hor. Disch. 6BA8	+5.	−7.5	+102.	H 35.AC	H 29.AC	G 0.	−5.	+144.	+143.
V4	2nd I.F. Hor. Osc. 6BA8	+5.	+1.	+116.	H 35.AC	H 41.AC	+2.4	0	+144.	+143.
V5	Video Amp. Sync. Sep. 6BH8	G 0	−15.	+102.	H 53.AC	H 47.AC	+.16	−1.5	+98.	+124.
V6	Sound I.F. Audio Amp. 6AW8	G 0	−1.	+130.	H 41.AC	H 47.AC	G 0	−2.4	+144.	+143.
V7	Vert. Osc. Vert. Out. 12AV5	−4.	H 5.5AC	G 0	TP +18.	+127.	TP +145.	H 17.5AC	+43.	
V8	Hor. Out. 25DN6	TP +145.	H 53.AC	G 0	TP +104.	−20.	TP −2.4	H 78.AC	+118.	
V9	Damper 19AU4GT			+445.		+144.		H 97.AC	H 78.AC	
V10	H.V. Rect. 1B3						* +14.5K			
CRT	PICTURE 24DP4A					PIN 10 +265		PIN 11 +30		PIN 12 5.5AC

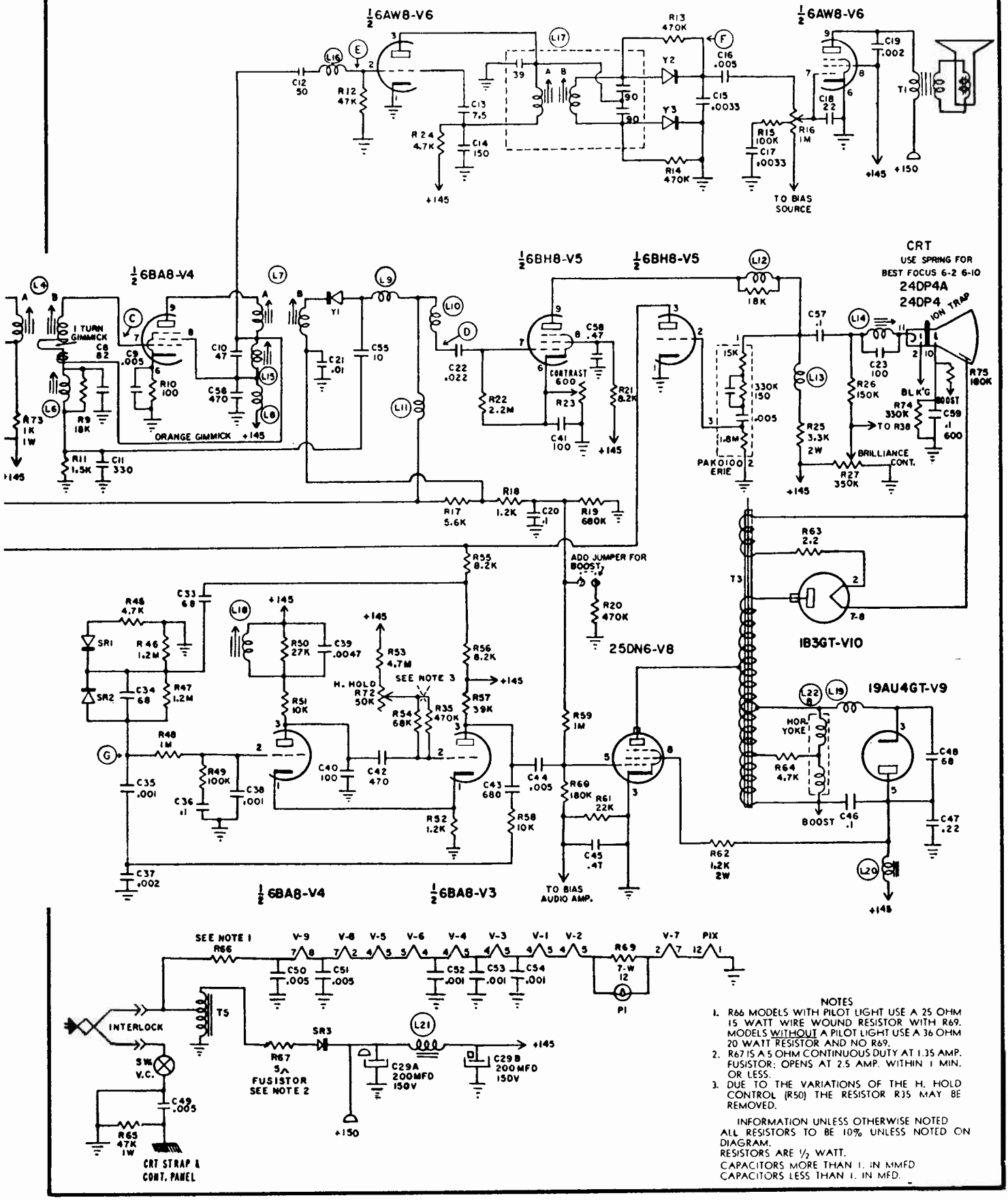

NOTES

1. R66 MODELS WITH PILOT LIGHT USE A 25 OHM 15 WATT WIRE WOUND RESISTOR WITH R69. MODELS WITHOUT A PILOT LIGHT USE A 36 OHM 20 WATT RESISTOR AND NO R69.
2. R67 IS A 5 OHM CONTINUOUS DUTY AT 1.35 AMP. FUSISTOR; OPENS AT 2.5 AMP. WITHIN 1 MIN. OR LESS.
3. DUE TO THE VARIATIONS OF THE H. HOLD CONTROL (R50) THE RESISTOR R35 MAY BE REMOVED.

INFORMATION UNLESS OTHERWISE NOTED
ALL RESISTORS TO BE 10% UNLESS NOTED ON DIAGRAM.
RESISTORS ARE ½ WATT.
CAPACITORS MORE THAN 1. IN MMFD
CAPACITORS LESS THAN 1. IN MFD.

MUNTZ TV 724 and 727 Series

Alignment Instructions

The letters A and B after the coil numbers designate the position of the coils on the coil forms in relation to the chassis. Coil A is closest to the chassis and Coil B is the furthest from the chassis.

Before alignment it is recommended that the following lead dress be made.

1. Adjust the one turn link on the interstage coil (L4B) tightly around the coil form midway between the two coils.
2. Dress the orange gimmick wire on the sound grid coil (L6) flat against the video detector shield.
3. Dress the green wire on L4B as close to the chassis as possible and away from the orange gimmick.

VIDEO I.F. ALIGNMENT

Step No.	*Sweep Generator Coupling*	*Sweep Generator Frequency*	*Marker Generator Frequency*	*Channel*	*Scope Connection*	*Adj.*	*Remarks*
1.	To green grid lead on coil form L4B. Test point "C."	44 MC (10 MC Sweep)	41.25 42.5 43.0 44.75 45.75 47.25	Any noise-free channel on VHF.	Through a 15K resistor in series with the hot lead of scope to test point "D."		Apply negative 5.5 volt Bias (See Service Notes) to junction of 5.6K resistor and white wire on the high A.G.C. buss. Test point "A."
2.	Same	Same	Same	Same	Same	L7A	Per figure peaking at approximately 44.25 M.C.
3.	Same					L7B	Per figure 4 peaking at approximately 44.25 M.C.
4.	Grid pin 7 of V 3 Test point "B."					L4A	Per figure 3 peaking at approximately 44.25 M.C.
5.	Same					L4B	Per figure 5.
6.	High side through an ungrounded tube shield floating over Osc.-mixer tube.					L3	Per figure 5 peaking at approximately 44.5 M.C.
						L1	For maximum gain consistent with wave form per Figure 6. To control the steepness of the low frequency side of the curve, spread or squeeze common coupler L2. Readjust L3 to maintain wave form per Fig. 6.

SOUND ALIGNMENT PROCEDURE

(Without Equipment)

To align Sound Coils with a PROPERLY TUNED local operating channel, use the following procedure.

Step No.	*Signal*	*Adjustment*	*Remarks*
1.	Weak	L6, L14 and L17A for maximum sound and minimum hiss.	Maintain a weak signal by loosely coupling the antenna to the receiver.
2.	Strong	L17B for maximum sound.	
3.	Repeat Step 1 for optimum performance and elimination of buzz and distortion.		

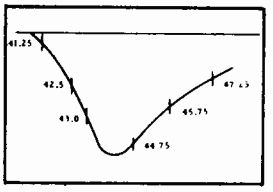

FIG. 3

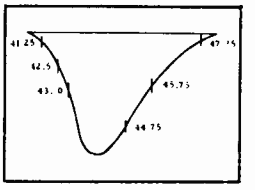

FIG. 5

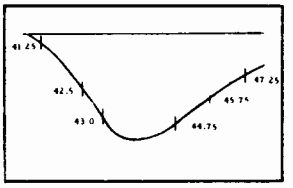

FIG. 4

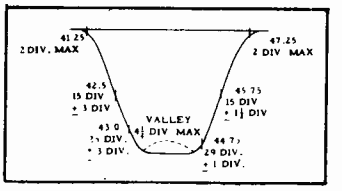

FIG. 6

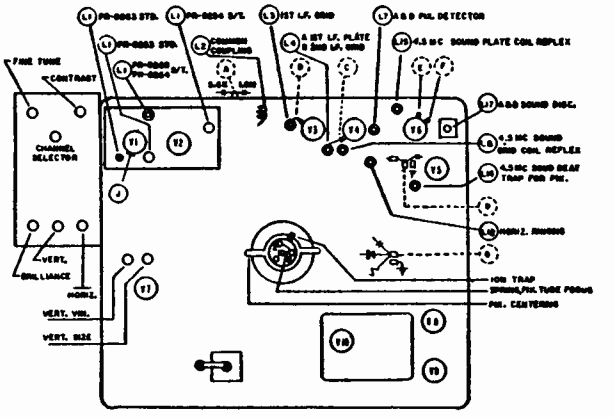

OLYMPIC RADIO & TELEVISION INC.

MODELS	DB CHASSIS	DF CHASSIS	DAU CHASSIS	DBU CHASSIS	DFU CHASSIS
	1TB61	4CF75	1TA60/U	1TB61/U	4CF75/U
	1CB71	4CF76	1CA70/U	1CB71/U	4CF76/U
DA CHASSIS	1CB72	4KF84	1KA80/U	1CB72/U	4KF84/U
1TA60	1CB77			1CB77/U	
1CA70	1KB87			1KB87/U	
1KA80	1KB88			1KB88/U	

The VHF models are 15-tube and the VHF/UHF models are 16-tube direct viewing television receivers which differ only in type of cabinet, size of speaker and use in conjunction with a radio receiver and automatic record changer in the combination models. A 21" electrostatically focused rectangular tube 21ALP4(A) is used in the DA, DB, DAU and DBU chassis and a 24" magnetic focused rectangular tube (24CP4A) is used in the DF and DFU chassis. Replacement in all cases must be of the identical size and type.

CENTERING AND FOCUSING ADJUSTMENTS

DA, DB, DAU and DBU Chassis

The centering magnets are mounted on a pressure board which holds the deflection yoke in place. (See Figure 3.) Each ring has a small tab and adjustment is accomplished by rotating these tabs.

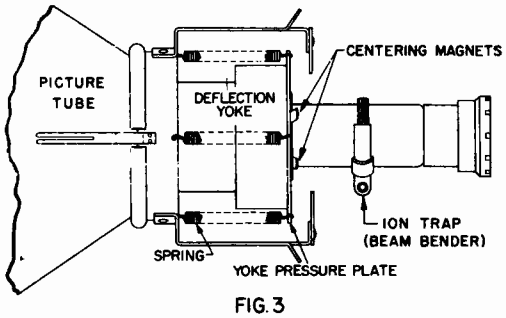

FIG. 3

DF and DFU Chassis

The 24" receivers are magnetically focused and centering is accomplished by adjusting an arm which extends vertically from the front of the focus magnet. (See Figure 4.) This arm may be rotated for a limited distance around the neck of the tube and may also be moved up and down.

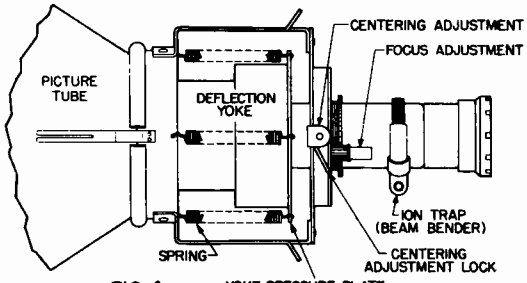

FIG. 4

ADJUSTMENT OF HORIZONTAL OSCILLATOR

(1) Allow set to warm up to operating temperature.

(2) Select station operating normally.

(3) Short out terminals C and D of horizontal phasing coil L17.

ADJUST FOR EQUAL PEAKS

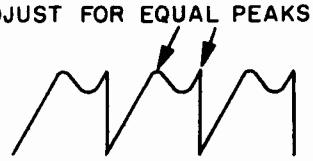

FIG. 5

(4) Set Horizontal Hold Control at maximum clockwise rotation.

(5) Adjust the horizontal frequency screw of L16 until picture falls into sync. Turning the screw clockwise lowers the frequency (bars sloping downward to left) and turning the screw counterclockwise increases frequency (bars sloping downward to right).

(6) Connect vertical input lead of oscilloscope with a 5 uuf isolating condenser in series to terminal C of the horizontal oscillator transformer and ground oscilloscope to chassis. Set frequency of scope to approximately 5 kc.

(7) Remove short from terminals of the horizontal phasing coil (L17) and adjust screw of L17 until wave shape appearing on scope is like that shown in Figure 5.

(8) Some further adjustment of L16 Horizontal Frequency may be necessary to keep picture in sync after adjusting L17 for proper wave shape.

(9) Remove scope from terminal C and retouch L16, if necessary. (Refer to step 10.)

(10) Turn the Horizontal Hold Control through its entire range. Evidence of sync fall out or a tendency to fall out should be noted at both ends. If this condition cannot be achieved, retouch L16.

Caution: It is important that the picture be centered in the mask properly with the Horizontal Hold Control in the mid-position; otherwise, the set user may attempt to center the picture by means of the hold control, which may then be on "edge" and impulse noise or change of camera will cause the picture to fall out of synchronization. Excessive drift of the horizontal oscillator circuit may be caused by a weak or defective 6SN7/GT tube.

(Schematic diagram on pages 140-141; alignment information on page 142.)

OLYMPIC TELEVISION RECEIVERS, CHASSIS TYPES DA, DB, DF (VHF) AND DAU, DBU, DFU (VHF/UHF)

TUBE AND TRIMMER LAYOUT

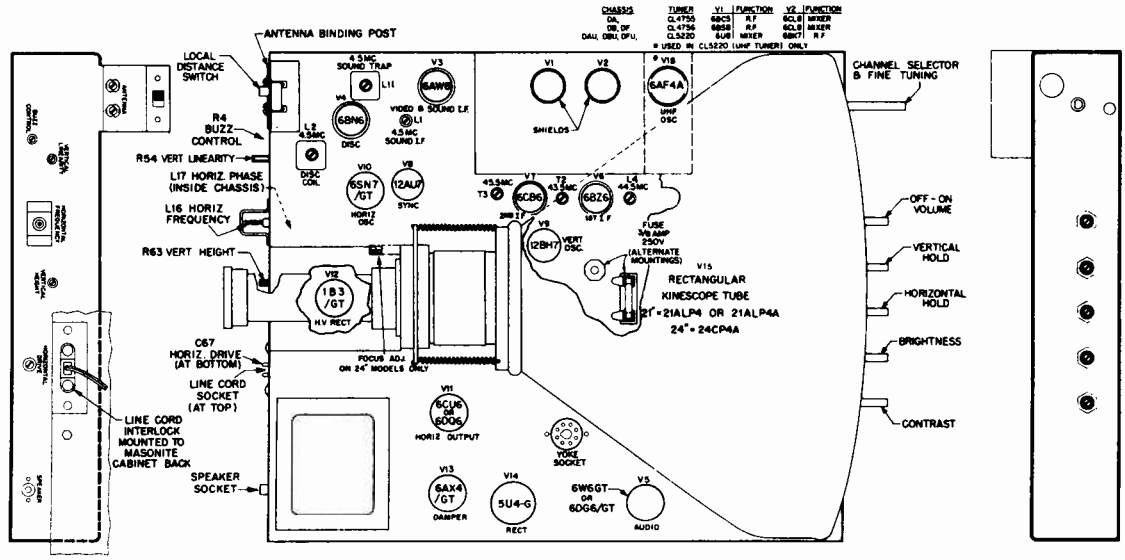

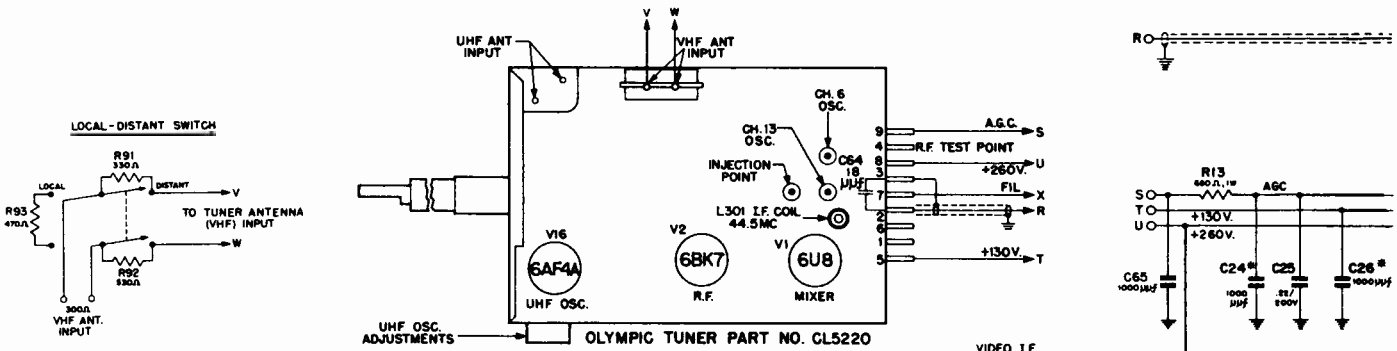

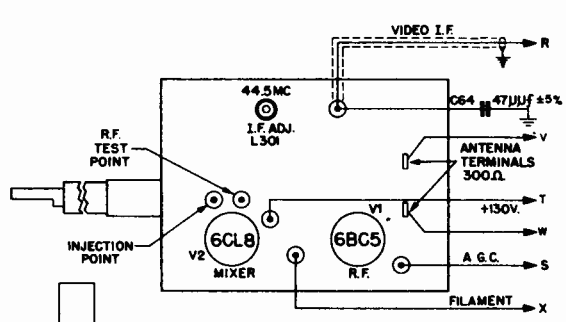

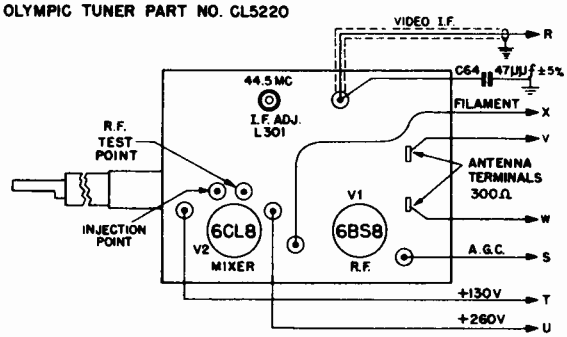

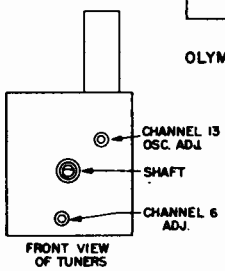

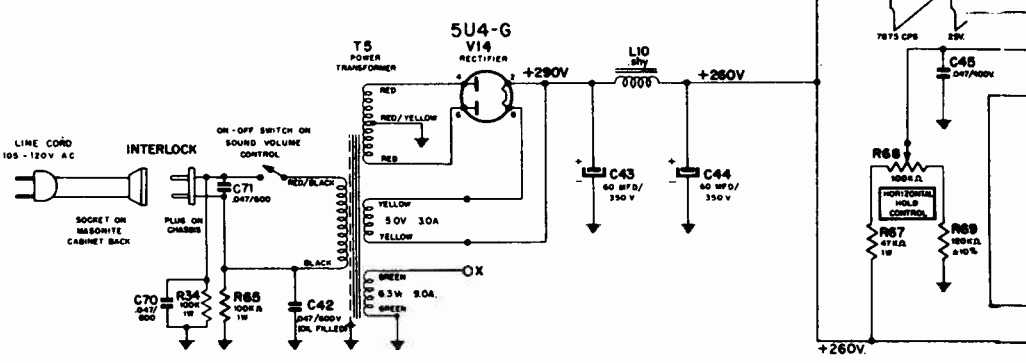

NOTES:

1. ALL RESISTORS ±20% TOLERANCE, 1/2 WATT UNLESS OTHERWISE SPECIFIED.
2. ALL MICA AND CERAMIC CONDENSERS ±20% TOLERANCE, UNLESS OTHERWISE SPECIFIED.
3. ALL VOLTAGES MEASURED BETWEEN POINTS INDICATED AND CHASSIS, USING AN ELECTRONIC VOLTMETER ALL VOLTAGE READINGS ± 10%, MEASURED WITH AN INPUT VOLTAGE OF 117 VOLTS, 60 CYCLES, A.C. WITH INCOMING SIGNAL AND WITH CONTRAST CONTROL SET TO PRODUCE 50 VOLTS PEAK TO PEAK AT KINESCOPE
- ◎ 4. CERAMIC CONDENSERS, DISC TYPE.
- ◎ ◎ 5. USED ONLY AS REQUIRED FOR PROPER ALIGNMENT

ION TRAP MAGNET ADJUSTMENT

Turn the Brightness Control fully clockwise and the Contrast (picture) Control fully counterclockwise. Adjust the ion trap magnet by moving it forward or backward and at the same time rotating it slightly around the neck of the kinescope until the raster on the screen is at its brightest. Use the brightest position nearest the tube base. Reduce the Brightness Control setting until the raster is slightly above average brilliance.

DEFLECTION YOKE ADJUSTMENT

If the lines of the raster are not horizontal, pull back on spring board and rotate the deflection yoke until condition is corrected. The spring board will then hold the yoke in place. If neck shadow is evident or the corners of the raster are dark, the deflection yoke must be moved forward as far as possible.

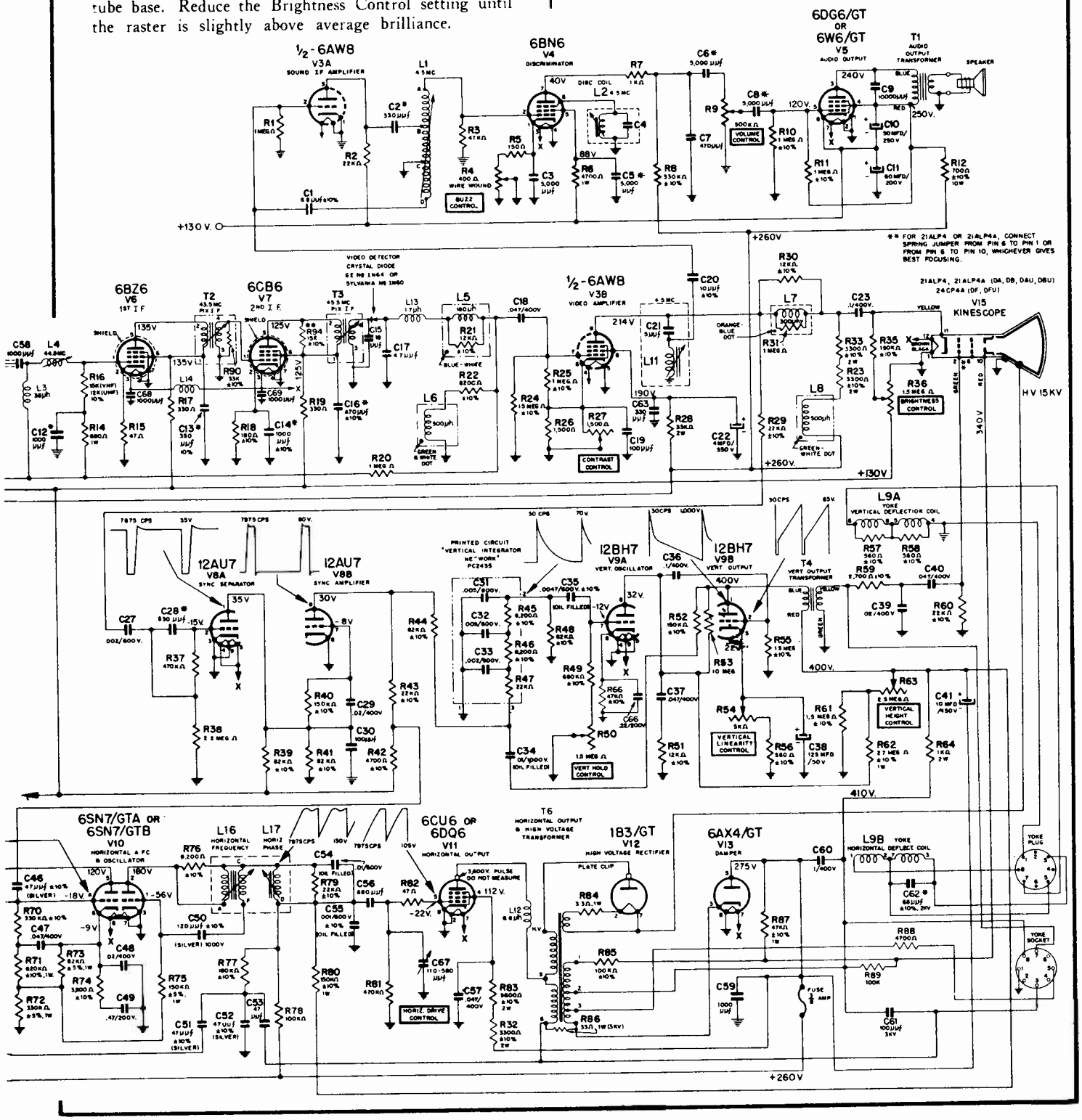

IF ALIGNMENT PROCEDURE

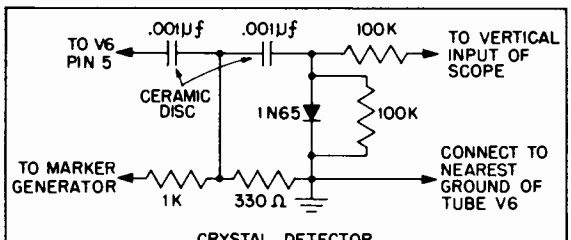

CRYSTAL DETECTOR
FIG. 6

Set the tuner to Channel 12 when not operated by a local station; if 12 is a local station, use Channel 11 or 13. Turn on power switch and proceed as follows.

PIX IF COIL ADJUSTMENT

Insert a 100,000 ohm ½ watt resistor in series with the "hot lead" of the electronic voltmeter and connect it to the junction of L5 and C18. Set the meter switch to the lowest negative scale. Connect the ground lead of meter to chassis.

Connect hot lead of the RF signal generator to injection point of tuner (see circuit diagram) through a 10 uuf condenser.

Adjust the following slugs for maximum output as indicated on the meter at frequencies and sequence indicated below:

L301	44.5 MC
L4	44.5 MC
T2	43.5 MC
T3	45.5 MC

Remove hot lead of RF signal generator leaving the 10 uuf condenser and the 100K resistor in place.

Set the sweep generator to approximately 45 MC. Set the Band Width to the proper setting.

Inject output of sweep generator at the injection point on tuner through the 10 uuf condenser.

Connect crystal circuit as shown in Figure 6 to pin 5 of V6. Connect a 3 volt bias battery into position with plus side to ground and minus side to junction of R14 and L3 (this point is AGC bias voltage) for all alignment procedures. Connect the marker generator to point illustrated in Figure 6 and set it to frequencies of 43.25 MC and 45.75 MC and connect the scope as shown in Figure 6. Alignment is done from the underside of chassis.

Curve shown on scope should be similar to response curve shown in Figure 7.

If markers do not appear as shown in Figure 7, adjust coils L301 and L4 for correct positioning of markers ±10%. (Set tuner to channel that gives best response curve without interference from a station.)

After completion of preceding procedure, remove crystal circuit. The sweep generator still remains at injection point with the 10 uuf condenser. Connect a scope to the 100,000 ohm resistor which was connected at L5 and C18.

Inject the following marker frequencies into the tuner by coupling the marker generator to the half shield of the mixer tube.

43.25 MC	Marker
45.75 MC	Picture Carrier Marker

After alignment, if the wave shape is not the same as shown in Figure 8, allowing 15% tilt, retouch coils L301, L4, T2 and T3.

Note: It is advisable to remove the type 6DQ6 and 6SN7 tubes when aligning the set. If the curve does not appear as illustrated, because of a local station or other interference, or if multiple markers appear, remove the RF Amplifier tube from tuner.

SOUND DISCRIMINATOR (4.5 MC) ADJUSTMENT

Because the transmitted sound signal from a TV station is probably the most accurate available for frequency, it is recommended that a working signal be used for sound alignment. Turn the set on, allow a five to ten minute warm-up and then tune the set to an extremely weak signal. Connect a vacuum tube voltmeter to pin 3 of V3A through a crystal detector probe and set the meter to the —3-volt scale. Tune the video trap L11 and L1 for maximum deflection of the meter (not to exceed 1-volt).

Adjust the discriminator coil L2 for maximum audio output using the transmitted signal from a TV station. This is done with the Buzz Control (R4) set to mid-range. An output meter connected to the voice coil terminals may be used for this adjustment, or it may be done by ear since the coil slug must be set carefully for elimination of buzz. Adjust both the Buzz Control and L2 for maximum audio output and elimination of buzz.

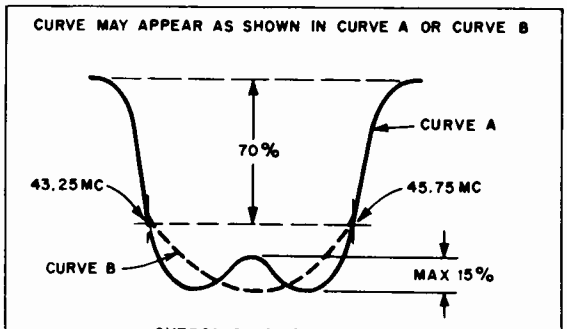

OVERCOUPLED CURVE
FIG. 7

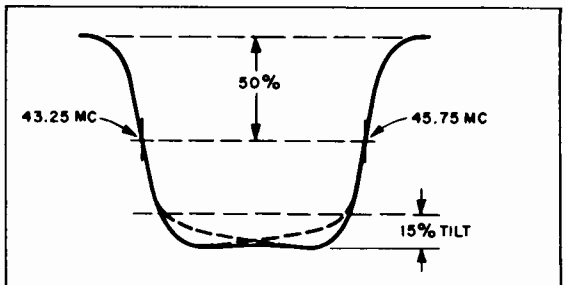

STANDARD RESPONSE
FIG. 8

PHILCO

7H20 and 7H20-U CHASSIS

7H22 — 17" PORTABLE TV CHASSIS

(Material on pages 143 through 148)

TV-7H22 is identical to the TV-7H20 chassis except for the tuner used. The 7H22 uses a T-71 VHF only tuner.

VIDEO IF ALIGNMENT

AM ALIGNMENT

BIAS: Apply to L6U, the AGC line. Inject sufficient voltage to attain 2 volts, peak-to-peak, on scope, using signal input as given below.

CHANNEL SELECTOR: Channel 4

CONTRAST: Fully clockwise (maximum).

SCOPE: Connect through a 10,000 ohm isolating resistor to L1U, the video detector output lug. Calibrate scope for 2 volts peak-to-peak.

AM GENERATOR: Connect to test lug #2 on tuner terminal strip. Inject 700 microvolts, 30% modulated at 400 cycles, at the frequencies indicated in the chart.

Step	*Input Frequency*	*Adjust*
1	47.25 MC	VC1 trap for minimum
2	42.0 MC	T4U for maximum
3	43.5 MC	T2U for maximum
4	45.0 MC	T1 (on tuner) for maximum
5	45.75 MC	T3U for maximum
6	44.4 MC	T1U for maximum

SWEEP ALIGNMENT

SWEEP GENERATOR: Channel 4 sweep signal (69mc with 6mc sweep width) to antenna terminals through a 70Ω/300Ω matching network.

MARKERS: 67.25 MC marker fed into antenna. 45.75 MC marker fed into test lug #2 of tuner. Adjust fine tuning until the 67.25 MC marker becomes coincident with the 45.75 MC marker. *DO NOT disturb the fine tuning during balance of alignment.* Remove the 45.75 MC signal.

ADJUST: T1 (tuner) to position carrier (67.25 MC marker at 50%).
T1U to level curve if tilted.
T2U to position 43.0 MC slope (70.0 MC marker at 50%).
DO NOT adjust poles T3U or T4U from their original AM settings.

4.5 MC TRAP ADJUSTMENT

(1) Connect a 4.5 MC detector to CRT cathode, video output lug, L2N. (see circuit below) Preliminary padding of 4.5 MC detector:— Connect detector to an accurate source of 4.5 MC signal and pad core of transformer for maximum DC voltage.

(2) Connect a V.T.V.M. or 20,000 ohms/volt meter to the detector output.

(3) Detune fine tuning control slightly, in a CW direction, from the point of best picture.

(4) Adjust T4N, top core of transformer (4.5 MC trap), for minimum output.

SOUND IF ALIGNMENT — USING STATION SIGNAL

(1) Connect a V.T.V.M. or 20,000 ohms/volt meter to top of volume control.

(2) Detune top core of transformer T5N to give a positive peak voltage.

(3) Detune the fine tuning control CCW, or reduce signal input to receiver, so as not to exceed .75 volts during alignment (this is to insure non-limiting action). In some areas it may be necessary to apply bias voltage to AGC, L6U of the IF panel, to maintain meter reading below .75 volts.

(4) Adjust bottom core of T4N and bottom core of T5N for maximum DC voltage.

(5) Adjust fine tuning for best picture (remove bias voltage if used) and adjust top core of T5N for zero voltage (crossover).

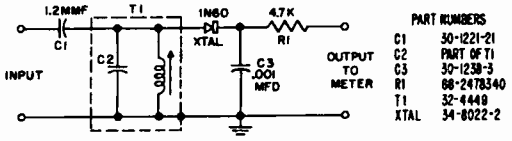

4.5MC DETECTOR PROBE

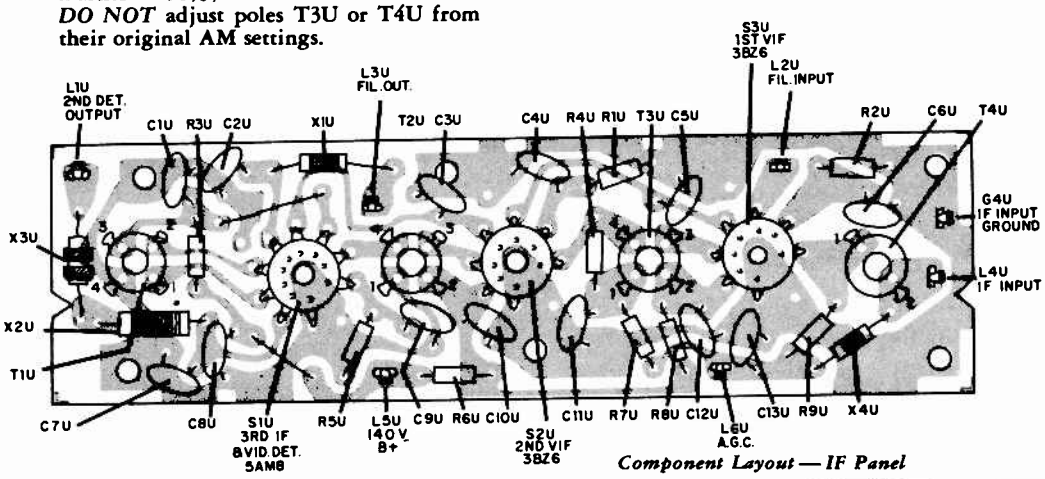

Component Layout — IF Panel

PHILCO Chassis 7H20, 7H20U, 7H22 Schematic Diagram

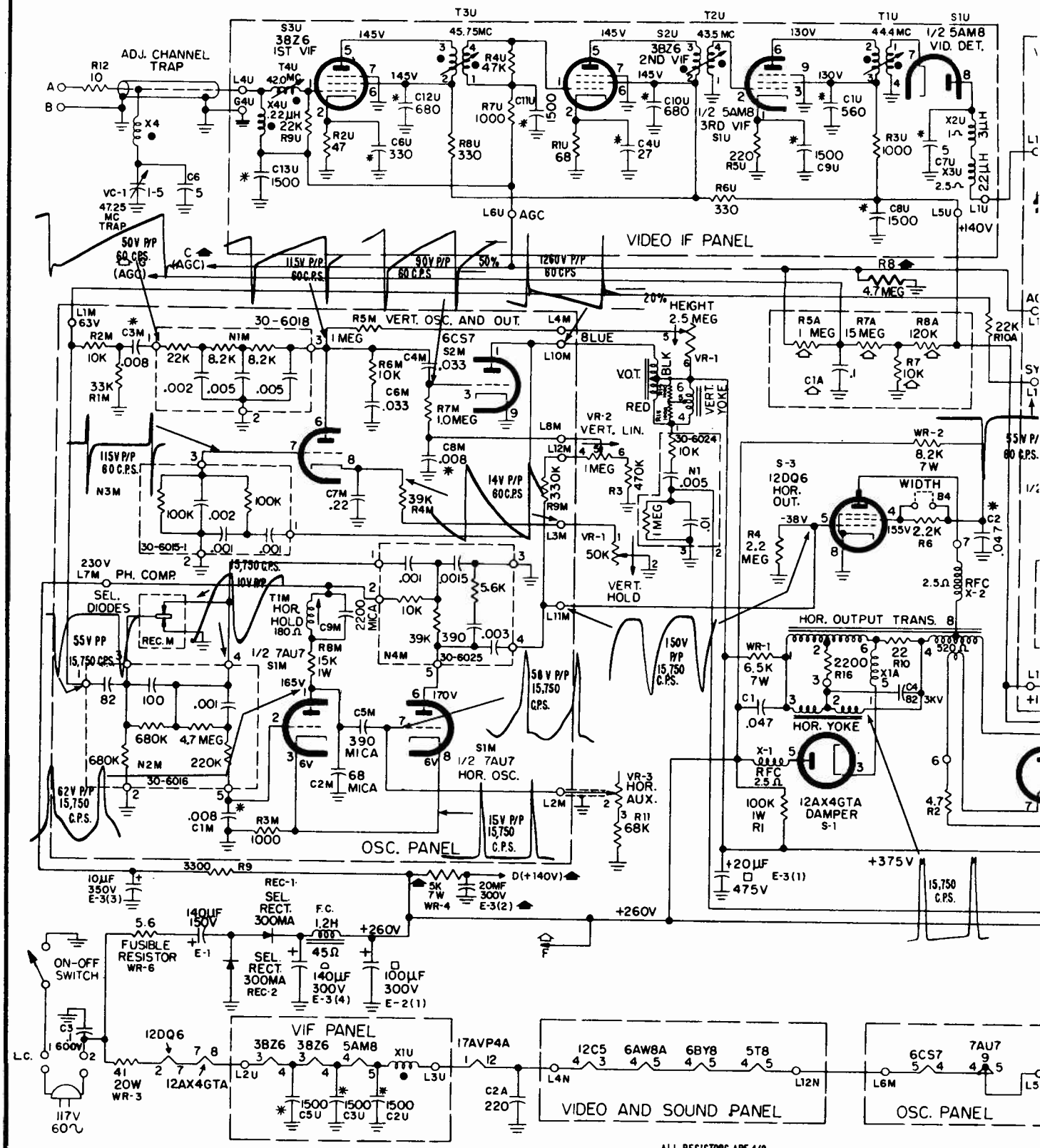

NOTE: ALL CAPACITORS VALUE GREATER THAN 1 ARE IN µµF, VALUES LESS THAN 1 IN µFD UNLESS OTHERWISE NOTED.

ALL CAPACITORS ARE ±20% UNLESS OTHERWISE NOTED.

VOLTAGES ARE DC FROM POINT SHOWN TO CHASSIS GROUND.

DIRECTION OF ARROW THROUGH CONTROL INDICATES CLOCKWISE ROTATION.

ALL RESISTORS ARE 1/2 WATT 10% UNLESS OTHERWISE NOTED.

● INDICATES COIL RESISTANCE OF LESS THAN 1 OHM.

◆ INDICATES PART USED IN CHASSIS 7H20, 7H22 (VHF) ONLY.

◇ INDICATES PART USED IN CHASSIS 7H20U (VHF-UHF) ONLY.

PHILCO Chassis 7H20, 7H20U, 7H22

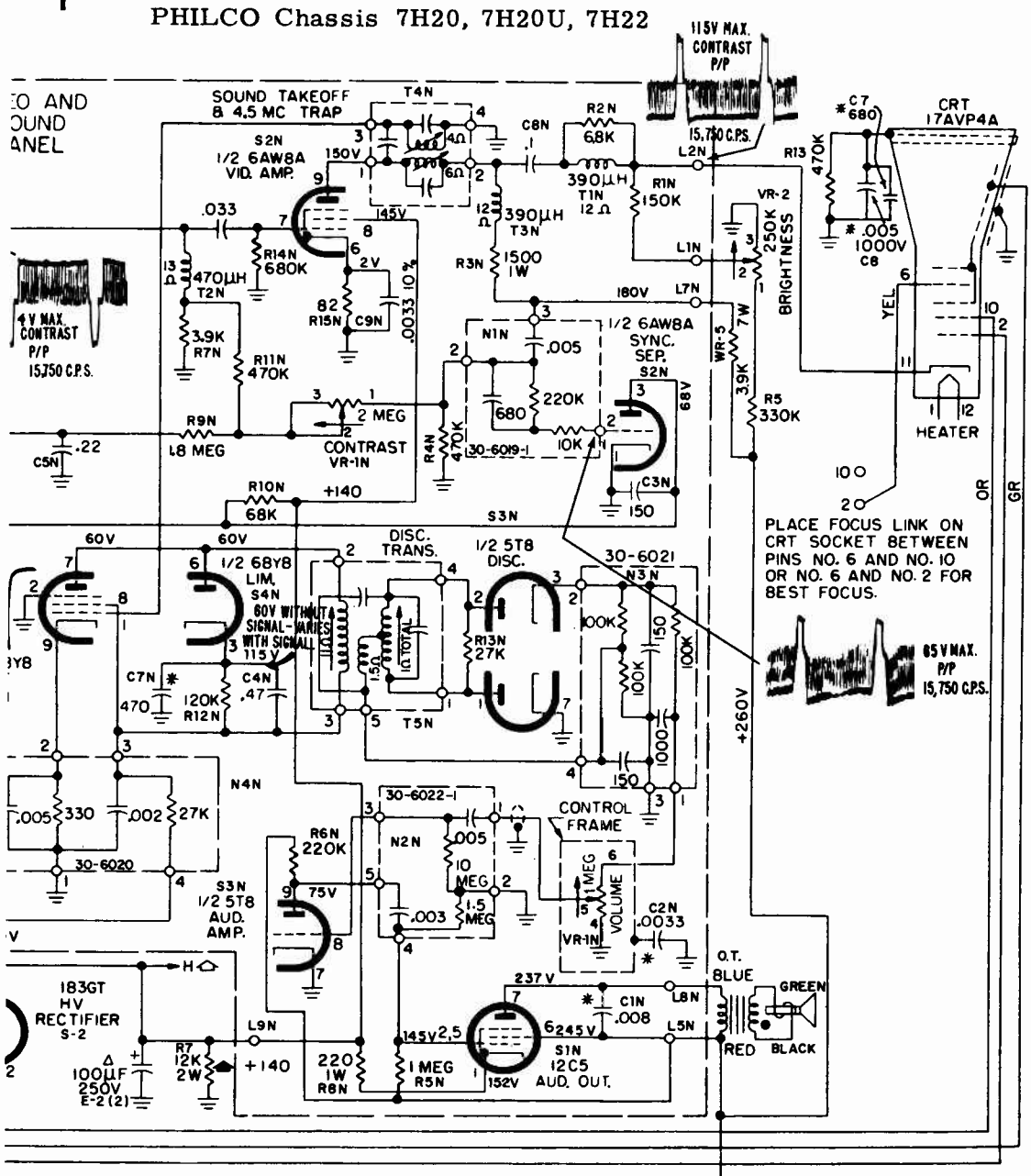

CRITICAL LEAD DRESS ITEMS

1. Blue lead from L8N to O.T. must dress down close to panel and lay between S1N, 12C5 audio output, and L5N, and all slack must be pulled through to side of chassis where O.T. is located. (Prevent audio feedback.)
2. All leads must be dressed clear of WR-1, WR-2, WR-4, WR-5 and R-7 by at least ½". (Prevent lead burning.)
3. WR-3 must dress up above B-2 & B-5 and positioned approx. ½" from side of tuner. Leads must be kept at least ¾" away from body of resistor. (Minimize heat dissipation & prevent lead burning.)
4. All leads connected to S-2, 1B3GT H.V. rectifier, socket must be kept free of solder points, and leads of R-2 must be kept as short as possible. (Prevent corona.)
5. Lead to L10N must dress between N1N & L4N and must lay down close to panel. (Prevent pickup.)
6. Leads to VR1N-7 & 8, AC line must dress down close to panel and leave panel in vicinity of L7N. (Prevent hum.)
7. Lead to L6M must dress down close to panel and must dress between C4M & S2M, 6CS7 vert. osc. & output, and between N4M & S1M, 7AU7 hor. osc. (Prevent regeneration.)
8. All leads connecting to the IF panel must have their slack pulled from under the IF shielded area. On U models these leads must dress thru the same openings as shown in the layout drawing. (Prevent regeneration.)
9. R-13, C7 and C8 must have their leads to G-8 kept at least 1" long, and the lead ends which wire to the CRT bracket must be kept very short. (The lead ends to the bracket must not be allowed to touch the chassis.)
10. Yellow lead to CRTS-11 must dress directly out from chassis and slack must not lay near the yoke. (Prevent pickup.)
11. CRT 2nd anode lead must have excess slack taped to lower side of CRT bell. (Prevent buzz.)
12. Lead to L12N must dress between S3N, 5T8 disc.-1st audio, and T5N, discriminator trans., and must lay down to chassis and away from N2N. (Prevent hum.)
13. Lead from L13N to L1U must dress between T4N, sound takeoff and 4.5mc trap, and C9N and away from T3N, video plate peaking coil, also lead must be kept as short as possible. (Prevent oscillation.)
14. Lead from B-6-1 to B-5-1 must dress under subbase and away from VR-3, hor. ant. control.
15. Green lead from VR1N-6, high side of volume control, must dress away from VR1N-7 & 8 as well as leads to VR1N-7 & 8. Lead must also dress between T4N and C4N. (Prevent hum.)
16. Lug VR1N-4, slow side of volume control must be lifted up and away from cover of pot. (Prevent grounding of lug to pot. frame.)
17. Shielded cable lead must be dressed away from C1N and pushed down close to the panel. (Prevent audio feedback.)

RUN CHANGE INFORMATION

Main Chassis

Run 2 (7H20)
To prevent channel 2 drop-out. Removed damper cathode choke, X-1A and changed horizontal output transformer to part number 32-8795.

Run 3 (7H20) & Run 2 (7H20U)
To improve horizontal linearity. Changed WR2 in value to 5600 ohms, 7 watts, part number 33-1335-134.
Removed 1B3GT filament dropping resistor, R-2.
Changed C1 in value to .033 mfd, part number 30-4650-55.

Oscillator Panel

Run 3 To improve low signal level sync performance.
N4M changed from 30-6017-1 to *30-6025*
R2M changed to 10,000 ohms.

Video Sound Panel

Run 2 To improve low signal level sync. performance.
Added C3N, 150 mmf from sync separator plate to ground.

Run 3 To provide greater contrast control range.
The foil has been split, separating the resistors R9N & R11N. R9N connects to the control arm (lug 2) of VR-1N, the contrast control, and R11N connects to end (lug 3) of VR-1N.

HORIZONTAL OSCILLATOR ADJUSTMENT

(1) Short out T1M, the horizontal hold coil.

(2) Set VR-3, the hor. aux. control, to sync. picture.

(3) Remove short from across T1M, and adjust coil core for picture sync.

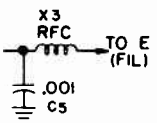

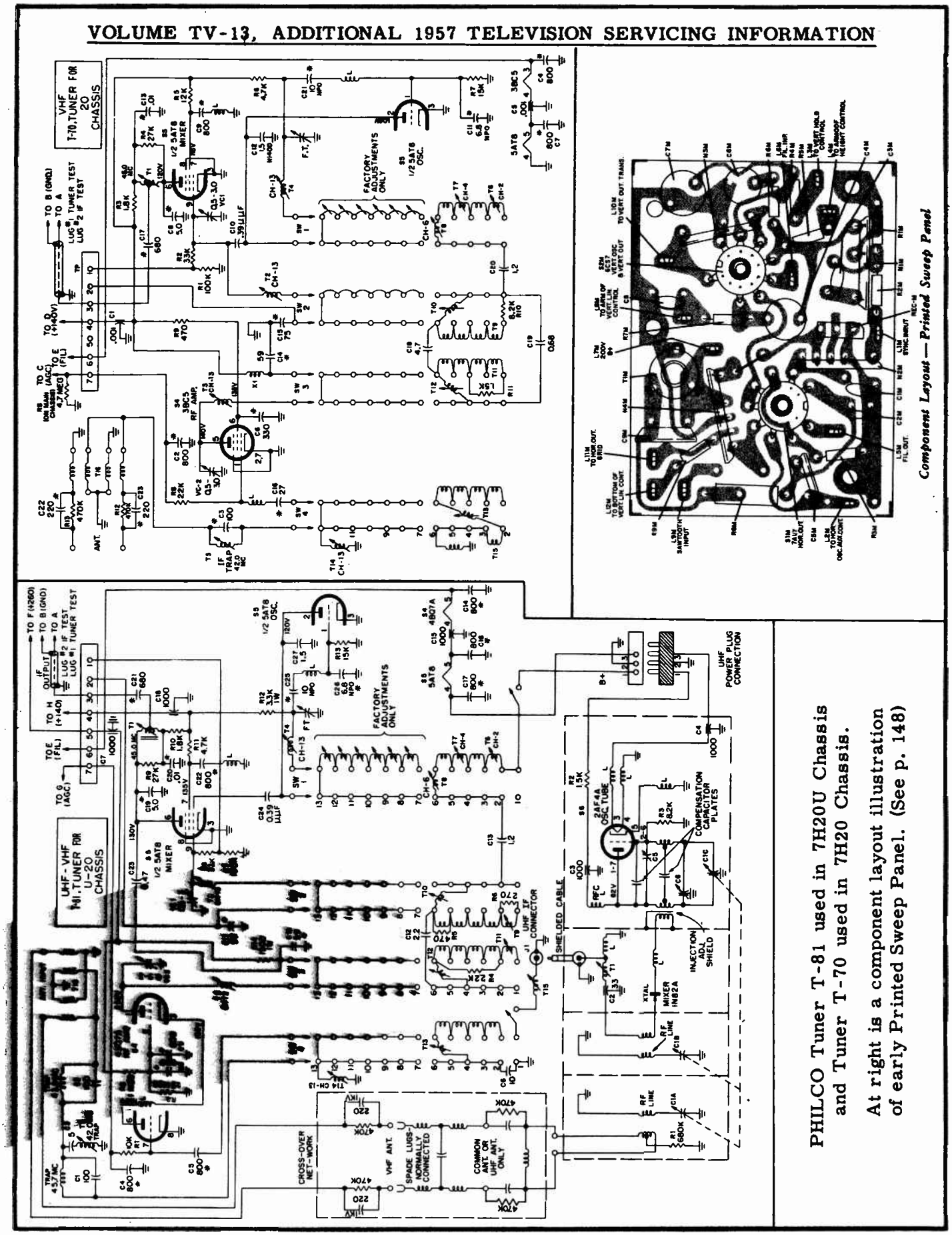

PHILCO Tuner T-81 used in 7H20U Chassis and Tuner T-70 used in 7H20 Chassis.

At right is a component layout illustration of early Printed Sweep Panel. (See p. 148)

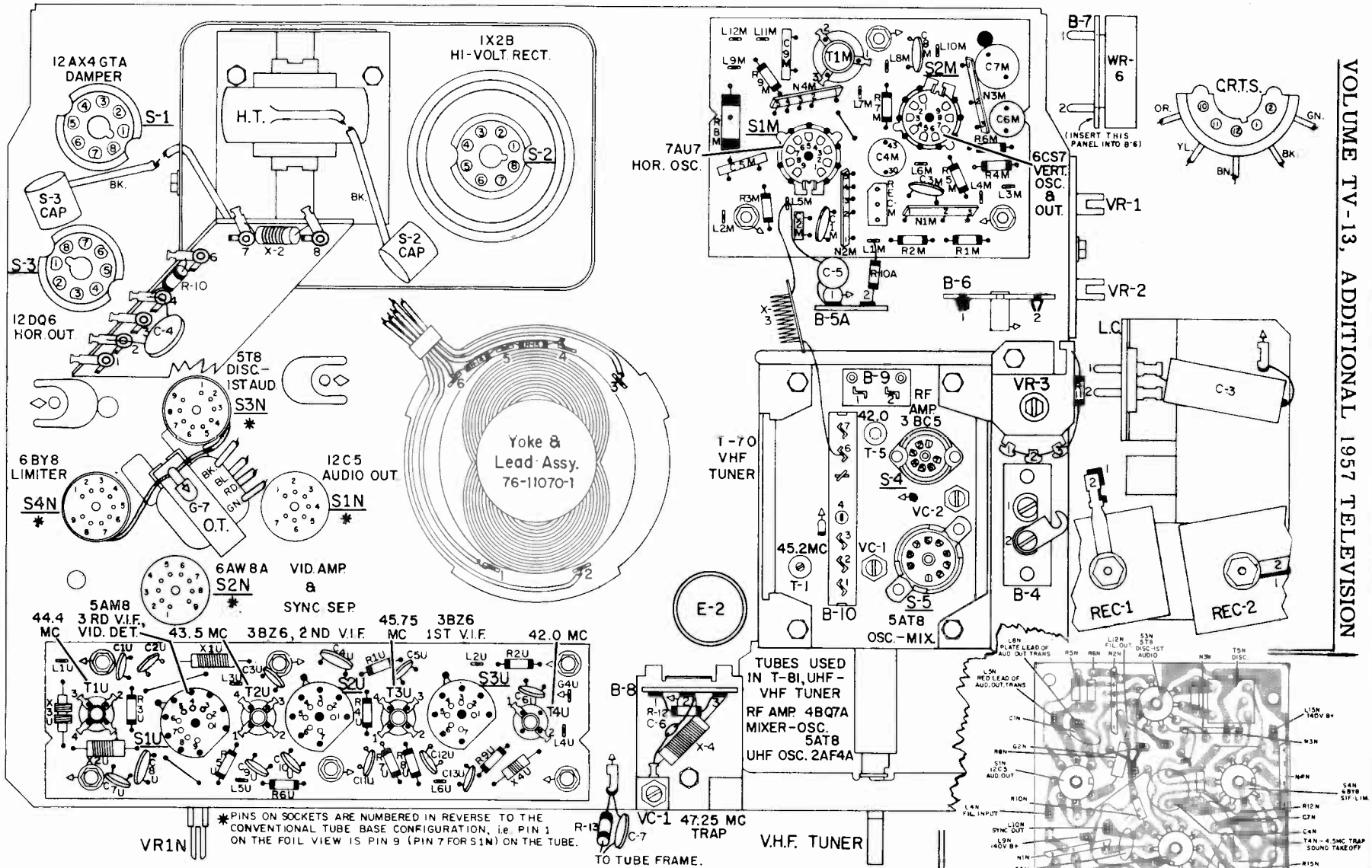

Bottom Wiring View

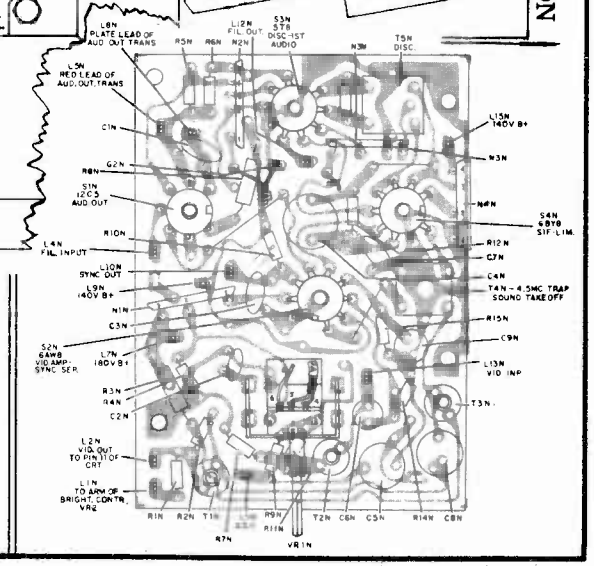

Component Layout — Printed Video and Sound Panel

PHILCO Chassis 7H20, 7H20U, 7H22,
Service Material Continued.

PHILCO Chassis 7H20, 7H20U, 7H22, Continued

NEW SWEEP OSCILLATOR PANEL—CHASSIS 7H20 and 7H20U

In later production of the 7H20 chassis the sweep oscillator panel has been modified. Two of the printed ceramic couplets, N4M in the horizontal osc. output and N3M in the vert. osc. grid, have been replaced with a new type of component pack. Schematically there are no changes except for the printed panel and the two new packs, all other components remain the same. The new part numbers are: N3M — Resistor — condenser network, vert. osc. grid (replaces 30-6015-1) 30-6502-1. N4M — Resistor — condenser network, hor. osc. output (replaces 30-6025) 30-6503-1. Printed panel, sweep oscillator — 54-5266. In cases where the new component pack is unattainable the old couplet may be used as a substitute.

In trouble shooting this panel standard procedure is followed, in that voltage and resistance readings and waveforms are taken at their appropriate points.

If the horizontal oscillator pack N4M is suspected the pack must be isolated to check it for leakage or shorts. This isolation is obtained by opening the link which connects to pin 1 of the pack, removing all the wires from tie lugs L11M and L12M, cutting with a razor blade or a similar sharp device the copper foil to pin 3 of the pack and removing the 7AU7 osc. tube. Note: When cutting the foil, the cut should be made as close to the pin 3 solder connection as possible. Thus resoldering is simplified, as all that is necessary is to extend the solder from the original connection.

With the pack isolated, resistance readings may be taken (meter on high range) between the following points:

Across pins 2 and 5 should be approximately 50K.

Across any other combination should check open.

If a reading is obtained between any two pins other than pins 2 and 5, a short or leakage exists and the component pack should be replaced.

The pack (N3M), in the vert, osc. grid circuit can also be partially checked by a similar method. To isolate this pack, remove the 6CS7 osc.-output tube and remove the wires from tie lug L10M. With this unit now isolated, take resistance readings.

Across pins 1 and 3 or 1 and 2 should check open.

Across pins 2 and 3 should be approximately 100K.

If any reading is obtained from pins 1 and 3 or 1 and 2 or if the wrong resistance reading is received between pins 3 and 2, the pack should be replaced.

After it has been ascertained that a component, within the pack, is defective, the next step is to replace the unit with no damage to the PW panel or the copper foil.

Either of two methods are suggested depending upon the location of the pack.

The first method is to snip the pack pins between the unit and the panel. Then to unsolder the remaining pins one at a time. However, this method can only be applied when the unit is in a position where the pins are accessible. In some cases the pack may be located in a group of components, which makes snipping of the pins impractical, thus requiring the second method. In this method, the complete assembly is unsoldered as a unit, by applying heat to all of its connecting pins simultaneously. Tips may be made from #10 copper wire for either the soldering iron or gun, for this purpose. The tips should be bent so that only a single wire will come in contact with the soldered pins. The pins from the pack are staggered for rigidity and spacing, so the improvised soldering tip should be placed down the center of the pins, in order for contact to be made with all at the same time. The tip which comes in contact with the pins should be bent to the relative size of the component pack.

As heat is applied, the pack should be grasped by the free hand and worked loose. A slight pull is necessary, as one of the lugs is flattened, to hold the unit in place before soldering. Care should be taken that not too much pressure is exerted as this could possibly crack the panel. Note: It is recommended that a 40 watt soldering iron be used for any work which is done on a printed wire panel; however if some other type of iron or a gun is used, the precaution against applying excessive heat should be observed.

It is recommended that no external resistor or capacitor be wired into the circuit to replace a defective component in a component pack. The pack should be replaced in its entirety as would any single component which proved defective. The recommended procedures for checking the pack *do not* include piercing the phonolic coating in an attempt to reach the end of a component with test leads.

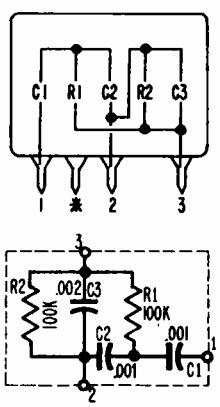

N3M Component Pack

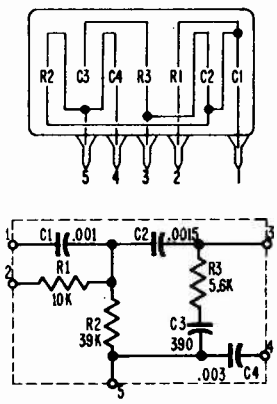

N4M Component Pack

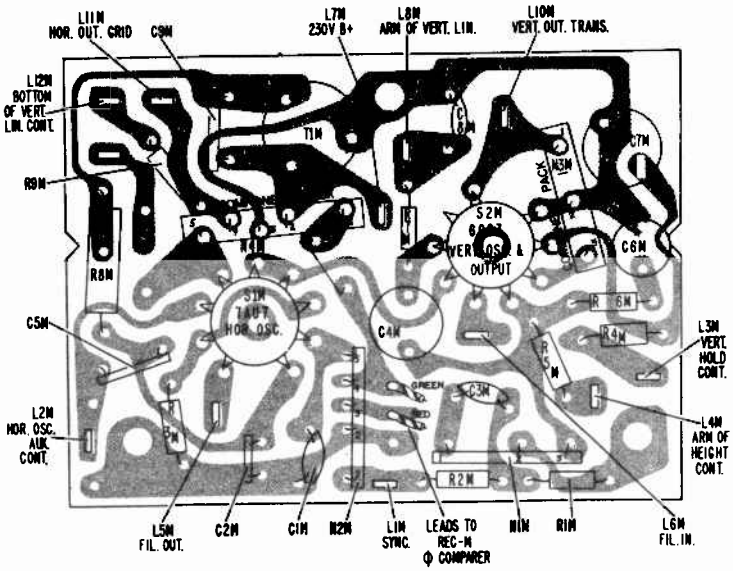

Component Layout — Printed Sweep Panel

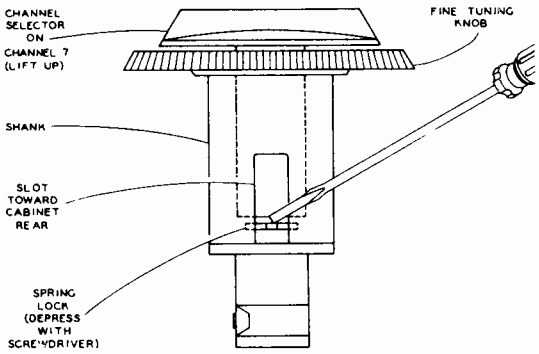

CHANNEL SELECTOR KNOB REMOVAL

RCA VICTOR

PORTABLE TELEVISION RECEIVERS
MODELS

17-S-7090, 17-S-7090U
17-S-7092, 17-S-7092U
17-S-7093, 17-S-7093U
17-S-7099, 17-S-7099U

Chassis No. 5377 or 5378

(Service material on this and the next seven pages.)

CHASSIS REMOVAL

The following procedure should be followed when removing the chassis for servicing.

Remove the rear cover of the receiver.

Pull upwards on the brightness, contrast and volume knobs until the knob shafts disengage from the sleevings on the control shafts. Do not attempt to completely remove these knobs as they are held captive to the cabinet by retaining clips. Leave the sleevings on the shafts of the controls.

The channel selector knob is held captive to the selector shaft by a spring lock which must be released to remove the channel selector and fine tuning knobs. Switch the channel selector to the channel 7 position. Turn the fine tuning knob so that the slot in the knob is facing toward the rear of the receiver. With a small shank screwdriver reach in from the rear of the cabinet and release the lock while pulling upward on the channel selector knob. Refer to figure for detail on releasing the spring lock.

The chassis mounting feet slide into four slots in the metal bottom of the cabinet. Slide the chassis to the rear approximately ¾" and lift up disengaging the feet from the cabinet and lift the chassis out of the cabinet.

When it is desired to completely isolate the chassis from the cabinet, the high voltage lead and kinescope socket must be disconnected. Remove the ion trap magnet. The yoke retaining clamp is removed by pressing the ends together and sliding the clamp off the kinescope neck.

The yoke is wired directly to the chassis and should be slid off the kinescope neck and left connected to the chassis. The speaker also is wired directly to the chassis and should be dismounted and left connected to the chassis.

Replacing the chassis is simply a reversal of the above removal procedure. Make sure the retainers holding the control knobs captive to the cabinet are in place, if they were removed for any reason. The spring lock on the channel selector knob will automatically lock when the knob is replaced on the shaft.

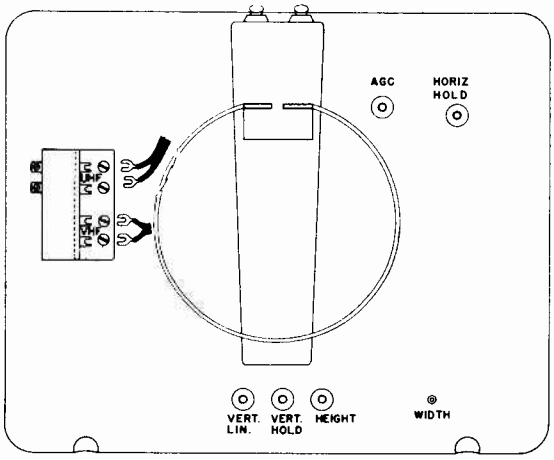

CHASSIS REAR VIEW

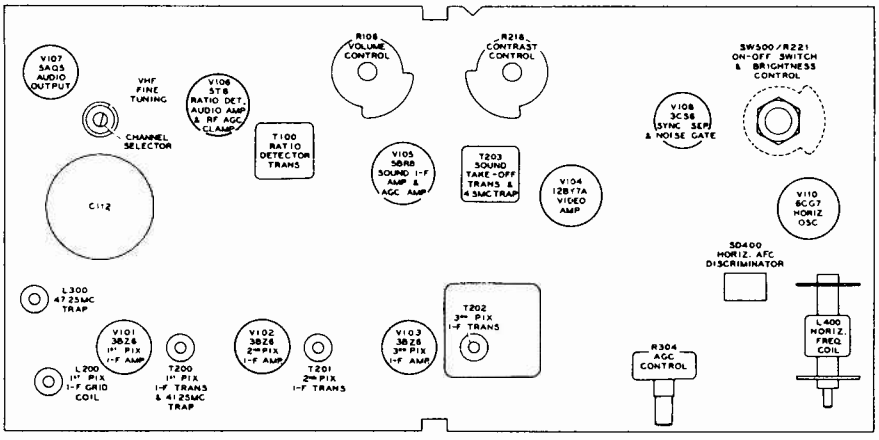

PRINTED BOARD TOP VIEW

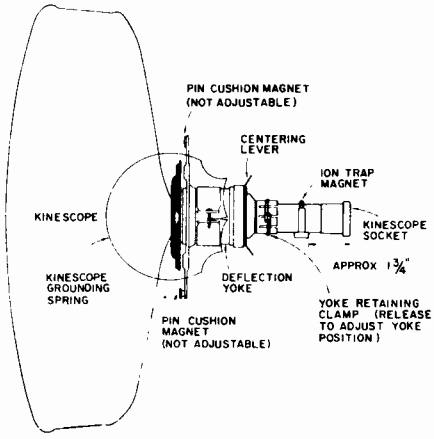

YOKE ADJUSTMENTS

RCA Victor Portable TV Receivers

Models 17S7090, -U, 17S7092, -U, 17S7093, -U, 17S7099, -U.

(Continued)

SCHEMATIC DIAGRAM 95359-3 TUNER

(Used on 5377 Chassis)

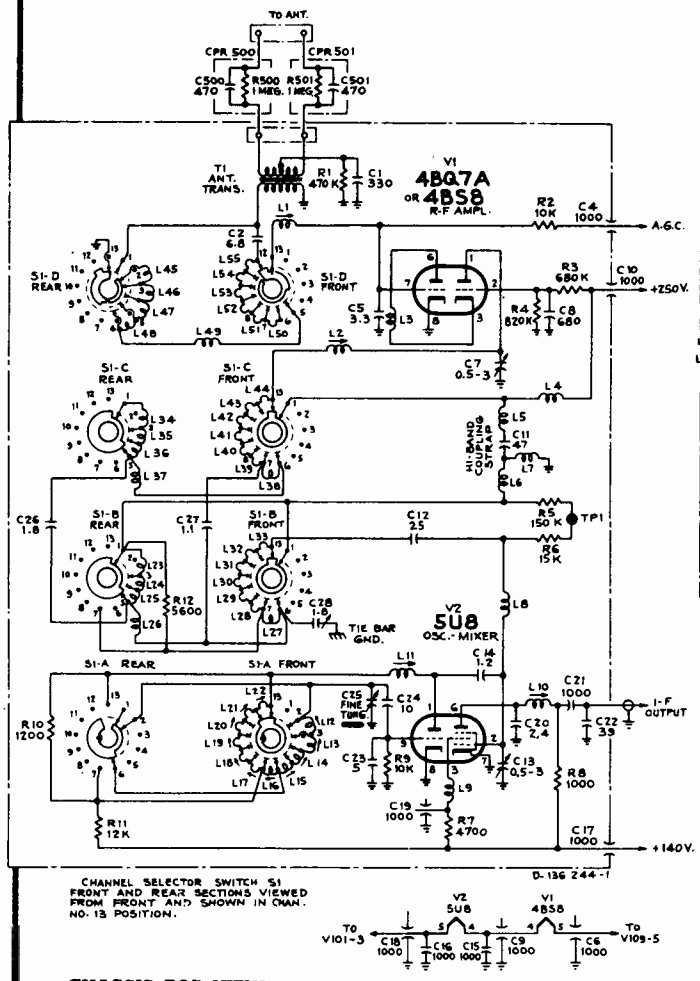

CHANNEL SELECTOR SWITCH S1 FRONT AND REAR SECTIONS VIEWED FROM FRONT AND SHOWN IN CHAN. NO. 13 POSITION.

CIRCUIT SCHEMATIC DIAGRAM 5378 CHASSIS

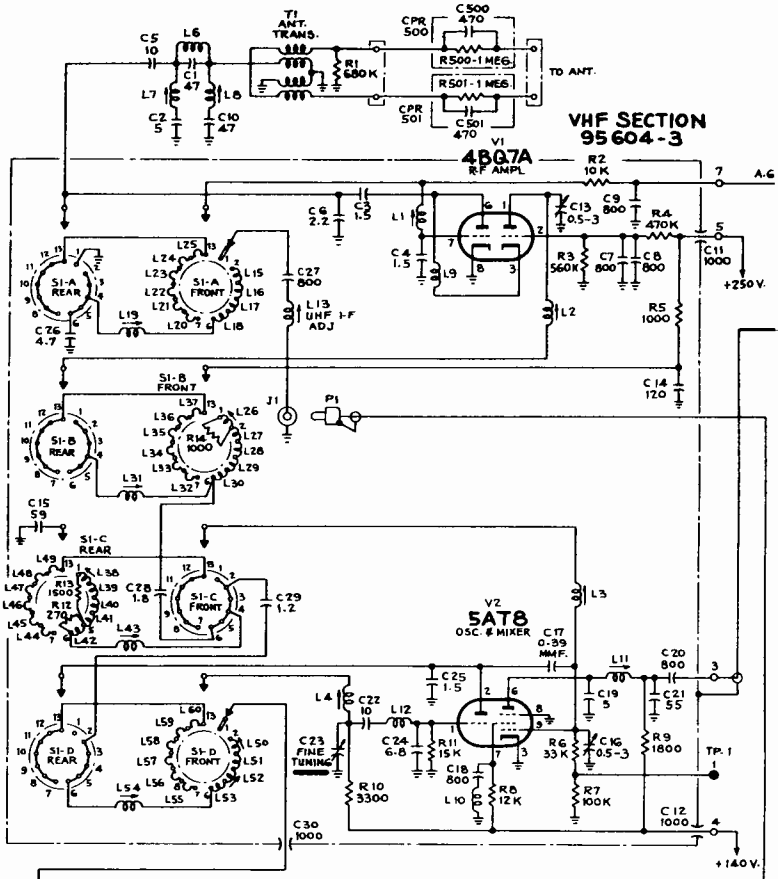

UHF SECTION-93870-5

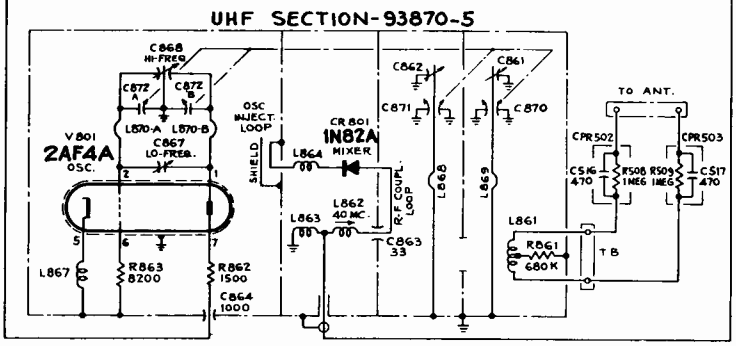

CHASSIS TOP VIEW

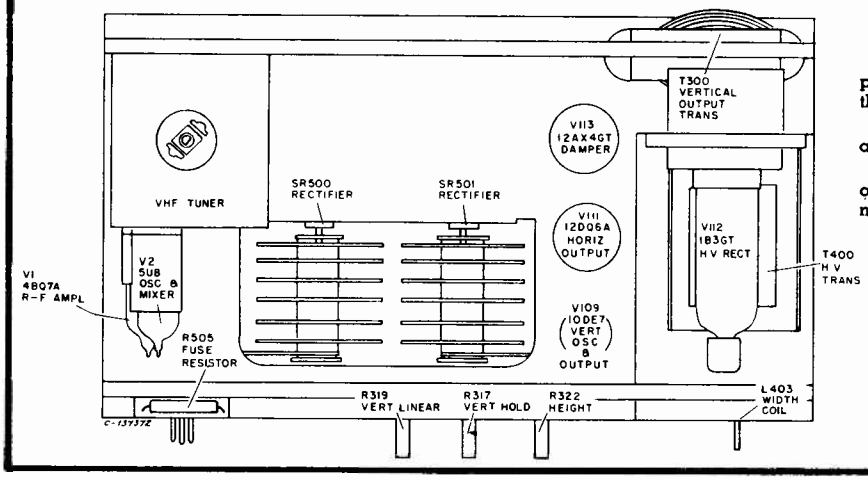

CHASSIS IDENTIFICATION

Chassis 5377 is used in receivers with VHF only. It employs a 95359-3 VHF tuner. The schematic diagram for this tuner is shown at the left side of this sheet.

Chassis 5378 is used in UHF/VHF receivers. It employs a 95604-3 VHF tuner and a 93870-5 UHF tuner.

The chassis designation is stamped on the main chassis of the receiver as the first four digits of the receiver serial number.

RCA VICTOR

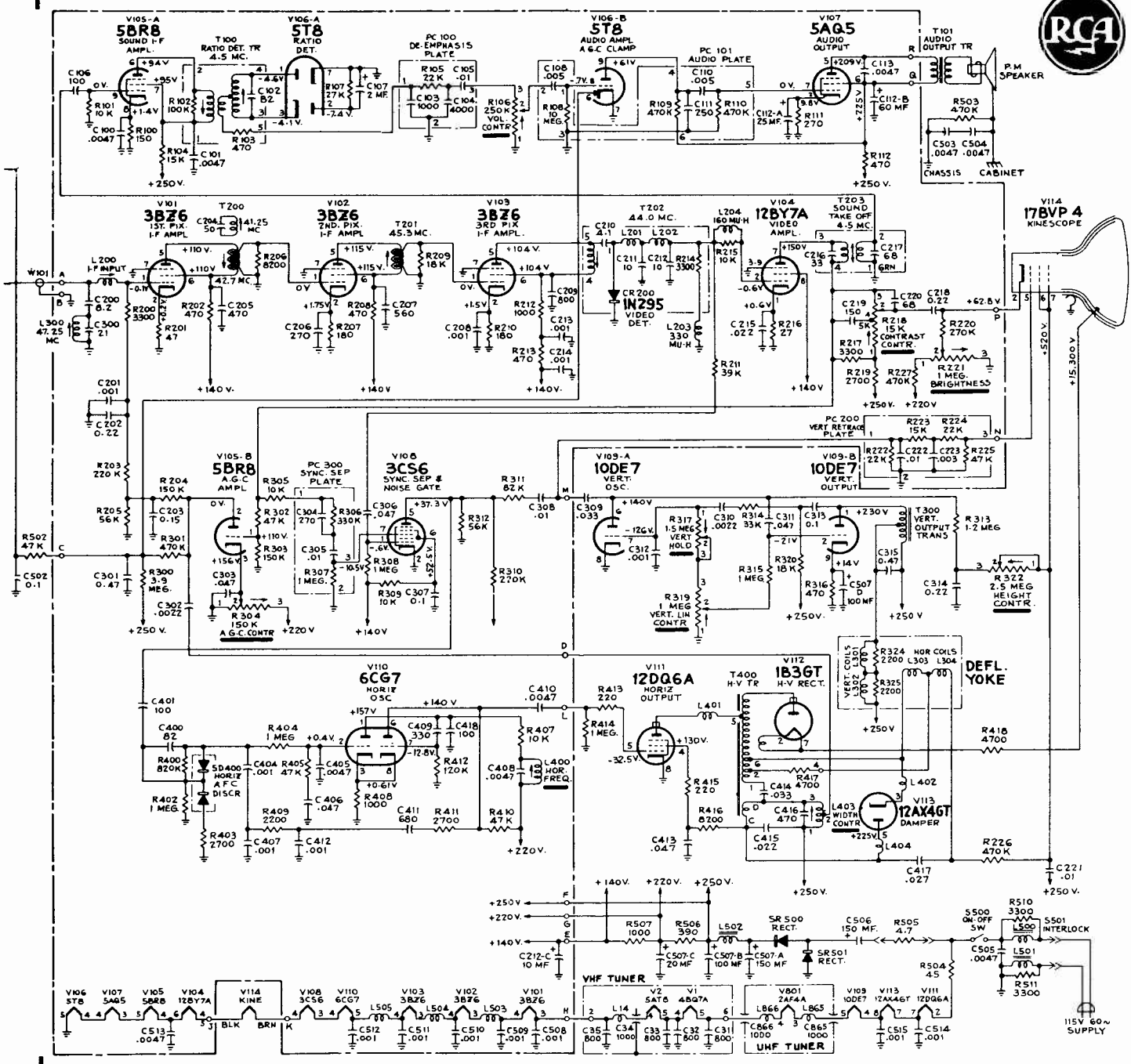

KINESCOPE AND MASK CLEANING

The chassis should be completely removed from the cabinet, including the speaker and yoke assemblies.

Pull off the top trim at each side of the cabinet. The trim is held in place by three spring clips and is readily removed by carefully pulling it outward.

Remove the three screws at each side, revealed when the trim is removed, which hold the top and bottom sections of the cabinet together and lift off the top section of the cabinet.

There is a screw at each side of the cabinet holding the kinescope mounting assembly fastened to the cabinet sides. Remove these two screws and lift out the kinescope and mounting assembly as a unit.

The plastic mask and kinescope should only be cleaned with water, a mild liquid detergent and a soft cloth. Do not use cleaners, polishes, oils or waxes on the plastic mask. Care should be observed not to scratch the mask surface and the mask should be wiped dry immediately.

If kinescope replacement is required, loosen the two nuts on the mounting bracket assembly and install the new kinescope in the bracket assembly. Reassemble the assembly and reinstall the assembly and kinescope in the cabinet as a unit.

AGC ADJUSTMENT.—To check the adjustment of the AGC Threshold Control, tune in a strong signal and sync the picture. Momentarily remove the signal by switching off channel and then back. If the picture reappears immediately, the receiver is not overloading due to improper setting of R304. If the picture requires an appreciable portion of a second to reappear, or bends excessively, R304 should be readjusted.

Turn R304 fully counter-clockwise, then clockwise until there is a bend or shift in the picture. Then turn R304 counter-clockwise just sufficiently to remove this bend or shift.

The AGC control adjustment should be made on a strong signal if possible.

RCA Victor | ALIGNMENT PROCEDURE | 17-S-7090 to 17-S-7099 Incl. 17-S-7090U to 17-S-7099U Incl.

PICTURE I-F TRANSFORMER AND TRAP ADJUSTMENTS

TEST EQUIPMENT CONNECTIONS:

BIAS SUPPLY ..... Apply —5 volts to I-F AGC bus at junction of C203 and R205. Ground positive lead to chassis.

OSCILLOSCOPE..... Connect in series with 33,000 ohm composition resistor to Video Detector output at junction of L204, R211 and R215 using direct probe. Ground lead connected to printed board supporting frame.

SWEEP GENERATOR..... Connect I-F output in series with .0047 ceramic capacitor to junction of L200 and R200 at grid, pin 1, of V101.

SIGNAL GENERATOR.... Couple loosely to sweep output cable to provide markers.

STEP		SWEEP GENERATOR	SIGNAL GENERATOR	ADJUST	REMARKS
1	Detune tuner mixer plate coil	—	—	L10 or L11 (mixer plate)	Turn core fully counter-clockwise
2	Adjust 41.25 mc. trap	40 - 50 mc. (I-F)	41.25 mc.	T200 (top core)	Minimum 41.25 mc. indication on response curve
3	Adjust 3rd pix. I-F transformer	40 - 50 mc. (I-F)	44.0 mc.	T202 (top)	Peak T200 (bottom core), T201 and T202 on frequency then adjust all three for correct response as shown below.
4	Adjust 2nd pix. I-F transformer	40 - 50 mc. (I-F)	45.3 mc.	T201 (top)	
5	Adjust 1st pix. I-F transformer	40 - 50 mc. (I-F)	42.7 mc.	T200 (bottom core)	
6	Move sweep and signal generators to terminal "A" on printed board.				Use same sweep termination
	Adjust 47.25 mc. trap	40 - 50 mc.	47.25 mc.	L200 (top)	Minimum 47.25 mc. indication on response curve
Retouch T200 (bottom core), T201 and T202 for proper response as shown below.					

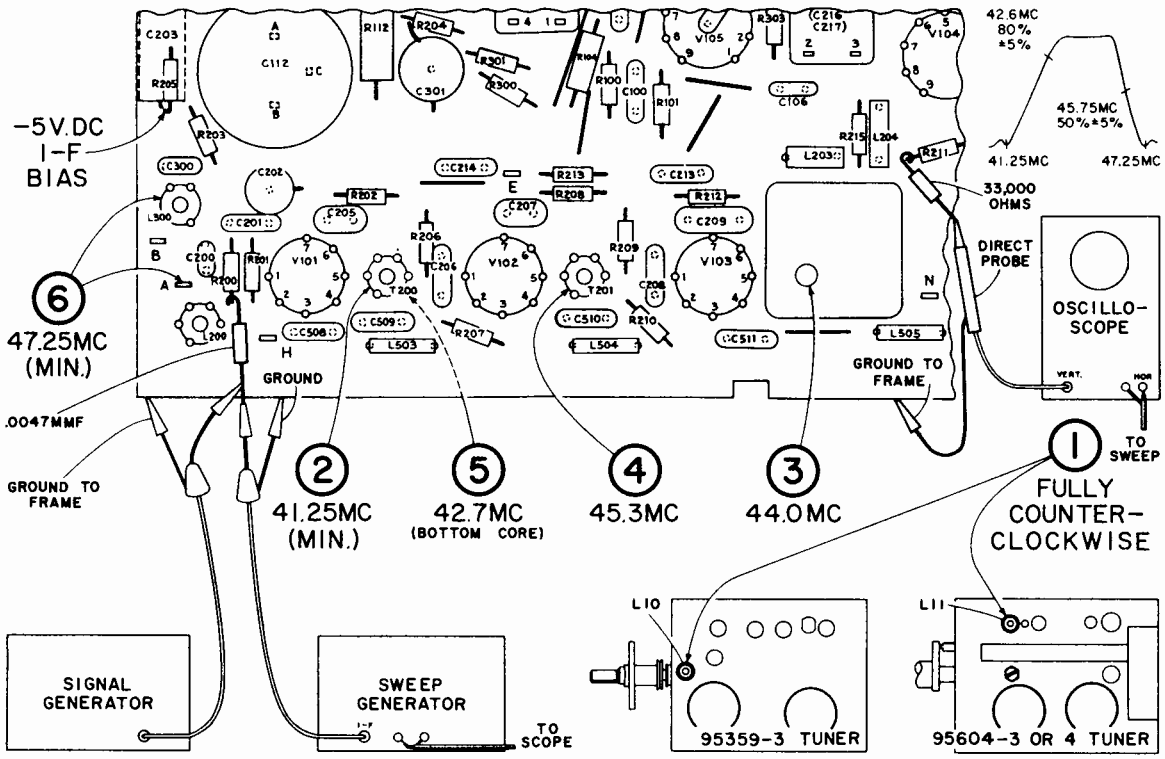

Figure 15—Picture I-F Transformer and Trap Adjustments

RCA Victor | ALIGNMENT PROCEDURE | 17-S-7090 to 17-S-7099 Incl. 17-S-7090U to 17-S-7099U Incl.

SWEEP ALIGNMENT OF PICTURE I-F

TEST EQUIPMENT CONNECTIONS:

BIAS SUPPLY ..... Apply —5 volts to I-F AGC bus at junction of C203 and R205. Ground positive lead to chassis.
OSCILLOSCOPE ..... Connect in series with 33,000 ohm composition resistor to Video Detector output at junction of L204, R211 and R215. Ground lead connected to printed board supporting frame.
SWEEP GENERATOR ..... Connect in series with 1500 mmf. capacitor to test point TP1. Use shortest leads possible.
SIGNAL GENERATOR ..... Couple loosely to sweep output cable to provide markers.
VACUUM TUBE VOLTMETER .... Connect to Video Detector output at same point as oscilloscope. Use DC probe.

STEP		SWEEP GENERATOR	SIGNAL GENERATOR	ADJUST	REMARKS
Set channel selector to channel between 7 and 13 which causes minimum distortion of response as fine tuning is rotated.					
1	Adjust mixer plate coil	40 - 50 mc. (I-F)	42.6 mc. 45.75 mc.	L10 or L11	Sweep output set for 3 v. P-P on scope. Adjust for response shown.
2	Adjust I-F input coil	40 - 50 mc. (I-F)	42.6 mc. 45.75 mc.	L200	
3	Retouch 41.25 mc. trap	40 - 50 mc. (I-F)	41.25 mc.	T200	Minimum at 41.25 mc.
4	Retouch 47.25 mc. trap	40 - 50 mc. (I-F)	47.25 mc.	L300	Minimum at 47.25 mc.
Retouch L10 (or L11) and L200 by repeating steps 1 and 2.					
Reduce I-F bias to —4 volts. Couple signal generator to mixer, in series with pad shown in Figure 12, using tube shield jig (see below). Set generator to 45.75 mc. and adjust output for exactly one (1) volt on the "VoltOhmyst". Remove the pad. Do not change generator output in steps 5 and 6.					
5	Set 41.25 mc. attenuation	—	41.25 mc.	T200 (clockwise)	Adjust for 0.5 to 1.0 volt on VTVM
6	Set 47.25 mc. attenuation	—	47.25 mc.	L300 (clockwise)	Adjust for 0.5 volt or less on VTVM

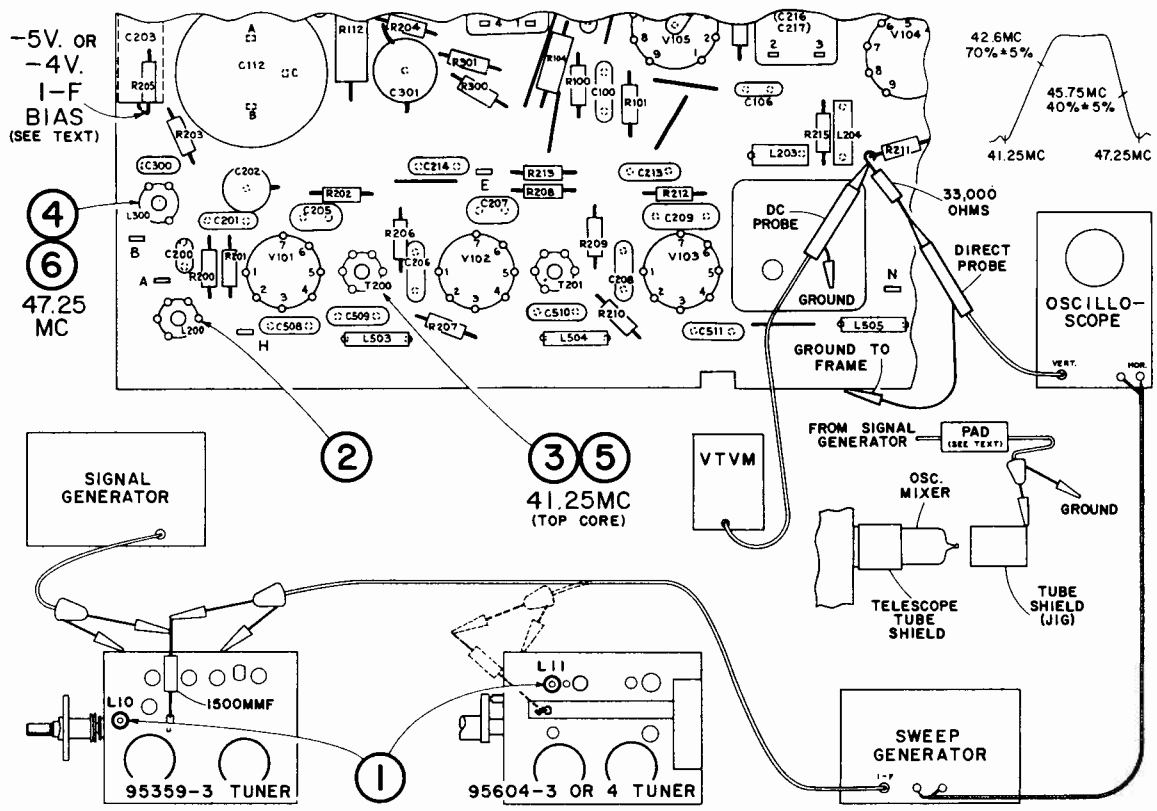

Figure 16—Sweep Alignment from Mixer Grid

RCA Victor | ALIGNMENT PROCEDURE | 17-S-7090 to 17-S-7099 Incl. 17-S-7090U to 17-S-7099U Incl.

TUNER I-F ALIGNMENT — UHF/VHF MODELS ONLY

TEST EQUIPMENT CONNECTIONS:

BIAS SUPPLY ..... Apply —2.5 volts to AGC terminal 7 on the tuner. Ground the positive lead to tuner case.

OSCILLOSCOPE ..... Connect 1500 mmf. capacittor & 220 ohm resistor in series from pin 1 of V1 to ground. Connect capacitor to pin 1 & resistor to ground. Connect scope to junction of resistor & capacitor. (See below.)

SWEEP GENERATOR ..... Connect to I-F input jack J1 using input head shown in Figure 13.

SIGNAL GENERATOR .... Couple loosely to sweep output cable to provide markers.

STEP		SWEEP GENERATOR	SIGNAL GENERATOR	ADJUST	REMARKS
Set channel selector to the UHF position between channels 2 and 13.					
1	Adjust I-F input coil	40 - 50 mc. (I-F)	41.25 mc. 45.75 mc.	L13	L13 for max. gain and response "A". Generator set for .5 v. P-P or less on scope.
Remove capacitor and resistor and move oscilloscope to I-F output terminal 3 on the tuner, point "X" in figure below.					
2	Adjust I-F interstage coils	40 - 50 mc. (I-F)	41.25 mc. 45.75 mc.	L26 and L38	Adjust L26 and L38 for response "A". Bandwidth is adjusted by moving entire coil L26 with relation to L38. (See special note following.)
3	Adjust I-F bandwidth	40 - 50 mc. (I-F)	41.25 mc. 45.75 mc.	L26 pos.	
Note:—L26 and L38 are inaccessible with selector in UHF position. To adjust, observe response in UHF position, switch to channel 9 to adjust, then back to UHF to observe results. Repeat until correct response, shown in "A," is obtained.					
4	Move oscilloscope to Video Detector output at R211. Use DC probe in series with 33,000 ohm resistor.				
	Retouch I-F interstage coils	40 - 50 mc. (I-F)	42.6 mc. 45.75 mc.	L26 and L38	Retouch L26 and L38 for curve "B" below. Use 3 v. P-P.

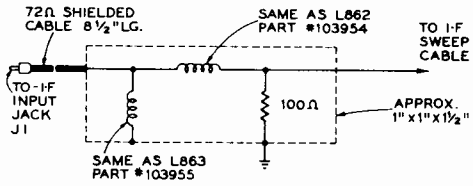

Figure 13—Tuner I-F Input Head

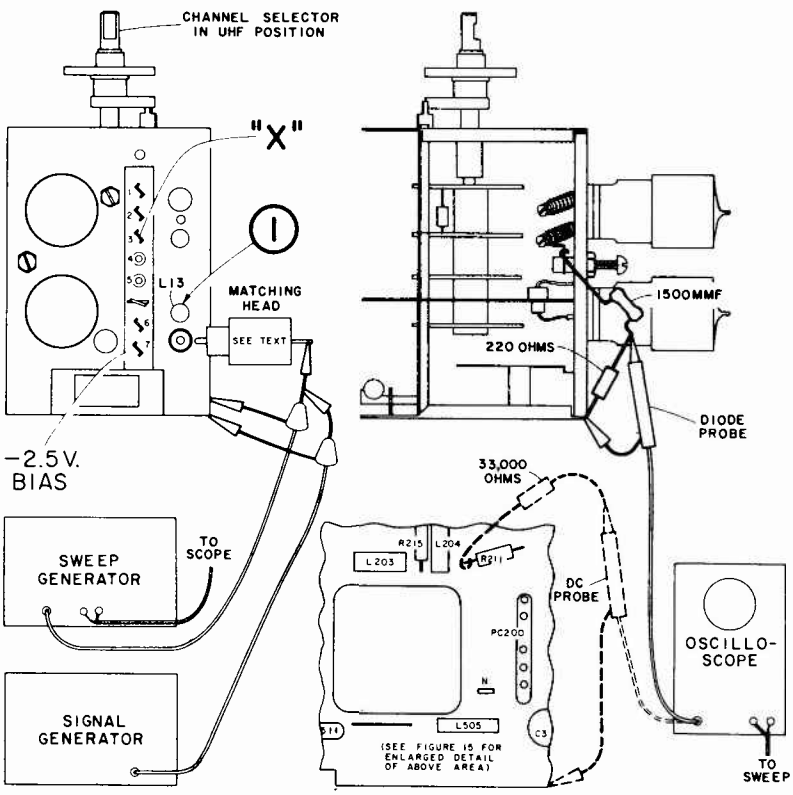

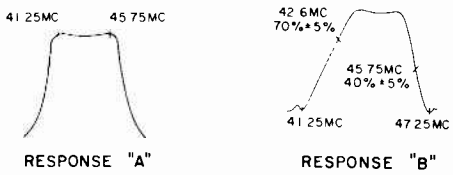

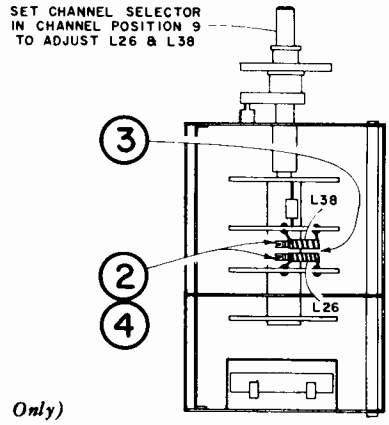

Figure 17—Tuner I-F Alignment (UHF/VHF Models Only)

RCA Victor | ALIGNMENT PROCEDURE | 17-S-7090 to 17-S-7099 Incl. 17-S-7090U to 17-S-7099U Incl.

SOUND I-F, RATIO DETECTOR AND 4.5 MC TRAP ALIGNMENT

TEST EQUIPMENT CONNECTIONS:

OSCILLOSCOPE ..... Connect to terminal "P" on the printed board at the kinescope cathode, using the diode probe.

SIGNAL GENERATOR ..... Connect to Video Detector output at the junction of L204, R211 and R215.

VACUUM TUBE VOLTMETER .. Connect to terminal 1 of De-emphasis Plate PC100 in series with 100,000 ohm resistor using direct probe. Connect the meter ground lead to the junction of the two 100,000 ohm resistors installed from R107 to ground. (See illustration and Miscellaneous below.)

MISCELLANEOUS ..... Connect a matched pair of 100,000 ohm resistors in series from pin 2 of V106A Ratio Detector to ground at R107.
Connect a jumper from the grid, pin 1 of V103, to ground at R209.

STEP		SIGNAL GENERATOR	ADJUST	REMARKS
1	Adjust Ratio Detector Trans. Secondary	4.5 mc.	T100 (Top core)	Adjust T100 (top core) for maximum reading on VTVM. Use peak which separates core farthest from bottom core.
2	Adjust Ratio Detector Trans. Primary	4.5 mc.	T100 (Bottom core)	Adjust T100 (bottom core) for maximum reading on VTVM. Use peak which separates core farthest from top core.
3	Adjust Sound Take-Off Trans.	4.5 mc.	T203 (Top core)	Adjust T203 (top core) for maximum reading on VTVM.
4	Adjust 4.5 mc. Trap	4.5 mc. (Modulate 30% with 400 cycles)	T203 (Bottom core)	Adjust T203 (bottom core) for minimum 4.5 mc. output indication on the oscilloscope.
Repeat steps 1, 2 and 3 for maximum reading on the VTVM. Use the lowest output from the signal generator which will produce a usable reading on the meter when making the final touches on these adjustments.				
5	Adjust Ratio Detector Trans. Secondary for crossover	4.5 mc.	T100 (Top core)	Adjust T100 (top core) for zero output reading on the VTVM.

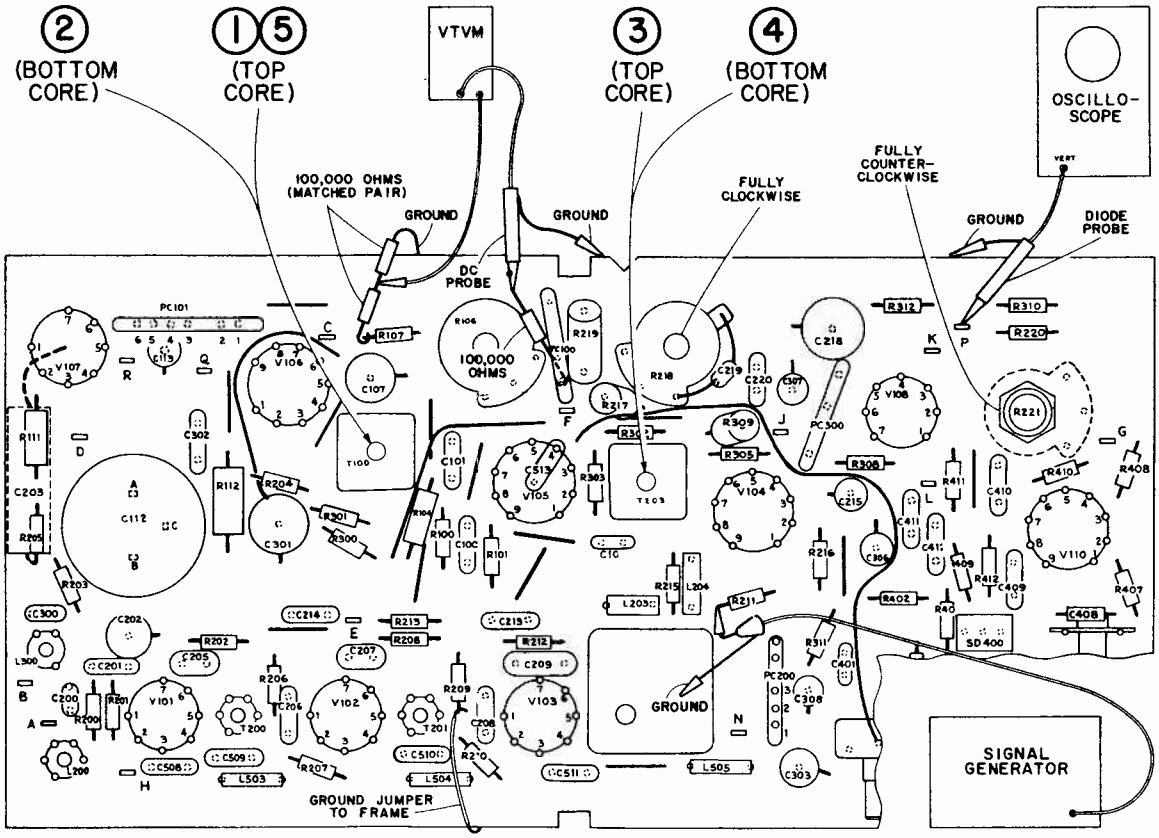

Figure 21—Sound I-F, Ratio Detector and 4.5 mc. Trap Alignment

RCA Victor Models 17S7090, -U, 17S7092, -U, 17S7093, -U, 17S7099, -U, Continued

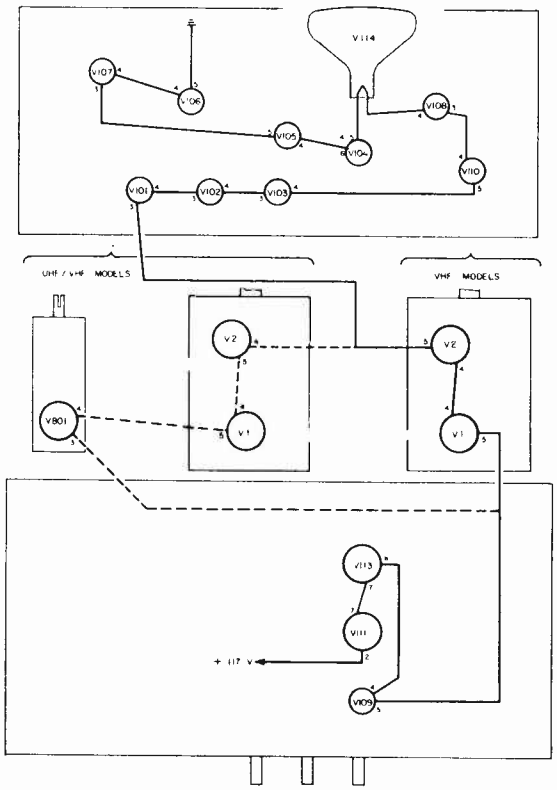

SERIES HEATER SEQUENCE

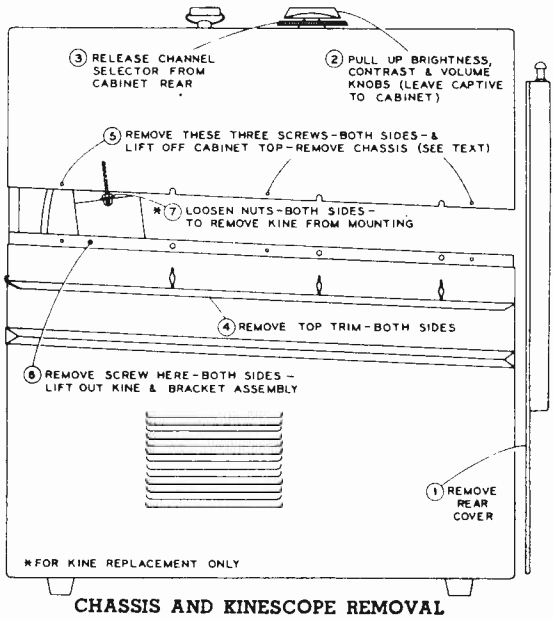

CHASSIS AND KINESCOPE REMOVAL

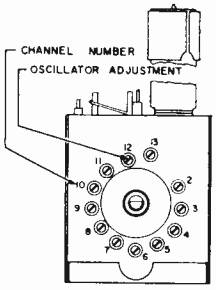

95359-3 TUNER

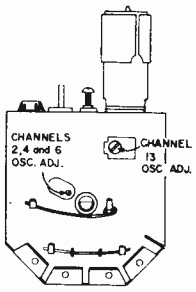

95604-3 TUNER

VHF OSCILLATOR ADJUSTMENTS

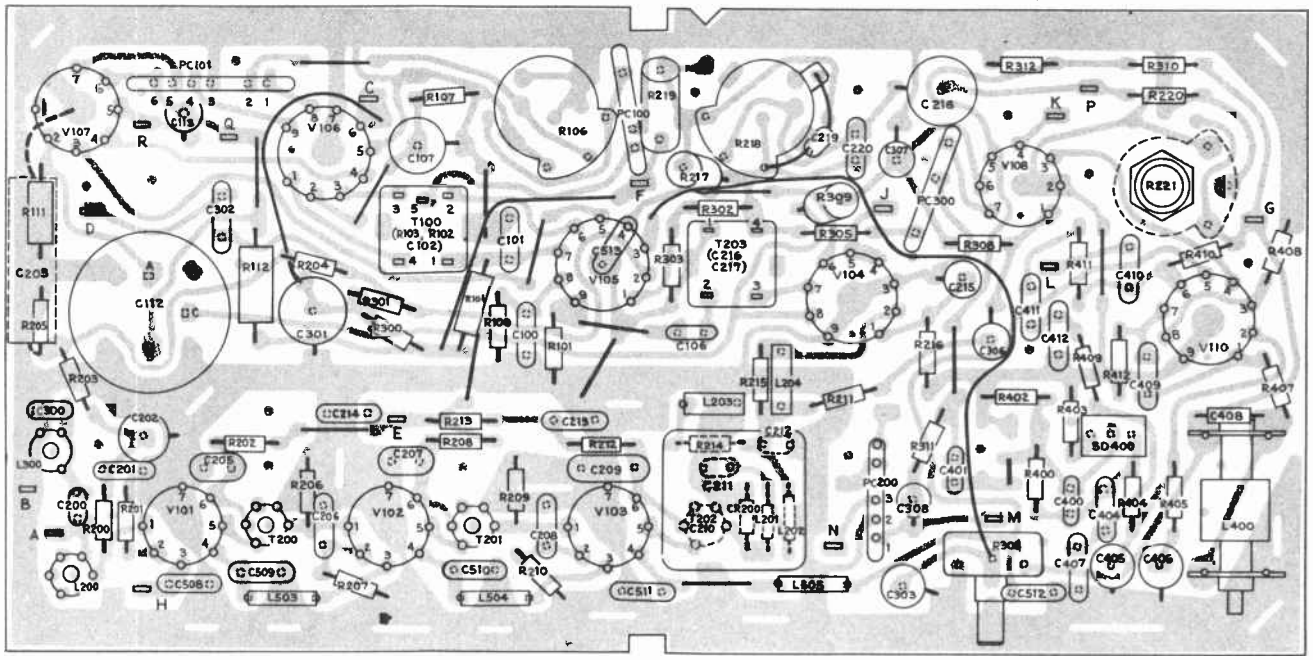

PRINTED BOARD UNIT LAYOUT

The assembly represented above is viewed from the component side of the board and is oriented as it will usually be viewed on the chassis.

The printed wiring, on the reverse side of the board, is presented in a "phantom" view superimposed on the component layout.

SYLVANIA

SYLVANIA ELECTRIC PRODUCTS

CHASSIS: 1-525-1,-2
MODELS: 14P101, 14P201 SERIES

(Circuit diagram on pages 158-159, alignment facts on page 160.)

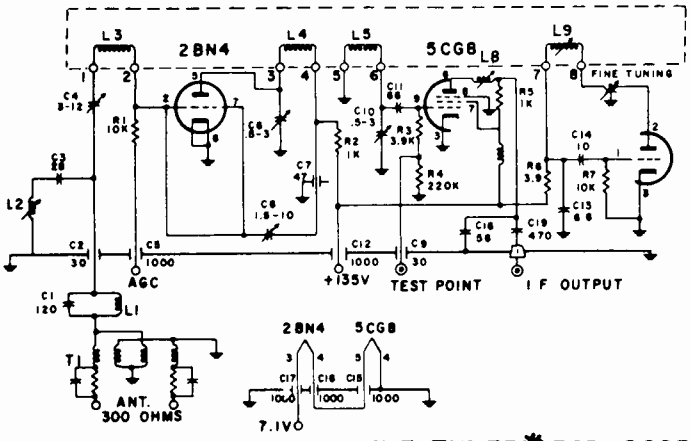

VHF TUNER* 323-0085

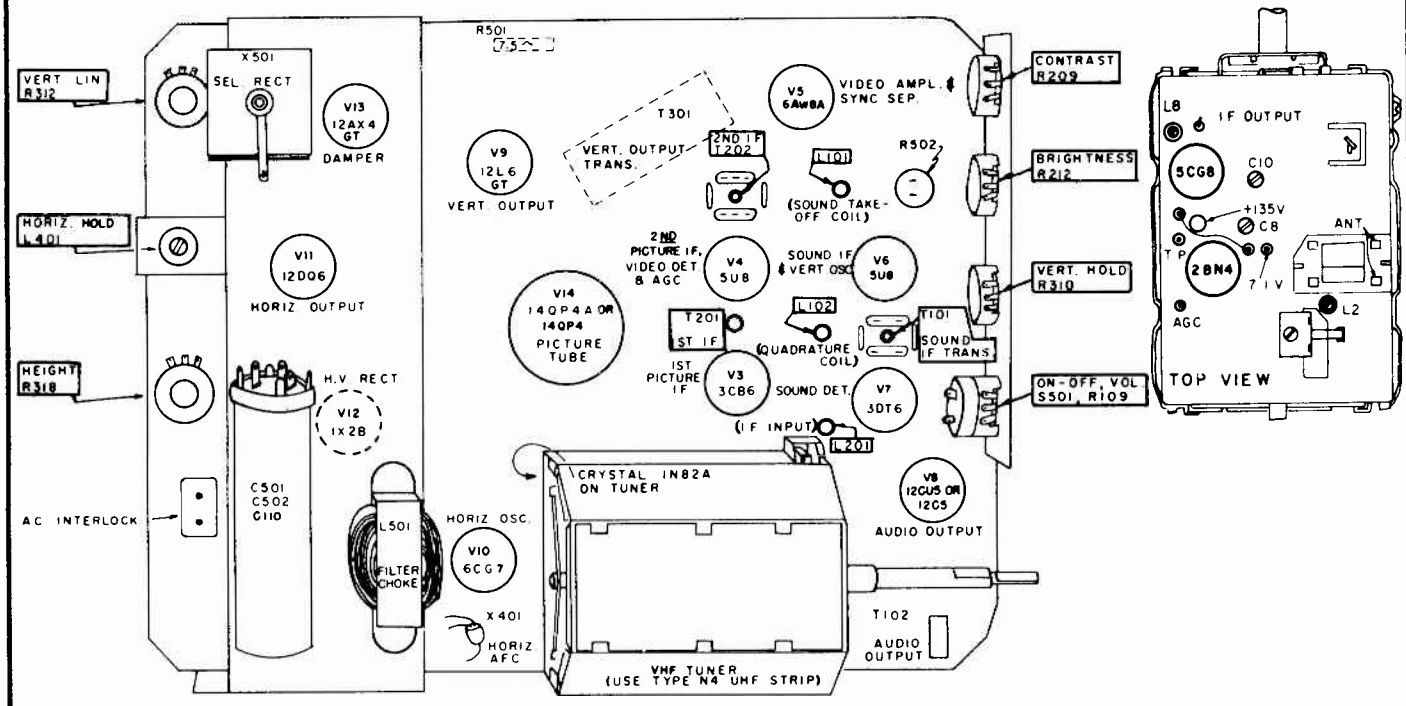

BOTTOM CHASSIS LAYOUT

IDENTIFICATION

1	FRONT VIEW	7	C51
2	TOP VIEW	8	C1
3	2AF4	9	C50
4	4BQ7A	10	I F OUTPUT
5	5AT8	11	L8 IF ALIGN ADJ.
6	VHF TEST POINT	12	OSC. ADJ.

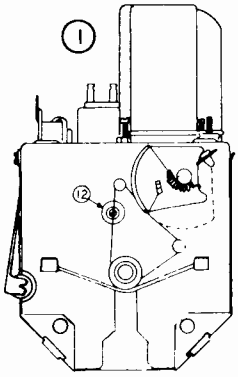

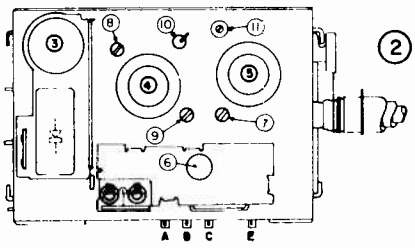

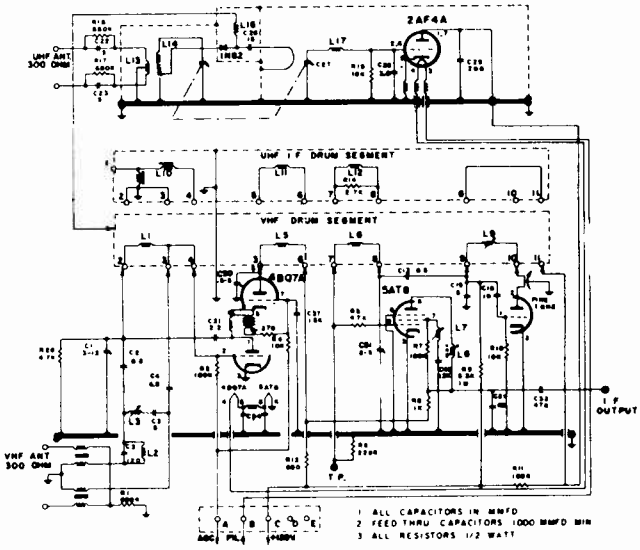

VHF TUNER* 323-0084

VOLUME TV-13, ADDITIONAL 1957 TELEVISION SERVICING INFORMATION

SYLVANIA Chassis 1-525-1, -2, Models 14P101, 14P201, Schematic Diagram

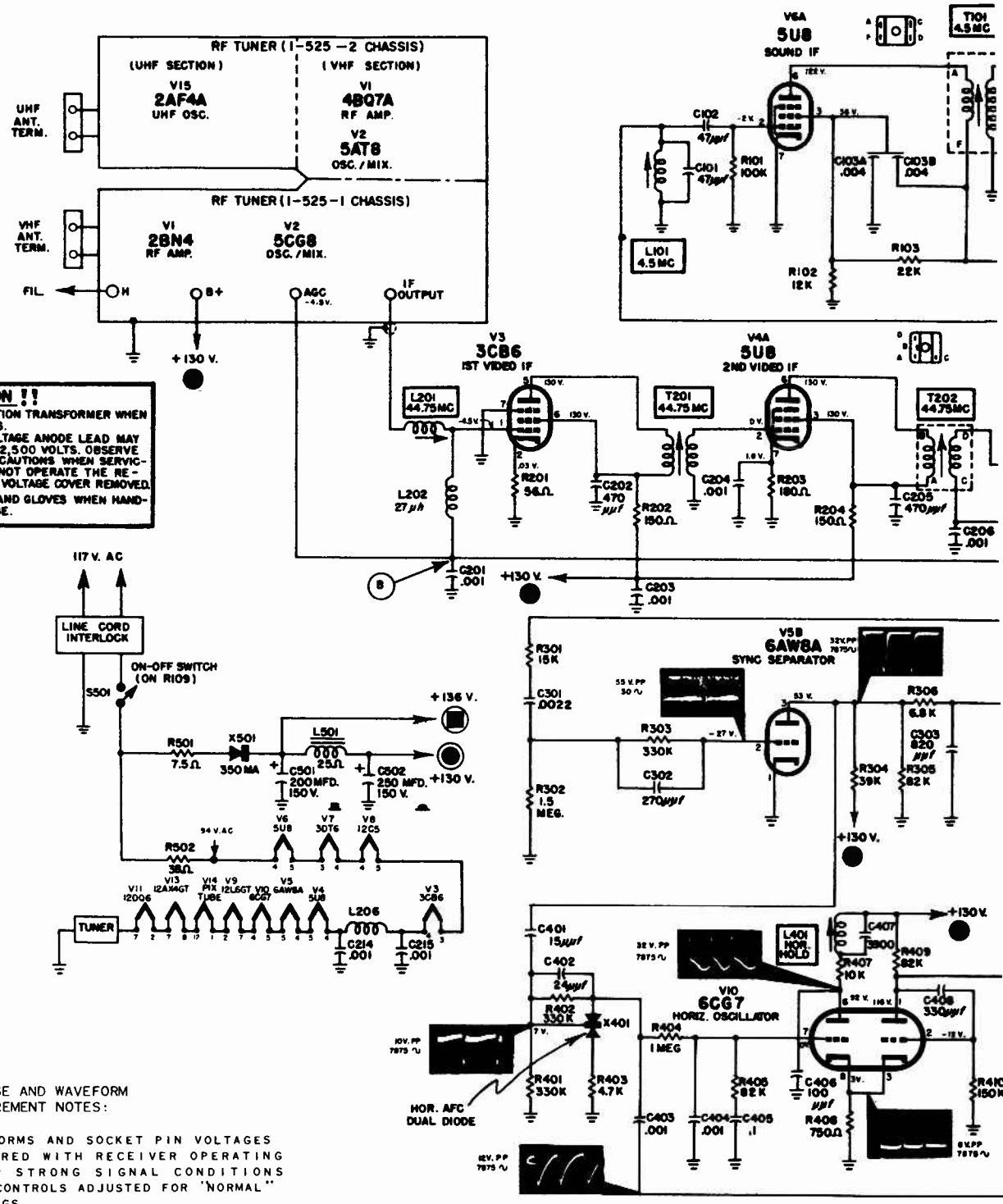

CAUTION !!

USE POWER LINE ISOLATION TRANSFORMER WHEN SERVICING THE CHASSIS.
PICTURE TUBE HIGH VOLTAGE ANODE LEAD MAY HAVE A POTENTIAL OF 12,500 VOLTS. OBSERVE ALL HIGH VOLTAGE PRECAUTIONS WHEN SERVICING THE CHASSIS. DO NOT OPERATE THE RECEIVER WITH THE HIGH VOLTAGE COVER REMOVED.
USE SAFETY GOGGLES AND GLOVES WHEN HANDLING THE PICTURE TUBE.

VOLTAGE AND WAVEFORM MEASUREMENT NOTES:

1. WAVEFORMS AND SOCKET PIN VOLTAGES MEASURED WITH RECEIVER OPERATING UNDER STRONG SIGNAL CONDITIONS WITH CONTROLS ADJUSTED FOR "NORMAL" SETTINGS.
2. SOCKET PIN VOLTAGES MEASURED WITH A VACUUM TUBE VOLTMETER.
3. VOLTAGES ± 20% OF THOSE SHOWN ARE NORMAL.
4. MEASUREMENTS WERE MADE WITH REFERENCE TO CHASSIS AND ARE POSITIVE UNLESS OTHERWISE INDICATED.
5. AC POWER SOURCE 117V. 60 CYCLE LINE.
6. THE TERMS "30~" OR "7875~" REFER TO SCOPE SWEEP FREQUENCY USED.

GENERAL SCHEMATIC NOTES:

1. ARROWS ON POTENTIOMETERS INDICATE CLOCKWISE ROTATION.
2. ENCIRCLED LETTERS ARE REFERRED TO IN ALIGNMENT PROCEDURES.
3. VOLTAGE SOURCES ARE INDICATED BY ENCIRCLED SYMBOLS. CORRESPONDING SYMBOLS WITHOUT CIRCLES INDICATE VOLTAGE TIE POINTS.

SYLVANIA Chassis 1-525-1, -2, Models 14P101, 14P201, Schematic Diagram

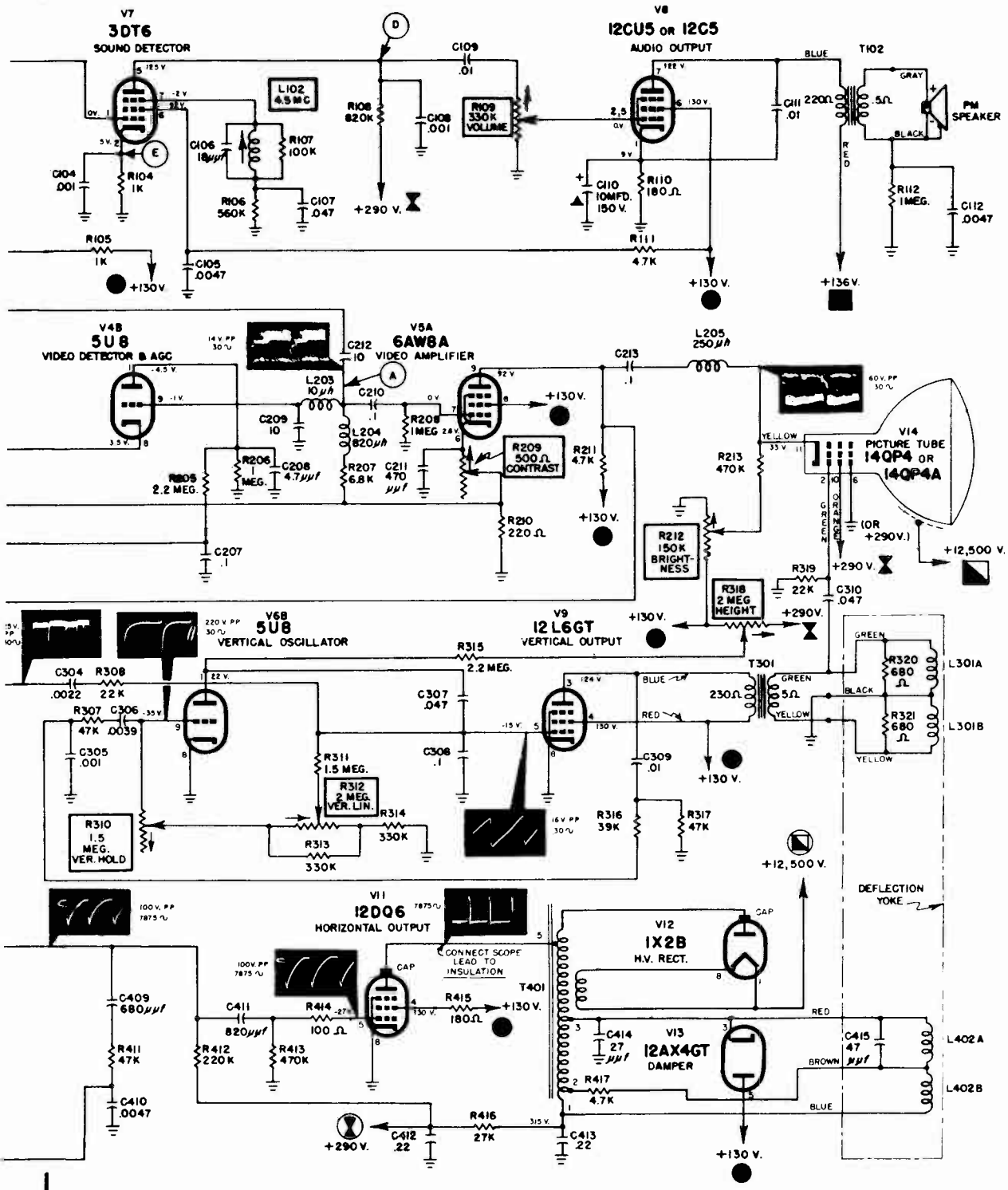

(Video IF and Sound IF Alignment is on page 160, over.)

SYLVANIA Chassis 1-525-1, -2, Models 14P101, 14P201, Alignment Information

VIDEO IF & SOUND IF ALIGNMENT

VIDEO IF ALIGNMENT

STEP	ALIGNMENT SETUP NOTES	TEST EQUIPMENT HOOKUP	ADJUST
1.	Connect 3V. DC source (-) terminal to Point "B" (IF AGC bus) and connect (+) terminal to chassis. Set VHF tuner BETWEEN any two channels. Adjust Contrast control to MINIMUM.	SIGNAL GENERATOR - through .005 mfd. capacitor to RF test point on VHF tuner. Set generator to 44.75 MC. VTVM - DC Probe to Point "A" (Video Detector Load) through isolation network illustrated below. 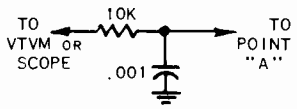	For MAXIMUM at 44.75MC: L8 (VHF Tuner) T202 T201 L201 Adjust in order shown; reduce generator output as required to keep VTVM reading between 1 and 2 volts.
2.	Same as step 1.	SWEEP GENERATOR - through .005 mfd. capacitor to RF test point on VHF tuner. Set generator to 43.5 MC with 10 MC sweep. SIGNAL GENERATOR - loosely couple as a marker to sweep generator lead. OSCILLOSCOPE - across Point "A" (Video Detector Load) through isolation network illustrated in step 1.	L8 (VHF tuner) and L201 for response curve shown: 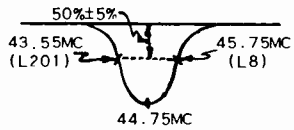 Adjust L201 to position 43.55MC marker; adjust L8 (VHF tuner) to position 45.75 MC.

SOUND IF ALIGNMENT

1.	Adjust Contrast control to MAXIMUM. DETUNE L102 QUADRATURE COIL TO MAXIMUM OUTWARD POSITION. Connect signal generator to Point "A" (L203 and L204 junction) through .005 mfd. capacitor. Set generator to unmodulated 4.5MC (preferably crystal calibrated or controlled). Set VHF tuner BETWEEN any two channels. OR Connect a good antenna to receiver and properly tune in a STRONG station.	VTVM - DC Probe to Point "E" (Pin 2 of 3DT6) through 10K isolation resistor; Ground or "Common" lead to chassis.	For MAXIMUM reading: L101 T101 Adjust signal input as required to keep VTVM reading between 3.5 volts and 5 volts DC.
2.	Leave VHF tuner and Contrast control set as in step 1. Utilize same signal source as in step 1.	VTVM - DC Probe to Point "D" (Pin 5 of 3DT6) through 10K isolation resistor; Ground or "Common" lead to chassis.	L102 for reading of 125 volts (±5 volts) at Point "D" (Pin 5 of 3DT6). Increase signal input to maximum. MAINTAIN POWER LINE VOLTAGE AT 117 VOLTS.
3.	Leave Contrast control set as in step 1. Set VHF tuner BETWEEN any two channels. REMOVE SIGNAL GENERATOR OR ANTENNA CONNECTION, depending on signal source used for steps 1 and 2.	VTVM - Leave connected as in step 2.	"Touch-up" T101 adjustment for MINIMUM reading.
	NOTE: Adjustment of T101 affects current flow in the 3DT6 with no signal input because under this condition, L102 quadrature coil circuit goes into oscillation. The T101 touch-up adjustment is necessary to provide correct frequency and phase relationship between T101 and L102.		

Westinghouse

CHASSIS V-2311, V-2321, and V-2370, V-2380

Chassis V-2311 used in Models H14T170, -A, H14T171, -A, H14T172, -A, H14T198, H14T199,
Chassis V-2321 used in Models H14TU170, -A, H14TU171, -A, H14TU172, -A, H14TU198, H14TU199,
Chassis V-2370 used in Models H17T175, -E, H17T176, -E, H17T177, -E, H17T237C, H17T238C, H17T239C,
Chassis V-2380 used in Models H17TU175, H17TU176, H17TU177, H17TU237A, H17TU238A, H17TU239A

Service material for sets listed above is presented on pages 161 through 167. Chassis V-2311 and V-2321 are alike except that V-2321 contains a factory installed VHF-UHF all channel tuner. They are 14" sets. Chassis V-2370 and V-2380 are basically respectively the same as V-2311 and V-2321, except that a 17" CRT is used, there are a few differences in the Horizontal Sweep section, and some cabinet parts differ.

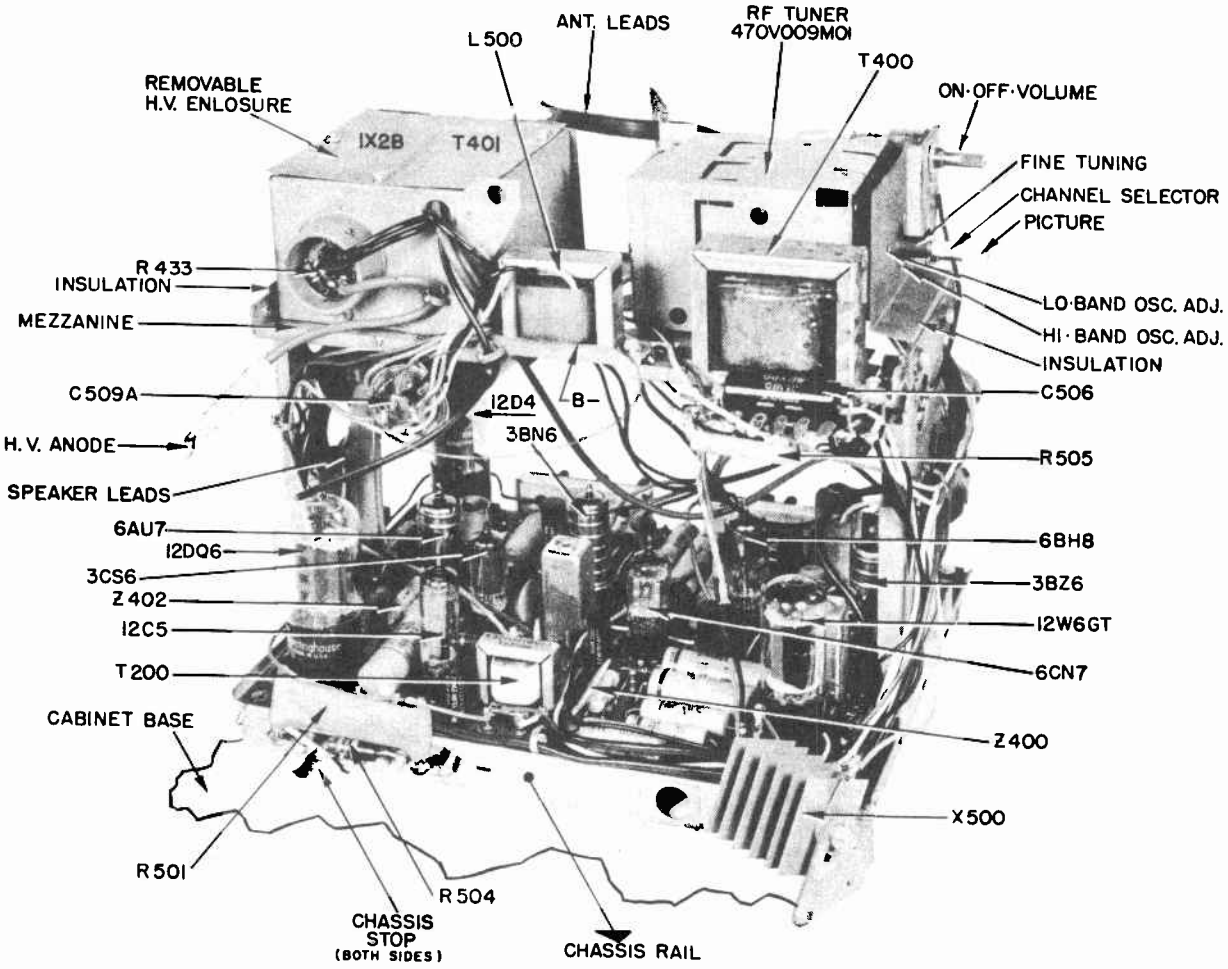

Figure 1 – Front View of Chassis

HORIZONTAL RINGING COIL

The horizontal ringing coil (L400) should be adjusted as follows:

1. Short out the ringing coil with a short jumper wire. This can be done on top of the chassis.

2. Set the horizontal hold control to the middle of its range, and leave it in this position during the steps that follow.

3. Connect a VTVM to point F or to pin #7 of the horizontal multivibrator socket to measure the DC voltage between this point and B minus.

4. With the receiver tuned to a TV station, adjust C416 for **zero** voltage on the meter. If zero voltage can be approached but not quite reached at one extreme of the C416 adjustment, it may be necessary to set the horizontal hold control slightly to one side of mid-position to obtain zero voltage.

5. Remove the jumper from across the ringing coil.

6. Adjust the ringing coil L400 for **zero** voltage on the meter, and check the adjustment by switching to another channel and then back again. The receiver should pull into horizontal synchronization on all channels.

QUIETING CONTROL

The quieting control R200A is located on the back of the receiver. This control, which determines the AM rejection characteristics of the sound system, is normally adjusted during alignment of the sound system as described under SOUND ALIGNMENT PROCEDURE and will not ordinarily require further adjustment. In very weak signal areas, however, a reduction in noise or hiss on the sound may be obtained by slightly re-adjusting the control.

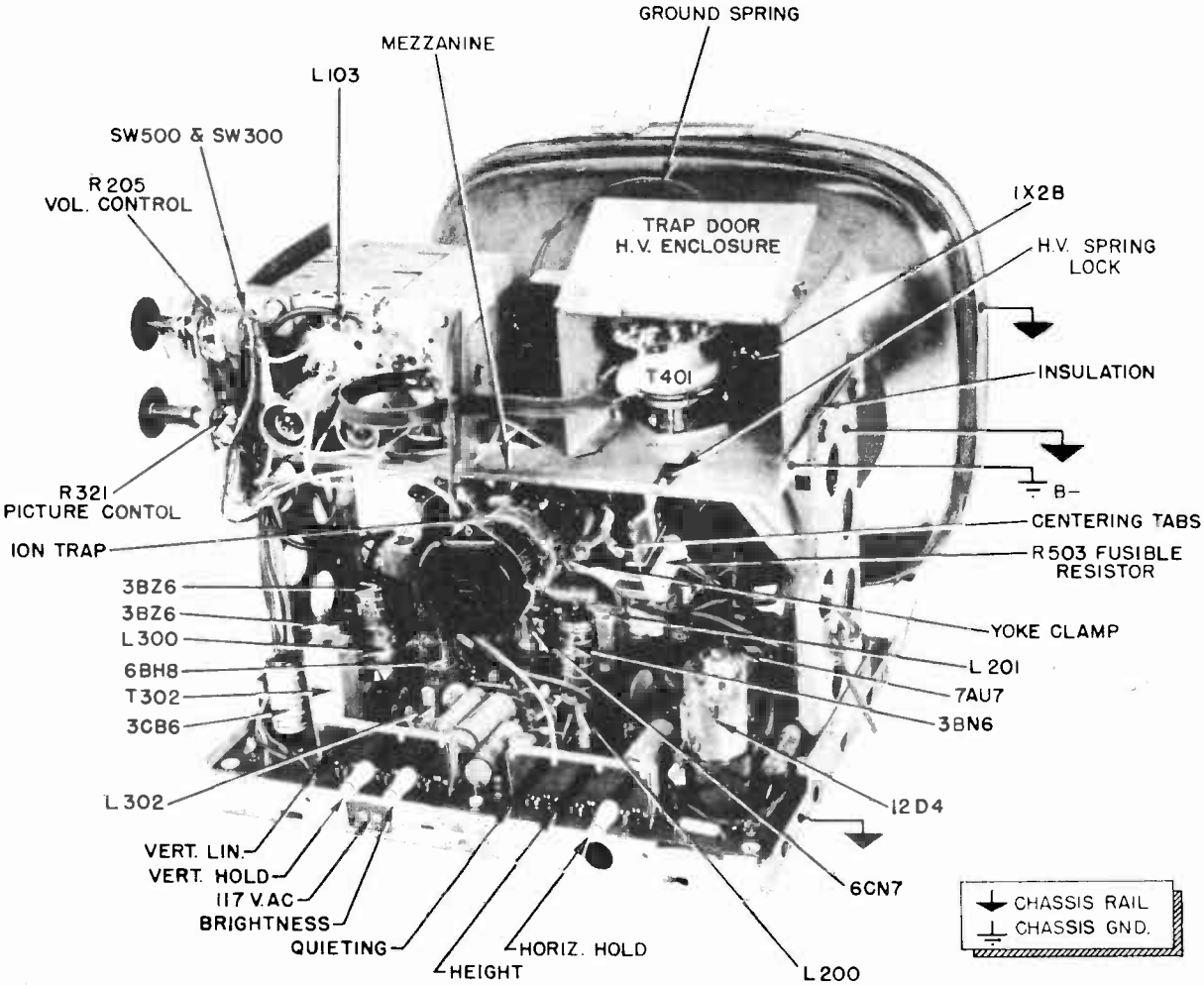

Figure 2 – Rear View of Chassis

WESTINGHOUSE Chassis V-2311, V-2321, and V-2370, V-2380, Continued

CRT Removal (refer to figure 13)*

1. From the bottom of the cabinet, remove the two screws (E) closest to front edge of base, which secure bottom of mask.

2. Insert a screwdriver into the slot at point "F" and pry out the bottom of the mask. Grip mask at bottom corner with free hand and carefully pull mask forward and out of cabinet. *Handle mask carefully so as not to scratch shield.*

3. To remove the CRT, remove the two self tapping screws (G) from the bottom of cabinet.

4. Steady the CRT with one hand and remove the two screws (H) from the top bracket. Carefully slide the CRT out of the cabinet as shown in figure 13.

5. To replace CRT follow the reverse order.

**The yoke, CRT socket, ion trap, and HV lead must be disconnected from rear of receiver.*

CHASSIS REMOVAL FOR SERVICING

1. Remove knobs from side of cabinet.
2. Remove back cover.
3. Remove speaker leads.
4. Loosen bottom speaker retaining nut (A) and remove top speaker retaining nut (B). Slide speaker out from under bottom nut.
5. Remove CRT socket & ion trap.
6. Remove self-tapping screw (C) securing top mezzanine of chassis to nylon grommet on top bracket of cabinet.
7. From bottom of cabinet remove four screws (D) which secure chassis to cabinet.
8. Discharge the HV and remove lead from CRT.
9. Carefully slide chassis out from cabinet until it just clears the cabinet.
10. To service receiver it is recommended that an extension cable and lead be used between CRT socket and HV lead to CRT respectively.

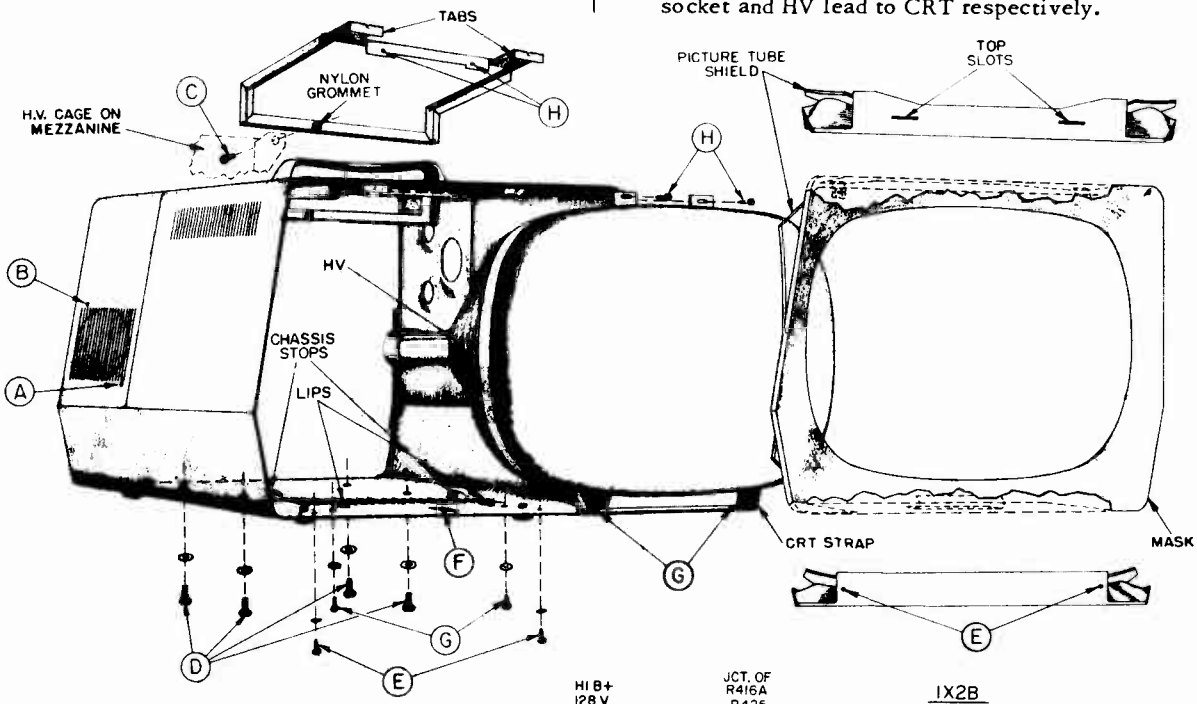

Figure 13 – CRT Removal

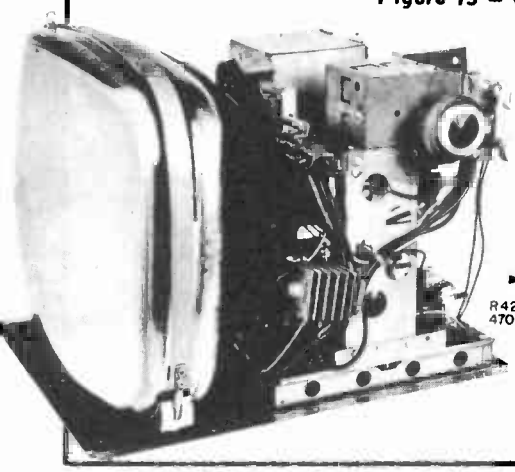

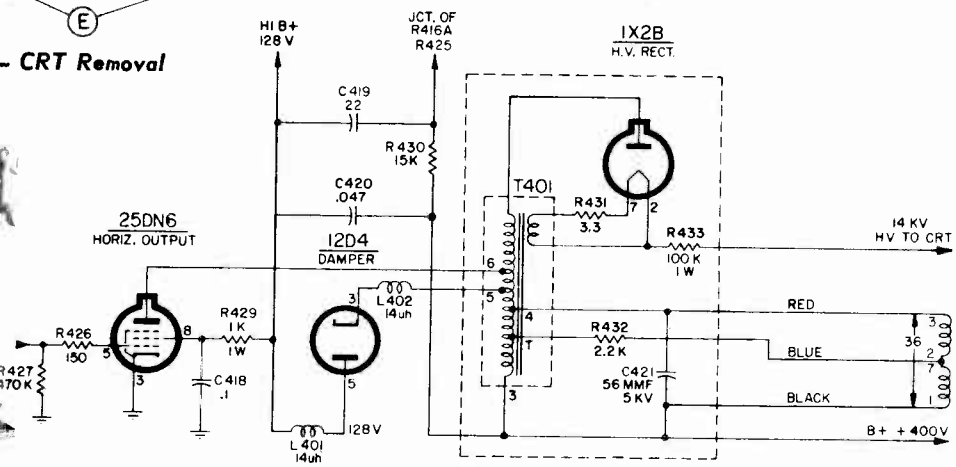

V-2370 & V-2380 Chassis Sweep Section

WESTINGHOUSE Chassis V-2311, V-2321, and V-2370, V-2380, Continued

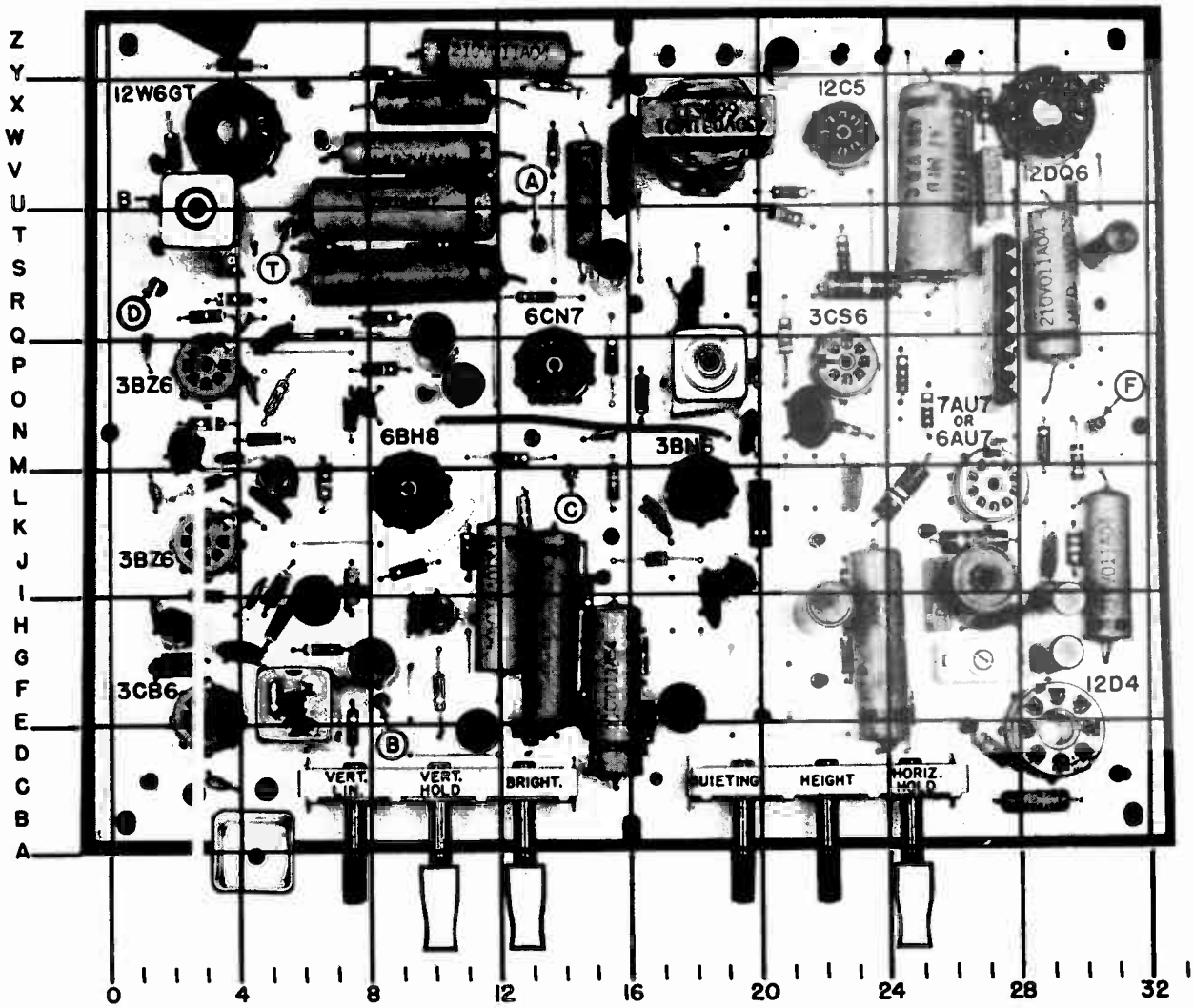

Figure 14 – Printed Circuit Board Component Location

C200	J17	C306	Q4	R306	O5	R331	M7	C418	S29	R419	J30
C201	I18	C308	I4	R307	I3	T300	M2	C419	G24	R420	M30
C202	K17	C309	F2	R308	L3	T301	H2	C420	I22	R421	K26
C203	N20	C311	G4	R309	I5	T302	E6	C426	P20	R422	N29
C204	N15	C312	S9	R310	G2	Z300	U8	C427	R17	R423	E25
C205	S15	C313	F8	R311	H5	Crystal		L400	I27	R424A	C25
C206	Y21	C314	H9	R312	I7	detector	F5	L401	B29	R425	L24
L200	I19	C315	O8	R313	G7	C400	N21	R400	R20	R426	U30
L201	O18	C316	I12	R314	J9	C401	V25	R401	Q21	R427	S30
R200A	C19	C317	G14	R315	N7	C402	Y16	R402	P25	R428	O26
R201	L20	C318	L23	R316	Q8	C403	X11	R403	S23	R429	X27
R202	O16	C319	Q10	R317	E17	C404	U15	R404	U21	R430	G22
R203	M13	L300	M5	R318	E15	C405	Z12	R405	R23	R439	E7
R204	P15	L301	I7	R319	G17	C406	V10	R406B	C10	Z400	V16
R206	U21	L302	H10	R320	F10	C407	F16	R407	R13	Z402	Q29
R207	U18	L303	E12	R322	E13	C408	J29	R408	X14	C502	C3
T200	W18	L304	E18	R323	M12	C409	U27	R409	W14	C503	I2
C300	U9	L305	O11	R324	J11	C410	I29	R410	Y4	C504	L2
C301	S10	R300	T7	R325	Q7	C411	G29	R411	Y8	C505	Q1
C302	O4	R301	T11	R326	P8	C412	J31	R412B	C8		
C303	K4	R302	R4	R327	K13	C413	I26	R413	N23		
C304	L5	R303	Q3	R328	I22	C414	H27	R414	W3		
C305	M4	R304	N3	R329	I15	C415	T31	R415	R18		
		R305	N5	R330B	C10	C416	G27	R416A	C22		

WESTINGHOUSE Chassis V-2311, V-2321, and V-2370, V-2380, Continued

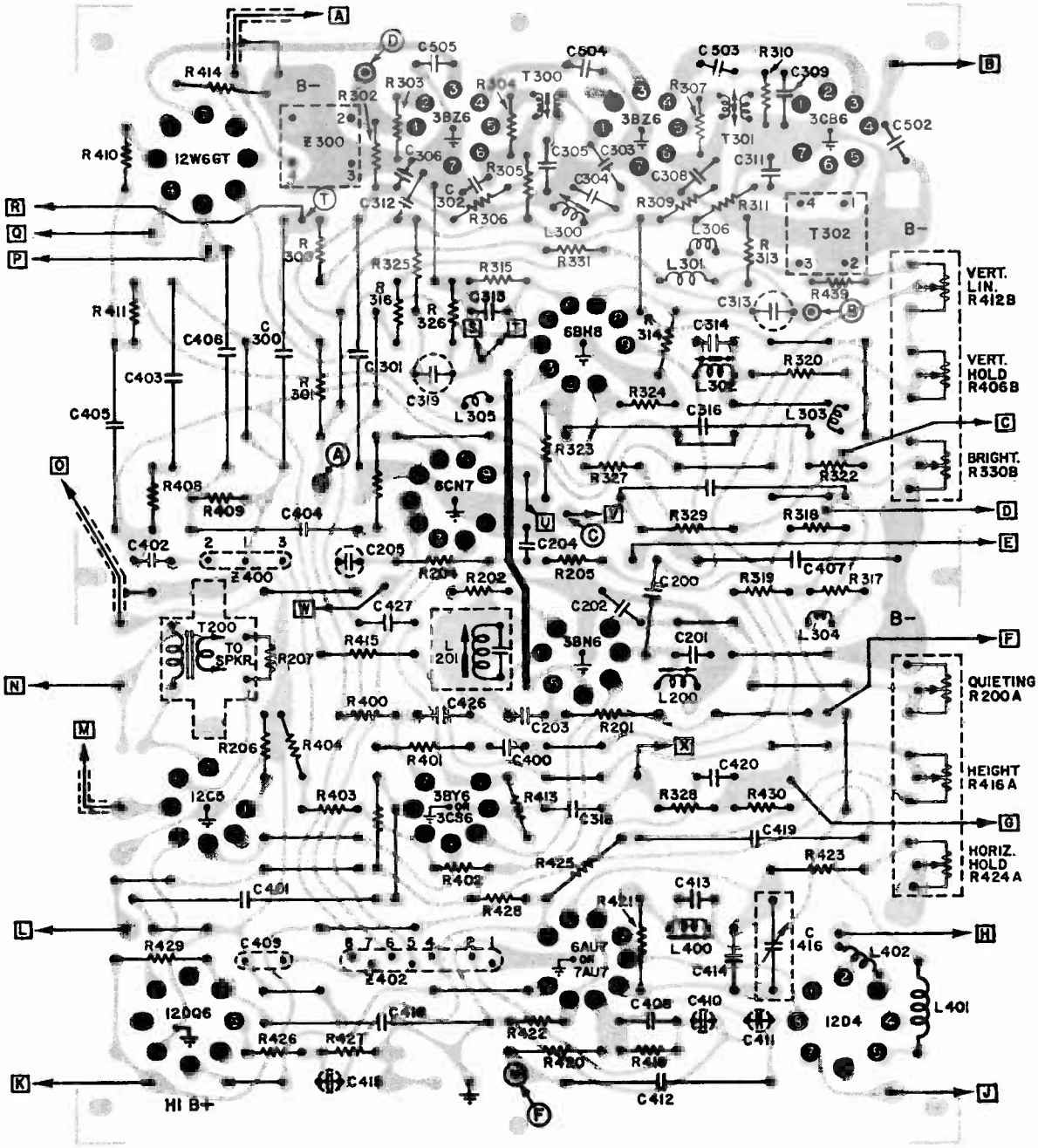

Figure 15 – Bottom View of Printed Board Showing Top Components Symbolically

(This is exact for V-2311, V-2321; the board for V-2370, V-2380. differs somewhat.)

A. Tuner IF output
B. Brown wire – heater to tuner
C. Green wire to arm of picture control
D. Blue wire to top of picture control
E. Yellow wire to Vertical Output Transformer
F. Gray wire to CRT pin #6 (low B +)
G. Black wire to Flyback pin #3 (B + boost)
H. Red wire to Flyback pin #5
J. Brown wire – heater to R501
K. Red-White wire to C509A (high B +)
L. Orange wire to C509A (low B +)
M. To arm of volume control
N. Orange-White wire to C510A (audio B +)
O. To top of volume control
P. Blue wire to Vertical Output Transformer
Q. Red-Yellow wire to Vertical Output Transformer
R. White wire – AGC to tuner
S. Green wire to CRT pin #2
T. Green wire to SW300
U. Black wire to CRT pin #1
V. Brown wire to CRT pin #11
W. Black wire to B-
X. Red wire to CRT pin #10

WESTINGHOUSE Chassis V-2311, V-2321, and V-2370, V-2380, Continued

TP-F is a V.T.V.M. test point used to obtain zero voltage when adjusting ringing coil and horizontal M.V. trimmer.

The exposed socket terminals may be used to check filament continuity and the various voltages all without removing the chassis from the cabinet.

The test points are designated as TP-A, TP-B, etc., while the exposed tube socket terminals are not designated.

TP-A is an AGC test point
TP-B is a video test point for signal tracing or scope connection

Test points in the form of terminals projecting from the top of the printed boards and exposed terminals at some of the tube sockets are found on the V-2311 and V-2370 Westinghouse Television Chassis. These points are for the purpose of expediting service work and reduce the number of occasions to remove the chassis from the cabinet.

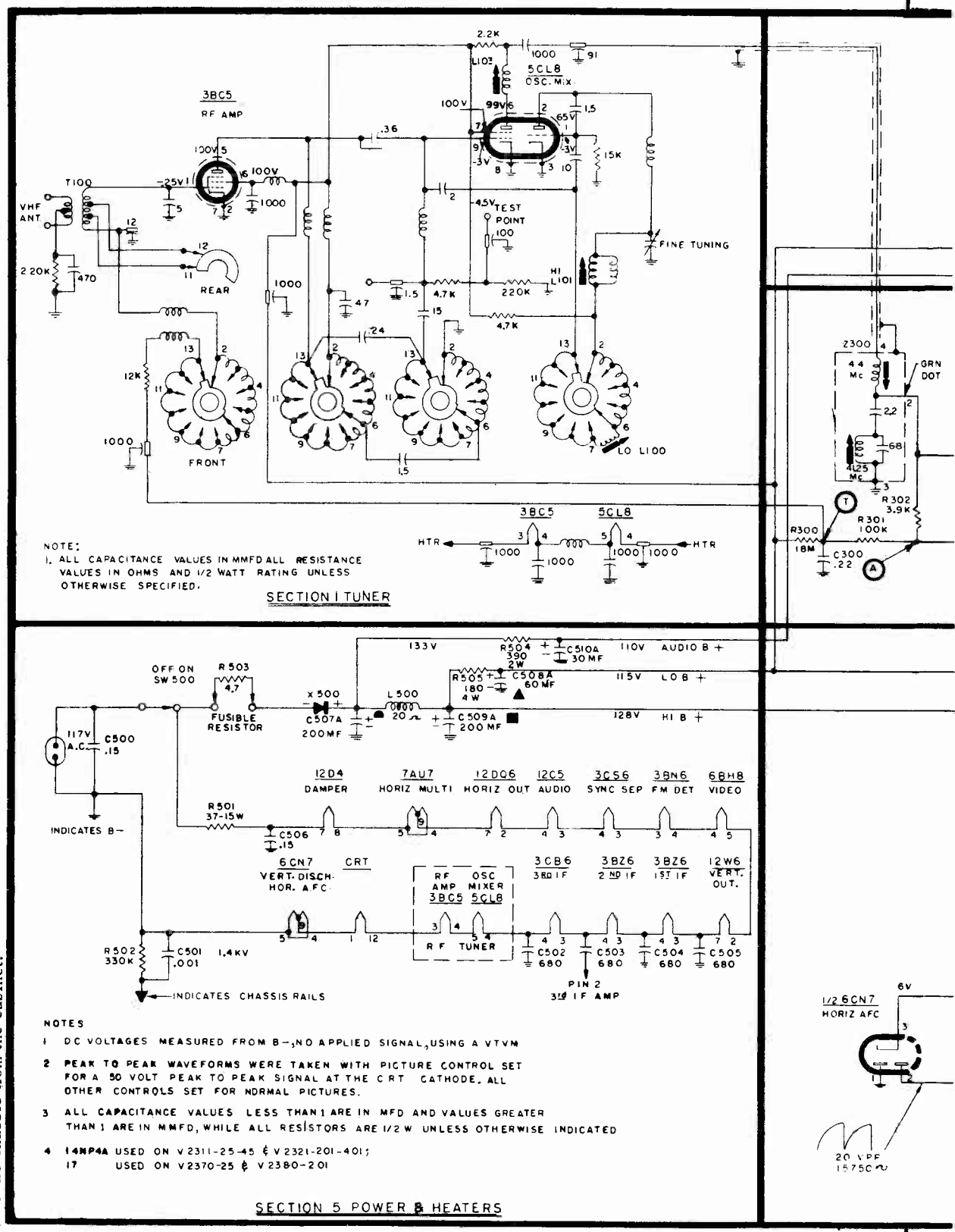

Figure 17 – Schematic Diagram for Chassis V-2311, V-2321, V-2370 & V-2380

WESTINGHOUSE Chassis V-2311, V-2321, V-2370, V-2380, Schematic Diagram

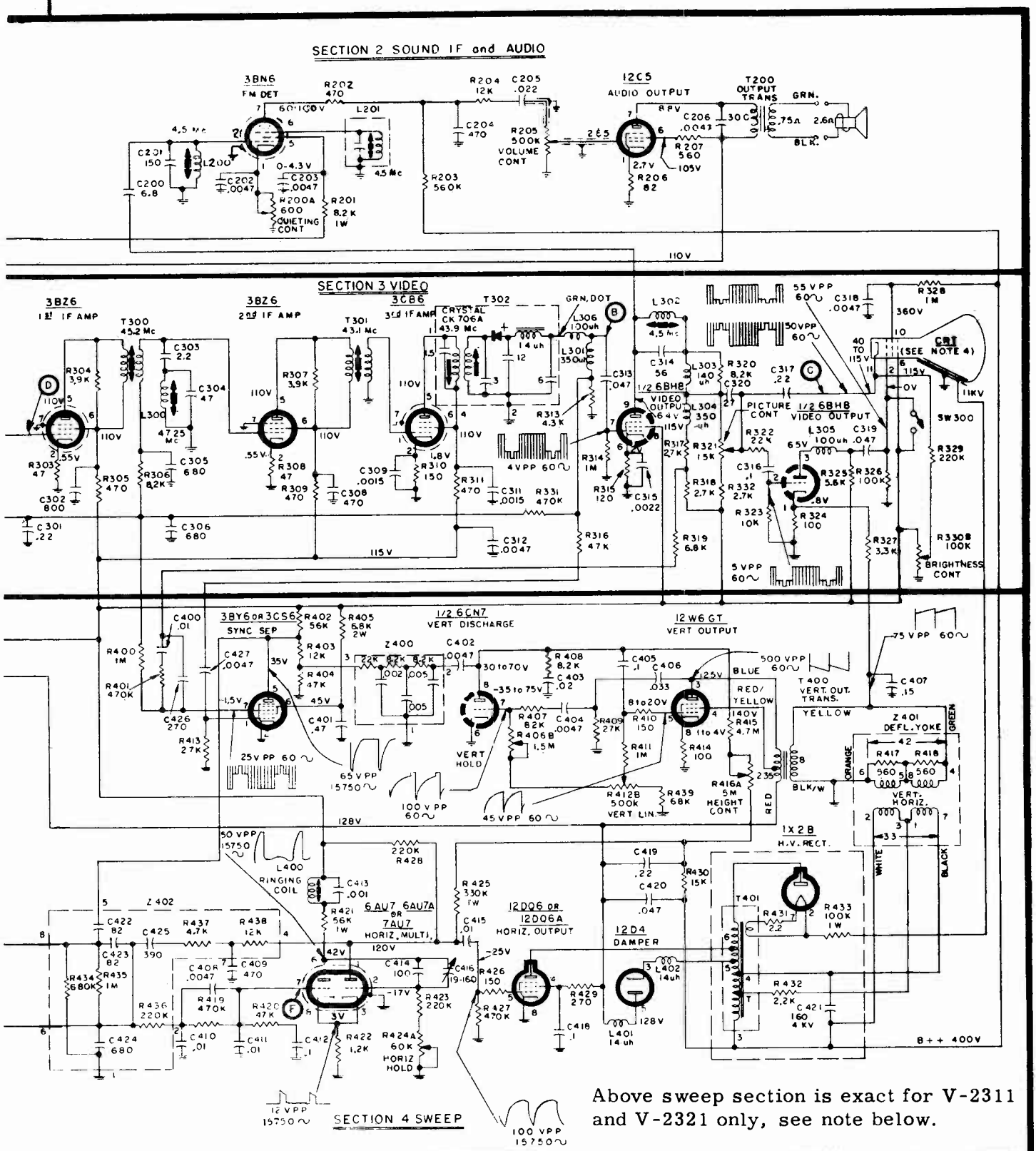

Above sweep section is exact for V-2311 and V-2321 only, see note below.

(See page 163 for exact sweep section schematic applicable to V-2370 and V-2380)

Westinghouse

CHASSIS ASSEMBLY V-2346, V-2356 and V-2347, V-2357

Chassis V-2346 uses a 21" picture tube while chassis V-2347 uses a 24" tube. Chassis V-2356 and V-2357 are respectively the same as chassis V-2346 and V-2347, except that they use VHF-UHF all-channel tuners. Service material on these sets is presented on pages 168 through 174. These chassis are used in a great many models, and in production had some minor modifications and employed several different types of tuners. A complete list of models is given below. The incorporation of the letter "U" in the model number signifies the use of a VHF-UHF type tuner.

H21K111A	H21K194N	H21KU114A	H21KUR189	H21TR184+	H21TUR182D
H21K112A	H21KR113A	H21KU114B	H21KUR189C	H21TR188	H21TUR183
H21K112B	H21KR113F	H21KU115	H21KUR189D	H21TR188+	H21TUR183A
H21K113A	H21KR114A	H21KU115A	H21KUR190	H21TR189C	H21TUR183D
H21K113B	H21KR114F	H21KU116	H21KUR190D	H21TRU181A	H21TUR184A
H21K114B	H21KR115A	H21KU116A	H21KUR191	through -	H21TUR184D
H21K115	H21KR116A	H21KU185A	H21KUR191D	H21TRU189A	H21TUR188A
H21K116	H21KR188+	H21KU185B	H21T101B	H21TU101A	H21TUR189A
H21K185+	H21KR189+	H21KU186+	H21T107A	H21TU107A	H24K126B
H21K186+	H21KR190+	H21KU187	H21T107B	H21TU107B	H24K126E
H21K187A	H21KR191+	H21KU187A	H21T108A	H21TU108A	H24K127B
H21K187B	H21KRU190	H21KU187B	H21T108B	H21TU108B	H24K128B
H21K187L	H21KRU191	H21KU194	H21T180+	H21TU180	H24KR126A
H21K188	H21KU111A	H21KU194A	H21T181A	H21TU180A	H24KR126F
H21K189	H21KU112A	H21KU194B	H21T185	H21TU180B	H24KR127F
H21K194	H21KU112B	H21KUR188	H21TR181+	H21TUR181A	H24KU126B
H21K194C	H21KU113A	H21KUR188C	H21TR182+	H21TUR181D	H24KU127B
H21K194L	H21KU113B	H21KUR188D	H21TR183+	H21TUR182A	H24KU128B

IF ALIGNMENT

A suggested alignment procedure is given in the following steps:

1. Connect a V.T.V.M. (5 volt range) to point "B" as shown on the schematic diagram or printed board layout Fig. 12, and set to read a negative voltage.

2. Connect the RF generator, capable of providing frequencies ranging from 40 to 50 mc. unmodulated, to point "D" as shown on Fig. 12. For suggested RF generator coupling and termination see Fig. 1.

3. Apply -3 and -.5 volts bias to points "A" and "T" as shown in Fig. 12. A simple bias source is shown in Fig. 2.

4. Adjust L300, T301 and T300 as given in the following chart.

The video IF system is stagger-tuned to obtain the required bandwidth.

Signal Gen. Frequency	*Connect Gen. To Point*	*Adjust*	*V.T.V.M. Output*
43.1 mc	"D" Fig. 12.	T301	Maximum
47.25 mc	"D" Fig. 12	L300	Minimum
45.2 mc	"D" Fig. 12	T300	Maximum

NOTE: To adjust the slugs in the IF transformer Z300, T300, T301 and T302, a special tool is required. This tool must fit into the 3/32 hex type hole in the slug. An incorrectly designed tool will cause chipping of the slug. A suitable tool is shown in Fig. 3.

5. Remove the V.T.V.M. and connect the vertical input of the oscilloscope to point "B" See Fig. 12, using the isolation network as shown in Fig. 5.

6. Remove the RF signal generator from point "D".

WESTINGHOUSE Chassis V-2346, V-2347, V-2356, V-2357, Alignment Continued

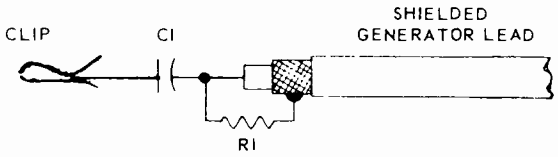

CI = .001 MFD

RI = DEPENDS UPON GEN. OUTPUT IMPEDANCE 52 Ω - 72 Ω etc.

Figure 1 – RF Generator Coupling

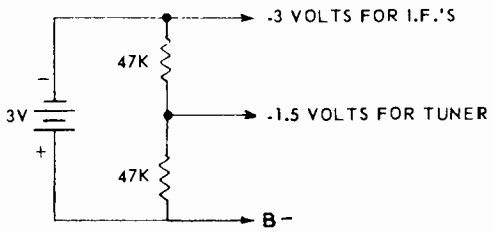

Figure 2 – Bias Supply

7. Couple the marker generator output to the IF sweep generator output so that the two signals are applied together to the points specified in the steps that follow. Some sweep generators have facilities for connecting the marker output directly into the sweep generator. With other sweep generators, the marker can be coupled to the sweep generator by wrapping a few turns of insulated wire around the center conductor of the sweep generator output cable and connecting the marker generator to this wire. The loose coupling obtained in this manner is desirable because excessive marker signal injection will distort the response curve.

8. Connect the IF sweep generator to point "D" as shown on Fig. 12. The observed wave form should be as shown in Fig. 6 with markers as shown. Adjust T302 bottom (PRI) and top (SEC) for desired response curve with markers shown in Fig. 6. Slight readjustments of T300 – T301 and L300 maybe necessary to achieve desired IF response curve shown.

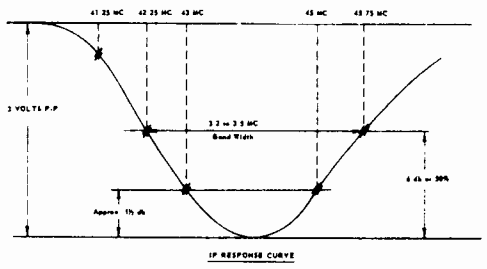

Figure 6 – I.F. Response Curve

Figure 3 – Alignment Tool

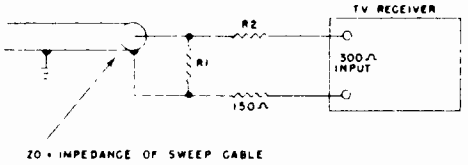

ZO	R1	R2
50 Ω	56 Ω	120 Ω
72 Ω	82 Ω	110 Ω

Figure 4 – Impedance Matching Network

9. Connect the RF sweep generator output cable to the antenna terminals with the proper impedance matching network. (See Fig. 4)

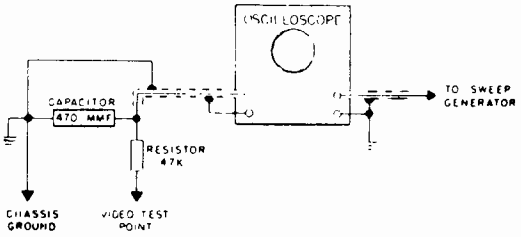

Figure 5 – Oscilloscope Connections

10. Set the channel selector to channel 13 and set the sweep generator to sweep channel 13 frequencies.

11. By adjusting L103 on the tuner for maximum amplitude of the response curve and the bottom adjustment of Z300 to correct the tilt, the curve and marker points should be as shown in Fig. 7.

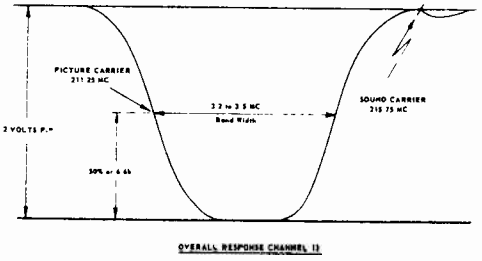

Figure 7 – Overall Response Curve

The bottom adjustment of Z300 is made correctly when the response curve rocks about the center frequency of 213 mc.

The top adjustment of Z300 is the accompanying sound trap (41.25 mc) and should be adjusted to fall as shown in the response curve (Fig. 7) at 215.75 mc. After adjusting the 41.25 mc. trap it may be necessary to retouch the bottom adjustment of Z300.

WESTINGHOUSE Chassis V-2346, V-2347, V-2356, V-2357, Continued

HIGH-FREQUENCY OSCILLATOR ALIGNMENT FOR 475V001M01 TUNER

If the 5CL8 oscillator tube is replaced, the different inter-electrode capacity of the new tube may change the oscillator frequency enough to necessitate re-alignment.

Alignment of the VHF oscillator for the high and low band channels is accomplished from the top of the tuner.

The adjustments are as follows:

1. Rotate the fine tuning control to the middle of its range. The flat of the shaft will be at the 1 o'clock position.

2. Set the channel selector to the highest channel in the high band (7-13) operating in your locality.

SOUND ALIGNMENT PROCEDURE

The sound system can be aligned using either generated signals or a local television signal. Since the latter method does not require signal generating equipment, it will be described.

1. Tune the receiver to a television station and connect an attenuator between the receiver and the antenna so that the strength of the signal can be varied from weak to strong.

2. Set the quieting control (R202) located on the back of the chassis approximately to its mid-position.

3. Apply a **strong** signal to the receiver and adjust the quadrature coil (L202) for maximum program sound. If peaks occur at two different positions that are widely separated, use the one that occurs with the slug farthest counterclockwise. If two peaks occur within a **narrow** range of adjustment, sufficient signal is not being applied to the receiver or the quieting control is not set at the desired position.

4. Adjust the 4.5 mc. IF slug (L201) for maximum program sound. If peaks occur at two different positions of the slug, use the peak that occurs when the slug is farthest counterclockwise. Reduce the signal to its lowest usable level and recheck the adjustments.

3. Using a non-metallic alignment tool (See Fig. 8) peak the hi-band oscillator slug L101 for best picture detail and sound quality.

4. Set the channel selector to the highest channel in the low band (2-6) operating in your locality.

5. Peak the low band adjustment slug (L100) for best picture detail and sound quality.

6. Check the previously made adjustments and if tuning has changed, repeat the above procedure.

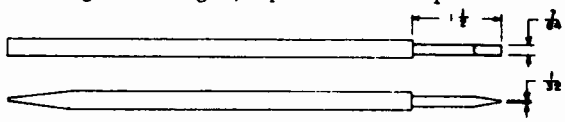

Figure 8 – Alignment Tool

7. Apply a very weak signal that allows noise to be heard and adjust the quieting control (R202) for minimum noise. The position at which the noise is minimized depends on the strength of the signal; therefore, the weakest usable station in the area should be used for this adjustment. This control determines the AM rejection characteristics of the sound system, and its correct setting is normally about mid-position. **Do not leave the quieting control set at its maximum counterclockwise position.**

CRT REPLACEMENT

The following steps are used as a guide in removing the Cathode Ray tube:

1. Remove the television chassis from the cabinet.

2. Remove the CRT socket.

3. Remove the **ion** trap.

4. Loosen and remove the aluminum clamp ring securing the yoke cover.

5. Slip the yoke assembly from the CRT neck.

6. Loosen and remove from each channel stabilizing bar one 3/8" nut and lock washer allowing each stabilizing bar to be free from the CRT mounting strap assembly.

7. Remove the six (three on each side) 1/4" self tapping screws from the chassis side rails securing the CRT cradle.

NOTE: Upon replacement of new CRT, do not tighten the yoke clamp too tight but make sure the yoke is up well against the CRT flare.

600 MA. SERIES TYPE TUBES

The new type 600 ma. tubes used in these chassis are controlled heater type tubes. The value of the heater resistance varies from a low value to a higher value while the tube approaches its normal operating temperature. For example, the 3CB6 heater resistance when cold is approximately .75 ohms and increases to about 5.25 ohms when hot.

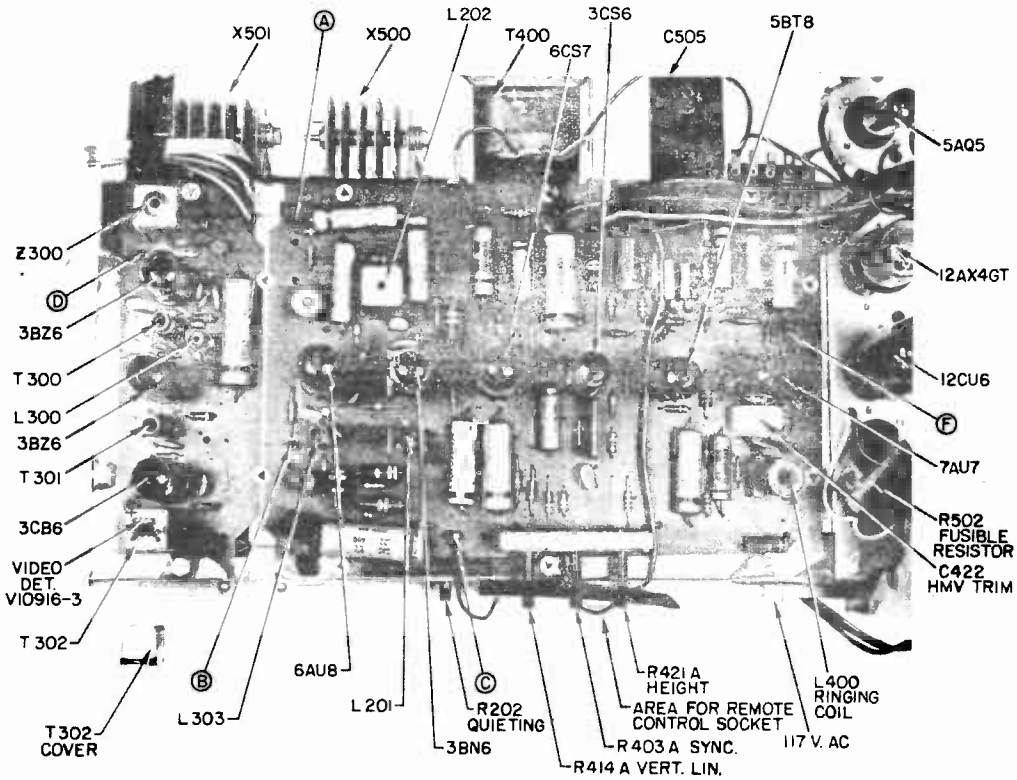

I.F. & SWEEP COMPONENTS (TOP VIEW)

Figure 12

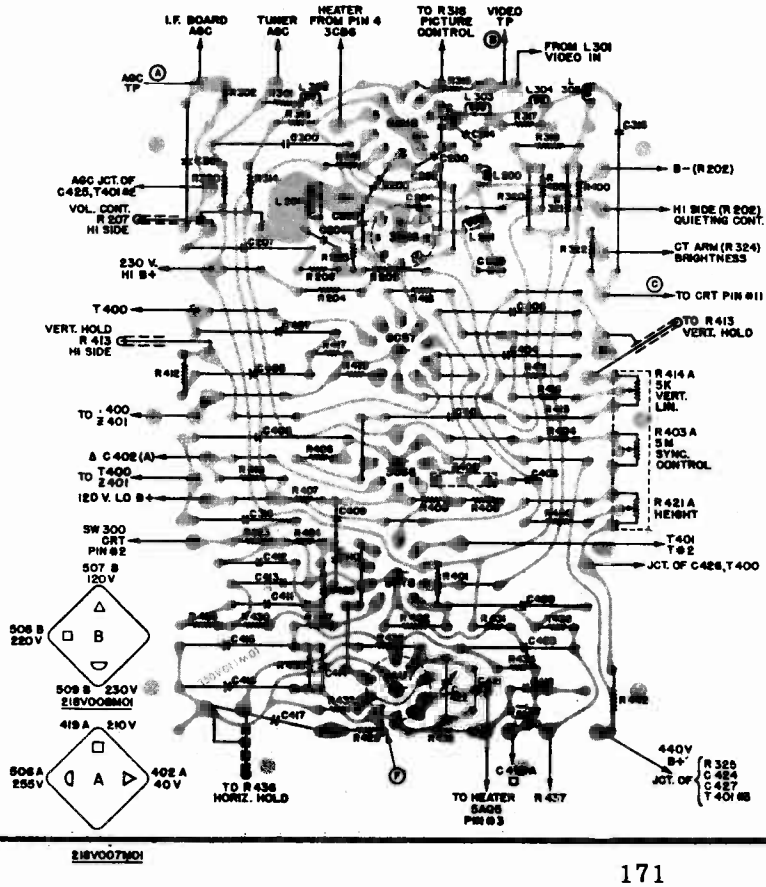

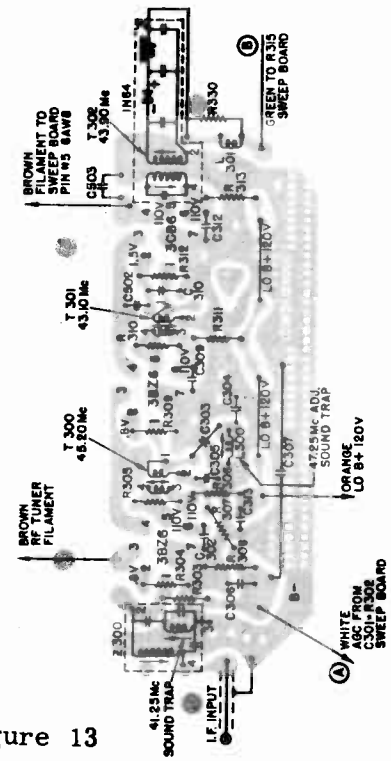

Figure 13

Bottom View of Printed Board Showing Top Components Symbolically

WESTINGHOUSE
Chassis V-2346, V-2356, and V-2347, V-2357.

PRODUCTION CHANGES

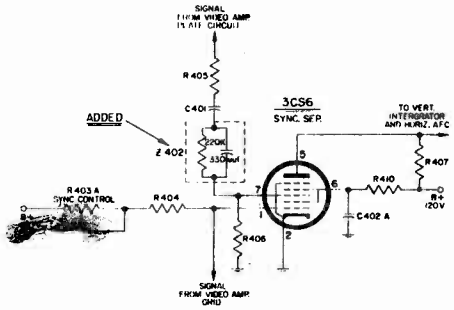

FIGURE 4. SYNC SEPARATOR CIRCUIT

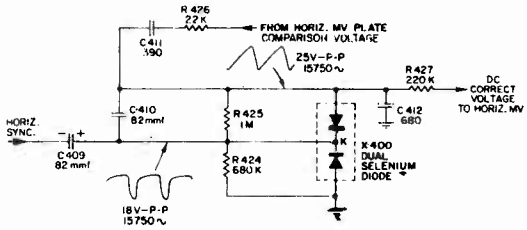

FIGURE 5. AFC using Selenium diode

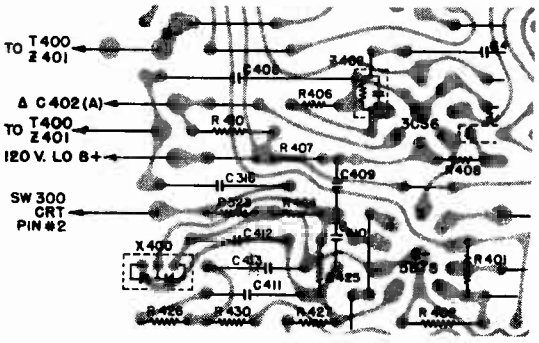

FIGURE 6 CHASSIS – BOTTOM VIEW

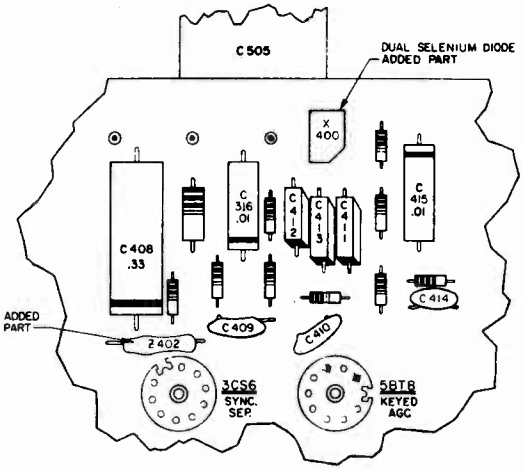

FIGURE 7 CHASSIS TOP VIEW

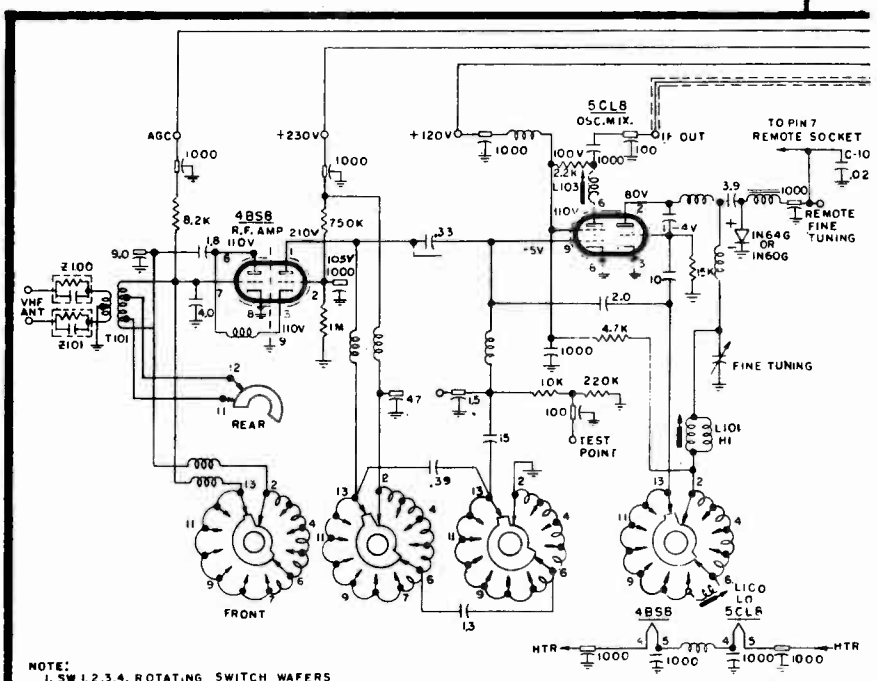

SECTION 1 TUNER

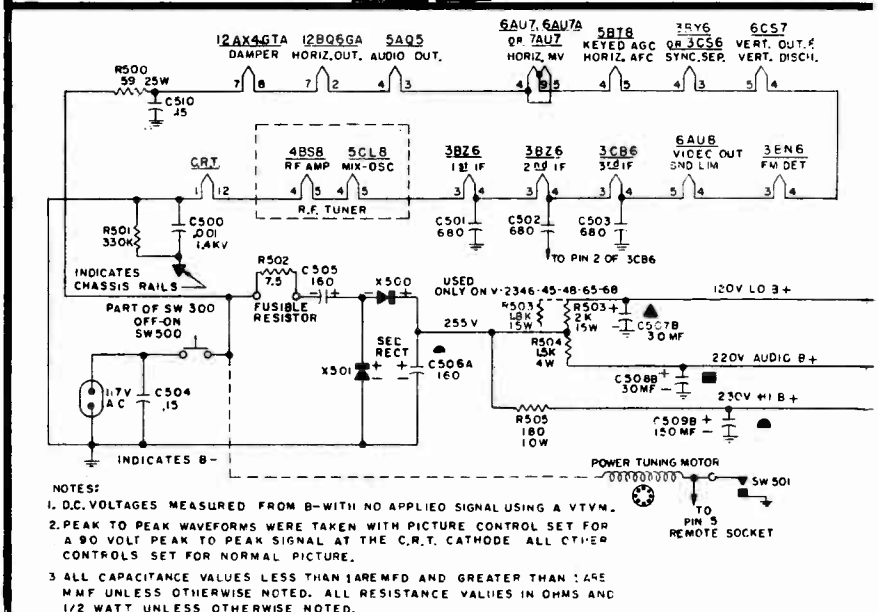

SECTION 5 POWER & HEATERS

SYNC COUPLING NETWORK

In later production a combination capacitor-resistor network Z402 (capacitor 330 mmf and resistor 220K ½ Watt) has been added as shown in figures 4, 6, and 7. This network provides improved horizontal and vertical sync stability.

ANTENNA ISOLATION NETWORK

In later production the antenna isolation network for the VHF tuner sections of the 475V007M01 and 475V007M03 combination VHF-UHF tuners is a capacitor-resistor network (part number 219V004M02) in each leg of the Antenna input to the tuner.

Schematic Diagram For V-2346, V-2356, V-2347 & V-2357 Chassis Assembly

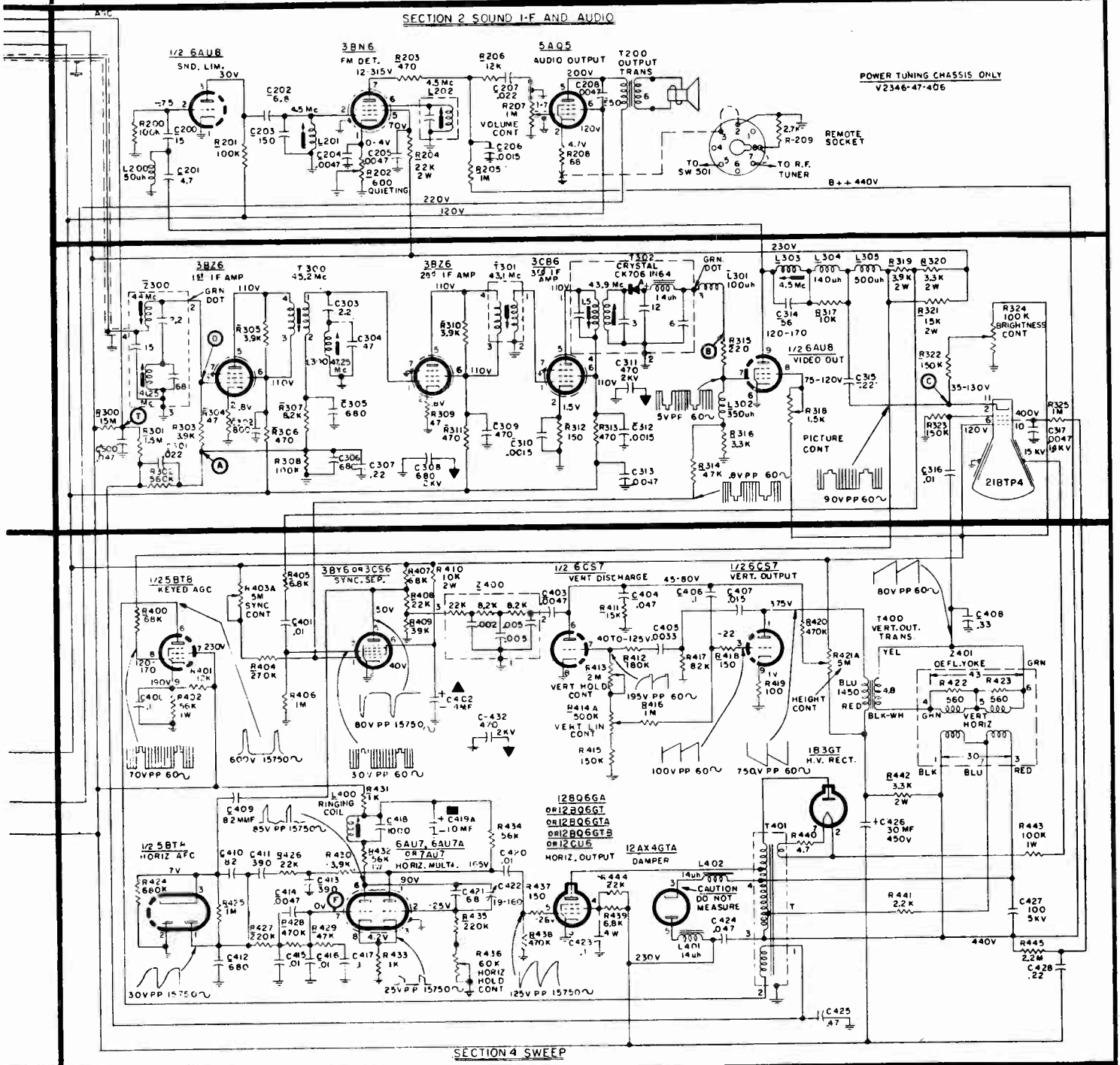

AFC USING DUAL SELENIUM DIODE

All television receivers using the V-2346-81, -85, -88, -89 and V-2356-805 and -806 chassis will have a dual selenium diode in the AFC control circuit. The printed board has been changed, as shown in figures 6 and 7 and the dual selenium diode, X400, is mounted directly to the printed board.

The basic circuit operation is the same as when a dual diode was used in the horizontal AFC circuit. The diode compares the received horizontal sync pulse with a portion of the horizontal multivibrator signal and developes a control voltage for the horizontal multivibrator.

PUSH-PUSH ON-OFF-VOLUME CONTROL SWITCH

SW500 is a push-push type on-off-volume control switch. This new switch provides the user with the added convenience of being able to maintain the volume level at a favorite setting. This is possible since the volume control need not be turned to switch the receiver on or off.

A new CRT, 21BTP4, is used in later production of the V-2346 chassis. This CRT is directly interchangeable with the 21ALP4A/B. This new CRT has an extended "dag" area, hence reducing radiation.

WESTINGHOUSE Chassis V-2346, V-2347, etc. *IF and Sweep Board Component Location*

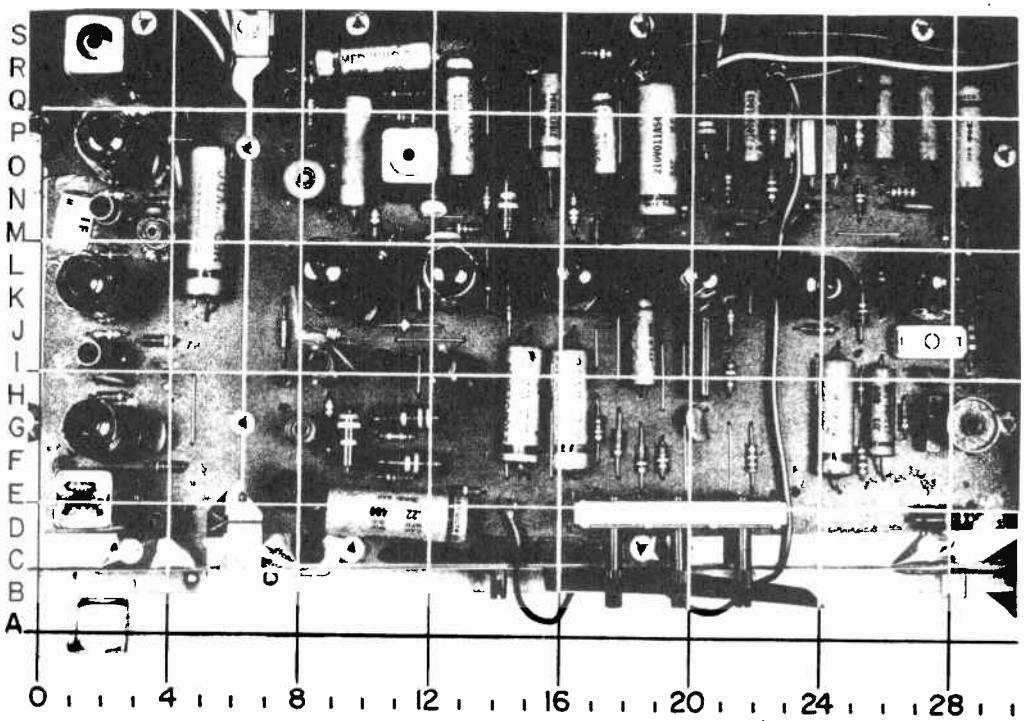

The schematic diagram of the V-2346 and V-2347 chassis is coded so that the location of parts can be easily determined.

If the part number on the schematic diagram Fig. 14 has a dash (-) above the part number, for example C309, it means that the part will be found on the IF printed board. If the dash is below the number, the part will be found on the sweep board, for example, R404. Component numbers not having the dash will be located elsewhere on the chassis.

These associated photos will be useful when locating the part on the printed boards.

Ref. No.	Board Location	Ref. No.	Board Location	Ref. No.	Board Location	Ref. No.	Board Location	Ref. No.	Board Location
C200	K10	C315	E12	C403	H20	R400	E11	R421A	E22
C201	J9	C316	Q22	C404	H16	R401	J24	R424	N22
C202	J11	L302	O8	C405	P17	R402	K25	R425	N24
C203	I13	L303	I9	C406	H15	R403A	E20	R426	R25
C204	K12	L304	G8	C407	Q16	R404	F19	R427	N25
C205	M12	L305	E8	C408	Q19	R405	G11	R428	O26
C206	N12	R300	Q11	C409	N22	R406	N19	R429	M29
C207	Q13	R301	Q8	C410	N23	R407	O21	R430	P25
L200	I11	R302	R8	C411	P24	R408	J21	R431	I25
L201	I12	R314	Q11	C412	Q23	R409	I21	R432	J29
L202	O11	R315	J8	C413	P23	R410	Q20	R433	N26
R200	M11	R316	O9	C414	N27	R411	G17	R434	H27
R201	M10	R317	G9	C415	Q26	R412	S17	R435	L26
R203	M13	R319	F9	C416	Q27	R414A	E18	R438	F25
R204	N14	R320	G11	C417	Q29	R415	F19	R442	D28
R205	L14	R321	F12	C418	G27	R416	G18	Z400	J20
R206	N14	R322	E13	C420	G26	R417	N16		
C300	O10	R323	Q22	C421	I28	R418	K14		
C301	R10	C400	G24	C422	J25	R419	M17		
C314	I10	C401	J19	L400	G29	R420	F22		

Ref. No.	Board Location	Ref. No.	Board Location	IF BOARD		Ref. No.	Board Location	Ref. No.	Board Location
C302	O4	C310	I2	R304	Q2	R310	J2	T302	E2
C303	M4	C312	G4	R305	N3	R311	J4	Z300	S1
C304	L4	C313	O4	R306	N4	R312	H2	Video Detector	E1
C305	I2	L300	M4	R307	O4	R313	F4	C501	M2
C306	Q4	L301	D4	R308	P4	T300	N2	C502	K3
C307	M5	R303	Q3	R309	L2	T301	I2	C503	F1
C309	K3								

ZENITH RADIO CORPORATION

CHASSIS 16Z25 MODELS Z1510L-Z1511B-Z1512J

Circuit diagram on pages 176-177, additional service material on page 178. This new Chassis 16Z25 is similar to 16Z20 covered in a previous volume. Adjustment and alignment procedures are identical for both chassis. Refer to Volume TV-12, Early 1957 Television Servicing Information, pages 178 through 181, for adjustment and alignment instructions.

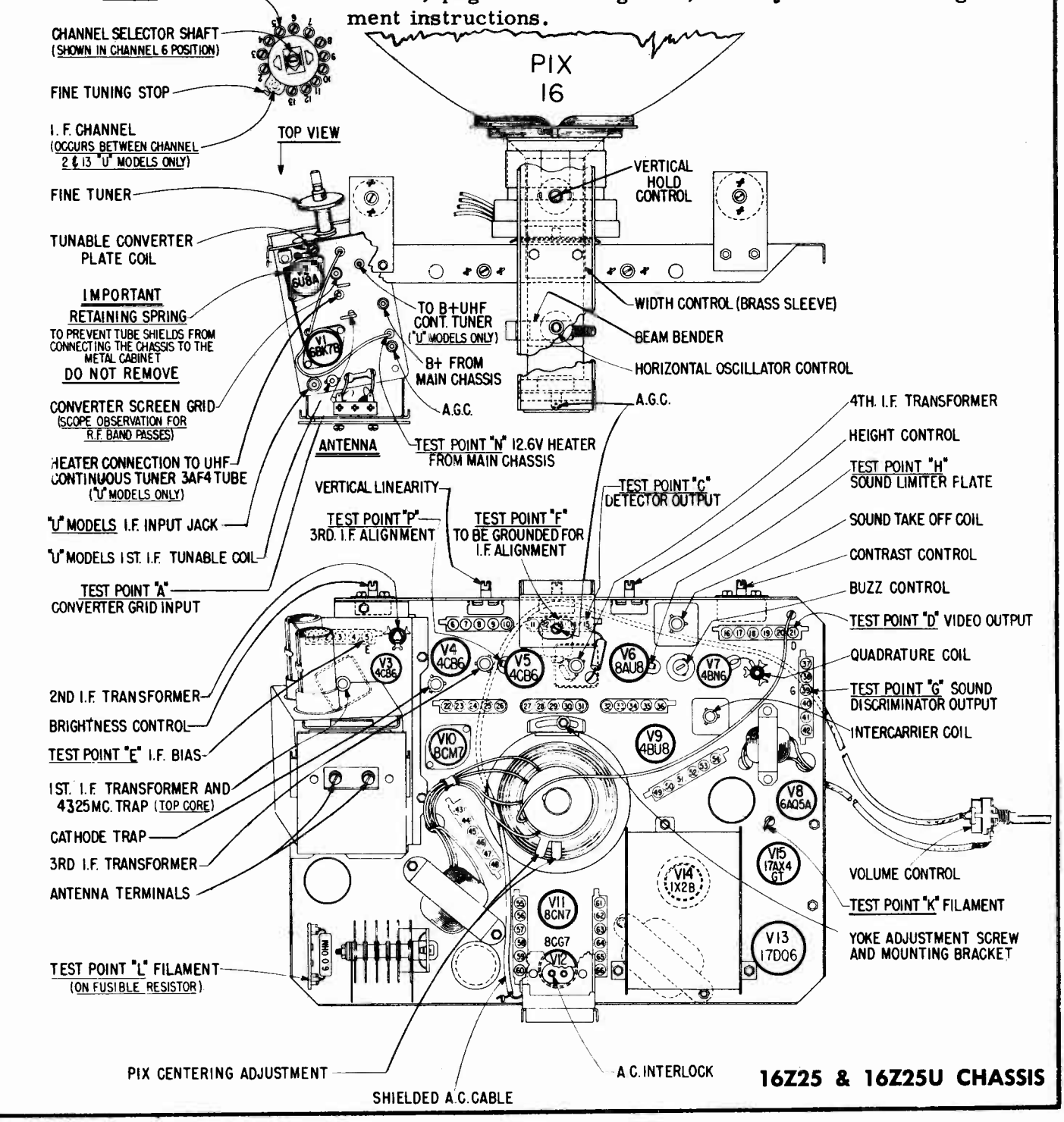

16Z25 & 16Z25U CHASSIS

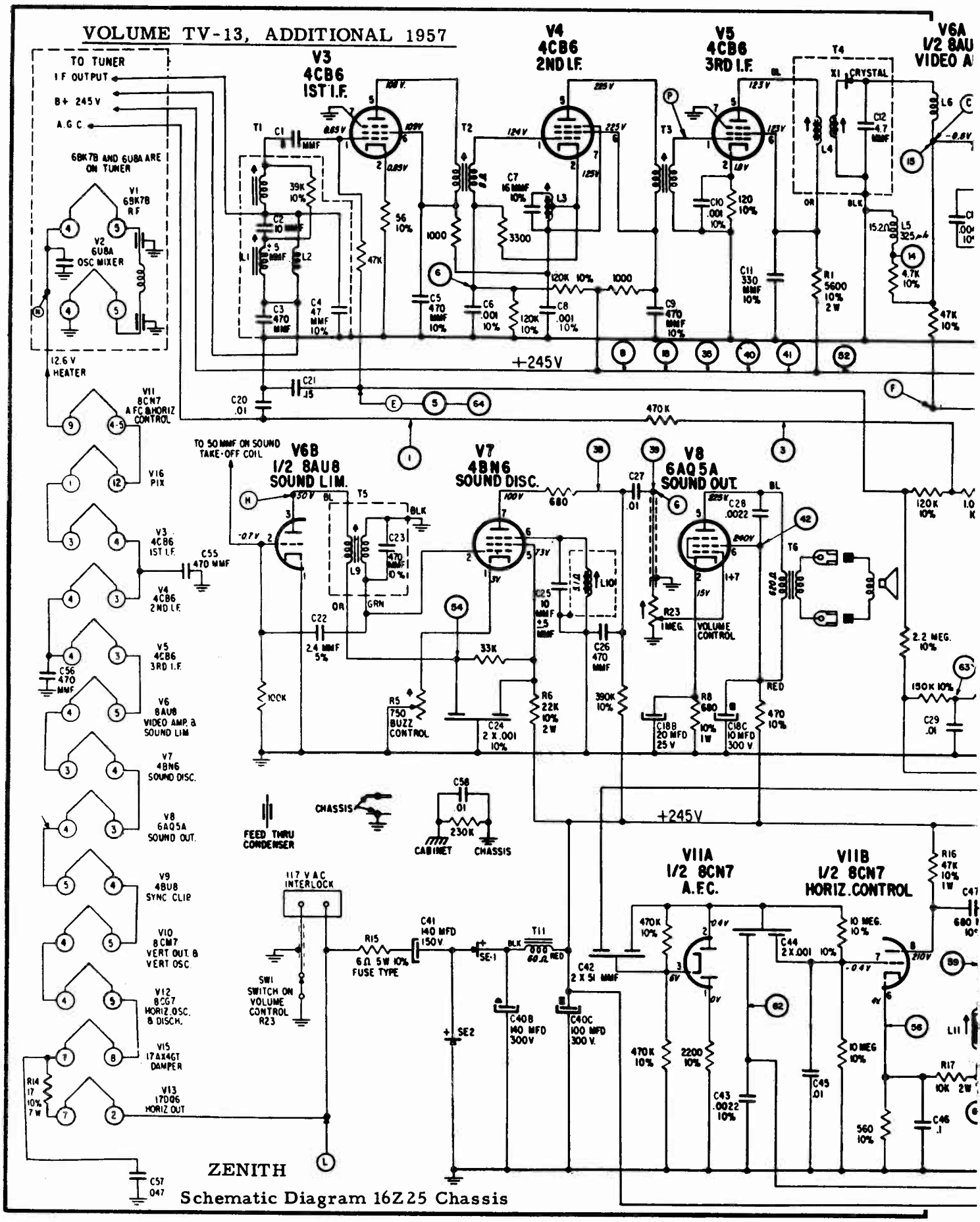

ZENITH

Schematic Diagram 16Z25 Chassis

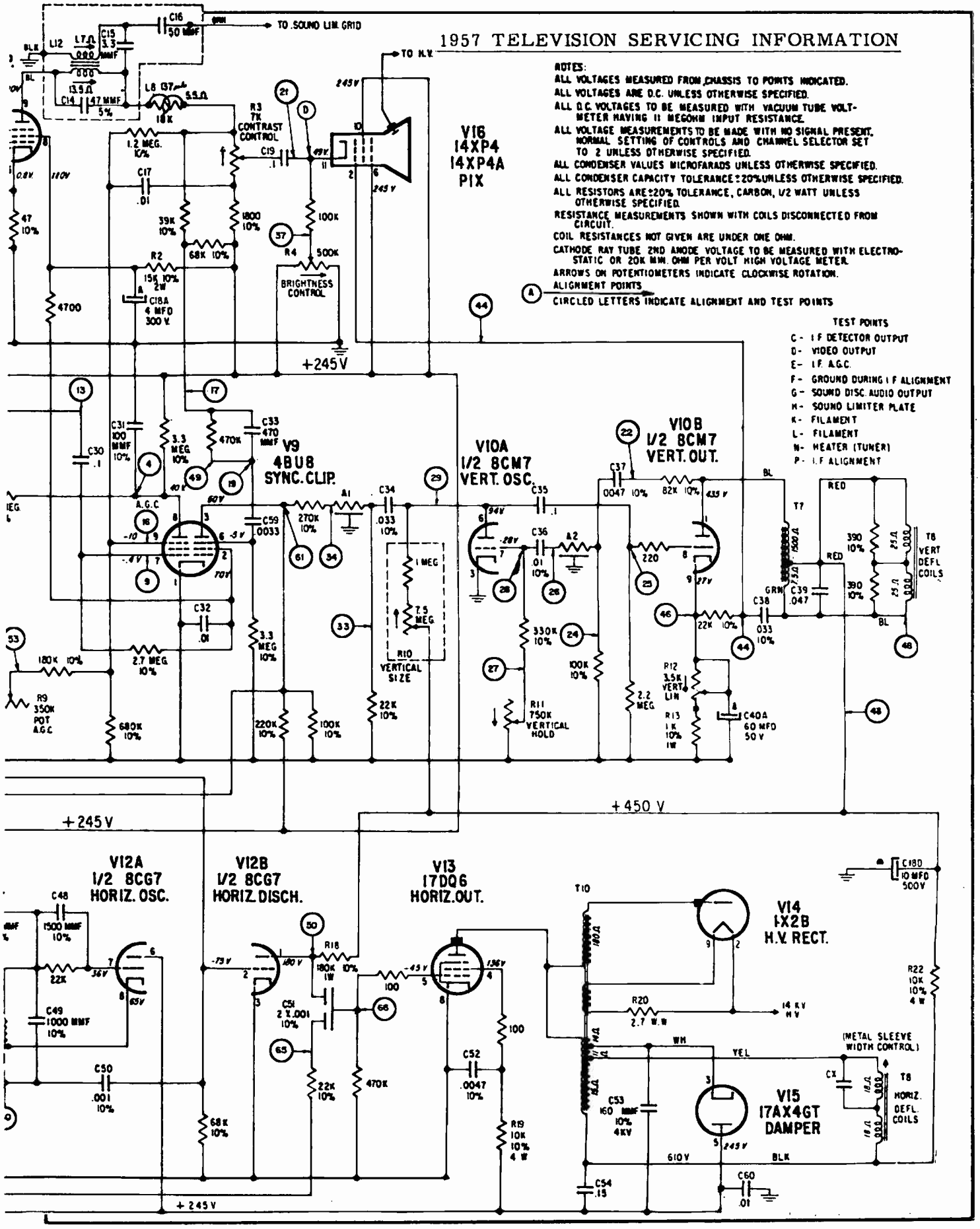
NOTES:
ALL VOLTAGES MEASURED FROM CHASSIS TO POINTS INDICATED.
ALL VOLTAGES ARE D.C. UNLESS OTHERWISE SPECIFIED.
ALL D.C. VOLTAGES TO BE MEASURED WITH VACUUM TUBE VOLTMETER HAVING 11 MEGOHM INPUT RESISTANCE.
ALL VOLTAGE MEASUREMENTS TO BE MADE WITH NO SIGNAL PRESENT, NORMAL SETTING OF CONTROLS AND CHANNEL SELECTOR SET TO 2 UNLESS OTHERWISE SPECIFIED.
ALL CONDENSER VALUES MICROFARADS UNLESS OTHERWISE SPECIFIED.
ALL CONDENSER CAPACITY TOLERANCE ±20% UNLESS OTHERWISE SPECIFIED.
ALL RESISTORS ARE ±20% TOLERANCE, CARBON, 1/2 WATT UNLESS OTHERWISE SPECIFIED.
RESISTANCE MEASUREMENTS SHOWN WITH COILS DISCONNECTED FROM CIRCUIT.
COIL RESISTANCES NOT GIVEN ARE UNDER ONE OHM.
CATHODE RAY TUBE 2ND ANODE VOLTAGE TO BE MEASURED WITH ELECTROSTATIC OR 20K MIN. OHM PER VOLT HIGH VOLTAGE METER.
ARROWS ON POTENTIOMETERS INDICATE CLOCKWISE ROTATION.
ALIGNMENT POINTS
CIRCLED LETTERS INDICATE ALIGNMENT AND TEST POINTS
TEST POINTS
C - I.F. DETECTOR OUTPUT
D - VIDEO OUTPUT
E - I.F. A.G.C.
F - GROUND DURING I.F. ALIGNMENT
G - SOUND DISC. AUDIO OUTPUT
H - SOUND LIMITER PLATE
K - FILAMENT
L - FILAMENT
N - HEATER (TUNER)
P - I.F. ALIGNMENT
TO SOUND LIM. GRID
TO H.V.
V16 14XP4 14XP4A PIX
R3 7K CONTRAST CONTROL
BRIGHTNESS CONTROL
+245V
V9 4BU8 SYNC. CLIP.
V10A 1/2 8CM7 VERT. OSC.
V10B 1/2 8CM7 VERT. OUT.
VERTICAL SIZE
VERTICAL HOLD
VERT DEFL COILS
R9 350K POT A.G.C.
+450 V
V12A 1/2 8CG7 HORIZ. OSC.
V12B 1/2 8CG7 HORIZ. DISCH.
V13 17DQ6 HORIZ. OUT.
V14 1X2B H.V. RECT.
V15 17AX4GT DAMPER
(METAL SLEEVE WIDTH CONTROL)
HORIZ. DEFL. COILS
14 KV H.V.

ZENITH RADIO
Chassis 16Z25
(Continued)

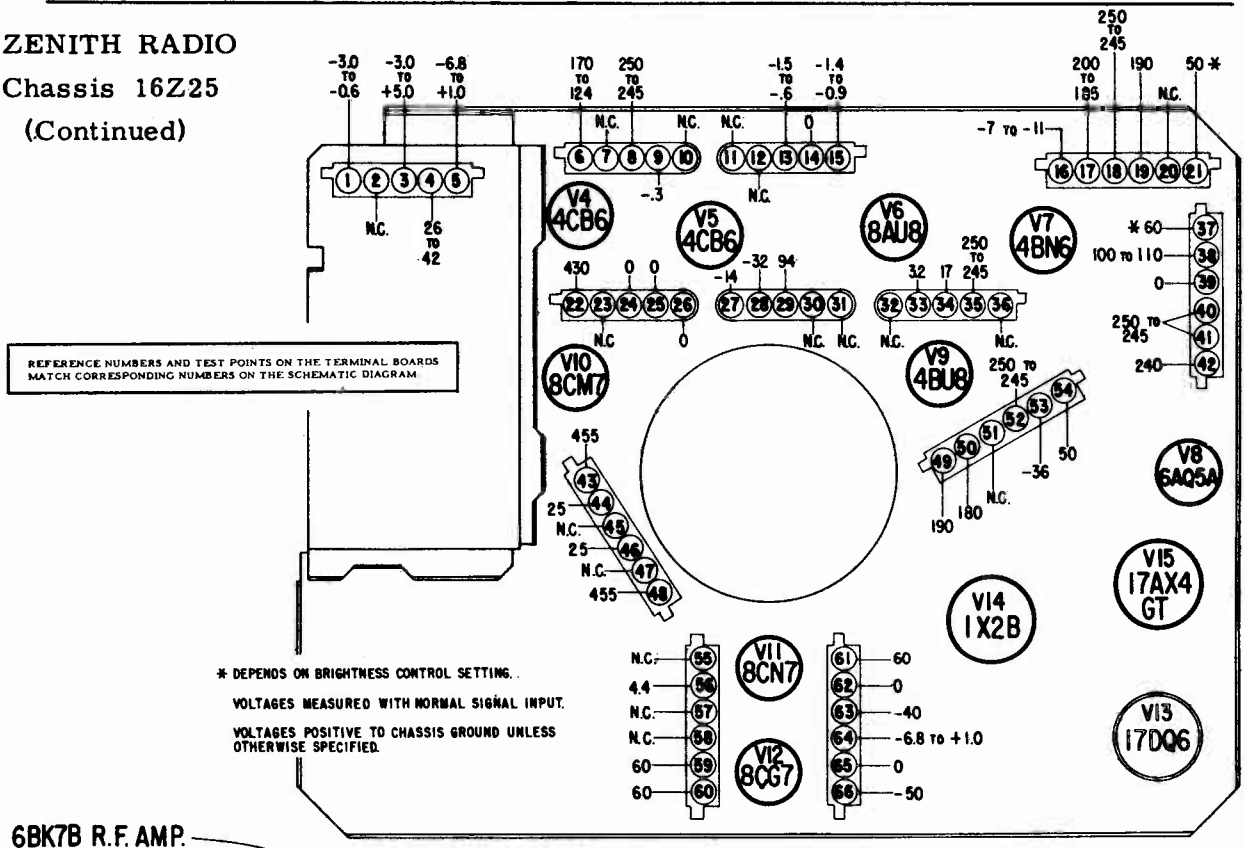

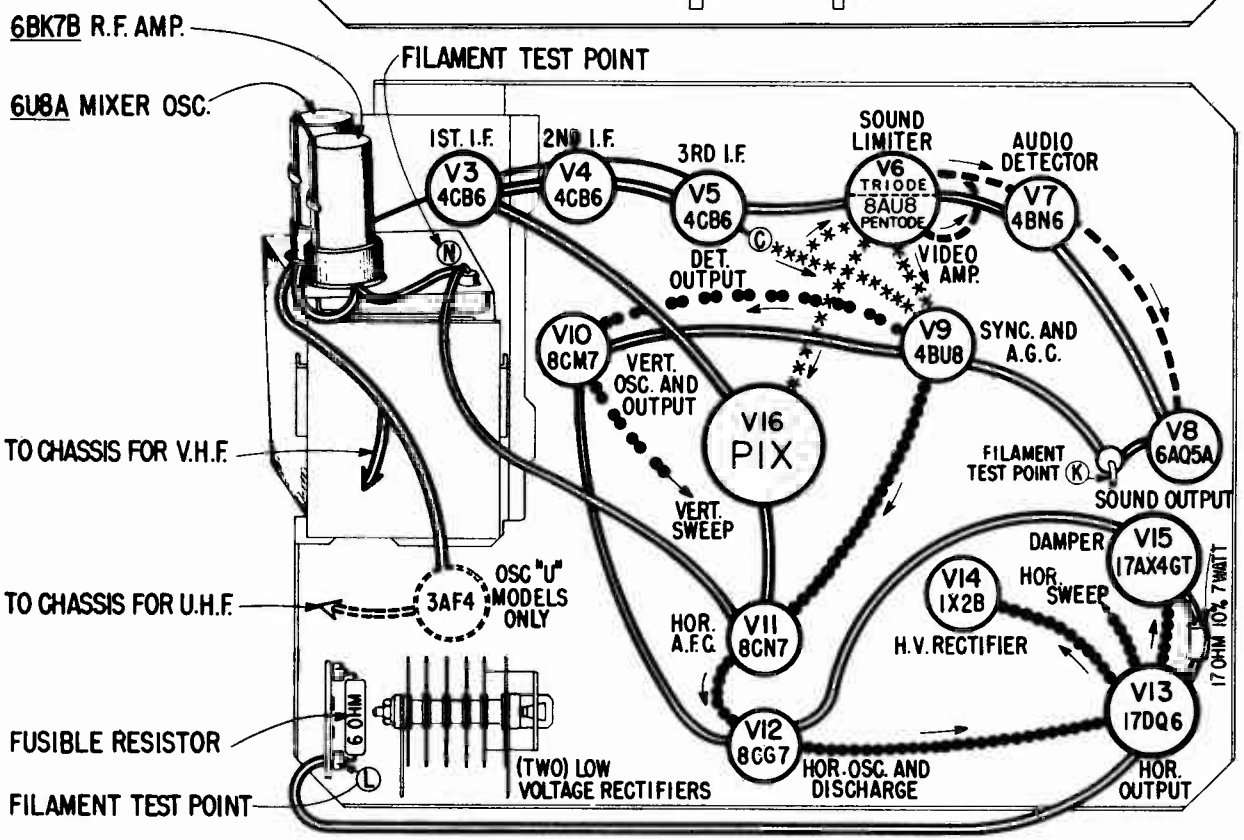

ZENITH RADIO CORPORATION

Chassis 15Z30, 15Z31, 17Z30, 17Z31, 17Z32, 17Z33, 17Z34Q, 19Z32, 22Z30

With the exception of tuners used and small differences in IF and AFC circuits, the 15Z and 17Z chassis listed above are similar in design and adjustment. See pages 182-183 for material on the 15Z group, and pages 184-185 for 17Z group. The 19Z32 and 22Z30 horizontal chassis are equipped with Bulls-Eye tuner and are similar. Material on these sets is on pages 186 through 189; tuners are on page 190. A cross-reference table of chassis and model numbers is at right. A suffix "U" is added to chassis and model number when the receiver is equipped with UHF continuous tuner. Suffix "Q" following chassis number identifies receiver with remote control.

MODEL	TYPE	CHASSIS
Z1812RZ	Table	15Z30
Z1817GZ,LZ	Table	15Z31
Z1819JZ	Table	15Z31
Z2221RZ	Table	17Z30
Z2223EZ,RZ	Table	17Z31
Z2223YZ	Table	17Z31
Z2223CZ	Table	17Z31
Z2229RZ	Table	19Z32
Z2230EZ,RZ	Table	19Z32
Z2243EZ,RZ	Console	17Z32
Z2244EZ,RZ	Console	17Z32
Z2249EZ,RZ	Console	17Z32
Z2251EZ,RZ	Console	17Z32
Z2257EZ,MZ	Console	19Z32
Z2257RZ	Console	19Z32
Z2282EZ,RZ	Lo-Boy	17Z32
Z2359EZ,RZ,Z	Console	22Z30
Z2360RZ	Console	22Z30
Z2675EZ,RZ	Console	17Z33
Z3000EZ,RZ	Table	17Z32Q
Z3001EZ,RZ	Table	17Z34Q
Z3004EZ,RZ	Console	17Z32Q
Z3008EZ,RZ	Console	17Z34Q
Z3010EZ,HZ	Console	19Z32Q
Z3010RZ,YZ	Console	19Z32Q
Z3012HZ,RZ	Console	22Z30Q
Z3014HZ,RZ	Console (Doors)	22Z30Q
Z4000EZ,RZ	Table (Legs)	17Z33Q
Z4006EZ,RZ	Console	17Z33Q

BULLS EYE TUNER ADJUSTMENTS 19Z & 22Z CHASSIS

To adjust the receiver for bulls-eye tuning, set the fine tuning control to its approximate center position. Without further adjustment of the control insert an 68-31 alignment wrench through the hole provided at the rear of the tuner and adjust each operating channel to resonance. It will be noted that tuning to one side of resonance results in a faded, washed-out picture with the spacings between the wedge lines fogged and tuning in the opposite direction causes the spaces between the lines to clear up. However, going beyond this point causes the picture to take on a "wormy" appearance from sound getting into the picture. Correct adjustment is obtained by tuning to the "wormy" picture and then backing the adjustment screw slightly until the picture clears up.

AGC ADJUSTMENT

The AGC is adjusted at the factory (using a 100% modulated video signal) to obtain 125 volts (approximately 100 volts, 15Z & 17Z chassis) peak video amplifier output as measured at the cathode of the picture tube.

Satisfactory adjustment can also be made by observing the picture and slowly turning the AGC delay control until a point is reached where the picture distorts and buzz is heard in the sound. The control should then be backed down from this position and set at a point comfortably below the level of inter-carrier buzz, picture distortion and improper sync.

CAUTION: Misadjustment of the AGC delay control can result in a washed-out picture, distorted picture, buzz in sound OR COMPLETE LOSS OF PICTURE AND SOUND.

FRINGE LOCK ADJUSTMENT 19Z & 22Z CHASSIS

1. Turn the fringe lock control fully clockwise and then back it off approximately 1/4 turn. Adjust the vertical and horizontal hold controls and check operation of the receiver to see that it syncs normally when the turret is switched from channel to channel.

2. If the picture jitters or shows evidence of delay, tearing, split phase, etc., back down the fringe lock control further, a few degrees at a time, each time re-adjusting the hold controls and switching from channel to channel until normal sync action is obtained. It will be found that under normal signal conditions, the correct adjustment will be near the counter-clockwise position of the control.

3. In fringe and noisy areas, the best adjustment will be found at or near the maximum clockwise position of the control.

SOUND ALIGNMENT

Proper alignment of the 4.5 Mc intercarrier sound channel can only be made if the signal to the receiver antenna terminals is reduced to a level below the limiting point of the 6BN6 Gated Beam Detector. This level can be easily identified by the "hiss" which then accompanies the sound.

1. Connect the step attenuator between the antenna and the receiver antenna terminals.

2. Tune in a tone modulated TV signal. Adjust the step attenuator until the signal is reduced to a level where "hiss" is heard with the sound.

3. Adjust the sound take-off coil (top and bottom slugs), intercarrier transformer, quadrature coil and buzz control for the best quality sound and minimum buzz. It must be remembered that any of these adjustments may cause the "hiss" to disappear and further reduction of the signal will be necessary to prevent the "hiss" from disappearing during alignment.

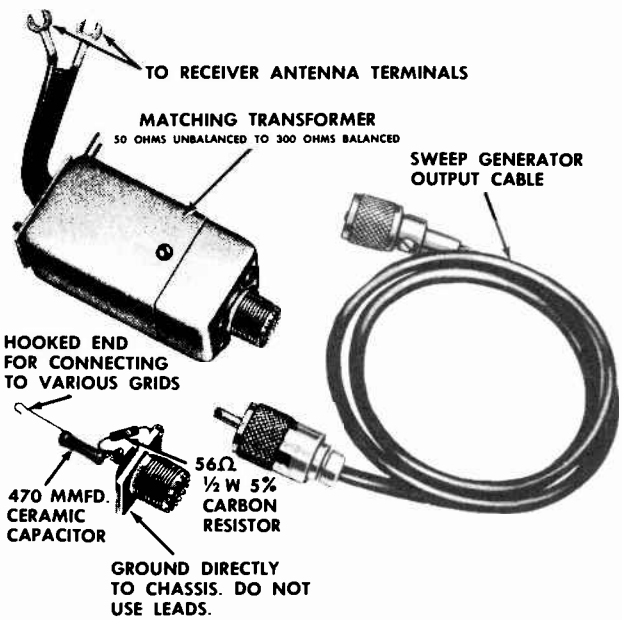

Fig. 3 IF-RF Alignment Fixtures

VIDEO IF ALIGNMENT 15Z & 17Z SERIES RECEIVERS

The video IF amplifier is stagger tuned, using one double tuned and four single tuned circuits. The converter plate coil tunes to 45.4 Mc, the first IF to 43.6 Mc, the second IF to 42.75 Mc, the third IF to 45 Mc, and the fourth IF (both cores) to 43.6 Mc. Two 47.25 Mc traps are used. One is part of the 1st IF transformer assembly and the other is wound on the same form as the 40.50 second IF cathode trap. Attenuation of the 41.25 Mc associated sound carrier is controlled by adjusting the band width. With the exception of the traps, a slight deviation from the above mentioned frequencies is permissible to obtain proper band pass; however, the order must be maintained. To align the IF, proceed as follows:

1. To prevent an erroneous IF response, disable the local oscillator by wrapping a short bare wire around the oscillator grid and grounding same.

2. In the 15Z30 and 17Z30 chassis connect the negative lead of 6V bias to "E" and the positive lead to chassis. In all other vertical chassis use 5V bias, however, connect the positive lead to the junction of the 56 and 1500 ohm resistors in the 1st IF cathode circuit.

3. Connect a calibrated oscilloscope through a 10K isolation resistor to terminal "C".

4. Connect the sweep generator through a terminating network (Fig. 3) to the grid (pin 1) of the third IF.

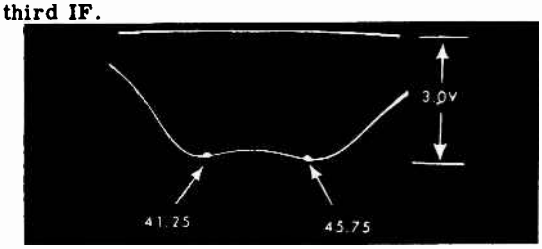

Fig. 4 4th IF Response

5. Adjust the sweep generator to obtain a pattern similar to Fig. 4 with a detector output of 3 volts peak to peak. Do not exceed this output during alignment.

6. Adjust the top and bottom cores of the fourth IF transformer to obtain a response similar to Fig. 4. The 41.25 and 45.75 Mc markers should be adjusted for symmetry and should fall as close to the response curve humps as possible. If the correct response curve cannot be obtained, check the position of the two cores to see that they are not butted but are entering their respective windings from the opposite ends of the coils.

7. Connect the sweep generator to test point "A" (Fig. 20) and adjust attenuator to obtain 3 volts peak to peak output at the detector.

8. Adjust the first IF bottom core (44.Mc), second IF (42.75 Mc), third IF (45 Mc), and converter plate coil to obtain a response similar to Fig. 5.

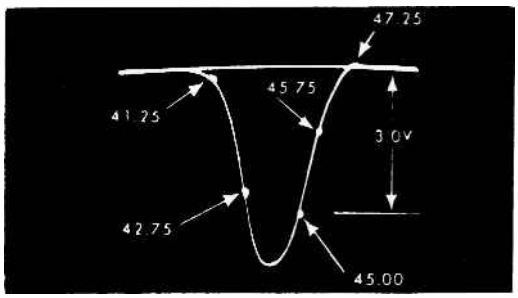

Fig. 5 Overall IF Response

9. Switch the oscilloscope to 10X gain used in the above steps to blow up the trap slots. Adjust both 47.25 Mc traps for maximum attenuation of 47.25 Mc marker. The 41.25 Mc marker should be in the approximate position shown in Fig. 6. On some receivers more oscilloscope gain, more signal input, or lower bias may be necessary to adjust the 47.25 Mc trap. (If the 41.25 Mc marker does not fall at the

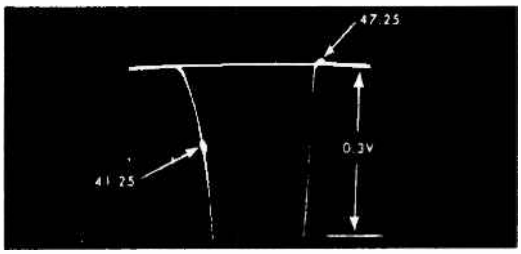

Fig. 6 Expanded View Of Traps

approximate position shown or nearer the base line, it may be necessary to make a slight re-adjustment of the 2nd IF. If this is done, check the overall response after adjustment.)

10. Switch oscilloscope to position used in Step 8. Remove the bias battery and ground the AGC. Adjust signal generator to obtain a 3 volt peak to peak response similar to Fig. 7. Adjust the 2nd IF cathode trap for maximum displacement of the 40.50 Mc marker but not to exceed the displacement of the 41.25 Mc marker.

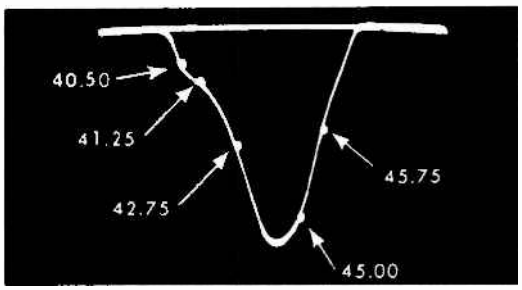

Fig. 7 Overall Response With Zero Bias For Adjusting The 40.5 Mc Trap

VIDEO IF ALIGNMENT 19Z & 22Z

1. Slowly turn the channel selector until the turret is made to rest between two channels. Connect the negative lead of a battery bias supply to terminal "H" (Fig.24) and the positive lead to chassis. The bias supply should be adjustable so that it can be varied from negative 3 volts to positive 3 volts. Keep the supply leads short.

2. Connect a calibrated oscilloscope through a 10,000 ohm isolation resistor between terminal "E" and chassis. Adjust bias to -2 volts. The sweep generator input to the receiver should be adjusted for 3 volts peak to peak detector output. Do not exceed this output level during any of the adjustments.

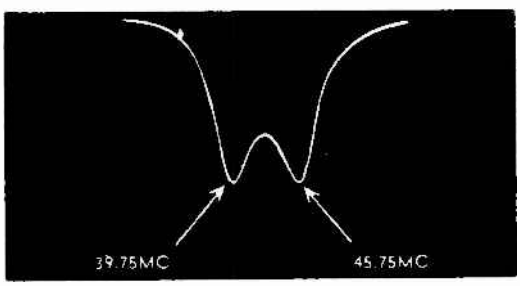

Fig. 8 4th IF Response

3. Feed the output from the sweep generator through the special termination unit shown in Fig. 3 to point "D" (pin 1 of 6CB6, 3rd IF). Adjust the generator until a pattern similar to Fig. 8 is obtained.

4. Set the Marker Generator to 45.75 Mc and alternately adjust the top and bottom cores of the 4th IF transformer for maximum gain and symmetry with the 45.75 Mc markers positioned as shown in Fig. 8. The 39.75 Mc marker can fall within ± 0.5 Mc of the specified frequency. If the correct response curve cannot be obtained in this step, check the position of the two cores to see that they are entering their respective windings from the opposite ends of the coil form.

5. Connect the sweep generator cable to terminal "A" (Mixer Grid, see Fig.42). In this step it may be necessary to temporarily reduce the bias to zero or even go slightly positive in order to observe the highly attenuated trap slots. Use maximum vertical gain on the oscilloscope.

6. Adjust the 47.25 Mc, 39.75 Mc and 41.25 Mc (Top slug of 1st IF transformer) traps for minimum marker amplitude, see Fig. 9. It can be seen that maximum oscilloscope gain has been used and the response curve has been "run off" the oscilloscope screen in order to see a "blow up" of the trap slots.

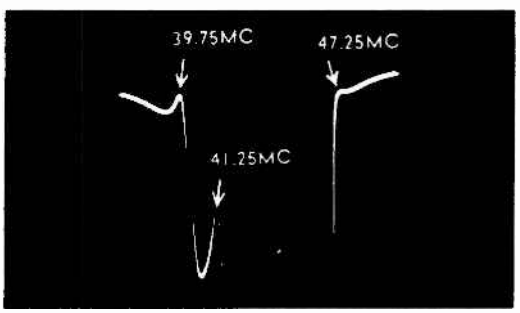

Fig. 9 Expanded View Of Traps

7. Readjust the bias to -2 volts and set the oscilloscope vertical gain to the calibrated position. Adjust the sweep generator for 3 volts peak to peak output at the video detector.

8. With the test equipment set up as in Step 7, alternately adjust the 2nd IF, 3rd IF, 1st IF and the converter plate coil until an overall response curve similar to Fig. 10 is obtained. Do not adjust the 4th IF in this step. It will be found that the 2nd IF affects the low side (42.75 Mc) and the 3rd IF the high side of the response curve.

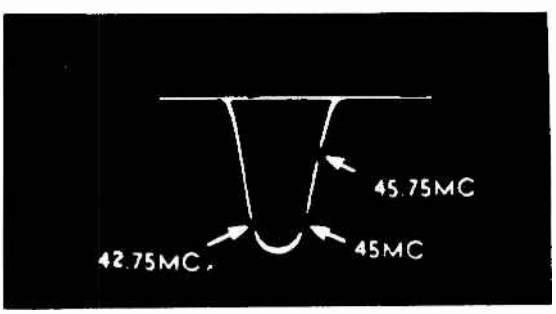

Fig. 10 Overall IF Response

ZENITH Service Data Chassis 15Z30, 15Z31, 17Z30 through 17Z34Q, 19Z32, 22Z30

CENTERING ADJUSTMENT

In the 15Z, 17Z and 19Z series receivers, the centering assembly is built into the yoke housing. This assembly is made of two magnetic rings which can be rotated by means of tabs. Centering is accomplished by gradually rotating the tabs with respect to each other, then rotating both tabs simultaneously until the picture is centered.

FILAMENT TEST POINTS

Test points L, K, and N are provided for ease in locating open filaments in the series string. Use an AC voltmeter (from chassis to various test points) or a neon indicator to determine which group contains the open filament.

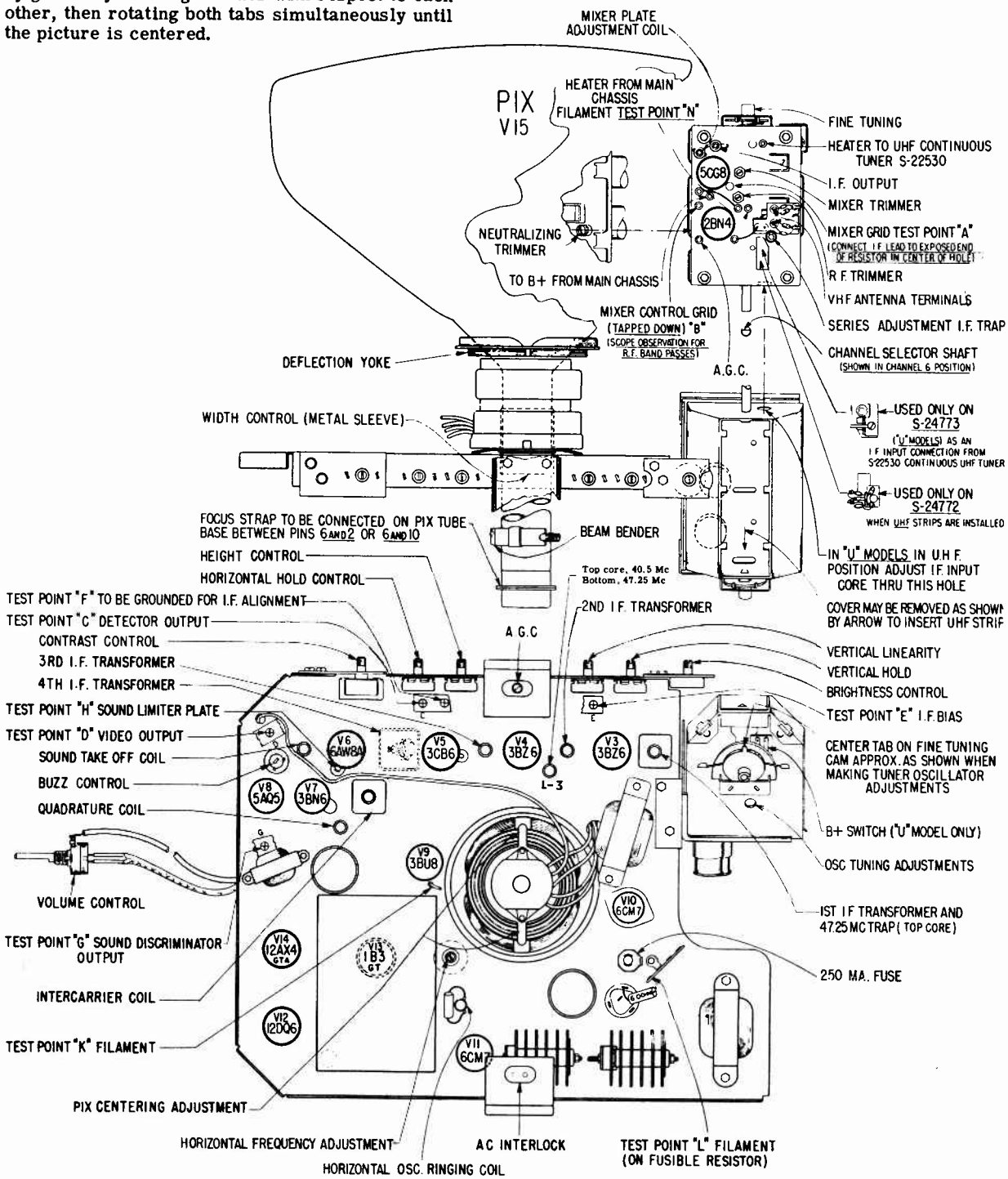

Fig. 20 Tube and Trimmer Layout 15Z31 Chassis

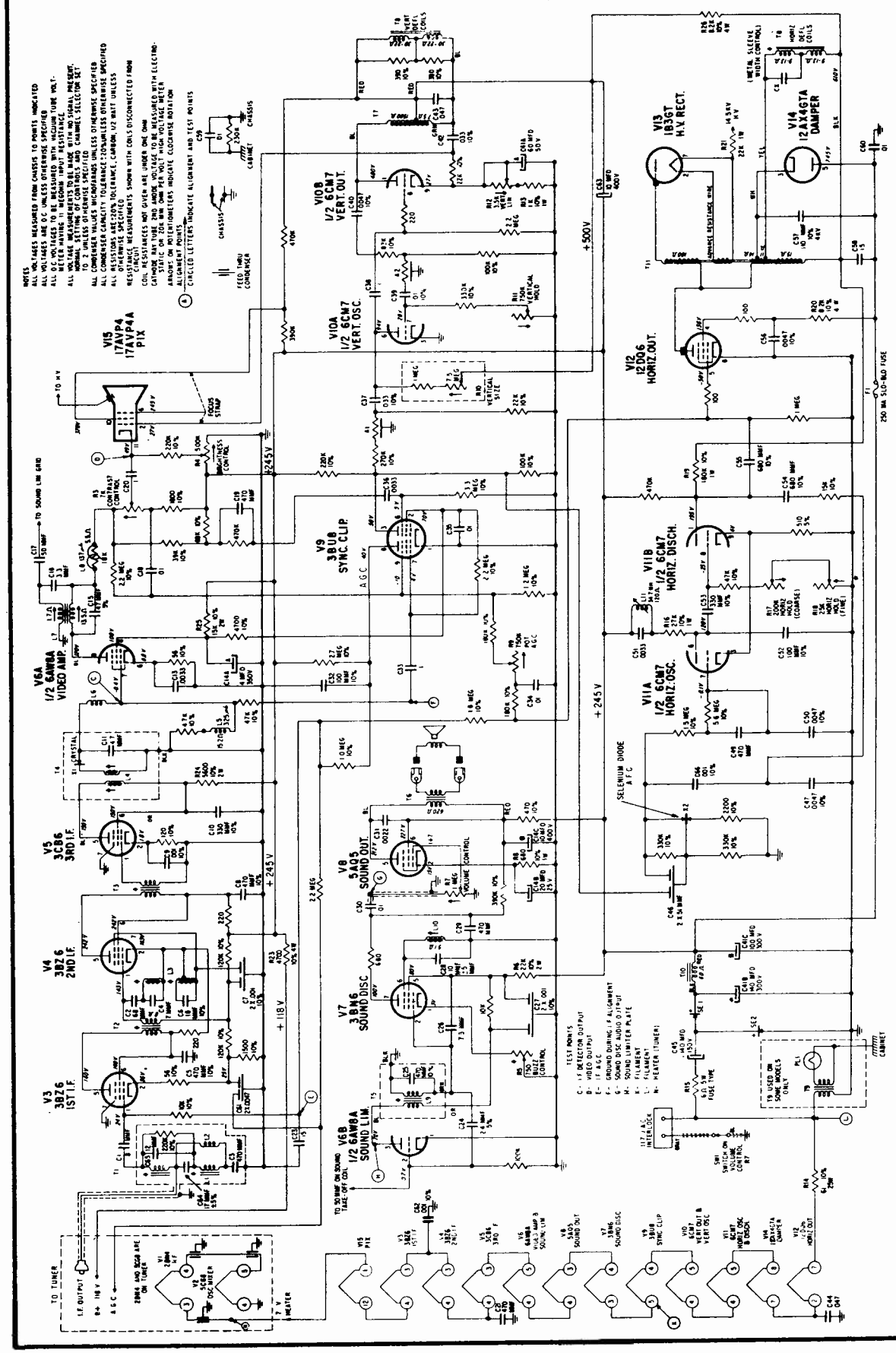

ZENITH Schematic Diagram Chassis 15Z31. Use this circuit also for 15Z30 Chassis which is practically identical, but among minor differences uses 3CB6's in IF stages.

ZENITH Layout for Chassis 17Z31, 17Z32, -Q, 17Z34Q (Continued)

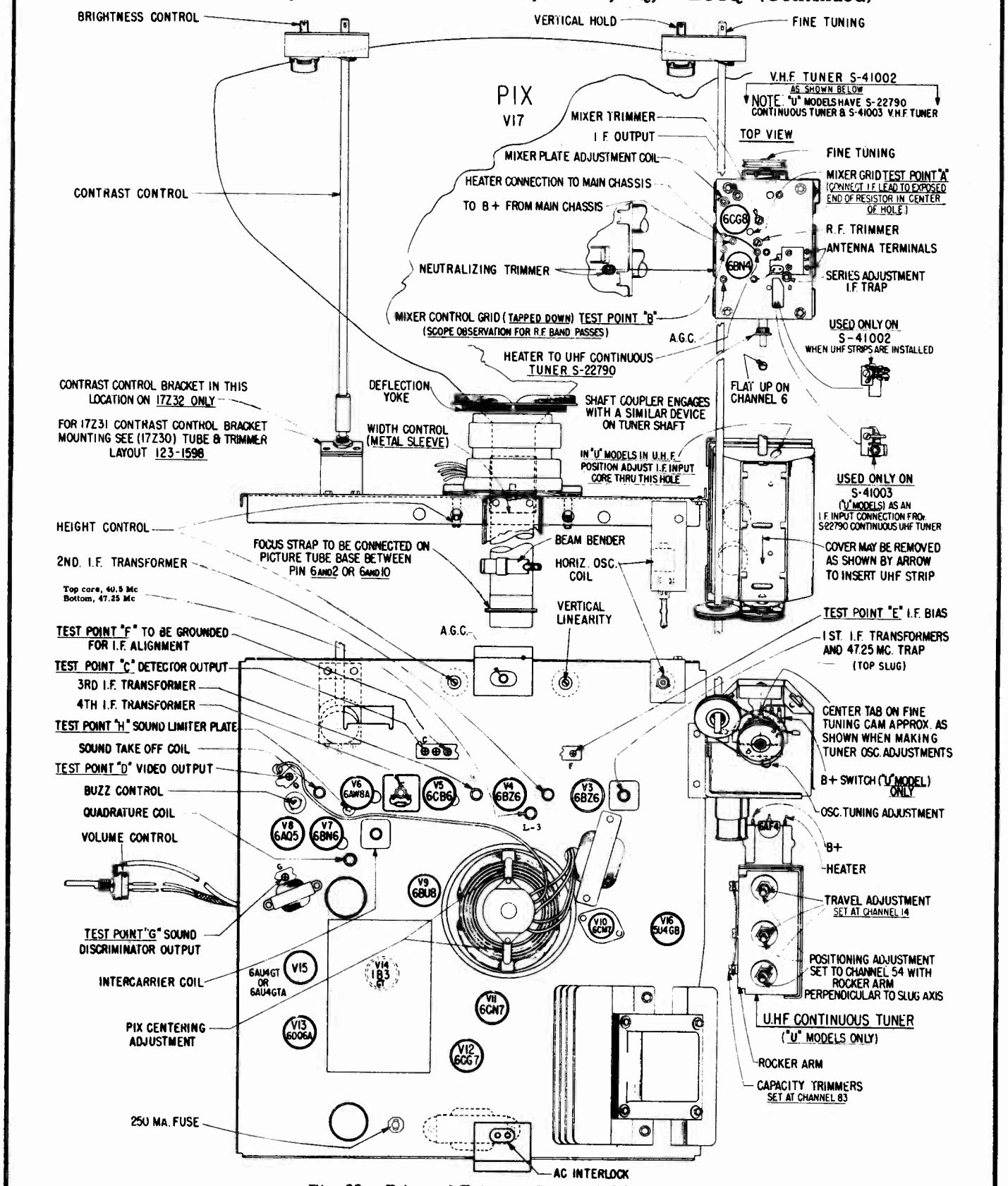

Fig. 22 Tube and Trimmer Layout 17Z31, 17Z32, 17Z32Q & 17Z34Q Chassis

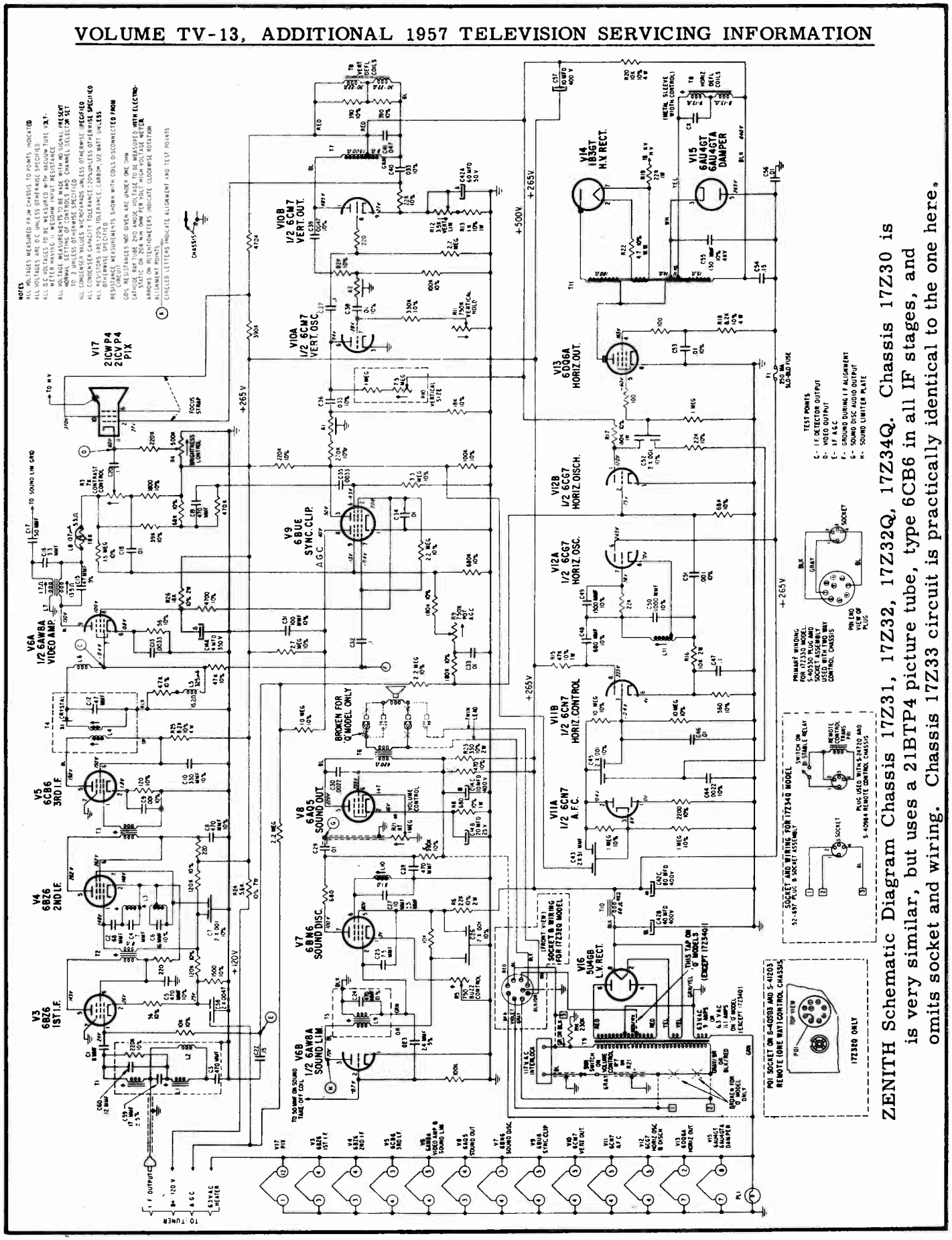

ZENITH Schematic Diagram Chassis 17Z31, 17Z32, 17Z32Q, 17Z34Q. Chassis 17Z30 is is very similar, but uses a 21BTP4 picture tube, type 6CB6 in all IF stages, and omits socket and wiring. Chassis 17Z33 circuit is practically identical to the one here.

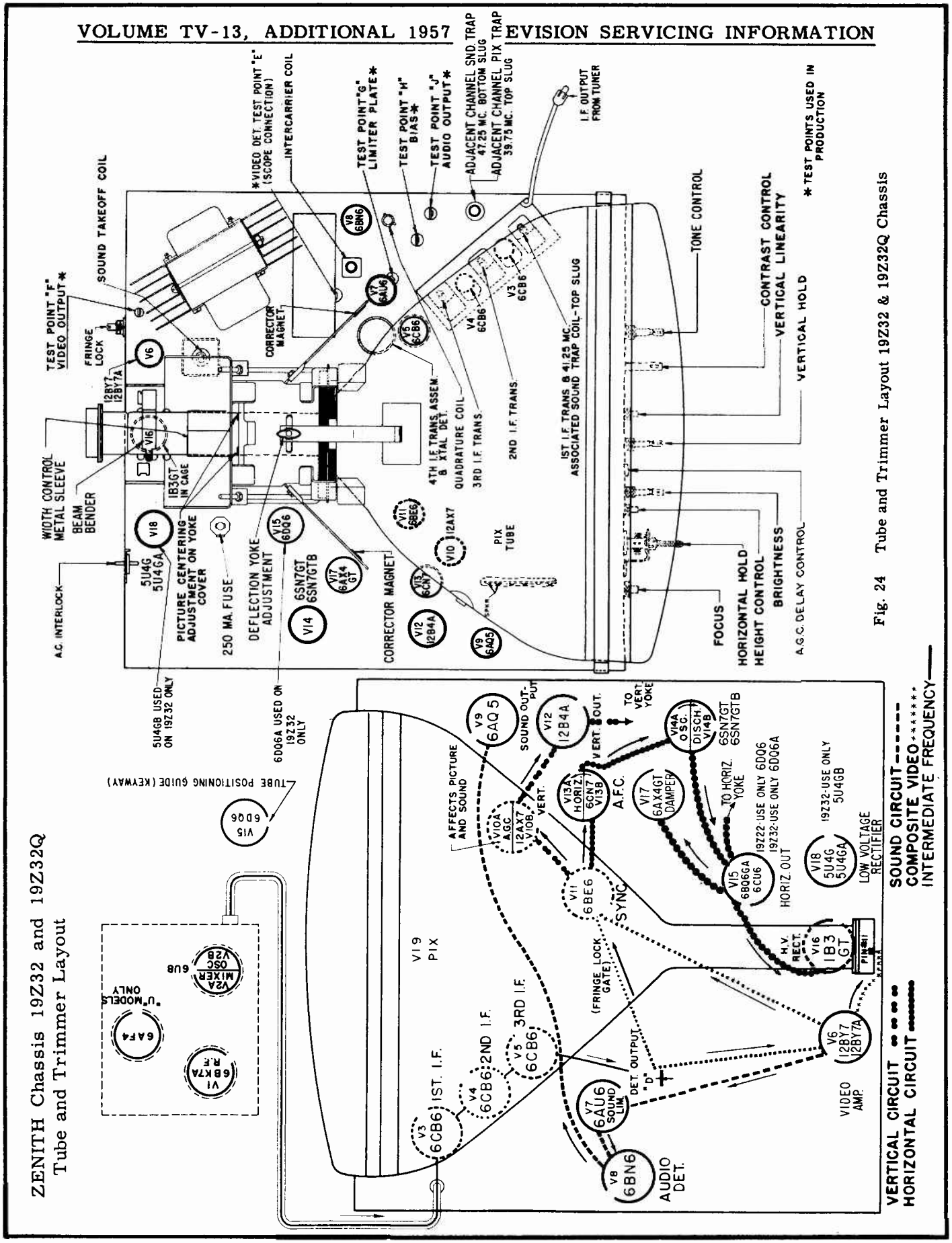

Fig. 24 Tube and Trimmer Layout 19Z32 & 19Z32Q Chassis

AFC ADJUSTMENT 17Z, 19Z & 22Z CHASSIS

The AFC is adjusted by setting the horizontal hold control L9 (L11 in 17Z chassis) to a position where it is virtually impossible to "throw" the receiver out of horizontal sync when switching from channel to channel.

ZENITH Schematic Diagram Chassis 19Z32

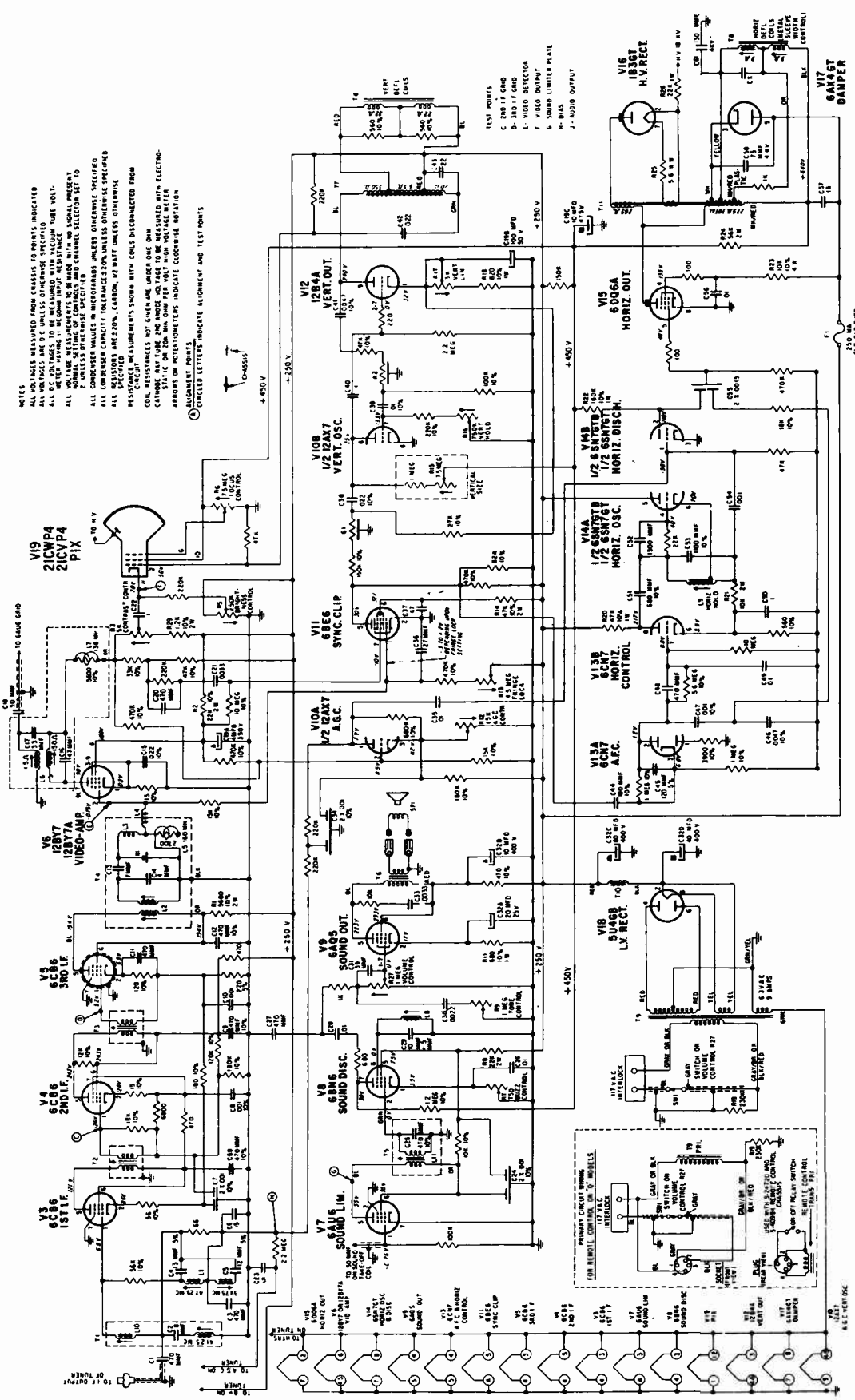

ZENITH Layout Chassis 22Z30 and 22Z30Q (Continued)

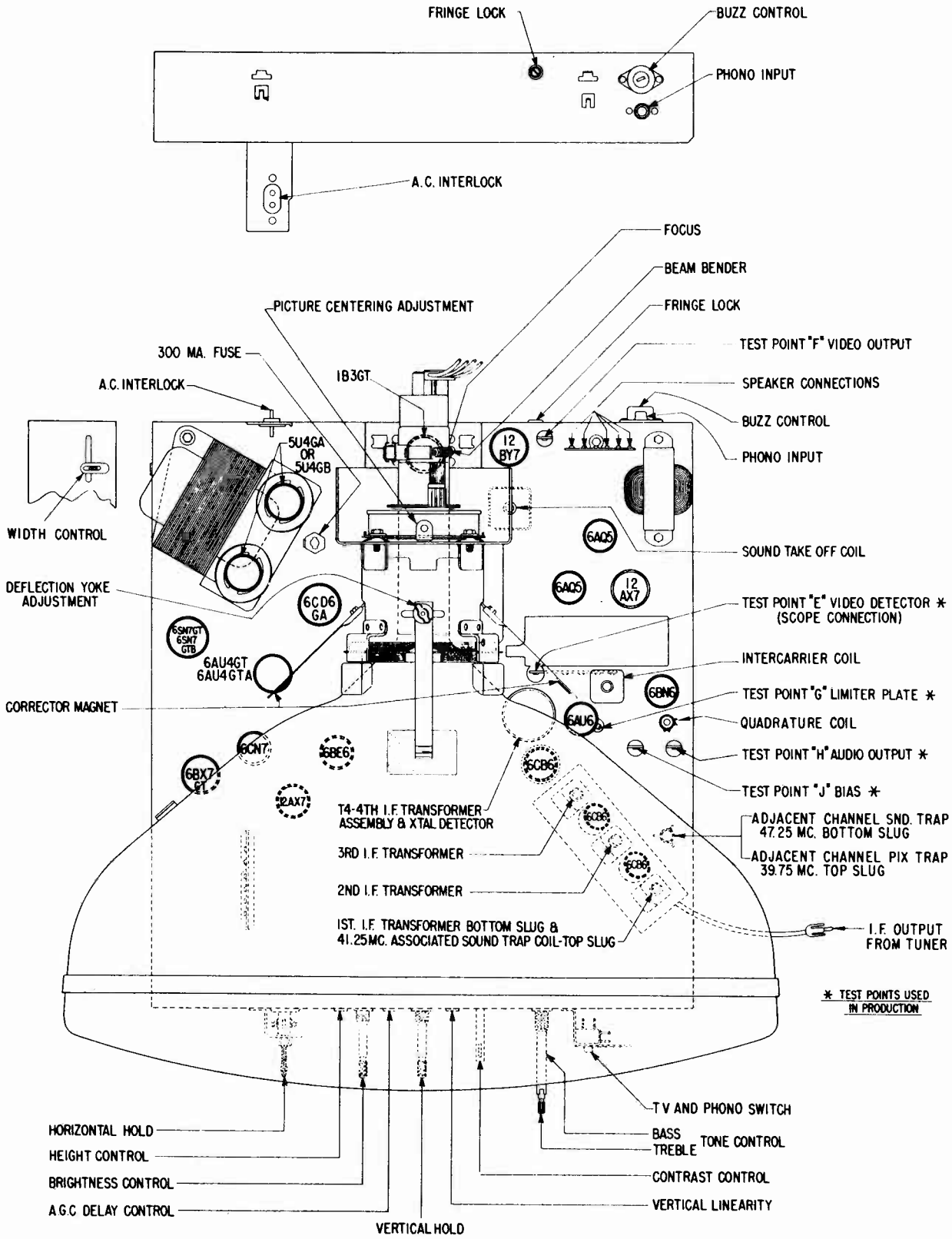

Fig. 25 Tube and Trimmer Layout 22Z30 & 22Z30Q Chassis

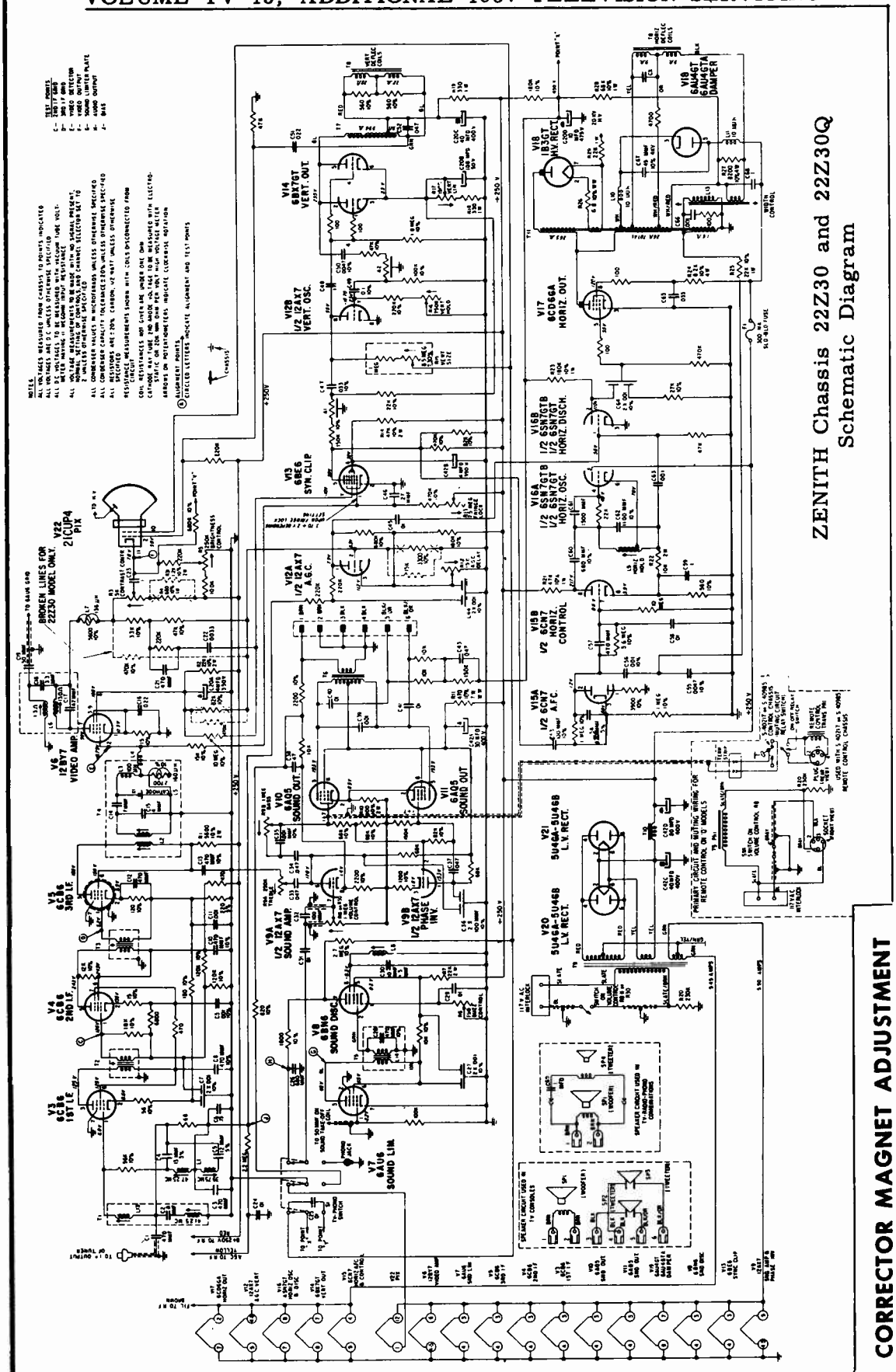

ZENITH Chassis 22Z30 and 22Z30Q
Schematic Diagram

1. With the vertical and horizontal size controls, reduce the size of the picture to a point where the four corners and sides of the picture are visible. (In some receivers it may not be possible to reduce the picture size sufficiently to see all the sides and in this case it may be necessary to shift the picture with the centering control to view one side at a time.)

2. Bend the corrector magnet arms until the corners become right angles and the top of the raster is parallel with the bottom and the left side is parallel with the right side. After adjustment, the picture should be restored to normal size.

NOTE: Mis-adjustment of the corrector magnets may cause pincushioning, barreling, keystoning, poor linearity, etc.

CORRECTOR MAGNET ADJUSTMENT 19Z & 22Z SERIES

Two corrector magnets are used to obtain straight, sharply focused sweep lines across the face of the picture tube. The magnets are mounted on the deflection coil mounting brackets and can be moved in and out or up and down by bending the flexible arms which support them. Adjustment has been made at the factory and should not require re-adjustment unless accidentally bent out of position. If this occurs, proceed as follows:

ZENITH
(Continued)

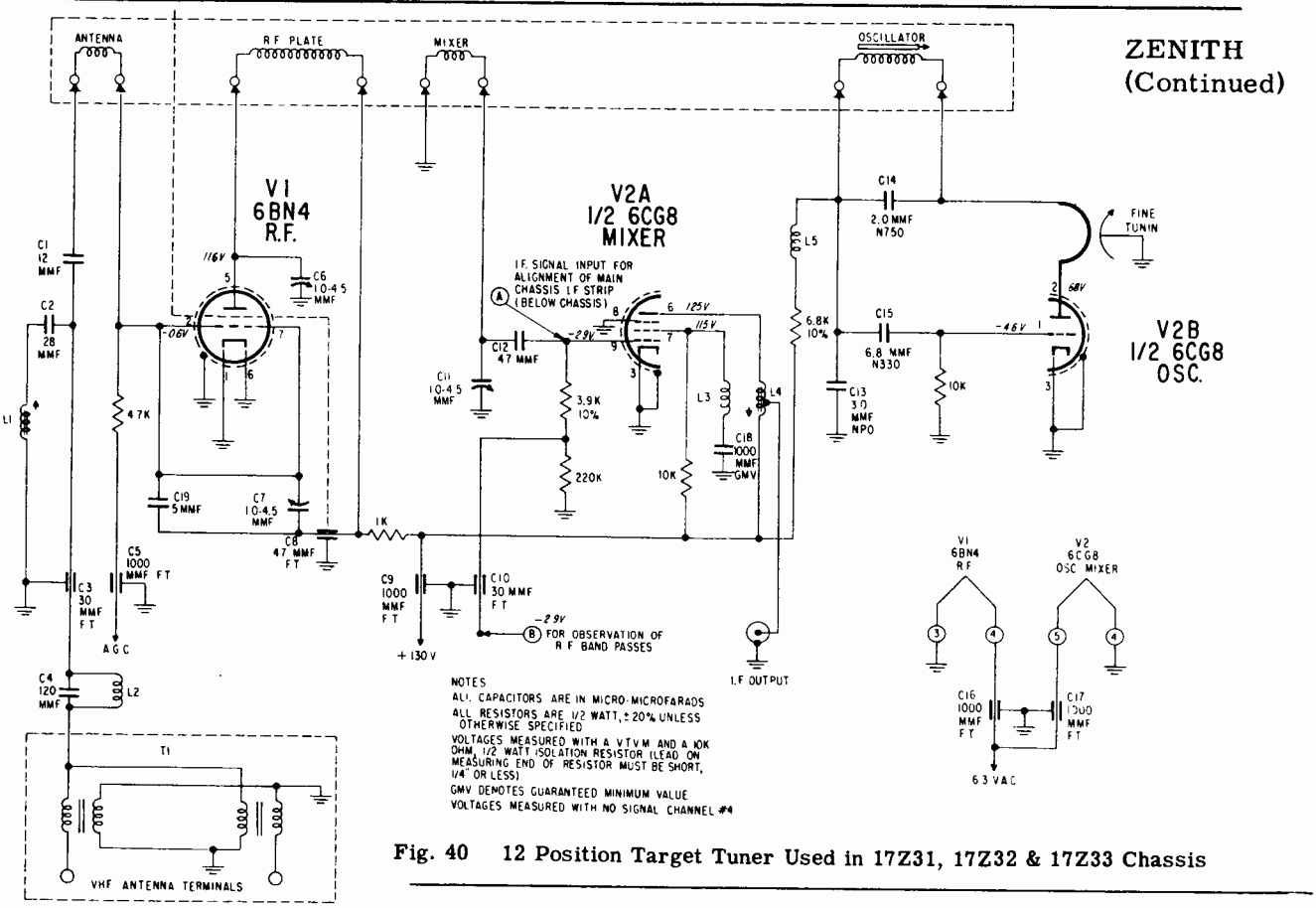

Fig. 40 12 Position Target Tuner Used in 17Z31, 17Z32 & 17Z33 Chassis

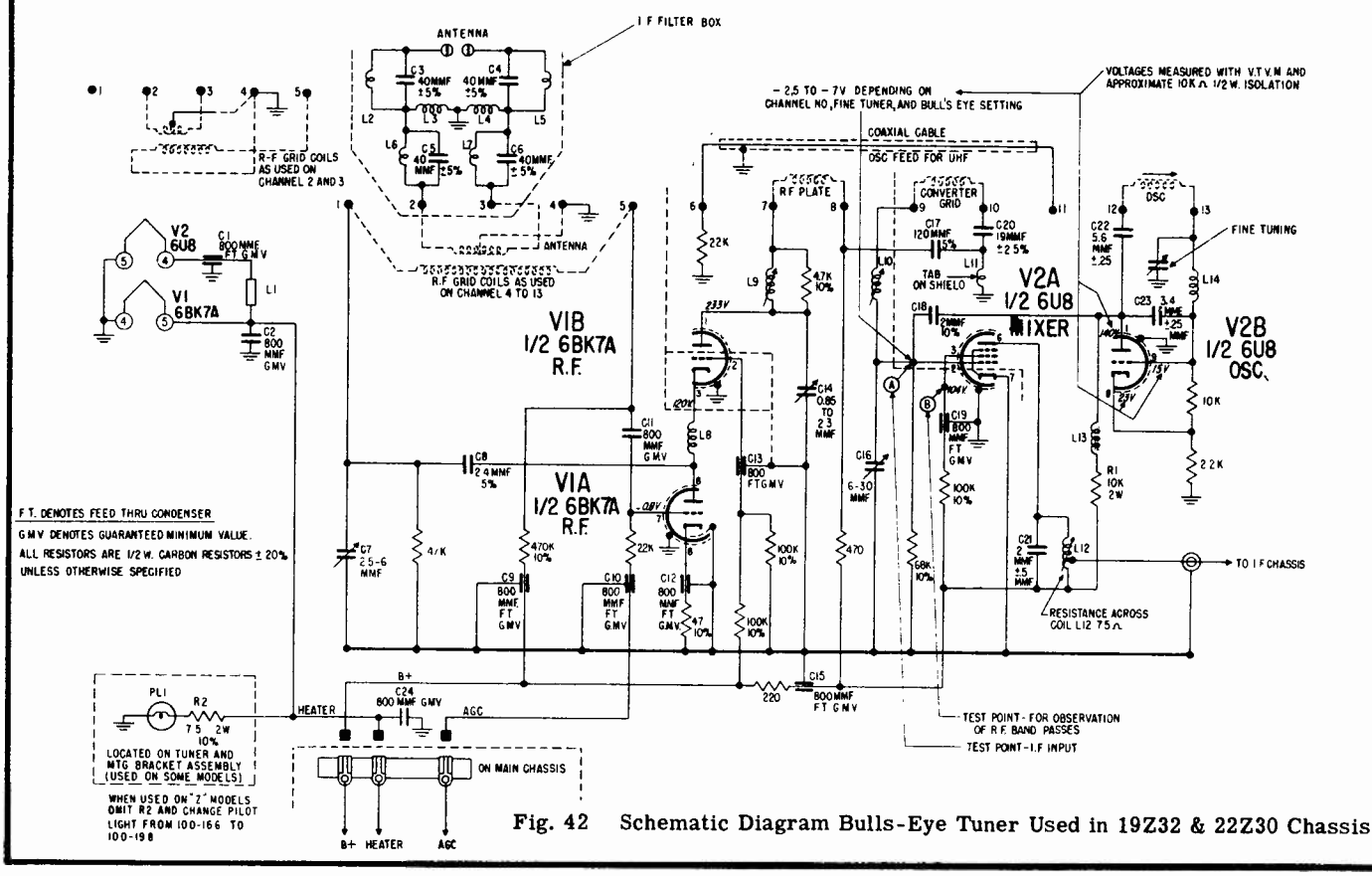

Fig. 42 Schematic Diagram Bulls-Eye Tuner Used in 19Z32 & 22Z30 Chassis

INDEX

Under each manufacturer's name, at left there are listed that make chassis and models in numerical order. The corresponding page number at right of each listing refers to the first page of the section dealing with such material.

Admiral Corp.

4R2 19
P14D11 12
P14D12 12
P14D13 12
P14D14 12
PA14D11 12
PA14D12 12
PA14D13 12
PA14D14 12
16AB1 14
16AD1 14
16AE1 14
16AF1 10
16AH1 12
16B1 14
16D1 14
16E1 14
16F1 10
16H1 12
17AB1 19
17AC1 5
17AF1 23
17AG1 5
17B1 19
17C1 5
17F1 23
17G1 5
P17D21 10
P17D22 10
P17D23 10
P17D24 10
PA17D21 10
PA17D22 10
PA17D23 10
PA17D24 10
T18A11 23
T18A12 23
T18A13 23
TA18A11 23
TA18A12 23
TA18A13 23
C21E11 14
C21E12 14
C21E13 14
C21E14 14
C21E22 14

Admiral, Cont.

C21E23 14
C21E24 14
C21E25 14
C21F42 5
C21F43 5
CA21E11 14
CA21E12 14
CA21E13 14
CA21E14 14
CA21E22 14
CA21E23 14
CA21E24 14
CA21E25 14
CA21F42 5
CA21F43 5
CH21F52 19
CH21F53 19
CH21F54 19
CHA21F52 19
CHA21F53 19
CHA21F54 19
L21E22 14
L21E23 14
LA21E22 14
LA21E23 14
LH21F32 19
LH21F33 19
LH21F34 19
LHA21F32 19
LHA21F33 19
LHA21F34 19
T21E11 14
T21E12 14
T21E13 14
T21E21 14
T21E22 14
T21E23 14
T21F32 5
T21F33 5
TA21E11 14
TA21E12 14
TA21E13 14
TA21E21 14
TA21E22 14
TA21E23 14
TA21F32 5

Admiral, Cont.

TA21F33 5

Crosley Corp.

DC-10B 31
DC-10M 31
AC-11B 27
AC-11M 27
AH-11B 27
AT-11B 27
AT-11M 27
DC-11B 31
DC-11M 31
BC-12BZ 31
BC-12M 31
BC-12MZ 31
BT-12BZ 31
BT-12M 31
BT-12MZ 31
DC-12M 31
DT-12B 31
DT-12M 31
BC-13B 31
BC-13M 31
BT-13B 31
BT-13M 31
DC-13M 31
DT-13B 31
DT-13M 31
BC-14M 31
DC-14M 31
BC-15M 31
DC-15M 31
DC-16B 31
DC-17B 31
DC-18N 31
DC-19N 31
488 27
489 31
490 31
493 31
494 31

DuMont Labs.

RA-380 39
RA-381 39

Emerson Radio

1212 61
1213 61
1214 43
1215 43
1216 43
1217 43
1218 43
1219 43
1224 43
1225 43
1226 43
1227 43
1228 61
1229 61
1232 47
1233 47
1238 61
1239 61
1244 61
1245 61
1246 61
1247 61
1254 51
1255 51
1258 51
1259 51
1264 51
1265 51
1268 51
1269 51
1272 61
1273 61
1274 61
1275 61
1280, 1281 66
2034S 57
2038S 57
2040S 57
2042S 57
2056 57
2057 57
2058 57
2059 57
2060 57
2061 57
2062 57

Emerson, Cont.

2063 57
2064 51
2065 51
120322V 43
120323T 43
120329V 43
120330T 43
120331H 47
120332R 47
120341H 51
120342R 51
120343E 57
120344G 57
120345E 57
120345V 57
120346V 57
120347H 51
120348R 51
120351E 61
120352G 61
120353E 65
120354G 65
120358H 51
120359R 51
120360E 66
120361G 66

General Elect.

M3 Line 67
Q2 Line 75
T Line 79
U2 Line 85
9T001 79
9T002 79
14P1209 75
14P1210 75
14P1211 75
14P1212 75
17P1329 67
17P1330 67
17P1331 67
21C1540 85
21C1541 85
21C1542 85
21C1550 85
21C1551 85

(Index continued on page 192)

INDEX Continued

Hoffman
MARK 5 93
419,-U 93
420,-U 93
B3081 93
M3081 93
P3081 93
W3081 93
M3181 93
SP3181 93
B3191 93

Hotpoint Co.
MM Line 97
T Line 79
9S101 79
9S102 79
17S301 97
17S302 97

Motorola
17T27CH 105
17T28-1,+ 105
Y17T27CH 105
Y17T28-1+ 105
A21C5B,M 115
A21F6W 115
A21K54B,M 115
A21K56B,M 115
A21K57B,M 115
A21K57MCH 115
A21K58B,M 115
A21K59M,+ 115
A21K60B,M 115
A21K61+ 115
A21K62M 115
A21K63CW 115
A21K67 115
A21T33+ 115
A21T35B,M 115
A21T36B,M 115
YA21C5B 115
YA21C5M 115
YA21F6W 115
YA21K54+ 115
YA21K56+ 115
YA21K57+ 115
YA21K58+ 115
YA21K59+ 115
YA21K60+ 115
YA21K61+ 115
YA21K62M 115
YA21K63CW 115
YA21T33+ 115

Motorola, Cont.
YA21T35+ 115
YA21T36+ 115
A24K14B,M 115
A24K15M 115
A24T6B,M 115
YA24K14+ 115
YA24K15+ 115
YA24T6B,M 115
TS-422 105
TS-422Y 105
TS-539,-Y 115
TTS-539 115
VTS-539 115
WTS-539 115

Muntz TV
724 Types 135
727 Types 135

Olympic Radio
DA 139
DAU 139
DB 139
DBU 139
DF 139
DFU 139
1CA70/U 139
1CB71/U 139
1CB72/U 139
1CB77/U 139
1KA80/U 139
1KB87/U 139
1KB88/U 139
1TA60/U 139
1TB61/U 139
4CF75/U 139
4CF76/U 139
4KF84/U 139

Philco Corp.
7H20 143
7H20U 143
7H22 143

RCA Victor
17S7090,U 149
17S7092,U 149
17S7093,U 149
17S7099,U 149
5377 149
5378 149

Sylvania Elec.
1-525-1,-2 157
1-525-2 157
14P101 157
14P201 157

Westinghouse
H14T170 161
H14T171,A 161
H14T172,A 161
H14T198 161
H14T199 161
H14TU170 161
H14TU171 161
H14TU172 161
H14TU198 161
H14TU199 161
H17T175,E 161
H17T176,E 161
H17T177,E 161
H17T237C 161
H17T238C 161
H17T239C 161
H17TU175 161
H17TU176 161
H17TU177 161
H17TU237A 161
H17TU238A 161
H17TU239A 161
H21K111A 167
H21K112A 167
H21K112B 167
H21K113A 167
H21K113B 167
H21K114B 167
H21K115 167
H21K116 167
H21K185+ 167
H21K186+ 167
H21K187A 167
H21K187B 167
H21K187L 167
H21K188 167
H21K189 167
H21K194 167
H21K194C 167
H21K194L 167
H21K194N 167
H21KR113A 167
H21KR113F 167
H21KR114A 167
H21KR114F 167
H21KR115A 167
H21KR116A 167
H21KR188+ 167
H21KR189+ 167
H21KR190+ 167
H21KR191+ 167
H21KRU190 167
H21KRU191 167
H21KU111A 167
H21KU112A 167
H21KU112B 167

Westinghouse+
H21KU113A 167
H21KU113B 167
H21KU114A 167
H21KU114B 167
H21KU115 167
H21KU115A 167
H21KU116 167
H21KU116A 167
H21KU185 167
H21KU185A 167
H21KU185B 167
H21KU186+ 167
H21KU187 167
H21KU187A 167
H21KU187B 167
H21KU194 167
H21KU194A 167
H21KU194B 167
H21KUR188 167
H21KUR188+167
H21KUR189+167
H21KUR190+167
H21KUR191+167
H21T101B 167
H21T107A 167
H21T107B 167
H21T108A 167
H21T108B 167
H21T180+ 167
H21T181A 167
H21T185 167
H21TR181+ 167
H21TR182+ 167
H21TR183+ 167
H21TR184+ 167
H21TR188 167
H21TR188+ 167
H21TR189C 167
H21TRU181A through H21TRU189A all on 167
H21TU101A 167
H21TU107A 167
H21TU107B 167
H21TU108A 167
H21TU108B 167
H21TU180 167
H21TU180A 167
H21TU180B 167
H21TUR181+167
H21TUR182+167
H21TUR183+167
H21TUR184+167
H21TUR188A 167
H21TUR189A 167
H24K126B 167

Westinghouse+
H24K126E 167
H24K127B 167
H24K128B 167
H24KR126A 167
H24KR126F 167
H24KR127F 167
H24KU126B 167
H24KU127B 167
H24KU128B 167
V-2311 161
V-2321 161
V-2346 167
V-2347 167
V-2356 167
V-2357 167
V-2370 161
V-2380 161

Zenith Radio
15Z30 179
15Z31 179
16Z25,-U 175
17Z30 179
17Z31 179
17Z32 179
17Z33 179
17Z34Q 179
19Z32 179
22Z30 179
Z1510L 175
Z1511B 175
Z1512J 175
Z1812RZ 179
Z1817+ 179
Z1819JZ 179
Z2221RZ 179
Z2223+ 179
Z2229RZ 179
Z2230+ 179
Z2243+ 179
Z2244+ 179
Z2249+ 179
Z2251+ 179
Z2257+ 179
Z2282+ 179
Z2359+ 179
Z2360RZ 179
Z2675+ 179
Z3000+ 179
Z3001+ 179
Z3004+ 179
Z3008+ 179
Z3010+ 179
Z3012+ 179
Z3014+ 179
Z4000+ 179
Z4006+ 179

Another

Supreme Publications

Service Manual

Supreme Publications are Available at All Leading Parts Jobbers