THE PROFESSIONAL MAGAZINE FOR ELECTRONICS AND COMPUTER SERVICING

ELECTRONIC T.M.

Servicing & Technology

July 1999

Digital television update

An RCA/GE update

Electronics servicing chemicals

Let's do things

U.S. $3.50

ONE CALL DOES IT ALL

We deliver what you need, When you need it.

You can count on Philips Smart Parts

Increase profits with Philips Smart Accessories

Your One-Stop Shop for Replacement Parts, Accessories, and Service Aids.
Call 800-851-8885 or fax 800-535-3715.

Let's make things better.

PHILIPS

Circle (58) on Reply Card

THE PROFESSIONAL MAGAZINE FOR ELECTRONICS AND COMPUTER SERVICING

ELECTRONIC Servicing & Technology

Volume 19, No. 7 July, 1999

Contents

FEATURES

DEPARTMENTS

page 22

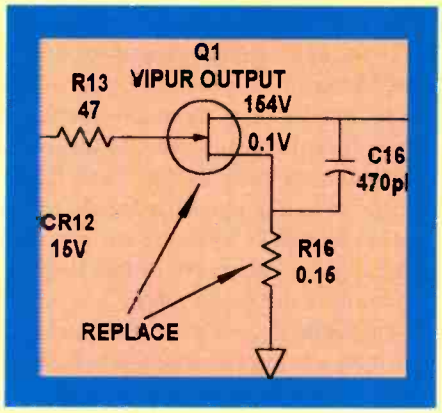

page 48

page 53

ON THE COVER

Many service procedures require the use of chemicals. Sometimes, a control needs a shot of cleaner/lube to keep it from sticking or causing noise. On other occasions, a technician might need to cool a component to see if heat is causing it to malfunction. Then, of course, those mechanical parts in a VCR, or camcorder may need cleaning and/or lubrication from time to time. A technician needs to use care in choosing the chemicals he uses in servicing to make sure that they're both safe and effective. (Photo courtesy Philips)

HDTV

Technology of all kinds makes this age in which we live one of quite amazing wonders. Ages ago, it seems now, motion pictures were invented. Of course, at that time, they were without sound, and another, musical, invention was required to give them some kind of voice, the piano. Then Edison invented sound recording. It wasn't too long before the two technologies were combined, and the "talkies," were born.

Over the years, the visual content of the motion pictures was improved: color was added, then the screen was widened. Color was improved. Some improvement was made to the sound of motion picture films, but it was only within the past few decades that real efforts were made to make film sound better in fidelity, then stereo was added, then surround sound. Today, the sound content of motion pictures is every bit as important as the visual content, and in some pictures, seems to be even more important.

Home entertainment seems to have followed suit, to a great extent, evolving from small screen monochrome television sets with pitiful sound to full-blown home theater systems with high-fidelity surround sound that can make the viewer feel as though he's joining the astronauts on a flight to the moon, or that there is a dinosaur in the living room.

The technology is wonderful, and without it we wouldn't have access to the broad range of information and entertainment choices that we do. But there is, of course, something equally important to the technology in achieving these experiences: the content, the programming. No one goes to the movie theater to sit there in the silent dark. No one buys a large-screen TV with stereo surround sound to have it sit in the living room looking impressive.

And as the entire consumer electronics and home entertainment community learned, consumers don't buy technologically-advanced entertainment products just because they're technologically-advanced. Not too many years ago, videocassette recorders featuring VHS technology virtually buried VCRs featuring Beta technology, even though Beta was more technologically-advanced, simply because far more program content was available on VHS.

Those facts, and that lesson, have not been lost on the organizations that are working together to introduce high-definition television (HDTV). There's a keen awareness that if there is no high-definition programming, consumers are going to be reluctant, to say the least, to spend many thousands of dollars for an HDTV receiver. Consequently, many companies and organizations are working alone, together, and in groups to make sure that there will be plenty of high-definition content to help consumers justify their purchase of high-priced, high-definition TV sets. Here are a few of the activities that are going on along those lines.

In an announcement on May 11, 1999, for example, the Consumer Electronics Manufacturers Association (CEMA) released this statement: "Mitsubishi's announcement that it will underwrite the conversion of CBS' prime time line-up to HDTV is great news for the industry and consumers. DTV products are widely available and more than 50 broadcasters have started digital transmissions. At this stage, quality HDTV content is critical to the digital transition — it's going to drive the next stage of the evolution.

"Consumers are 'wowed' by the technology and nearly 26,000 consumers have bought a DTV. But all of our research tells us that their purchase decisions are driven largely by content. Our industries must work together to ensure that DTV consumers have something to see.

The partnership between Mitsubishi and CBS represents the kind of inter-industry cooperation that is critical to the success of DTV. To foster this cooperation, CEMA has scheduled a DTV summit (September 28) in Los Angeles to address the issues surrounding DTV content and ensure a broad range of HDTV program options for consumers."

In another story from CEMA, for the first time ever on March 2, 1999, four major industries banded together to focus on business issues necessary to bring digital TV (DTV) to the American consumer. More than 300 people attended the fourth DTV summit, which was sponsored by CEMA, in conjunction with the Association for Maximum Service Television (MSTV), the National Association of Broadcasters (NAB), the National Cable Television Association (NCTA), and the Satellite Broadcasting and Communications Association (SBCA). The one day Summit featured leaders from the consumer electronics, broadcast, cable, and retail industries discussing their latest plans for the DTV transition.

"HDTV is here, and while this is a gradual transition, the momentum is building," said Gary Shapiro, President of CEMA.

"Consumers marvel at HDTV's stunning picture and sound quality. Equally marvelous is that the conversion to DTV makes it possible for TV stations to upgrade and transition the American public's free and universal community-based TV system into the new millennium," said Margita White, President, MSTV.

Broadcasters are ahead of schedule on rolling out their digital facilities, and now are increasingly turning their attention to providing the programs that will attract customers," said Chuck Sherman, Executive Vice President Television, NAB.

"The transition from analog to digital television promises to provide new value to consumers. Cable operators have invested $20 billion since 1996 to upgrade their facilities to deliver digital and HDTV programming, and we remain committed to providing cable customers with the programming they tell us they want. We are pleased cable networks like HBO and MSG are among the HDTV pioneers," said Decker Anstrom, President NCTA.

"We are excited by the cooperation of these four industries in striving to bring DTV to every American consumer and by the leadership CEMA has provided," noted Chuck Hewitt, President SBCA.

The sum of what all of these people were saying at the DTV Summit is that all of the industries involved in delivering the programming, the transmission system, and the receivers are aware that everything must be in place if the transition to HDTV is to be a success and that they're working together to see that it happens.

Nils Conrad Persson

THE PROFESSIONAL MAGAZINE FOR ELECTRONICS AND COMPUTER SERVICING

ELECTRONIC Servicing & Technology

Electronic Servicing & Technology is edited for servicing professionals who service consumer electronics equipment. This includes service technicians, field service personnel and avid servicing enthusiasts who repair and maintain audio, video, computer and other consumer electronics equipment.

EDITORIAL
Nils Conrad Persson, *Editor*
(Internet e-mail: cpersedit@aol.com)
Alycia Nicholsen, *Associate Editor*
(Internet e-mail: AlyciaEST@aol.com)
Richard S. Moseson, W2VU, *On-Line Coordinator*

CONSULTING EDITORS
Homer L.Davidson, *TV Servicing Consultant*
Victor Meeldijk, *Components Consultant*
John E. Shepler, *Audio Consultant*
Sam Wilson, *Electronics Theory Consultant*

PRODUCTION
Elizabeth Ryan, *Art Director*
Barbara McGowan, *Associate Art Director*
Edmond Pesonen, *Electronic Composition Mgr.*
Dorothy Kehrwieder, *Production Manager*
Emily Leary, *Assistant Production Manager*
Pat Le Blanc, *Phototypographer*

BUSINESS
Richard A. Ross, *Publisher*
Sal Del Grosso, *Accounting Manager*
Ann Marie DeMeo, *Accounting Department*
Judith Erickson, *Office Manager*
Catherine Ross, *Circulation Manager*
Melissa Gilligan, *Operations Manager*
Jean Sawchuk, *Data Processing*
Denise Kells, *Customer Service*

ADVERTISING SALES OFFICE
Kaprelian & Company, Inc.
521 Illinois Avenue, St. Charles, IL 60174
Tel.: 630-584-5333 Ext. 10 • Fax: 630-584-9289

Bill Kaprelian, *Director of Advertising*
Emily Leary, *Sales Assistant*

EDITORIAL CORRESPONDENCE:
P.O. Box 12487
Overland Park, KS 66212
913-492-4857

ETA Electronics Technicians Association

National Electronics Service NESDA Dealers Association, Inc. Member, Electronic Servicing Dealers Association

Electronic Servicing & Technology (ISSN 0278-9922) is published 12 times a year by CQ Communications, Inc. 25 Newbridge Road, Hicksville, NY 11801. Telephone (516) 681-2922. Periodical class postage paid at Hicksville, NY and additional offices. Subscription prices (payable in US dollars only): Domestic—one year $26.95, two years $49.95. Canadian—one year $36.95, two years $69.95. Foreign Air Post—one year $44.95, two years $85.95. Entire contents copyright 1999 by CQ Communications, Inc. Electronic Servicing & Technology or CQ Communications, Inc. assumes no responsibility for unsolicited manuscripts. Allow six weeks for delivery of first issue and for change of address.
Printed in the United States of America.

Postmaster: Please send change of address notice to Electronic Servicing & Technology, 25 Newbridge Road, Hicksville, NY 11801.

CQ Communications, Inc. is publisher of CQ The Radio Amateur's Journal, Popular Communications, CQ Radio Amateur (Spanish CQ), CQ VHF, CQ Contest, and Electronic Servicing & Technology.

Home theater sales exceed $10 billion

Custom installation sales provide 40 percent of the home theater market

The Consumer Electronics Manufacturers Association (CEMA) and the Custom Electronics Design & Installers Association (CEDIA) announce the results of a joint survey on the home theater industry, showing estimated home theater sales to have reached $10.64 billion in 1998.

"Home theater is a growing trend with American families. Already, 20 percent of U.S. households own a home theater system as compared to just 4 percent five years ago," said Gary Shapiro, CEMA president. "Home theater provides a valuable entertainment outlet that's enjoyable for the whole family and lets them participate in an activity together."

The survey also points out the healthy business custom installers bring to the home theater industry. Roughly 40 percent of home theater sales is sold through custom installation sales, and more than 80 percent of manufacturers support custom installers, either through technical support, dedicated product lines, and/or marketing assistance.

"Custom installers are a vital piece of the home theater industry. They help bring the excitement and enjoyment of the movies into people's homes, while integrating the equipment with their lifestyles and home decor," said Billilynne Keller, CEDIA executive director. "More than 700 installers are working throughout the country to help families bring new entertainment options home."

Home Theater Market

- "Out the Door" Retail Sales 60%
- Custom Installation through Retail Stores 26%
- Dedicated Custom Installers without a Traditional Retail Storefront 14%
- Manufacturers Supporting Custom Installation Support, Custom Installation Technical Support 82%
- Exclusive or Dedicated Product/Line for Custom Installation 68%
- Marketing Assistance Programs for Custom Installation 50%

The survey results represent input from a wide cross-section of the home theater industry, from manufacturers of audio and video equipment to control systems and software to custom installation and accessory products. Companies selected for polling include CEMA Home Theater Subdivision members and 1998 CEDIA Expo exhibitors.

CEDIA is the international association of professionals who create high quality, home electronic systems for the discerning consumer. CEDIA provides education, develops the industry, and creates demand and profitability within the marketplace. Since being founded in 1989, membership has grown to more than 1,500. Members are established, insured businesses with bona fide qualifications experience in this specialized field.

CEMA debuts Integrated Home Systems website

Consumer site provides insight on growing category

During the opening of the International Consumer Electronics Show, on January 8, 1999, CEMA's Integrated Home Systems division launched TechHome.org, a new Website designed to serve as the consumer resource for information on the growing home systems industry.

"The home networking and integration industry is exploding," said Gary Shapiro, CEMA President. "Our research indicates that a majority of consumers are interested in this growing category of products. TechHome.org will help build consumer awareness and understanding of these products."

The information on TechHome.org was compiled from CEMA industry research, input from the industry itself through home systems manufacturers, and the work of leading home systems industry experts. "TechHome.org successfully leads consumers from a home systems introduction through the advanced concepts," said X-10 president and CEMA Board Member, Pete Lesser. "It fulfills the need for an organized and comprehensive body of information on our industry, presented in language consumers can understand. The Web is the ideal medium for reaching consumers with this type of information."

TechHome.org is divided into five areas of home systems: Environmental Control and Energy Management; Security and Access Control; Audio/ Video Entertainment; Voice and Data Communication; and Lighting and Window Treatments. Each of these areas contains a detailed explanation of how home systems can work together, increasing their efficiency and effectiveness.

The "How To" section of the site describes the various integration methods and how to get started. Things like wire types, communications standards, and the various kinds of controllers are explained here. A links page invites consumers to visit related sites for more information or check out specific products on manufacturers' sites. Links to IHS manufacturers are divided into the five home system categories so consumers can easily find the type of product they are looking for.

Future plans for the site include additional links from manufacturers' sites and continuous updates as new products and categories emerge. CEMA encourages home systems buffs and the uninitiated to visit TechHome.org often for the latest industry information.

CEMA survey finds high consumer awareness of home systems' comfort, safety, and entertainment benefits

Interest in advanced automation and integration features also strong

Nearly three-fourths of American adults are aware of home systems and a majority are interested in owning products that use technology to manage a wide range of tasks, according to a new survey by the Consumer Electronics Manufacturers Association (CEMA).

"A growing number of Americans are discovering the convenience and safety of home systems and would like to have them available in their homes," said Gary Shapiro, CEMA President.

CEMA's survey of 1,000 randomly selected households found that a majority of those polled are interested in automated security features, such as lighting that comes on when someone approaches their homes (63%) or warns them when appliances are left on (55%).

Features that enhance the comfort and energy-efficiency of homes also ranked high among respondents. Products, such as separate thermostats for each room, and water heaters that automatically adjust themselves to save energy, attracted interest from more than half (55%) of the survey participants.

The entertainment features of home systems also struck a favorable chord with respondents. Fifty-eight percent of those surveyed expressed an interest in wireless speaker systems and 54 percent indicated some interest in the ability to listen to music throughout the house. Additionally, the CEMA survey found that one in three people would like to see who is at their front door on a wireless handheld device the size of a remote control. More than half (53%) of those questioned are interested in checking on their homes remotely using a cellular or standard telephone. Almost one third (30%) would like to use the Internet to monitor their homes, while 36 percent want their homes to e-mail them at work about happenings like deliveries and children arriving at home.

"Demand for home systems will continue to increase as awareness among consumers grows," Shapiro noted. "For example, home security system sales are projected to be $1.65 billion in 1999, a 49 percent increase over the past five years. Other home system products are showing even stronger sales growth."

The survey was conducted through the CEMA Consumer Research Service. EIA/CEMA Market Research Department Staff designed the survey with input from CEMA members.

The telephone survey was administered to a random national sample of 1,000 U.S. households during July and August 1998. Copies of the report are available free to CEMA members at <www.cemacity.org/mall/research/>. Non-members can call CEMA for ordering information at 703-907-7764,or E-mail to mktrsrch@eia.org

Industry Forum Addresses Convergence

CEMA Members Convene to Discuss Connectivity, Demo Convergence Technologies

Industry leaders met in Arlington, Virginia, on March 30, 1999, to discuss convergence trends in the consumer electronics, telecommunications, and computing industries and how they are impacting manufacturers, retailers, and consumers. The Convergence Forum, hosted by the Consumer Electronics Manufacturers Association's (CEMA) Communication and IT Products (CIT) Division and Integrated Home Systems (IHS) Division, took place at the Electronic Industries Alliance (EIA) Spring Conference held there through March 31.

Speakers at the forum addressed a range of convergence issues, including its impact on manufacturers' selling cycles, products and services, changing retail needs, and consumer acceptance. The session, attended by more than 100 industry representatives and government officials, included several from the Federal Communications Commission (FCC), featured speakers from consumer electronics and IT manufacturing, market research, and retail. A demonstration of convergence technologies and products followed the discussion.

(Continued on page 56)

Dealing with noise and ground

by Alvin G. Sydnor

Noise is usually considered to be disturbing, irritating, and unwanted sound, and to the electronic technician and engineer, it is considered to be random, with little or no periodicity. This does not completely define noise since there are certain noises that are associated with certain commonplace events such as motor hum, lawn mowers, foot steps on a hard surface, etc. Electronic noise is an unwanted signal.

The fact that electronic equipment can be a source of noise is well-known and can cause much difficulty. Many electronic technicians and engineers have, at some time, given considerable thought to noise reduction, and there are some who have not bothered to inquire into the nature of internal generated noise.

Nature of electrical noise

Electrical noise has the characteristic of being un-pitched or non-periodic. This feature distinguishes noise from other types of interference, such as hum, oscillation, and spurious modulation. Noise voltage is spurious and is composed of large numbers of narrow pulses of different amplitudes which occur at random frequencies. Ignition interference consists of separately recognizable sharp pulses, and random noise is composed of rapid successive pulses that overlap.

The term "noise-figure" (NF) is used to compare the amount of noise generated in one instrument or system with the amount generated in another. In order to calculate the noise figure, it is necessary to measure the signal to noise ratio (SN) at both the input and the output of the device or system under test. It is difficult, however, to measure the noise at the output because of the presence of the signal. This is especially true when the signal is large.

Because the noise present at the input is also amplified by the instrument under test, the signal-plus-noise to noise ratio is often used instead of the signal-to-noise ratio. The signal-plus-noise to noise ratio depends on the gain of the device under test. It is common practice to express the noise figure (NF) in decibels:

$$NF_{dB} = 10\log_{10}NF$$

Either the S+N/N ratio or the noise figure may be used when comparing the performance of an amplifier to itself when trying to improve a circuit's performance.

Syndor is a retired consumer electronics servicing technician.

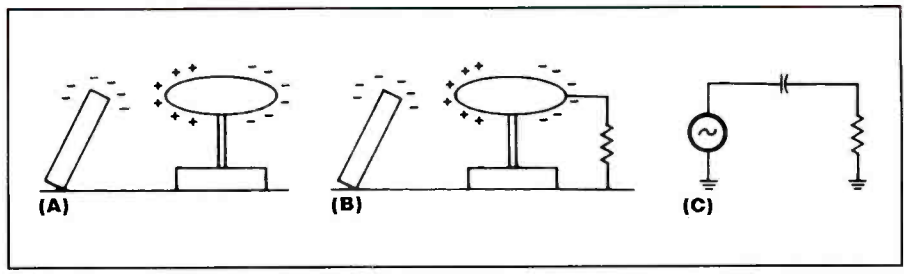

Figure 1. When a negatively charged body is brought close to a conductor, it induces a charge in the conductor (A). If the other end of the charged conductor is attached to ground through a resistor, the excess electrons flow to ground and voltage is developed across the resistor (B). This voltage is, in effect, a noise signal. (C) The equivalent circuit that represents the physical situation.

Thermal noise

Thermal noise is also often refereed to as *Johnson noise*. It was in 1928 that J.B. Johnson established quantitative values for thermal noise. The random motion of free electrons in conductors produces minute voltages across the terminals of the conductor that are continually changing in character and amount. Since the motion of the electrons is due to temperature, these potentials are said to be the result of thermal agitation. Thus, the noise figure is directly proportional to temperature and to bandwidth. It is also proportional to the resistive component of the impedance across which the noise voltage is developed.

Johnson noise can be at any frequency. The amount of Johnson noise that appears at the output is directly proportional to the frequency bandwidth of the instrument and absolute temperature of the conductors. Higher temperatures cause more electrons to move, thus causing the Johnson noise to increase. This type of noise can never be completely eliminated, but it can be reduced by limiting the bandwidth of the electronic circuitry.

Noise inherent in the vacuum tube

Within the past several years, vacuum tubes have re-surfaced as an acceptable quality component in audio amplification. The demand for tube amplifiers for the guitar player and home stereo systems has convinced manufacturers to introduce new designs, as well as re-issue some of their original vacuum tube designs.

There are several types of noise generated in the vacuum tube that contribute to the overall noise in an amplifier. These can be divided into several categories:

- shot noise
- induced grid noise
- partition noise
- secondary emission noise
- 1/f noise
- noise from anomalous sources

As electrons are emitted from the cathode of a tube, a cloud of electrons is formed in the vicinity of the cathode. The density of this cloud is increased when the cathode temperature is elevated. This electron cloud is not uniform since some of the electrons emitted have considerably more energy than the others.

With voltages applied to both the filament and plate, some electrons are accelerated toward the plate, but they do not arrive at precisely the same instant. The arrival of the electrons at the plate may be likened to the firing of a shotgun at a barn

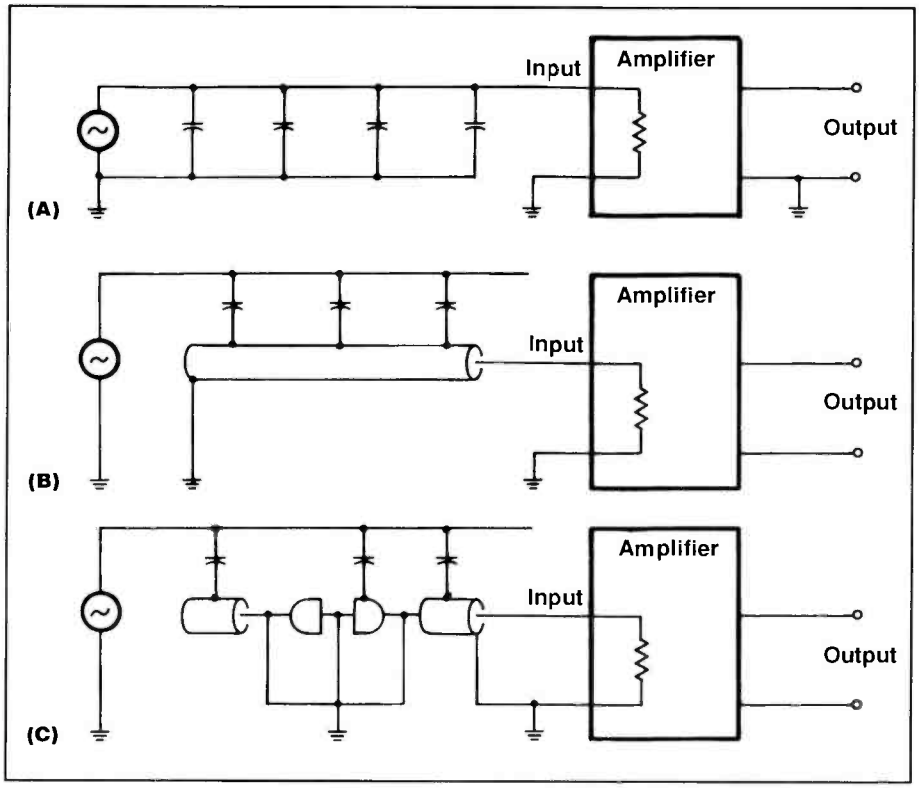

Figure 2. When the input wire to a circuit is not shielded, the electrostatic signal is coupled directly to the wire (A). When the wire is surrounded by a shield and the shield is grounded, the excess electrons travel directly to and from ground (B). In (C), a plug is used to connect one part of the input lead, a phono-pickup, as an example, to the wire leading into the amplifier itself.

door. Not all the shot arrives at the same time-instant, nor is it uniformly distributed. The failure of all the electrons to arrive at the plate simultaneously gives rise to what we call *shot noise*.

This type of noise has a fairly broad frequency spectrum. Like Johnson noise, it may be reduced by limiting the frequency response of the amplifier, or by heating the filaments of the vacuum tube with a low-ripple, highly-regulated dc power supply, or in some cases a battery. Shot noise can never be completely eliminated, especially in the low frequency range.

Induced grid noise is caused by the motion of the electrons past the grid. The electrons induce a charge on the grid that results in a slight current flow in the grid-cathode circuit. The result is a small amount of noise that is not significant below 15 MHz and is consequently not important in most audio amplifiers.

Likewise, *partition noise* is caused by slight fluctuations in the potential of grids other than the control grid, such as in a tetrode or a pentode. As electrons pass these other grids, the partition noise is generated. When the moving electron strikes the plate, it may cause emission of secondary electrons from the plate itself, thus giving rise to *secondary emission* noise. Shot noise, induced grid noise, partition noise, and secondary emission noise are very similar. The total RMS noise is the sum of the RMS of each individual type of noise.

A noise, called *1/f noise*, is known as flicker-noise, which is the result of a non-homogeneous potential distribution over the cathode surface so that spontaneous bursts of electrons are boiled off; these electrons arrive at the plate and appear as a signal. The term 1/f noise arises from analogy to an uneven burning of a material that causes the flame to waver unsteadily. Cathode noise or 1/f noise decreases in amplitude with increasing frequency. It is an important source of noise because it occurs at low frequencies. This type of noise can be minimized by operating the tube at a lower filament voltage than specified.

Some well-designed and expensive low-noise amplifiers employ a separate high-quality power supply that delivers minimum ripple with good regulation and operates at about 50 to 75 percent of the rated filament voltage. It is especially important that the first one or two stages of amplification generate a minimum of noise because the noise in each stage is amplified as if it were a signal.

Other noise sources

There are several other causes of noise in vacuum tubes, such as the presence of a minute amount of gas in the tube. These gas molecules are likely to be present in a new tube. Proper aging of a tube helps to eliminate these gas molecules. Another source of noise is a loose mechanical structure within the tube that causes increased noise when the tube is moved or jarred. This is called microphonic noise because it acts like a microphone. There are some tube types that are especially sensitive to movement, shaking, or even acoustic pressure. Such tubes are *microphonic* and should be replaced, especially in the first two stages of amplification. Some amplifiers use shock-mounted tubes in preamplifier stages to avoid this problem.

Noise inherent in other components

Almost every component used in electronic circuitry generates some noise. In some cases, changes in temperature alter the properties of a component. This is especially true of resistors. In other cases, small undetectable shorts develop that change the value of the component and generate noise. The transformer is especially sensitive to the electric and magnetic fields that are close or surround it.

Each component has its own problems, but modern technical advances have improved almost every variety of electronic component. A good example is the introduction of the metal film resistor. These high-quality resistors change value less than one part per million per degree C of temperature change. This means that a 1MΩ resistor changes its resistance less than 1Ω per degree C of temperature change. It is always important to use high-quality resistors, even though they're expensive, in at least the input stages of any high-gain amplifier.

Noise inherent in semiconductors

The source of noise in the semiconductor is very similar to that in vacuum tubes. There are basically three sources of noise in semiconductors: Johnson noise, shot noise, and 1/f noise. Johnson (thermal) noise is due to the random motion of elec-

trons or holes and is present whether an electric field is present or not. The frequency spectrum of Johnson noise is very broad. When viewed on an oscilloscope, Johnson noise looks like grass, and it is often called just that. Johnson noise is not confined to semiconductors.

Shot noise in semiconductors is very similar to that in vacuum tubes, except that the emission of electrons is not confined to the cathode but may occur anywhere in the crystal structure, but it cannot occur if voltage is not applied. Shot noise in transistors and diodes is caused by the carriers' drift or diffusing through the semiconductor.

In semiconductors, 1/f noise requires the presence of an electric field. The amplitude of the 1/f noise is inversely related to frequency and is, on the whole, the noise that occurs over and above shot and Johnson noise.

Electrostatic interference

When a negatively charged body is brought close to a conductor, it induces a charge in the conductor as illustrated in Figure 1. If the other end of the charged conductor is attached to ground through a resistor, the excess electrons flow to ground, and voltage is developed across the resistor. This voltage is, in effect, a noise signal. Figure 1C is the equivalent circuit that represents the physical situation shown in Figure 1B. The charged rod is the generator and the left plate of the capacitor. The charged conductor is the right plate of the capacitor. Thus, the signal from the generator passes through the capacitor and the resistor to ground.

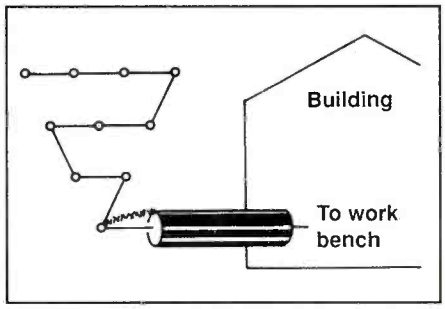

Figure 3. An ideal way to provide a suitable ground is to dig holes in the earth about 10 feet deep and lay in several copper rods about 1 to 2 inches in diameter. Each rod should be placed several feet from the others. All rods are connected together with a large-core coaxial cable with the shield and inner wire connected together and run to the building.

In actual electronic circuitry, the charged rod generator can be compared to any source of voltage, such as stray pickup by wires running within the unit. All wires and long cables connected to the input circuit are the most active parts of the circuit in generating noise because they are usually unshielded, and in addition, the noise is amplified by all stages. Careful placement of wires within any circuit is necessary to avoid noise.

Electrostatic interference can be substantially reduced by properly shielding the input and other parts with metal screen, mesh, or foil that is properly connected to a very low resistance ground. This precaution will prevent or reduce electrostatic fields from affecting the sensitive high gain circuits.

Figure 2 illustrates the principle of electrostatic shielding. When the input wire is not shielded, the electrostatic signal is coupled directly to the wire. However, when the wire is surrounded by a shield and the shield is grounded, the excess electrons travel directly to and from ground, as illustrated in Figure 2B. In Figure 2C, a plug is used to connect one part of the input lead, a phono-pickup, as an example, to the wire leading into the amplifier itself. Even though both sections of wire are shielded, if the plug is non-metallic or un-grounded and even though it is only 1/4 inch long, noise will be capacitively coupled to the input circuit, thus eliminating the effectiveness of the shielded wires.

Electromagnetic interference

A wire that carries current generates a magnetic field. Similarly, when a time-varying magnetic flux crosses a wire that is part of a circuit, current flows in the wire. This current is not due to any useful signal and is therefore, noise. Electromagnetic interference may be compared to a transformer in which the current-carrying noise generator is the primary coil, and the conductors making up the instrument correspond to the secondary coil. In this analogy, the core material of the transformer is air.

Circuits and parts of circuits sensitive to electromagnetic interference are shielded in much the same way they are for electromagnetic interference, except that the shield must be a material that has high magnetic permeability, such as iron or a special alloy called Mu-metal. The magnetic shielding should then be grounded at a common point so that it also serves as electrostatic shielding.

Finding magnetic interference

If there is a source of magnetic flux that is not visible, in or near any amplifier or other high-gain equipment, a search coil can be used to locate the source. Simply wind a small coil of about 100 turns of very fine insulated magnet wire on the end of an insulated rod or wood dowel with the coil ends connected to a shielded cable that is connected to a sensitive oscilloscope input. The search coil is then pointed in and around various spots within and around the unit under test. The signal viewed on the scope will be greatest when the open side of the coil is pointing in the direction of the source of the magnetic field, which will be 90 degrees to the magnetic flux.

Establishing a good ground in your work area

The electronic technician must always make sure a good ground is provided.

This ground must never be confused with what the architect and electrician call ground. This means that electrostatic shields must be provided with an extremely low resistance path to earth. By taking this precaution, excess electrons can travel to and from the earth, which acts like an infinitely large source of electrons and also an infinitely large sink into which electrons can flow.

This is not as easy as it sounds. Most technicians will depend on the cold water plumbing, supposedly metallic and connected to outside water pipes, that are sunk into the earth below the water level. Often cold-water pipes and radiators do not provide a low enough resistance path to ground. The result is that they may even generate additional noise because of hidden ground loops, thus passing noise on to the amplifier or other instruments.

A good ground may be where the main water pipe enters the building. If this is to be used as a ground, a large core coax cable, such as RG83U, which is a 14-gauge wire insulated with a thick plastic coating and a closely woven electrostatic shield. Both the shield and the core are to be securely attached to the water pipe by brazing or by a very low resistance mechanical connector.

The ground connection must be attached to the pipe on the street side of the water intake pipe because the inside is often insulated from the outside with a gland and a gasket. The technician is encouraged to determine which side of the water pipe has been used to establish an electrical ground in the building.

Dealing with water pipes as ground is often acceptable, but its always best to make sure you have a good low noise (low resistance) ground. An ideal way to provide a suitable ground is to dig holes in the earth about 10 feet deep and lay in several copper rods about 1 to 2 inches in diameter. Each rod should be placed several feet from the others. All rods are connected together with a large-core coaxial cable with the shield and inner wire connected together and run to the building, where you can use your new solid ground, Figure 3.

In most industrial electronic laboratories, it is sometimes necessary to isolate the 60Hz house current from the outside power transformer to avoid the transfer of noise. This is accomplished by using a large shielded isolation transformer.

Once a good ground has been established, that point is chosen as a reference. A sensitive ac voltmeter with a sensitivity of at least 1mV full scale, and preferably battery-operated, is connected from the reference ground point to the chassis of the instrument under test. The shielded leads from the voltmeter to the chassis must be kept as short as possible. The voltage, with the instrument off or on, should be no more than 1mV. If you measure any voltage greater than 1mV, a new reference ground point must be selected. The best reference point is the one that yields the lowest voltmeter reading.

No matter how hard you try when dealing with grounds and ground loops, there will always be a certain amount of luck and patience involved, and this is not a perfect world. ■

Digital television update

by John A. Ross

In 1998, this magazine presented a brief overview of the technical specifications that define high-definition television. As time has passed, the number of television stations broadcasting digital signals has increased to more than fifty in 29 major U.S. cities. The fifty stations cover nearly 50 percent of the 98 million households who regularly view television programming. Broadcasting signals in a digital format eliminates ghosts, picture noise, and other types of terrestrial interference.

Digital television covers eighteen different transmission formats. Within the scope of digital television, six formats are defined as high-definition television because of improvements in the resolution quality. With the increase in digital broadcasts, the availability of HDTV products — such as integrated HDTV receivers, set-top boxes, and HDTV displays — has also increased.

National availability of digital television signals

Digital TV signals are now available in these cities: Atlanta, Boston, Dallas, Detroit, Los Angeles, New York, Philadelphia, San Francisco, Washington, D.C., Houston, Seattle, Portland, Charlotte, Raleigh, Cincinnati, Milwaukee, Columbus, Harrisburg, Honolulu, Madison, Indianapolis, Pittsburgh, Hartford, Kansas City, South Bend IN, Jackson MS, Cleveland, Minneapolis, Chicago, Orlando, Phoenix, and Tampa. By November 1999, HDTV signals will be available in Denver, Portland, Sacramento, San Diego, St. Louis, Miami, and Baltimore.

The obstacles

Despite this good news, consumer acceptance of digital television products has been slow to materialize for several reasons. Integrated HDTV receivers continue to carry a price that ranges from a low of $5,000 to above $7,000. HDTV-compatible set-top boxes cost around $650. Even without the high prices, many consumers indicate that the resolution given by current television standards remains satisfactory. Along with those factors, the lack of HDTV programming has affected the market. However, the effect of the last factor has begun to change through the cooperation of the major networks, cable services, satellite operators, and the Public Broadcasting Service. All have broadcast portions of their schedule in the digital format.

Set-top boxes

Even with the production of digital-signal-compatible televisions, one obstacle to consumer acceptance is the inability of those televisions to directly receive digital signals from the set-top converter boxes that are installed in more 65 percent of American households. To receive HDTV signals, consumers will need to invest in an old technology: UHF antennas attached to their televisions. Some cable companies plan to offer digital signal-ready set-top boxes. However, a retail price of $1000–$3000 per box has again slowed customer acceptance of the digital receivers. In addition, large-scale availability of set-top boxes that have the integrated circuitry needed to decipher high-definition signals will not exist for at least another year. The following is a rundown of some of the company alliances that are working on set-top boxes:

• *Scientific Atlanta, Kaledia, and Motorola*: Scientific Atlanta will provide the hardware for the box, while Motorola

1080i Interlaced Scanning: In interlaced scanning, the electron guns draw only half of the horizontal lines with each pass: every other line. In one pass, the guns draw all odd lines, while the next pass draws all even lines. A full screen with every other line drawn is called a *field*. One complete *frame* of information is created for every two fields scanned. With one field generated every 1/60th of a second, the human eye cannot discern the scanning motion. To compensate for any possible flicker, manufacturers of interlaced scanning displays choose phosphors that have a higher decay time.

Because interlaced scanning refreshes only half the lines at one time, it can display twice as many lines per cycle. Thus, the display technique provides an inexpensive method for yielding more resolution. Interlaced scanning has a relatively slow trace and retrace time that affects the ability of a display to show animations and video graphics.

720p Progressive Scanning: With progressive scanning, every line of information on the display is scanned by the electron gun at each pass across the panel. The lines are transmitted from top to bottom. The technique enhances the vertical resolution of the display, while allowing the viewer to sit closer to the display and provides an image quality close to the quality seen with 1080 lines of resolution. Viewing distances with progressive scanning shorten to 2.5 times the height of the display. Progressive scanning allows the transmission of 24 frames per second and—as a result—the squeezing of more channels into available bandwidth.

480p Standard Definition Television (SDTV): SDTV uses progressive or interlaced scanning to scan 480 lines, one after the other onto the screen. Because of the lower number of horizontal lines, the SDTV format does not require large amounts of bandwidth. The SDTV format allows the transmission of multiple programs in the space traditionally used by one channel or the transmission of data services within the band allocation. Up to four SDTV programs may be broadcast from one station simultaneously. SDTV programs will have better resolution than standard NTSC broadcasts and will be free of interference.

Figure 1. A comparison of the digital television broadcast formats.

Ross is a technical writer and microcomputer consultant for Ft. Hays State University, Hays, KS.

Here are the URLs:
Panasonic: http://www.panasonic.com/consumer_electronics/tv/dtv_converter.htm
Philips: http://www-us.sv.philips.com/newtech/wst.html
Samsung: http://samsungelectronics.com/nonjava/product/spotlight/hdtv/
Sharp: http://www.sharpelectronics.com/main.asp?sect=1&pageid=ABE
Sony: http://www.sel.sony.com/SEL/consumer/wega/products/kw34hd1.html
Zenith: http://www.zenith.com/main/cool/hdtv.html

Figure 2. You can find out more about the HDTV products of some of the consumer electronics manufacturers by visiting their websites.

will manufacture the integrated circuitry. Kaleida is providing the operating system and user interface.

• *Silicon Graphics, Scientific Atlanta, and Toshiba*: Silicon Graphics manufactures the RISC-based MIPS R4000 processor and the operating system and user interface software. While Scientific Atlanta provides the box, Toshiba will offer most of the integrated circuitry.

• *General Instruments and Microsoft*: General Instruments manufactures the box, while Intel supplies a special low-cost processor that has an EPROM executable core. Microsoft Windows and DOS run on the embedded processor.

• *Hewlett-Packard:* Hewlett-Packard will design and manufacture the open architecture set-top boxes.

• *CLI and Philips:* While Broadband Technologies will provide the transport structure for the set-top box, Compression Labs Incorporated will manufacture the encoder technology. The box will utilize Philips decoder technologies.

Must carry

The FCC requirement that cable operators "must carry" high-definition television signals has also created an obstacle. Although major cable companies have a commitment to HDTV programming, bandwidth problems occur. The transmission of HDTV signals at a resolution of 1080 lines and 600 pixels requires a bandwidth of 18MHz, rather than the 6MHz currently used for standard television broadcasts. Accordingly, some cable companies may have little choice but to drop cable-ready channels in an effort to release space for the digital signals.

Conflict over the choice of format

Differences of opinion over the preferred format of television broadcast signals also cloud the picture. CBS, NBC, and PBS have aligned themselves with a High-Definition Television format that provides 1080 lines of resolution and uses interlaced scanning to display images. ABC, Fox Broadcasting, and many cable operators support a digital format that provides 720 lines of resolution while using progressive scanning. Microsoft and a consortium of computer companies prefer a standard definition television format that provides 480 lines of resolution, scanned one after the other onto the screen. Figure 1 compares digital television broadcast formats.

International digital television formats

Along with the different format preferences seen with domestic television broadcast providers, still another difference exists on the international scene. In the United States, the FCC established a rulemaking committee called the Advanced Television System Committee (ATSC). In addition, the FCC decided that new HDTV signals would be broadcast on currently unusable channels and that broadcasters would be temporarily assigned a second channel for the transition to high-definition television.

The United States, Canada, and Mexico cooperated in the development of the ATSC standard for HDTV and have been quick to adopt the standard for broadcast transmission. In addition, Argentina, South Korea, and Taiwan have adopted the ATSC standard. Other countries considering the adoption of the ATSC standard include most — if not all — of Central and South America, and Russia.

Despite the acceptance of the ATSC standard by those and other nations, other countries have either adopted proprietary standards or have chosen the DVB standard presented by European companies. The Digital Video Broadcasting, or DVB,

project began in 1993 with the signing of an agreement by 85 European companies. After evaluating both transmission standards, Australia opted for the DVB standard rather than the ASTC standard.

Japan has announced plans to implement its own digital television standard by 2003, while China has tested a digital television format the combines the ATSC and DVB standards. In the early 1980s, the Japan Broadcasting Corporation, or NHK, proposed the MUSE HDTV interlaced system that would use 1,125 scan lines and introduced it as a possible world standard. With this proposal, NHK established a goal of high-definition television playing on a wide screen format.

Product overview

Consumer electronics product manufacturers offer a number of HDTV products. The following items describe one of the products offered by each of the companies named. You can find more information about each company and its products by visiting their website. The URL (uniform resource locator) of each of these websites is provided in Figure 2.

Panasonic

Panasonic introduced its TU-DST50 DTV Decoder Set-Top Box in October 1998. The TU-DST50 answers many of the HDTV compatibility concerns by receiving and decoding all ATSC formats by allowing the viewing of digital programming on analog and digital compatible televisions. In addition, the Panasonic Set-Top Box has the capability to downconvert high-definition signals to a standard definition or NTSC format. The TU-DST50 has a 6-channel digital audio output, an S-video output, and an RF antenna input. Of particular note, the reproduction of the Dolby AC-3 audio occurs through an optical format.

Philips/Magnavox

Philips recently introduced its new Widescreen TV, as an entry line for the digital television market. Taking advantage of the new high-definition standards, the Philips product uses an aspect ratio of 16:9, rather than the 4:3 aspect ratio seen with the traditional NTSC format. To compensate for programs received in the NTSC format, the Widescreen TV uses a new feature called Movie Expand. With this, Philips expands the 4:3 ratio so that it completely fills the 16:9 screen from side to side and upward and downward. Circuitry within Widescreen Plus rebuilds any lost scan lines from memory. As a result, no part of the picture is lost during playback. Titled Movie Expand, another new feature, allows the placement of the televised image so that subtitles or titles appear.

Samsung

Samsung recently introduced a 55-inch digital/HDTV projection television. The new product has a 16:9 widescreen display that supports all 18 ATSC video formats, including the highest-possible resolutions, such as the 1920 x 1080 interlaced scan and the 1280 x 720 progressive scan. In addition, Samsung provides a graphical, on-screen control.

Sharp

Sharp has produced the TU-DTV1000 DTV Set-Top Box. The TU-DTV1000 receives digital transmissions and converts all eighteen digital formats to the standard television format. In addition, the Sharp product decodes and outputs digital television broadcasts with Dolby Digital Audio. The SharpVision DTV Decoder also provides three high-quality component video outputs that allow the connection of the set-top box to Sharp LCD projectors or new direct view televisions.

Sharp also offers the 64LHP5000 Rear Projection HDTV and the 64LHP4000 Widescreen HDTV-ready Rear Projection television. The company plans to release a wide range of digital signal ready set-top boxes, projection systems, and direct view televisions by the end of 1999. The 64LHP5000 and 64LHP4000 (when used with a decoder) can receive an input from a satellite system or cable company proprietary digital converter.

Sony

Sony has introduced the 34-inch Widescreen KW-34HD television that accepts the HDTV, SDTV, and NTSC broadcast transmission formats. The Sony product includes component video inputs and a Dolby Digital Decoder. The television offers Widescreen Modes, such as Zoom, full, Wide Zoom, Caption, and Normal. Sony's product offering carries a suggested retail price of $8,999.99.

Zenith

With the PRO9000X, Zenith offers a high-resolution (1920 x 1080 HDTV, 1024 x 768 Data) projection television that features three 7-inch high performance liquid cooled tubes. The Zenith product uses a number of features, such as two IR receivers on the projector for front and rear remote access, full menu control, remote control of convergence with installation transmitter, operator remote point and click track ball, and Microsoft (mouse emulation). In addition, the projector has RGB inputs, composite video input, an S-video input, and an RS232 data communication port.

The HDTV timetable

Although the transmission of television programming in a digital format may be occurring in your city, the introduction of the new television standard is a gradual process. As the timetable shows, the digitally-formatted broadcast signals are available in major cities. All stations will broadcast programs in both the analog and digital formats by 2005.

- April 1997 — FCC allocates digital channels for broadcasters.
- November 1998 — More than 40 stations begin digital broadcasts into the top ten television markets.
- May 1999 — Simulcast of half of analog programming must occur on the digital television channels in the ten largest markets.
- November 1999 — Network stations in the next twenty largest markets must begin broadcasting in the digital format.
- May 2002 — All remaining commercial stations must begin broadcasting in a digital format.
- 2003 — Non-commercial stations must broadcast in a digital format.
- 2004 — Stations must broadcast three-quarters of their analog programming on the digital channels.
- 2005 — Stations must broadcast all programs in both analog and digital formats.
- 2006 — Subject to FCC review, stations must cease broadcasting in an analog format. ■

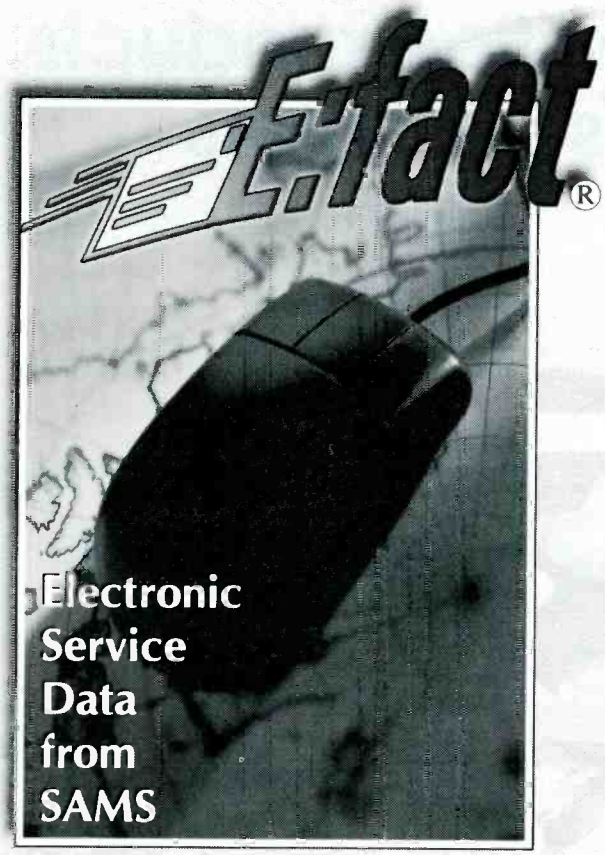

A customer just brought in a TV set for which you have no repair documentation. They need the set back ASAP! What do you do?

The answer is simple! Log on to **www.hwsams.com** and order **E:fact®**! You'll have what you need in a day!*

*See Our Website For Important Restrictions and Requirements.

Each E:fact® Electronic Service Data includes the following features:

- SAMS Standard-notation schematics drawn by signal flow
- Source voltage locations
- Waveforms for important test point locations
- Detailed parts lists for major components
- Placement charts showing active component location
- Hot-link features that help you navigate the documents

"Sams is to be congratulated on the advent of E:fact®. While OEMs either just talk about electronic service data, ignore electronic service data, or create electronic service data schemes that are not cost effective for the consumer electronics marketplace, Howard W. Sams has taken action and delivered the goods. Bravo!
— Paul R. Gendreau, Jr. - KDTV Software Technical Support, Aurora, IN

"I got the E:fact®...thank you very much.....this is the best thing that Sams has done since the first photofact...I've been waiting for this technology to be used for a long time."
— Richard Holliday - Mexico Electronics, Mexico, NY

"Good work! The schematic is very clear."
— Chuck Biddinger - Electronic Repair Company, Birmingham, AL

All for only $10.95
***Available only at* www.hwsams.com**
Electronic Service Data from SAMS

A **Bell Atlantic** Company
Howard W. Sams
1.800.428.SAMS

Circle (71) on Reply Card

Servicing home office products: laser printers

by John A. Ross

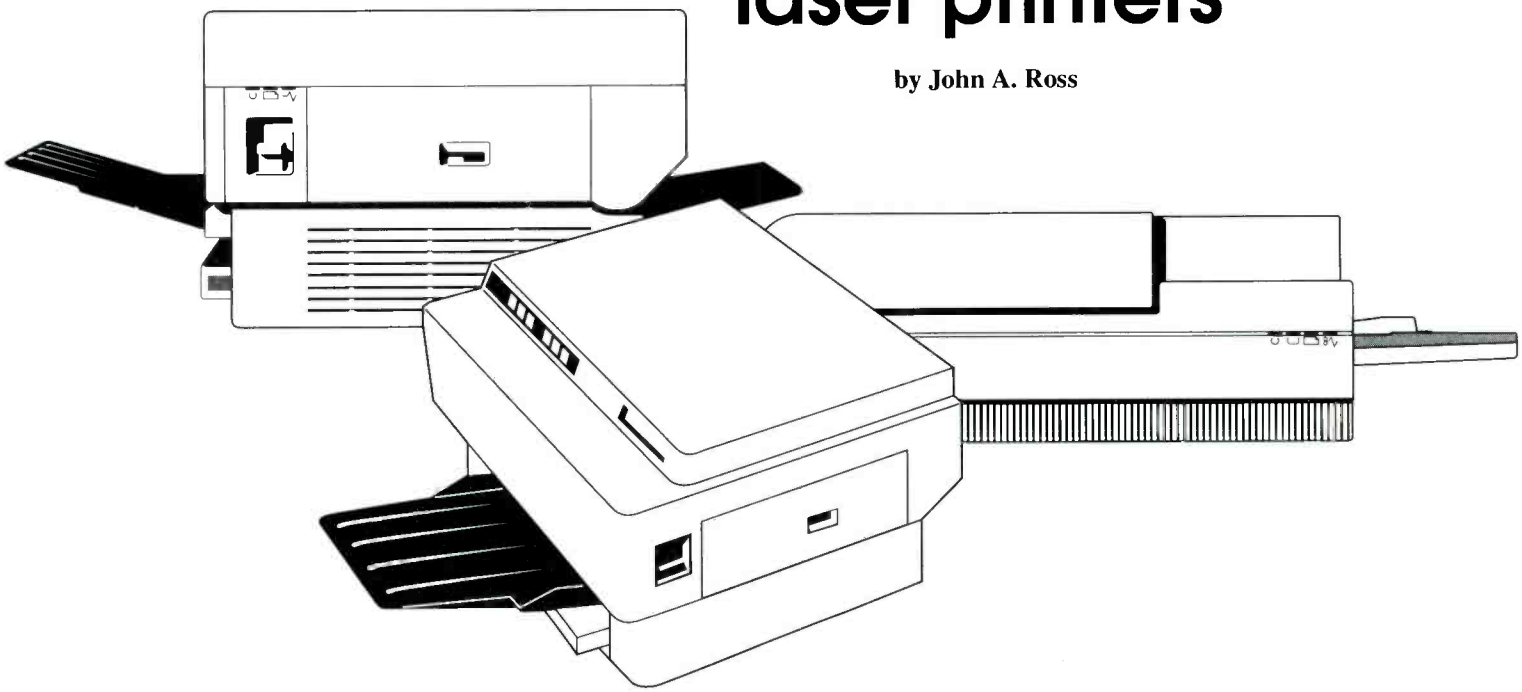

In many of the articles that I've written, I've talked about the need to diversify in terms of the types of products that we service. That need becomes more apparent everyday, as we see products that had provided income for our service businesses evolve into throw-away technologies. We only need look as far as VCRs and smaller televisions to find evidence of this trend.

Techniques for servicing laser printers

This article will explore techniques for servicing an increasingly common home office product: laser printers. While servicing these products may not seem glamorous, the wide use of laser printers in schools, businesses, public offices, and homes can create a profitable niche for a service business. The similarities between laser printers and other technologies allow service businesses to enter this niche without spending large amounts of money for training, service equipment, or tools.

Some common parts

Before we take a look at the sub-systems that make up a laser printer, we should consider some of the common types of parts seen in the equipment. Generally, line-operated laser printers get their power from switch-mode power supplies. The entire high voltage power supply for a laser copier or laser printer typically consists of the switch-mode power supply, a primary corona, and a primary corona grid. While the primary corona deposits negative charges on the surface of the drum, the grid ensures that the negative charges distribute evenly to the drum surface.

Ross is a technical writer and microcomputer consultant for Ft. Hays State University, Hays, KS.

"This article will explore techniques for servicing an increasingly common home office product: laser printers."

Control circuitry

The dc control circuitry within the printer or copier uses the available power supply voltages to coordinate all electronic and mechanical operations during the printing process. Figure 1 depicts the dc voltage distribution for a laser printer. The dc control circuitry drives the laser beam, matches dot pattern data with the proper paper size, and monitors drum sensitivity and laser beam motion information.

In addition, the control circuitry controls and monitors paper motion, the high voltage system, the fuser assembly temperature, erase lamps, and all the motors. Figure 2 shows a block diagram of the dc control system.

Microprocessor control

Due to the need for easily-operated programmable customer controls, visual displays, and increased functionality, laser printers include a microprocessor, ROM, static RAM, dynamic RAM, and peripheral circuits, such as timing controllers, I/O controllers, and interfaces. The microprocessor and associated circuitry accomplish the following tasks:

- page formatting;
- storing font information;
- storing configuration information;
- monitoring control panel keys; and
- displaying information on the control panel.

Figure 3 shows how the microprocessor and associated circuits interface with one another.

Transferring an image to paper

Reproducing an image with a laser printer involves the interaction of electronic circuits, optics, and electrophoto-

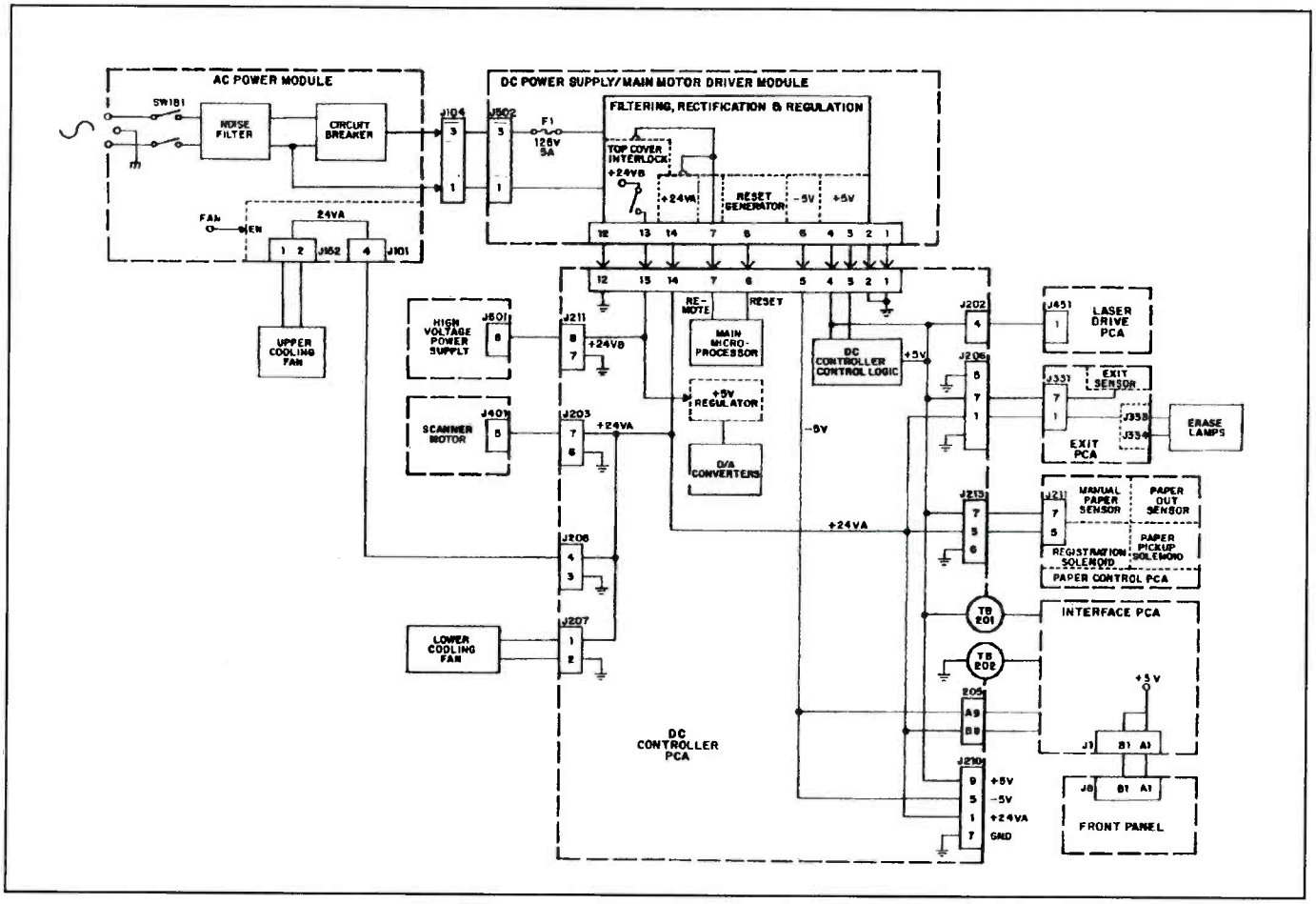

Figure 1. This is a view of the dc voltage distribution for a laser printer. The dc control circuitry drives the laser beam, matches dot pattern data with the proper paper size, and monitors drum sensitivity and laser beam motion information. In addition, the control circuitry controls and monitors paper motion, the high voltage system, the fuser assembly temperature, erase lamps, and all the motors.

graphics. Although the actual process of copying or printing a document may take less than 30 seconds, the process actually consists of six stages that involve a photosensitive drum.

The six stages involved in printing a document are:

- cleaning;
- conditioning;
- writing;
- developing;
- transferring; and
- fusing.

All components involved in the image formation process undergo wear and degradation as a result of everyday usage.

Replaceable cartridges

Laser printers rely on replaceable cartridges that contain all or most of the components that have the most wear. Shown in Figure 4, the replaceable cartridge contains a photosensitive drum, primary corona, developing station, toner cavity, and a cleansing station. Consisting of extruded aluminum and coated with a layer of organic-photoconductive material, or OPC, the photosensitive drum depicted in Figure 5 has properties that allow an image to form on the drum surface and then transfer to paper. The aluminum base of the drum connects to ground. Microswitches within the printer control laser power so that the power matches the sensitivity of the drum.

Forming an image

Every image formation process requires a stage that involves the preparation of the drum through physical and electrostatic cleaning. During the printing process, the drum constantly rotates.

Physical cleaning

Most printer and copier designs utilize a rubber cleaning blade for the scraping of leftover toner from the drum. A sweeper blade inside the debris cavity rotates and sweeps toner away from the drum.

"Laser printers rely on replaceable cartridges that contain all or most of the components that have the most wear."

In addition, erase lamps, which are usually found in the area above the drum and are synchronized by a control circuit, illuminate the photosensitive material of the drum, thus neutralizing any charges.

Electrical conditioning

After the drum cleaning stage has occurred, the printer uses the primary corona assembly and the high voltage power supply to generate a -6kVdc charge. Ionization of the air surrounding the wire allows negative charges from the wire to migrate to the surface of the drum.

Pictured in Figure 6, a primary corona grid is placed between the corona wire and the drum. As a result, a regulated volt-

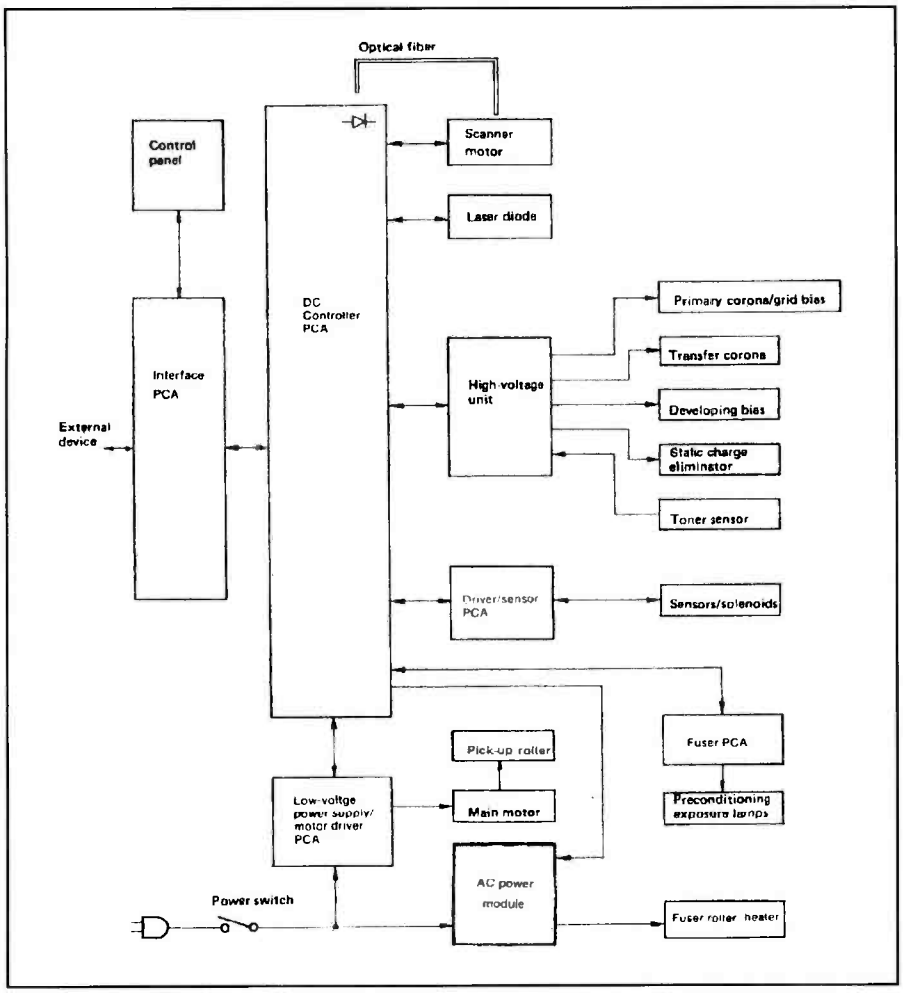

Figure 2. The dc control system of a laser printer looks like this in block diagram form.

age is applied to the drum and a uniform -600Vdc charge deposits on the surface.

Focused laser light on the drum surface discharges the negative potential in selected areas of the surface and creates an electrostatic image. As the process continues, the electrostatic image becomes a visible image. Areas of the drum surface not exposed to the laser remain at the -600Vdc charge, while areas of the drum exposed to the laser have a potential of -100Vdc.

Using laser light to create an image

The laser light used to create the electrostatic image is produced by a small laser diode. With the diode fixed in place, the turning off and on of power to the diode generates the laser. The diode beam strikes a rotating six-faced mirror.

Any beam reflected off the mirror sweeps in an arcing fashion and is focused onto a horizontal line on the drum by a set of mirrors and lenses. From there, the beam reaches the surface of the drum through an opening in the cartridge.

Covering the drum with laser light

The sweeping motion allows the beam to cover the entire length of the rotating drum. As a result, the entire surface is covered. Combining the sweeping of the drum with the modulation of the beam to expose desired areas of the drum can be compared to the sweeping of an electron beam inside a CRT as a video image forms. Within the printer or copier, the speed of a scanner motor controls the rotational speed of the six-sided mirror.

A main motor synchronizes with the scanner motor and rotates the drum. Each successive sweep of the laser beam remains offset from the drum surface by a specified fractional distance and places a series of dots in a vertical direction. Turning the beam off and on at a rate matching the fractional distance places a series of dots in a horizontal direction. The combination of vertical and horizontal dots is the dots per square inch resolution for the printer or copier. Figure 7 illustrates the relationship between the mirror, scanner motor, laser unit, lenses, and controller.

At the beginning of each sweep before the beam reaches the drum, the laser beam reflects off a small mirror into a short length of fiber optics. As a result, a momentary pulse of light travels to a dc controller circuit. A transducer in the dc controller circuit converts the electrical signal and synchronizes the output of the data for one sweep or scan line with the rest of the data.

Safety note

Laser light emitted inside a printer remains within protective housings and external covers. During normal use, the laser beam cannot escape from the machine during any phase of the operation. However, the laser beam can present a significant safety hazard during servicing procedures.

When servicing or adjusting the optical system, never place screwdrivers or other shiny objects in the path of the laser beam. Accessories, such as watches and rings, can also serve as reflectors. The invisible, reflected laser beam can permanently damage your eyes. Always follow the manufacturer's safety instructions.

Applying toner to the image on the drum

A metallic rotating cylinder and a fixed magnet that runs the length of the cylinder combine with toner powder to take the invisible electrostatic image and develop a visible image on the drum. Iron within the toner powder attracts the toner to the magnet located within the cylinder. A brush height control blade regulates the amount of toner adhering to the cylinder.

The particles of toner powder obtain a negative surface charge by rubbing against the cylinder. Because of this charge, the particles become attracted to the areas of the drum exposed to laser light and repelled from the other areas.

Applying an ac potential to the drum allows the toner particles to overcome the attraction of the magnet and pull toner back to the cylinder from unexposed areas

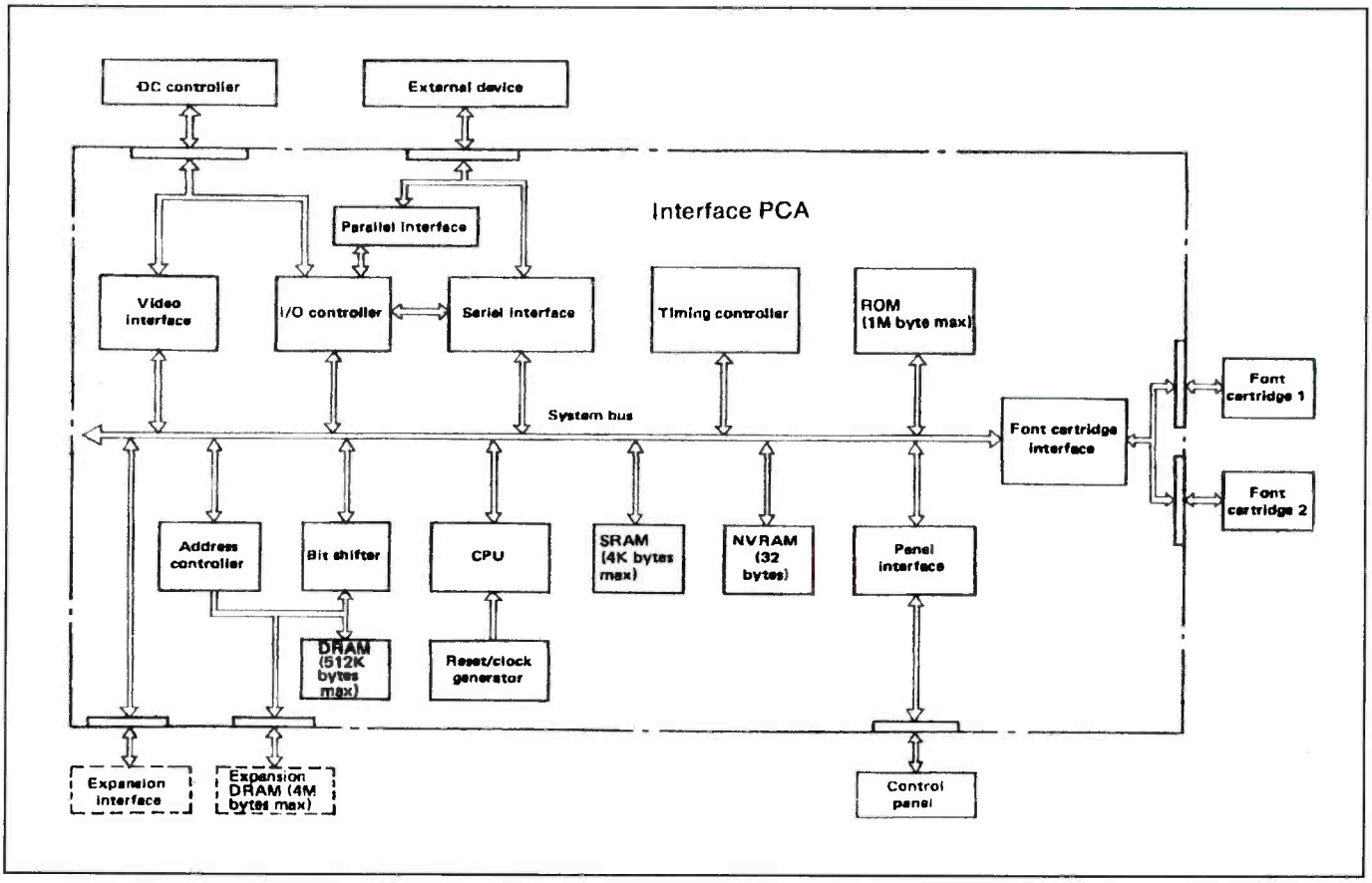

Figure 3. This drawing shows how the microprocessor and associated circuits interface with one another.

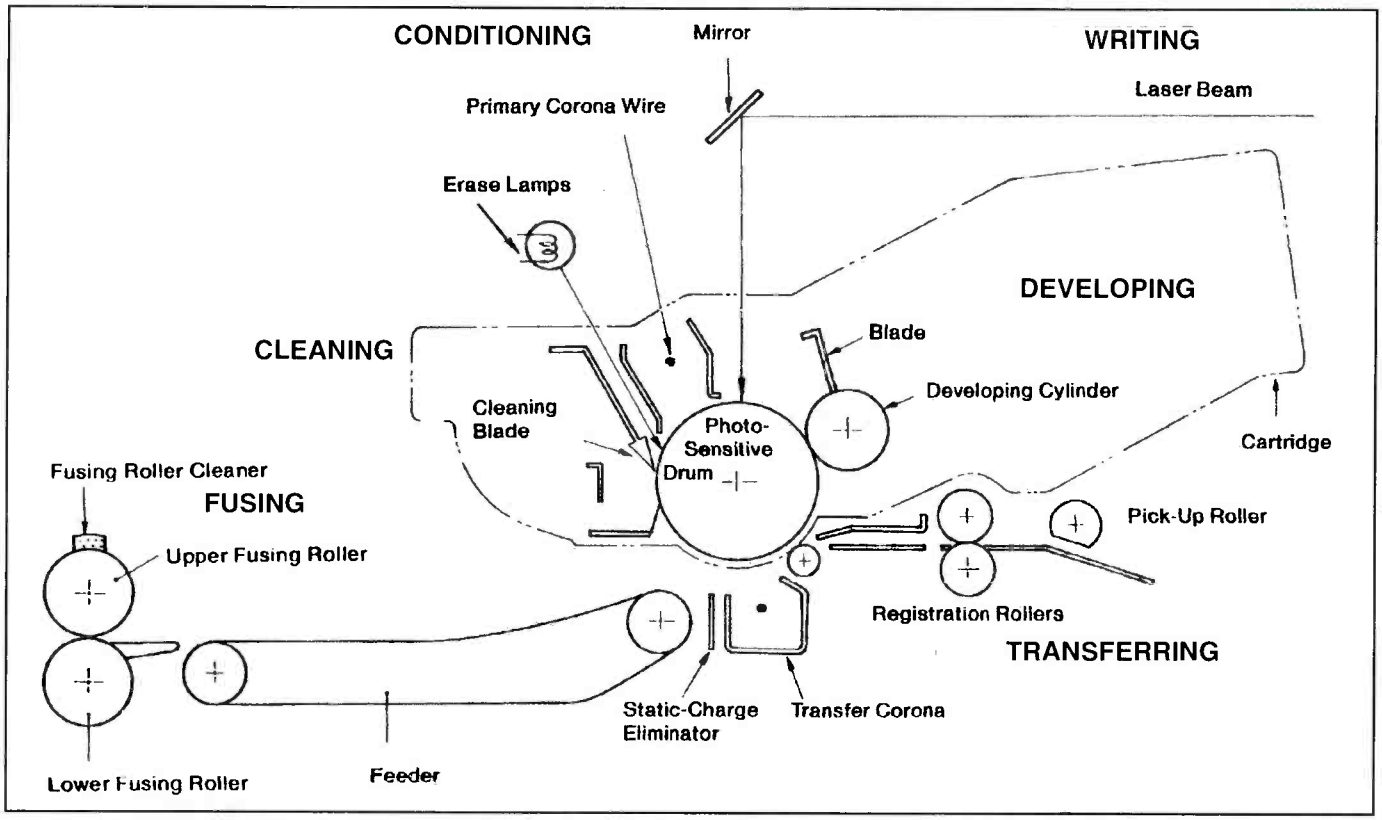

Figure 4. The replaceable cartridge in a laser printer contains a photosensitive drum, primary corona, developing station, toner cavity, and a cleansing station.

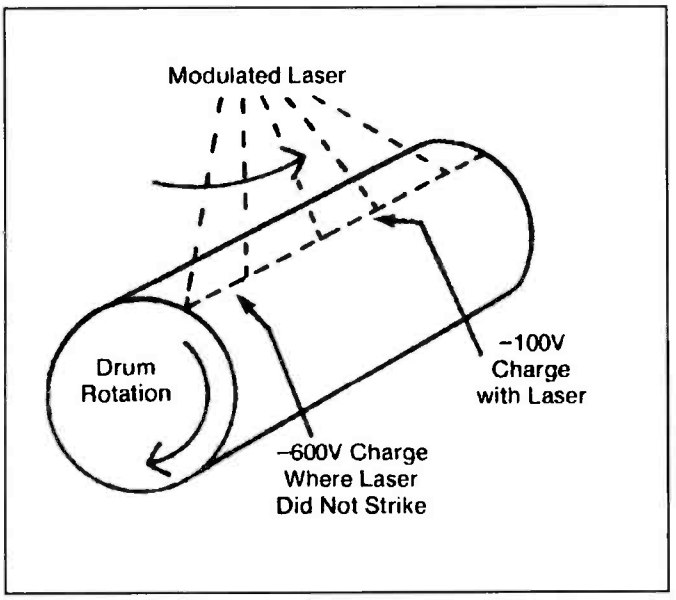

Figure 5. Consisting of extruded aluminum and coated with a layer of organic-photoconductive material, or OPC, the photosensitive drum has properties that allow an image to form on the drum surface and then transfer to paper. The aluminum base of the drum connects to ground.

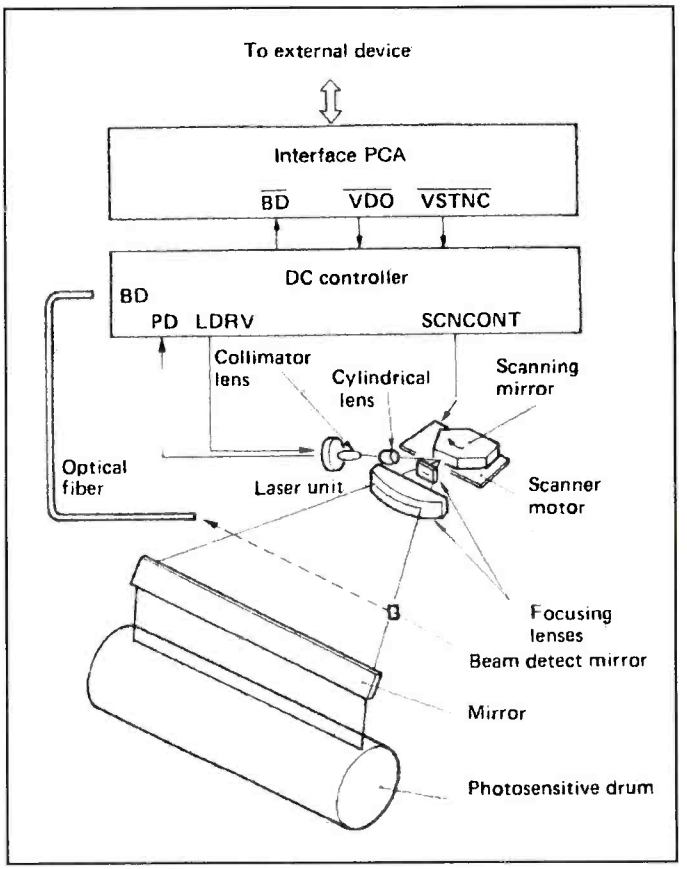

Figure 7. This drawing illustrates the relationship between the mirror, scanner motor, laser unit, lenses, and controller. →

of the drum. With this action, the density and contrast of the image improve.

Transferring the image to paper

Transfer of the image to paper occurs through the application of a positive charge to the back of the paper through a corona assembly. The strong positive charges on the paper pull the negatively charged toner particles off the drum. With the paper and drum moving at the same rate, the stiffness of the paper and the small radius of the drum allow the paper to separate from the drum. In addition to the natural separation, a high negative voltage applied to a static charge eliminator weakens any attraction between the negatively-charged drum surface and the positively-charged paper and prevents the paper from wrapping around the drum.

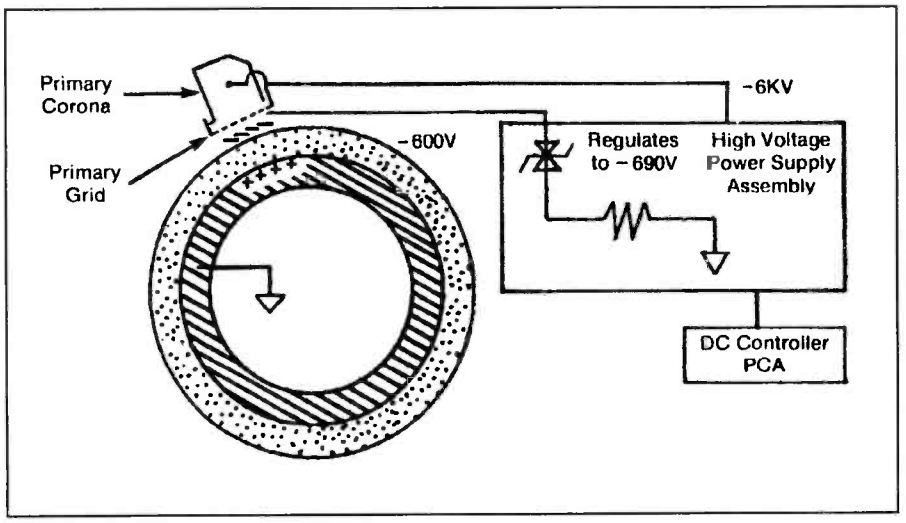

Figure 6. A primary corona grid is placed between the corona wire and the drum. As a result, a regulated voltage is applied to the drum and a uniform -600Vdc charge deposits on the drum surface. Focused laser light on the drum surface discharges the negative potential in selected areas of the surface and creates an electrostatic image.

Fusing the image

A non-stick roller heated from the inside by a high intensity lamp and a soft roller make up the fusing station within a copier or laser printer and force the toner onto the paper through melting. Without this action, the toner would simply rub off the paper. A thermistor sensing arrangement monitors the temperature of the fusing roller and maintains a temperature of 165C during standby periods and 180C during normal mode.

Summary

Because of overall price decreases, laser printers have captured a prominent place in the consumer and business marketplace. The functional description of the printing process found within a laser printer should lay the groundwork for your entry into this servicing area. Moreover, the article describes how commonly-seen electronic components function in an office equipment environment. The article also provides an overview about the uses of laser technology in consumer products. ■

Magnavox signal processor

by Steven J. Babbert

The state-of-the-art TV series continues here, with a look at the main signal processor in the Magnavox 25P506-00AA chassis. The heart of the video processor circuit is IC270, a Phillips TDA8369 CVBS processor. In addition to processing the video and chroma signals, this IC produces the AFT and AGC voltages required by the tuner, and develops the horizontal and vertical drive waveforms, and the sound IF signal.

IF amplification and demodulation

The first section of IC270 handles AFT, AGC, IF amplification, and video detection (Figure 1). The IF signal from the tuner is applied to pins 45 and 46 via Saw filter Y200. After several stages of amplification (most amplification of the video signal takes place ahead of the detector), the signal is demodulated by a video detector. While the operation of the video detector is beyond the scope of this discussion, a few words are in order. One block of the detector is a VCO (voltage-controlled oscillator), which must be properly adjusted for demodulation to take place. The VCO tank adjustment, L210, connected between pins 2 and 3, is the only component associated with the detector that is outside of IC270.

Demodulation of the IF signal produces the composite video baseband signal (CVBS). Composite video means that other components, such as sync pulses and chroma sidebands, are still mixed with the video information. Baseband means that the signal is not riding on another carrier (RF or IF). Note: in some TV systems, the luma and chroma signals are separated and processed independently. Typically, they are designated Y and C, respectively. These systems use a delay line (glass type in newer models) in the Y circuit to compensate for propagation delay of the chroma signal. In the CVBS system, an on-chip integrated CCD (charge coupled device) delay line is used. These devices were discussed in the article "Understanding comb filters," which was published in this magazine in the January 1997 issue. There is no external delay line used in this chassis.

Babbert is an independent consumer electronics servicing technician.

AFT

AFT (automatic fine tuning) compensates for effects of inaccurate cable frequencies or for channel frequency offset. If the incoming RF frequency is slightly off, the IF frequency will also be off, resulting in no color, distorted color, or beat patterns. The AFT circuit uses a discriminator or frequency selective detector to monitor the picture carrier IF frequency. Any deviation from the optimum 45.75MHz causes the circuit to output a positive or negative voltage, depending on the direction of deviation.

In many older chassis, AFT voltage was applied directly to the tuner. You will remember from previous installments of this series that the tuner in this case is controlled by the syscon via the I2C bus. Therefore, the AFT correction voltage at pin 43 of IC270 is applied to pin 19 of syscon IC345. In response to changes in the AFT voltage, the syscon will adjust the frequency of the tuner as needed.

AGC

RF AGC was discussed in the installment on the tuner. AGC is also used to control the gain of the IF section. Since sync pulse amplitude is not dependent on varying picture detail, it is a good indicator of signal strength. The basic AGC system works by comparing the sync-tip level to a reference voltage. A horizontal keying pulse "keys" the comparator on at the appropriate time. The difference in levels produces a dc voltage, which after conditioning, becomes the AGC voltage.

Because maximum gain is essential in the front end (RF amps) to ensure a high signal-to-noise ratio, a system known as RF AGC delay is used. In this system, the RF amps have maximum gain until signal strength exceeds a predetermined value. Resistor R206 adjusts the average value of the RF AGC voltage, which can be measured at Pin 49. Voltage typically ranges between 3.7V and 8.5V.

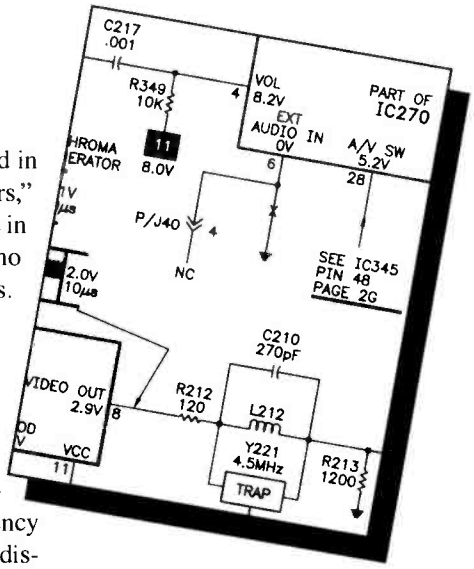

This voltage will normally be at maximum when average strength stations are tuned, or when no station is tuned (between channels). It will only begin to drop on stronger stations. The IF AGC, however, which can be measured at Pin 48 of the IC, will vary with any change in station signal strength.

Sound takeoff

The 41.25MHz sound IF signal is derived in IC270 by mixing the video and sound carriers (45.75MHz and 41.25MHz respectively). IF sound takeoff is at pin 7. The signal is routed to pin 4 of IC270 via bandpass filter Y220. This ceramic filter sharply attenuates signal components outside of the audio IF passband.

Inside the audio section of IC270, the audio IF signal is demodulated in order to recover the composite MTS (multichannel television sound) signal, which then exits pin 50 for further processing in the stereo decoder, covered in a recent installment of this series. The block containing the audio demodulator also contains the electronic switch that selects between external or internal audio. The switch control voltage from the syscon enters the IC at pin 28. This pin goes to logic low when "external" is selected.

The video signal

The video signal exits pin 8 of IC270 and is routed to video buffer Q381 via an

Howard W. Sams
2647 Waterfront Parkway, East Drive
Indianapolis, IN 46214-2041

TELEVISION SCHEMATIC

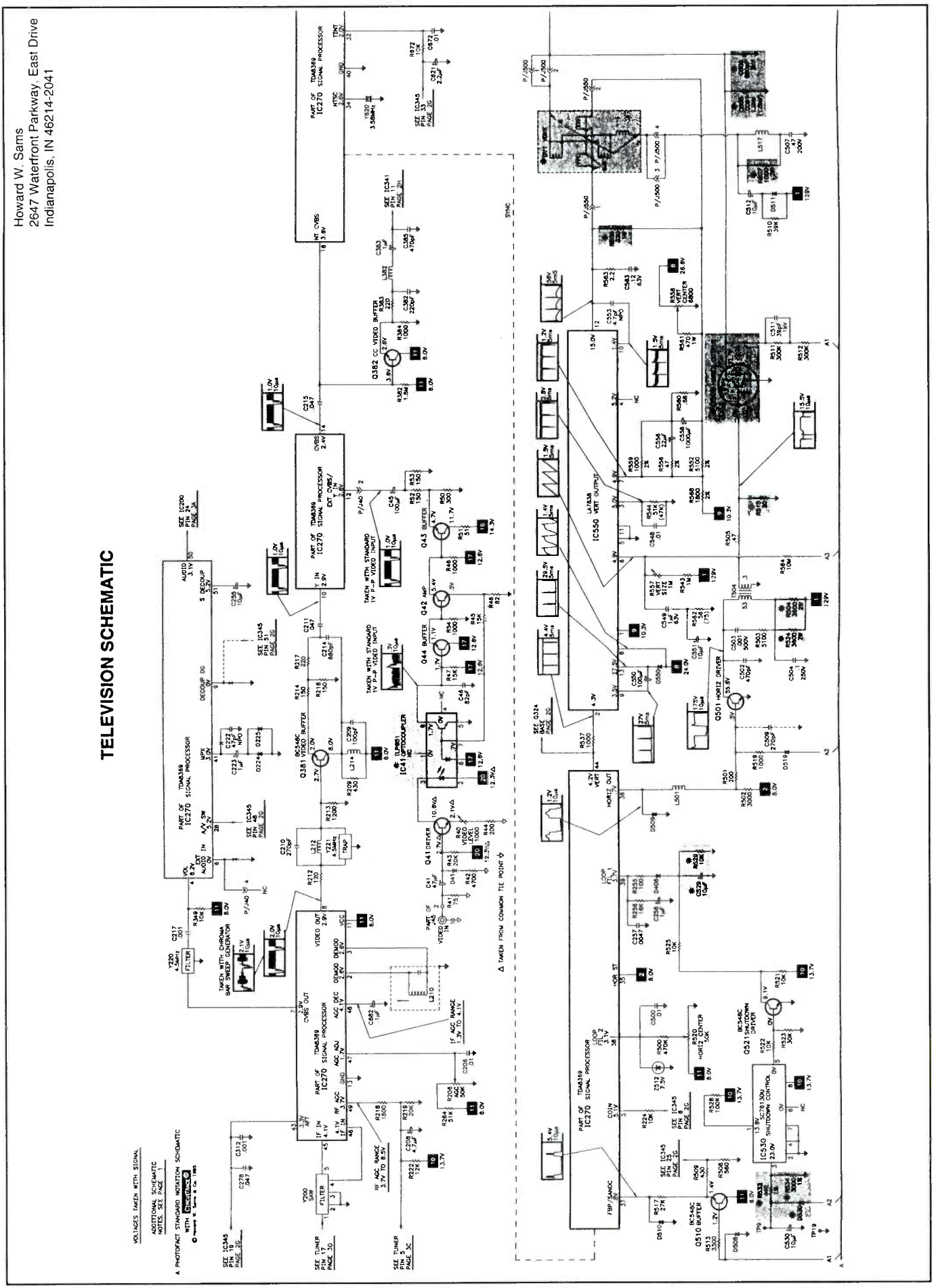

◄— **Figure 1.** The heart of the video processor circuit in the Magnavox 25P506-00AA chassis is IC270, a Phillips TDA8369 CVBS processor. In addition to processing the video and chroma signals, this IC produces the AFT and AGC voltages required by the tuner, and develops the horizontal and vertical drive waveforms, and the sound IF signal. (Schematic diagram courtesy of Howard W. Sams and Company)

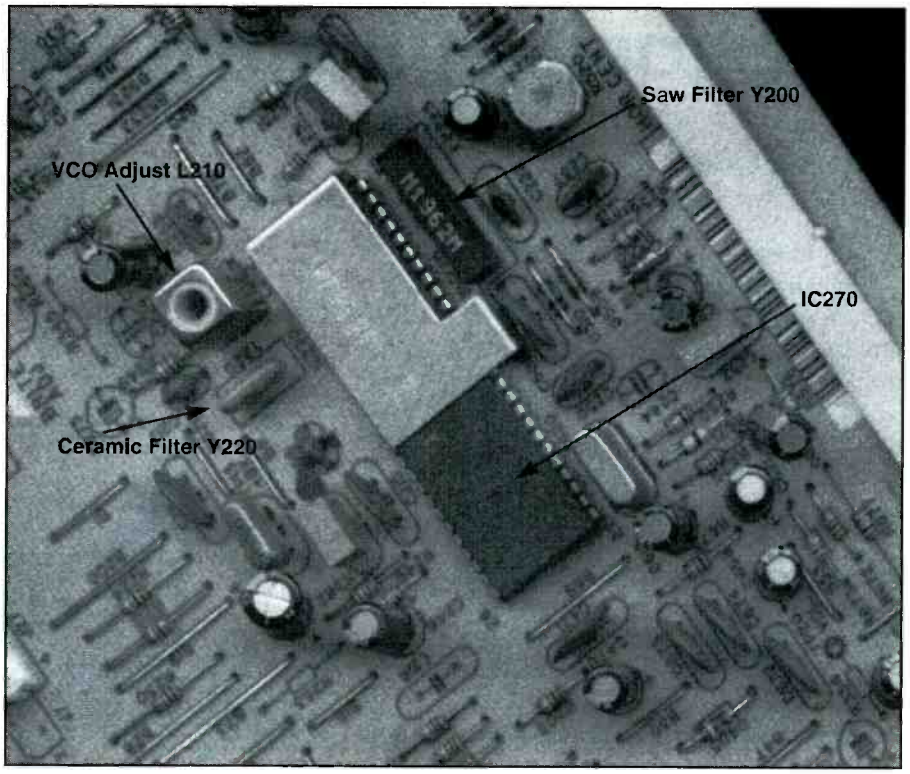

Figure 2. This photo shows the location of some of the critical components of the signal processor circuits in the Magnavox 25P506-00AA television chassis.

LC network and 4.5MHz trap Y221. This coupling network eliminates any residual sound IF carrier from the video circuits where it could mix with the 3.58MHz chroma subcarrier. Mixing these signals produces a 920kHz beat, which will be visible on the screen. The signal then enters pin 10 of IC270.

Pin 10 is one input of the internal/external switch. The external signal enters the switch at pin 12. Note that the video signal is being designated as video, Y, or CVBS at different points on the schematic. Do not be confused by this inconsistency; in all cases this is the CVBS signal. It is the same type of signal that can be found at a VCR video output.

The external video-in signal is coupled to the input of optocoupler IC41 after being amplified by driver Q41. Note the floating (isolated) grounds for the protection of the user. The optocoupler output is buffered and amplified by transistors Q44, Q42, and Q43, then routed to the external input. The output signal exits at pin 14. Switching is controlled by the syscon (Pin 48). The CVBS signal is then routed to pin 16 for final video, sync, and chroma processing. This will be the topic of a future article. The signal is also sent to video buffer Q382. This amp couples the signal to the Closed Caption section for data removal.

Troubleshooting

A lot of processing takes place in the signal processor circuits of this set. Problems in these circuits can result in any of a number of common symptoms. The following paragraphs describe some of these common symptoms and suggests some procedures to isolate and correct the cause of these problems.

No sound, no video

A symptom of no sound or video almost certainly indicates a problem in the tuner or IF section. Tuner signal substitution was outlined in the tuner installment. The tuner subber's IF signal, or any IF signal from a suitable source, can be injected at the input of SAW filter Y200 or at the IF input of IC270, Pin 45. If audio and video are restored and the SAW filter passes the signal, then the problem must be in the tuner or the AGC or AFT circuits. Note: AFT problems will generally not cause a complete loss of signal.

If all external components associated with AGC adjust (Pin 47) and RF AGC (Pin 49) are okay, yet the AGC voltage cannot be adjusted through its normal range, then it is very likely that IC270 is bad. Before you replace the IC, however, desolder tuner Pin 5 and operate the set to be sure that an internal short in the tuner is not loading the AGC voltage.

Most of the sound section was covered in a previous installment. If the signal path after Pin 50 is found to be okay, then try injecting a signal at Pin 4, working your way back to Pin 7. In this case, you must use a 4.5MHz sound IF signal. If you conclude that the problem is in any part of IC270 that is associated with the sound section, then replacement of the IC will be necessary.

Inductor L210, connected to pins 2 and 3, is the VCO adjustment for the video demodulator. Slight misadjustment will cause herringbone patterns. If the misadjustment is greater, the circuit will become unlocked and the color will cycle between oversaturated and undersaturated. Serious misadjustment or an open L210 will cause a complete loss of video and sound. Loss of sound results because the sound IF signal is derived from the video demodulator.

No or poor video, good sound

In a situation where there is no video or poor video, but the sound is okay, it is likely that the problem is after Pin 8. To verify, scope Pin 8 and work your way through the video buffer Q381 to Pin 10. This is the internal video input to the internal/external switch. The selected signal exits at Pin 14. The external input signal path can be scoped in the same way. In this case, be sure to select the AUX input mode and inject a suitable video signal at the video IN jack.

Alternatively, you may inject a video signal at Pin 14 while observing the picture on the CRT. In this case, work your way backwards to Pin 8. Always adjust the signal amplitude to match what is shown on the schematic at any given point. If all circuits up to Pin 14 are normal, then any video problem must be in the chroma processing section which will be the topic of a future article. ■

Electronic servicing chemicals

by the ES&T Staff

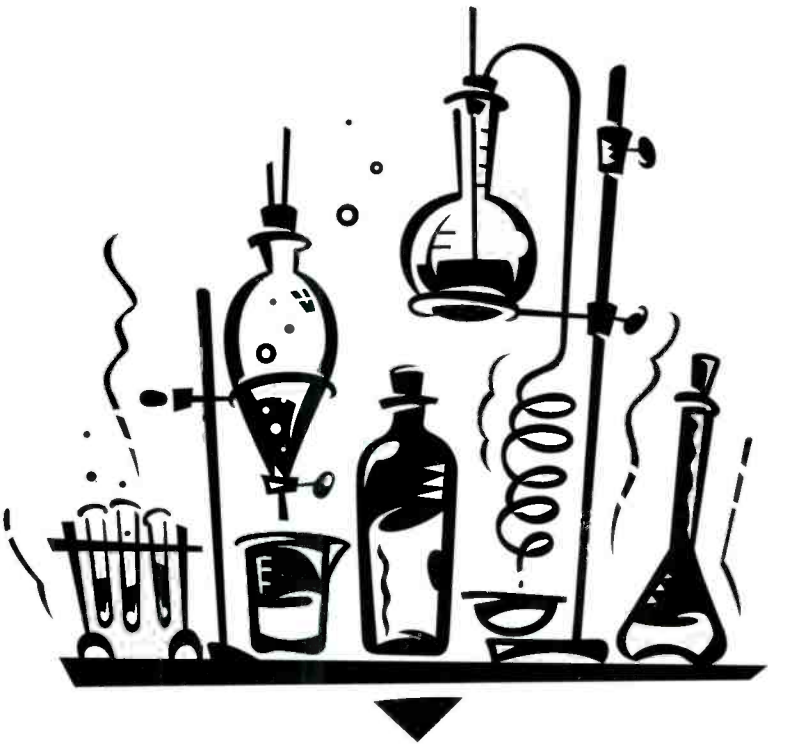

Although we hardly ever think about it, most of us use chemicals every day to solve some kind of problem. Just for a moment, think of all the things we use them for. We use chemical cleaners for the floor, dishes, the windows, mirrors, the car. For the car, there are a number of other chemicals that we may apply, or have someone else apply: lubes, windshield washer fluid, agents to remove water from gasoline, graphited door lock lube, windshield deicers, adhesives. We even use chemical agents for our bodies: soaps, hair sprays, skin lotions, depilatories, deodorants. It's really remarkable when you start to think about how many big and little containers we have that contain some kind of chemical that we use to clean, lubricate, condition, remove . . . whatever.

Chemicals in business

Actually, chemicals are ubiquitous in business: in manufacturing, servicing, and just about any business in which some kind of product or process in involved. In manufacturing, for example, chemicals are used as raw materials, as lubricants, as cleaners, in just about every way imaginable. As one instance, in the manufacture of integrated circuits, gases are used as dopants for the intrinsic silicon.

One type of gas is introduced to the exposed silicon and diffused into it using heat. The result is a material with a greater number of electrons than the intrinsic silicon. Another type of gas is introduced to other exposed areas of the silicon and diffused into it. The result is a material with fewer electrons than the intrinsic silicon. It is these areas of silicon that make up N material and P material.

Chemicals in servicing

Chemicals are important in consumer electronics servicing, as well. In many areas in consumer electronics products an application of cleaner, a drop of oil, or a rub with a little rubber restorer, can restore a useless unit back to service. As most readers know, a number of companies specialize just in this type of chemical product. Many of these products are available in a number of forms, depending on the particular application. For example, some cleaners may be available in bulk form to be used by the technician with applicators he provides, or in aerosol spray form, or even in presaturated swabs and/or wipes.

The form of any of these products that would be most useful to a particular service center would depend on how that company goes about product service. For example, in a large service center that performs a great deal of service on products such as VCRs, camcorders, CD players, and other electromechanical products, it might make sense to have one or two technicians armed with bulk chemical products who do nothing but clean and lubricate the mechanisms in these products. In a smaller service center that does far fewer of these units, it might make sense to have on hand presaturated wipes or swabs that can be opened and used quickly and then discarded.

Uses of the chemicals

Following is a partial list of the chemicals offered by most of the major suppliers of chemicals to consumer electronics service centers:

- Cleaners/degreasers
- Dusters
- Coolant spray
- Flux removers
- Static control products
- Solder
- Relay contact deoxidizer/restorer
- Swabs and wipes
- Lubricants
- Adhesives
- Rubber/platen restorers
- Flexible keypad contact restorers
- Non-contaminating hand lotions

Precautions

Most of those chemicals used frequently in the service center look pretty innocuous in their brightly colored cans, and used properly, pose no threat to the materials they're used on, the people using the product, or the environment. But a service technician should never lose sight of the fact that some of those chemicals can be quite hazardous if used improperly.

Some of the chemicals are quite flammable, and could lead to burns, or even start a fire if used improperly, such as in the presence of an open flame or hot

object. Some of the chemicals, even if they're pretty much inert, can displace air if released in large enough quantities, leading to unconsciousness or even death.

Materials compatibility

Not too many years ago, one of the most useful chemicals in the consumer electronics servicing inventory was freon. Freon had the most useful characteristics for a chemical for use in servicing. Of utmost importance, it was completely inert: spray it on any kind of plastic, metal, whatever, and it had absolutely no harmful effect on them. But it would dissolve many kinds of contaminants: grease, oil, for example, and so it was a kind of universal cleaner.

Moreover, freon, as testified to by its use as a refrigerant, evaporated rapidly on contact, cooling the object to which it was applied. That gave it another useful characteristic: it was able to cool components, thus allowing the technician to isolate those that might have ceased operating at high temperature, but that would operate at lower temperatures.

And finally, freon was electrically inert and non-conductive, as well as chemically inert. So, it could be used around energized equipment. One advertisement showed this dramatically by showing a picture of a TV set playing while bathed in freon. In addition to all of this, the stuff left no residue.

A perfect substance for so many uses. Except. . . except it is extremely stable, chemically, and persists in the atmosphere, and freon gas is lighter than air. So over a period of years, it rises through the atmosphere, where it acts on the ozone layer, causing it to become depleted. And, since the ozone layer is an important shield against ultraviolet rays, that made freon unacceptable as a chemical for general use, and it was banned.

Replacements for freon

Chemical manufacturers being the clever bunch that they are, have come up with a number of substitutes for freon. None of them is the all-around chemical player that freon was, and so what used to take one can of chemical spray, now takes a number of chemicals. Moreover, where the consumer electronics servicing technician once could blast away with freon under almost any circumstances, now he had better be more discerning.

For example, a chemical may be a great cleaner and degreaser, but it just might attack certain plastics. So, if a technician doesn't read the label and make sure that the spray is safe for the material he's going to use it on, it just might melt it. Or, make it tacky. And, of course, that poses another problem for the technician. He has to identify the material he's going to use the chemical on.

In other words, today's servicing chemical arsenal is generally safe and effective, but it requires a degree of awareness and precaution that wasn't required in the not so distant past.

Manufacturers' data sheets

The way to avoid causing injury or illness to the technician, damage to products, or problems to the environment is to take the time to read the information provided by the manufacturer on any of these chemical products. This information is available in two forms: the technical data sheet (TDS) and the material safety data sheet (MSDS). The technical data sheet provides general information about the product, including compatibility with other materials, usage instructions, availability, and environmental impact data. The material safety data sheet provides details on human safety, including health effects, other safety data, including flammability, and handling and storage.

When you buy one of these products, if they don't come with one or both of these data sheets, ask for them and read them carefully. If you are thinking about using one of these products, but you're not sure if it will do exactly what it can do, you can request this data from the manufacturer in advance. Some manufacturers provide a fax-back service, such that you can call and, using the touch-tone keypad of the telephone request information on certain products. The requested documentation will be directed to a fax number that you specify.

The internet has also become a source of a great deal of information on manufacturers' products. As an example, during the research for this article, we found one chemical manufacturer's internet site on which it was possible to download individual MSDSs, or even, if preferred, to download a .zip file containing all of that manufacturer's MSDSs.

Chemicals provide the service technician with a lot of options for service. Used with care, they can restore a dead product to life. The key to using chemicals successfully, as with any other of the products used in product service, is to understand their benefits, their limitations, and their hazards and apply them accordingly. ■

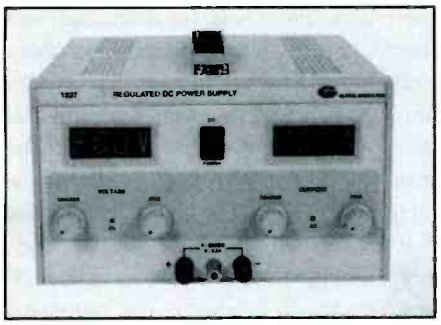

Single output dc power supply

Global Specialties introduces the Model 1337 with continuously variable voltage (0-60VDC) and current (0-2.5 Amps) output, as well as constant voltage and constant current modes to suit a wide range of applications. The Model 1337 offers digital reading accuracy of 0.5% and 2.5Amp output.

70 Fulton Terrace, New Haven CT 06512, Phone:1-800-572-1028, Fax: 203-486-0060, Website: www.globalspecialties.com

Circle (90) on Reply Card

PC scan NTSC pattern generator

Designed for both bench and field use, Leader's new PC scan pattern generator, Model LT 1607, meets the test-signal needs of most computer monitors and handles NTSC and Y/C monitors as well.

A little larger than a paperback book, the unit uses simple, straight-forward controls to call up raster formats for VGA, SVGA, XGA, SXGA, MAC13, MAC16, and MAC19 computer monitors. In addition, the unit outputs composite NTSC and Y/C feeds to make it the ideal source for adjustments of very large screen displays, video walls, etc. Test signals include color bars, circle/crosshatch, window, computer characters, and a raster that can be set to white, yellow, cyan, green magenta, red, blue, and black. Auto pattern sequencing may be selected and individual RGB level controls are provided.

380 Oser Avenue, Hauppauge, NY 11788, Phone: 516-231-6900, Fax: 516-231-5295, Website: http://www.leaderusa.com, E-mail: sales@leader.com

Circle (91) on Reply Card

HFE cleaner

Tech Spray introduces its new HFE (hydrofluoroether) reformulations that offer powerful cleaning performance combined with environmental safety and non-flammability. These reformulated products include HFE cleaner/degreaser, HFE flux remover, and HFE contact cleaner. They contain no 1,1,1-trichloroethane, CFCs, HCFCs, or other ozone depleting solvents, and are safe for use on most plastics.

P.O. Box 949, Amarillo, TX 79105-0949, Phone, 806-372-8523, Fax: 806-372-8750. Website: http://www.techspray.com.

Circle (92) on Reply Card

Satellite signal level meter

Leader's new Model LF 942A goes to the dish/LNB location to facilitate precise aiming and evaluation of the chosen site. It supplies power to the LNB during checks and is independent of the receiver, so that a judgement of signal level can be made before cable runs and distribution systems are set up.

The meter is a compact, portable battery-powered instrument which displays signal levels in dBmV or dBμV, as well as in bar graph form.

Factory programmed for worldwide channel listings, the unit includes direct and user programs with 10-channel memory, with level indicators to aid in the use of multiple outlet systems and in checking the LNB to tuner link.

Important features include: 1V step, +11 to +18 LNB voltage settings to meet antenna polarity requirements, auto power shutoff, ease of use and programming, and long 14 hour battery life.

380 Oser Avenue, Hauppauge, NY 11788, Phone: 516-231-6900, Fax: 516-231-5295, Website: http://www.leaderusa.com, E-mail: sales@leader.com

Circle (93) on Reply Card

Computer monitor pattern generator

B&K Precision announces the Model 1280A computer monitor pattern generator. Designed to test both PC and MAC monitors, the pattern generator is useful for service technicians in bench-top test or multiple monitor burn-in applications.

The unit was designed to provide a thorough evaultion of the operating condition and alignment of a computer monitor and allows internal or external adjustment for optimum performance. The unit enables the user to conduct operational and evaultion tests using crosshatch or dot pattern, color bars, window and raster patterns, in red, green, blue, black, and white.

The crosshtach or dot patterns may be used to evaulate the static and dynamic convergence, linearity, and pin cushion settings. The color bars are used to test the monitor's ability to produce proper colors. Setting the auto/manual switch to AUTO allows the output to automatically cycle through all patterns.

1031 Segovia Circle, Placentia, CA 92870, Phone: 714-237-8220, Fax: 714-237-9214, Website: www.bkprecision.com

Circle (94) on Reply Card

Electronic servicing information

by the ES&T Staff

As we have reported on several occasions in this magazine, the trend in consumer electronics service information seems to be away from paper and toward some form of computer-based files, or as many call it, electronic service information, or ESI. Notably, Thomson Consumer Electronics has switched over completely to ESI, and announced that they will no longer offer paper versions of their service literature. Philips has their service literature, "The Force," in personal computer file format. Sony has at least some of their service literature available on disk. Still other consumer electronics manufacturers have some or all of their service literature on some kind of computer disk.

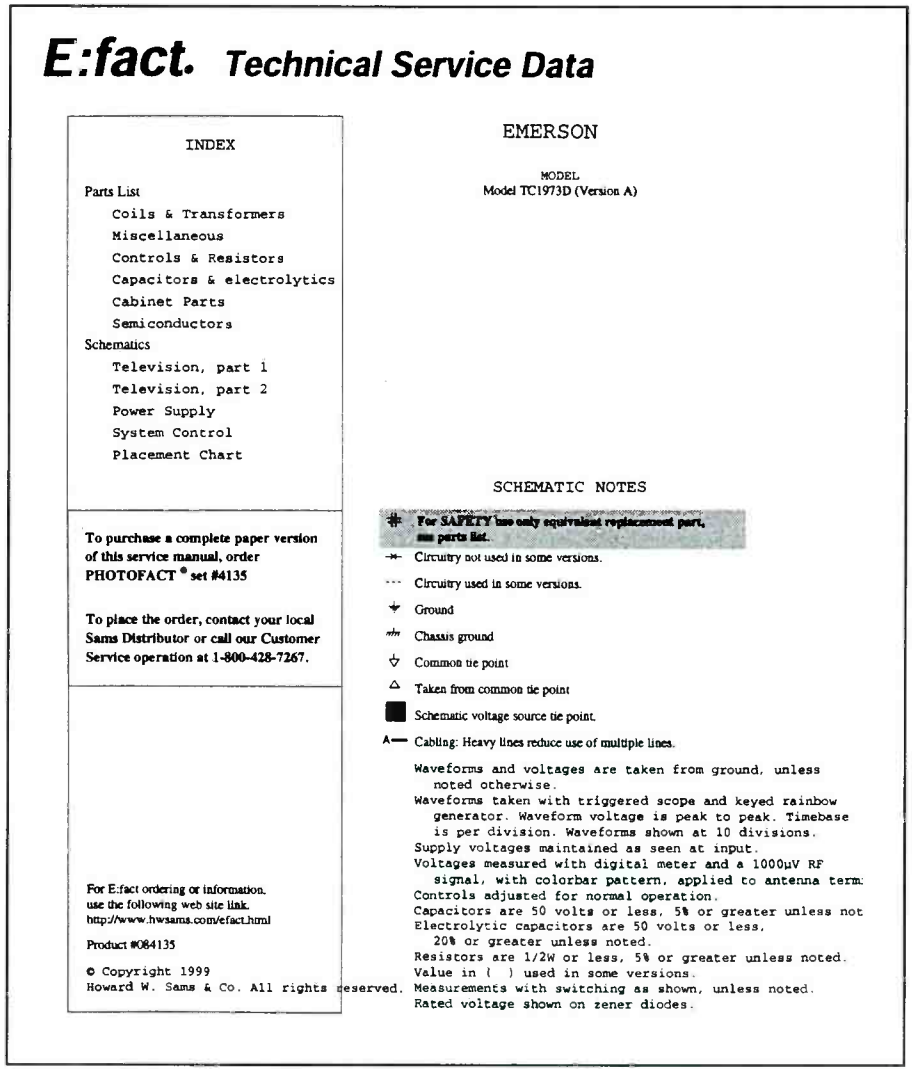

E:fact. Technical Service Data

INDEX

Parts List
- Coils & Transformers
- Miscellaneous
- Controls & Resistors
- Capacitors & electrolytics
- Cabinet Parts
- Semiconductors

Schematics
- Television, part 1
- Television, part 2
- Power Supply
- System Control
- Placement Chart

To purchase a complete paper version of this service manual, order PHOTOFACT® set #4135

To place the order, contact your local Sams Distributor or call our Customer Service operation at 1-800-428-7267.

For E:fact ordering or information, use the following web site link. http://www.hwsams.com/efact.html

Product #084135

© Copyright 1999 Howard W. Sams & Co. All rights reserved.

EMERSON

MODEL
Model TC1973D (Version A)

SCHEMATIC NOTES

For SAFETY use only equivalent replacement part, see parts list.
Circuitry not used in some versions.
Circuitry used in some versions.
Ground
Chassis ground
Common tie point
Taken from common tie point
Schematic voltage source tie point.
Cabling: Heavy lines reduce use of multiple lines.

Waveforms and voltages are taken from ground, unless noted otherwise.
Waveforms taken with triggered scope and keyed rainbow generator. Waveform voltage is peak to peak. Timebase is per division. Waveforms shown at 10 divisions.
Supply voltages maintained as seen at input.
Voltages measured with digital meter and a 1000µV RF signal, with colorbar pattern, applied to antenna term:
Controls adjusted for normal operation.
Capacitors are 50 volts or less, 5% or greater unless not
Electrolytic capacitors are 50 volts or less, 20% or greater unless noted.
Resistors are 1/2W or less, 5% or greater unless noted.
Value in ( ) used in some versions.
Measurements with switching as shown, unless noted.
Rated voltage shown on zener diodes.

Some advantages of ESI

Some of this ESI is very useful. Looking up service information on the computer takes a little getting used to, and some of the products, as we understand it, aren't exactly user-friendly. But once a technician gets used to using the ESI, some of it works very well. And ESI does have some advantages.

The most obvious advantage is that several pounds of manual that took up many cubic feet of space has been compressed into a very small space. What used to take up several file cabinets can now be stored in the space of one file drawer. Another advantage is that the service center doesn't have to print out the entire manual and all the schematic diagrams.

If the service center subscribes to some manufacturer's service literature, the technicians can simply file the disk(s) until one of the sets covered by an ESI disk is encountered. Then it's possible to look up a lot of the information on the computer monitor. If the technician needs a hard copy of some of the text, a schematic, or partial schematic, he can print only those portions he needs and doesn't have to print anything he doesn't need.

Moreover, if three technicians in the same service center were working on three of the same model sets at the same time (an unlikely scenario, I admit), each could print out the part, or parts of the manual he or she needs. Or, each could print out their own copies of the exact same portions of the manual. When the set is repaired, the tech could just toss the marked up copy of the schematic, or file that paperwork in a file related to that chassis so that it could be accessed by anyone servicing one of those sets in the future.

A different system for each manufacturer

A major drawback to ESI is that the approach to digitizing the service literature is different for each manufacturer. Each manufacturer has its own software for making the ESI accessible, which means that the service center has to have all of those different programs on the computer hard drive, and has to relearn the system each time he changes to a different manufacturer's ESI.

A universal approach to service literature

Howard W. Sams & Company has developed a method of digitizing their PhotoFact service information, making it possible for a service center to store, display, and print service literature for a large

number of television sets manufactured by a large number of manufacturers, using a single document viewer. The product is called E:fact.

One of the advantages of this product is that the viewer for these documents is free, and can be downloaded from the internet. It's called "Adobe Acrobat." The full-fledged version of this software, for those who wish to create this type of file, costs several hundred dollars, but the reader, for those of us who only wish to read and print these files, it is free.

Moreover, files encoded using Acrobat are in what is called "portable document format," which means that any computer that has the appropriate version of Acrobat can view any files encoded in Acrobat, no matter what computer the document was originally encoded on. Because files encoded are in a *portable document format*, all such files have the DOS/Windows extension .pdf.

Another advantage of this product is that it can be obtained almost instantly. All a technician has to do is call the company and request a particular E:fact. If one is available on that set, the company will take the caller's credit card information, and in a short time, e-mail the document to him.

Nothing's perfect

There are a few drawbacks to this service data. For one thing, just as with the company's paper service literature, not all sets are covered. It doesn't make economic sense for a third party, such as this, to produce literature for sets that aren't bought in quantities of many thousands, so that corresponding quantities of the documents can be expected to be sold. Another drawback is that the availability of this service literature ordinarily lags the availability of manufacturer's service literature by some period of time. It takes time to wait and see what sets will sell big, then to disassemble them, study them, and produce the literature.

Still another drawback is that the information available in the electronic version is somewhat abridged. It doesn't include the familiar photo layout with grid for easy component location and identification.

However, offsetting some of these disadvantages is the fact that the electronic version is slightly less expensive than the paper version. ■

ES&T Calendar

National Professional Service Convention
August 2–7, 1999
(Trade Show August 4 and 5)
Hotel Intercontinental
Dallas, TX

NESDA
2708 W. Berry
Fort Worth, TX 76109-2356
817-921-9061 • Fax: 817-921-3741
Website: http://www.nesda.com

PCS '99
September 22–24, 1999
New Orleans, LA
703-739-0300

Consumer Electronics Manufacturers Association (CEMA)
2500 Wilson Blvd.
Arlington, VA 22201-3834
703-907-7600
Website: http://www.cemacity.org

An RCA/GE update: A repair history for the newer chassis

by Bob Rose

As you know, Thomson has a way of changing chassis every few years to keep abreast of the benefits provided by innovations in technology, a practice followed by every manufacturer of consumer electronics. The CTC175/176/177 family has given way to the CTC185, the CTC169 has been replaced by the CTC195 for projection TVs, and the CTC197 for direct view models. After the new chassis have been in service for a number of months, the problems they develop usually assume a kind of pattern, and a repair history begins to evolve. I want to acquaint you with the unfolding repair history of the newer Thomson chassis and to point out certain problems in the "oldies but goodies."

The CTC185 chassis

The CTC185 chassis is remarkably similar to the family of televisions it was designed to replace. For example, it is contained on a single circuit board and designed around a serial-bus-controlled 64-pin color television (CTV) integrated circuit, working in conjunction with a microprocessor. It also sports tuner-on-board technology and chassis alignments via a service menu, which are stored in the now familiar EEPROM.

But there are significant differences. The circuit board is quite a bit smaller, most of the integrated circuits have been redesigned, the power supply is different, the service menu has been redesigned, and the customer menu has been changed. There are other differences, but these are the most noticeable. The jury is still out with respect to its reliability, but as with any product, the chassis has a tendency to develop certain problems.

Tuner wrap problems

We techs are quite familiar with the tuner-tuner wrap problems that the predecessor to the CTC185 had. As far as I can determine, via research and personal experience, the CTC185 does not follow suit. There will, of course, be the occasional problem caused by lack of solder around the tuner wrap, but it does appear that Thomson's engineers have solved that problem once and for all. You need, however, to be aware that the new tuner wrap is made of zinc. Since zinc melts at around 770 degrees, make sure your soldering iron is below this temperature before you attempt to repair a tuner wrap. If you don't, you run the risk of melting the wrap and adding to the problem that you are trying to solve.

The new wrap appears to be mechanically less stable than the older ones, which means that the RF connector can quite easily be pulled out of its mount. You can purchase an exact replacement for it by ordering part number 215543. The new part is far superior to one that you might salvage, let's say, from a defective RF converter and adapt to fit the tuner wrap. You can obtain these devices from parts distributors generally for less than $2.00. Incidentally, these RF connectors are useful for repairing a lot of other tuners, not to mention VCR RF converters!

Safety leakage test a must

Should I also mention that you *must* perform a safety leakage test on the television after you have completed any repair? I looked at a CTC185 this week that someone had repaired by installing an RF connector. The customer took his TV home and used it with an outside antenna for several weeks without a problem. He decided he wanted the benefits of cable and called the local cable TV company to provide him with service. Everything worked like clockwork until the cable technician tried to connect the cable lead to the television, at which point he generated a large spark and smelled something burning inside the television. I examined the set a few days later, and, let me tell you, the circuit board was so badly damaged it could not be repaired.

You can figure out what happened. The isolation barrier between this "hot chassis" and the "outside world" had been compromised, permitting an ac voltage of about 120V to be present between the RF connector and earth ground. Loss of the television set was an expense and an inconvenience, but a greater loss would have occurred if the customer had come in contact with earth ground while attaching the leads of the outside antenna. Performing a safety leakage test before returning the television set to the customer could have prevented this unfortunate chain of events that began with a glob of solder in the wrong place.

Hot Q4114 or shorting CR4117

Figure 1 gives you an idea of what the power supply in this set looks like. Figure 2 is a blow-up of the circuit around Q4114 showing the position of CR4117. Since I have already written an article for this magazine describing how the power supply works, I will confine my remarks to problems associated with Q4114 and CR4117. These chassis are, it seems, in a constant state of evolution. Early productions of the CTC185, for example, use one part for the switching MOSFET, while later production runs use another. CR4117 has been added to the later models and is not found in the earlier versions. If you have serviced some of these TVs, you will be familiar with a kit (part number 231523) you installed when Q4114 failed. The parts in the kit will work in later versions, but the MOSFET will not. Before you replace a failed Q4114 in any of these sets, you really should check the literature to see which MOSFET your particular set uses. There are two as of this writing, and the one will not substitute for the other.

Let's get back to the point. If Q4114 runs hot or if CR4117 shorts, first check to

Rose is an independent consumer electronics business owner and technician.

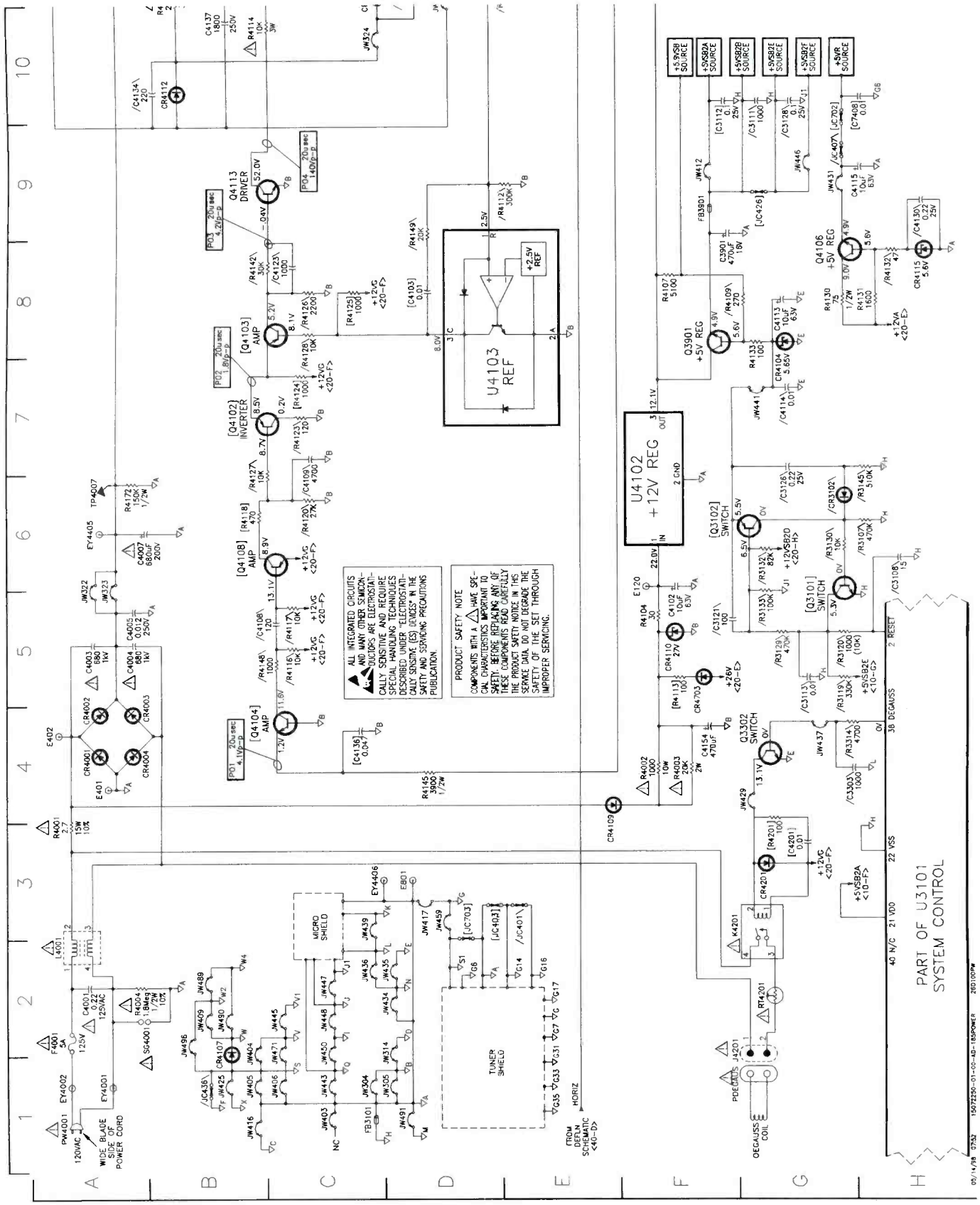

Figure 1. The CTC185 power supply schematic diagram.

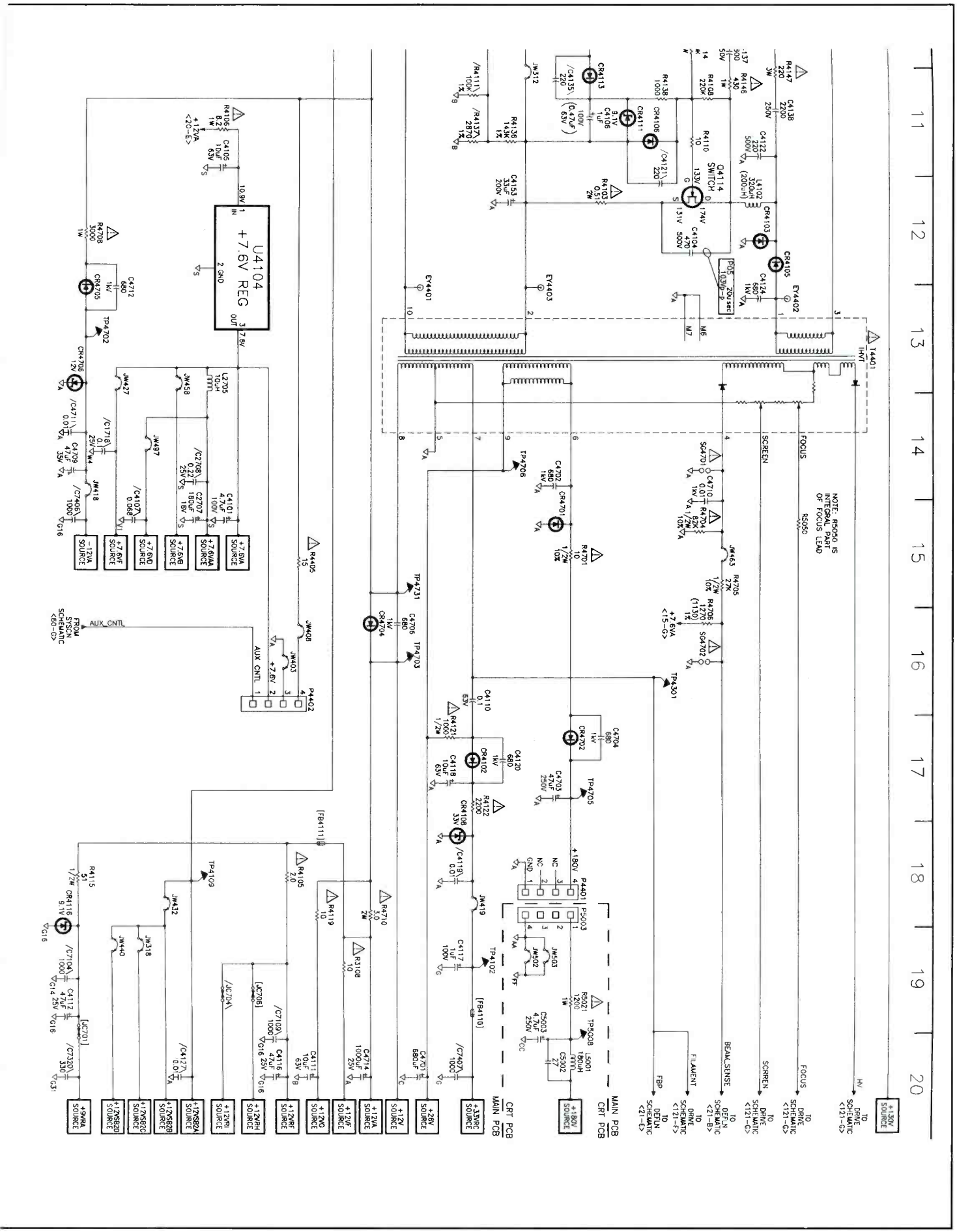

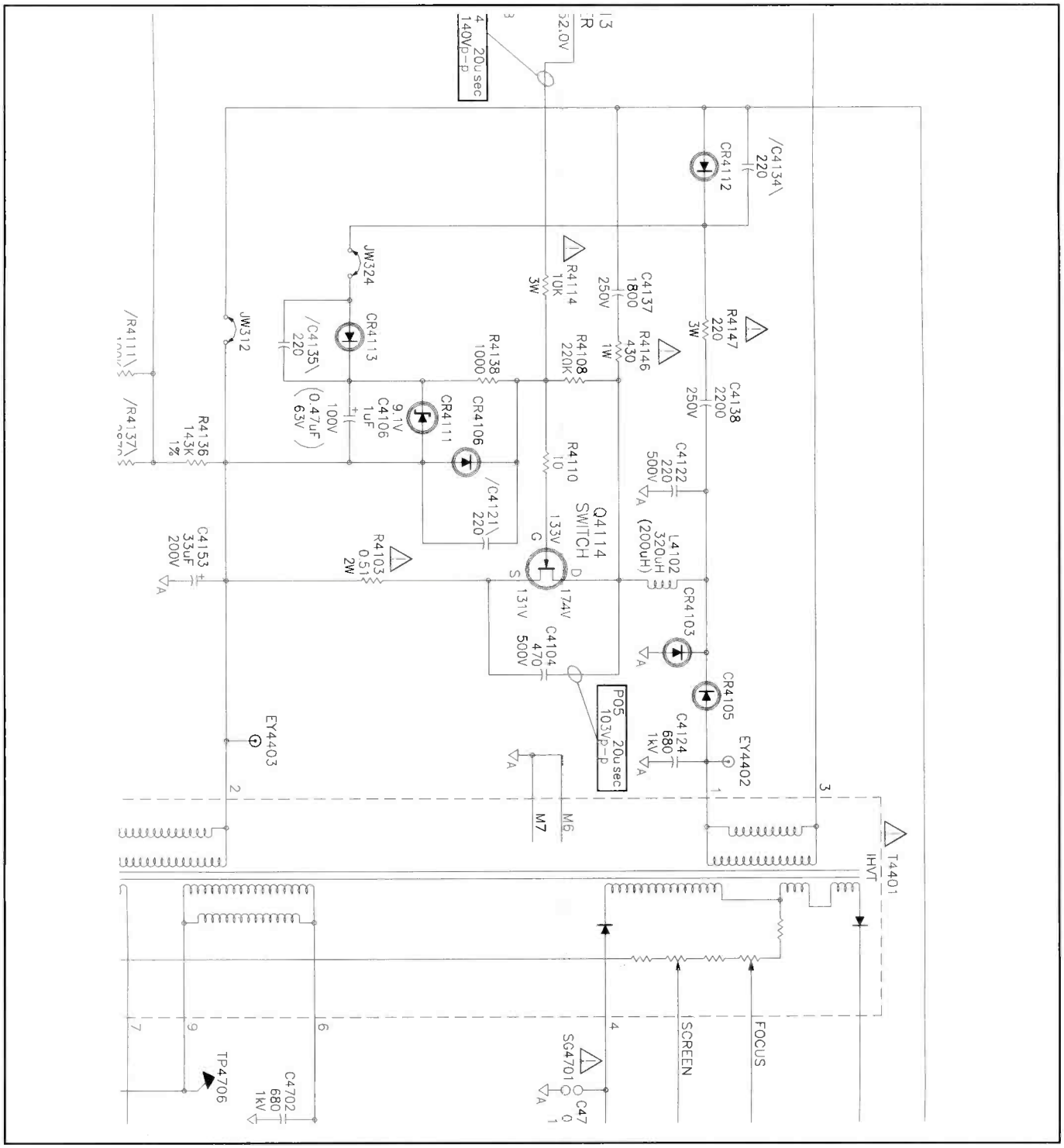

Figure 2. A detail of the circuit around Q4114 in a CTC185, showing the position of CR4117. In this set, Q4114 has a history of running hot, and in some chassis, you may find CR4117 to be shorted.

make sure that the transistor is fully and correctly seated against the heat sink. Then, observe the waveform at the drain of Q4114. The correct waveform has a slight rising edge at its beginning. The waveform that causes the transistor and/or diode to fail will have a large rising spike at its leading edge and will read about 290Vpp. RCA says the components known to cause the problem at present are C4136, C4103, and R4126, but admits that other components could also be the culprit. The following is a quote from a recent service bulletin: "The best advice is to observe the waveform as it enters Q4104 and proceeds to the gate of Q4114. The stage where distortion occurs should be investigated. Remember slight variations in bias voltages cause drastic changes in this regulator." (taken from Electronic Service Information, February 1999).

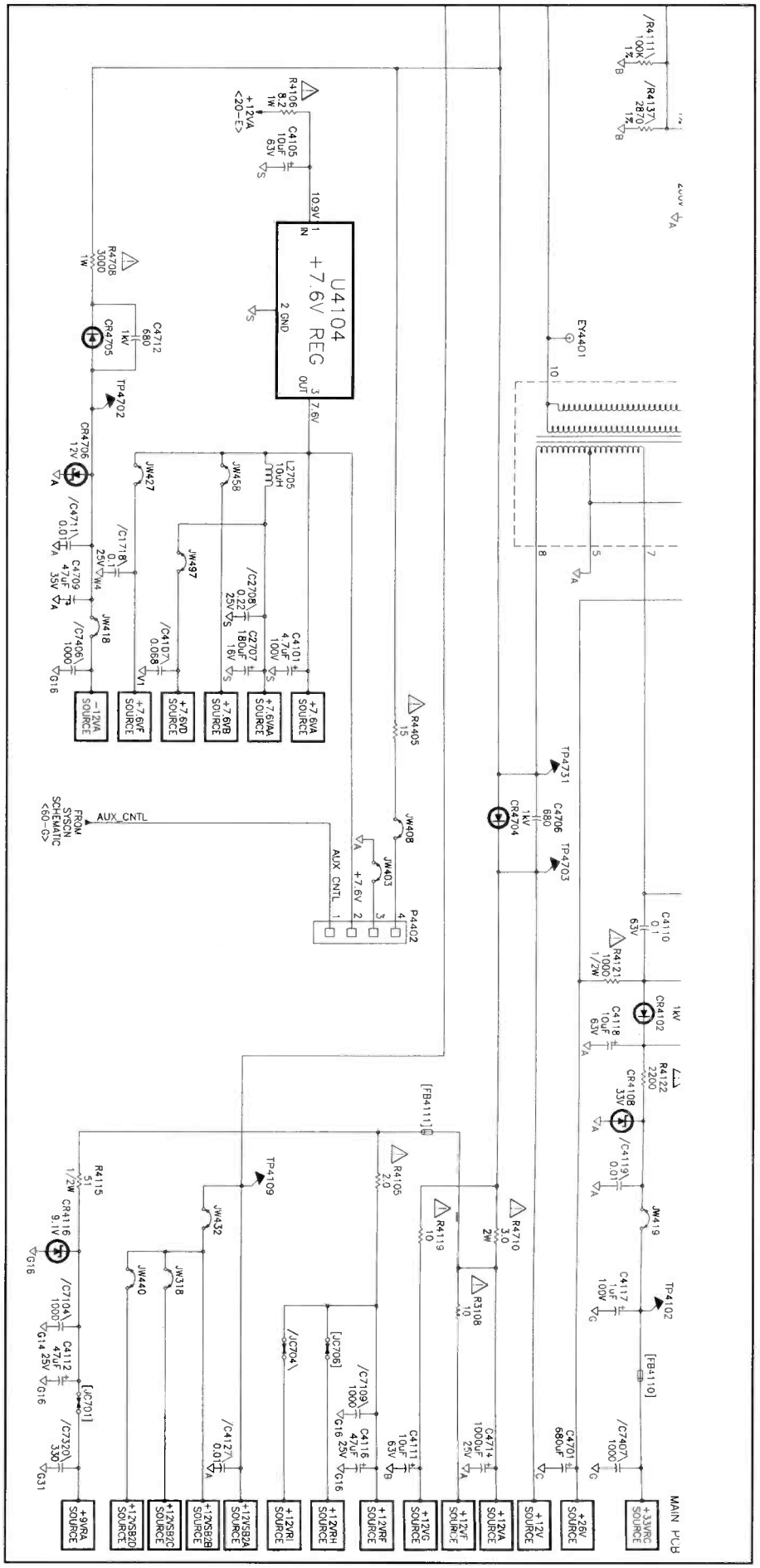

Figure 3. In this chassis, CR4704 is responsible for developing the 12V scan-derived voltage. If this zener diode fails, the TV will exhibit a "dead set" symptom, but with a twist. The symptom will be an attempt to start three times, but without engagement of the degaussing relay. See the text for the recommended troubleshooting procedure.

Failure of CR4704

If you look at Figure 3, you will see that CR4704 is responsible for developing the 12V scan-derived voltage. If it fails, the TV will exhibit a "dead set" symptom, but with a twist. The symptom will be an attempt to start three times, but without engagement of the degaussing relay. If you encounter a set that has these symptoms, the literature suggests you use the following troubleshooting procedure:

(1) Monitor the cathode of CR4102 (Figure 3) while you issue an on command. You should find about 30Vdc present. If the voltage comes up and decays, you can assume the system control, the horizontal deflection, and the high voltage circuits are working. The TV is therefore either going into XRP (X-ray protection) shutdown or U3101 is turning off horizontal drive due to lack of run sense voltage.

(2) Next, monitor the voltage at the cathode of CR4704 while pressing the power on control. If the voltage comes up to 12Vdc and decays, check XRP at pin 24 of U1001 (not shown), run sense at pin 13 of U3101, the high voltage, and regulation circuits. Based on my experience, the likely culprit will be the regulator circuit, which you can easily check by decreasing the applied ac to the TV via your variable transformer.

(3) If the dc voltage does not come up to 12V, CR4704 is more than likely opening under load and should be replaced using part number 207878. If you don't have the new part, try applying 12V at the cathode of CR4704 using an external power supply. If the TV starts and runs, you have found your problem.

A dead set that doesn't try to start

My next comment concerns a CTC185 that is dead and doesn't even try to start. After you confirm correct operation of the standby power supply — 5V to the microprocessor, etc. — check the reset voltage at pin 2 of U3101 (Figure 4). If you measure 0Vdc, check the base of Q3101. If you measure 0.6V, check the voltage on the cathode and anode of CR3102. If the

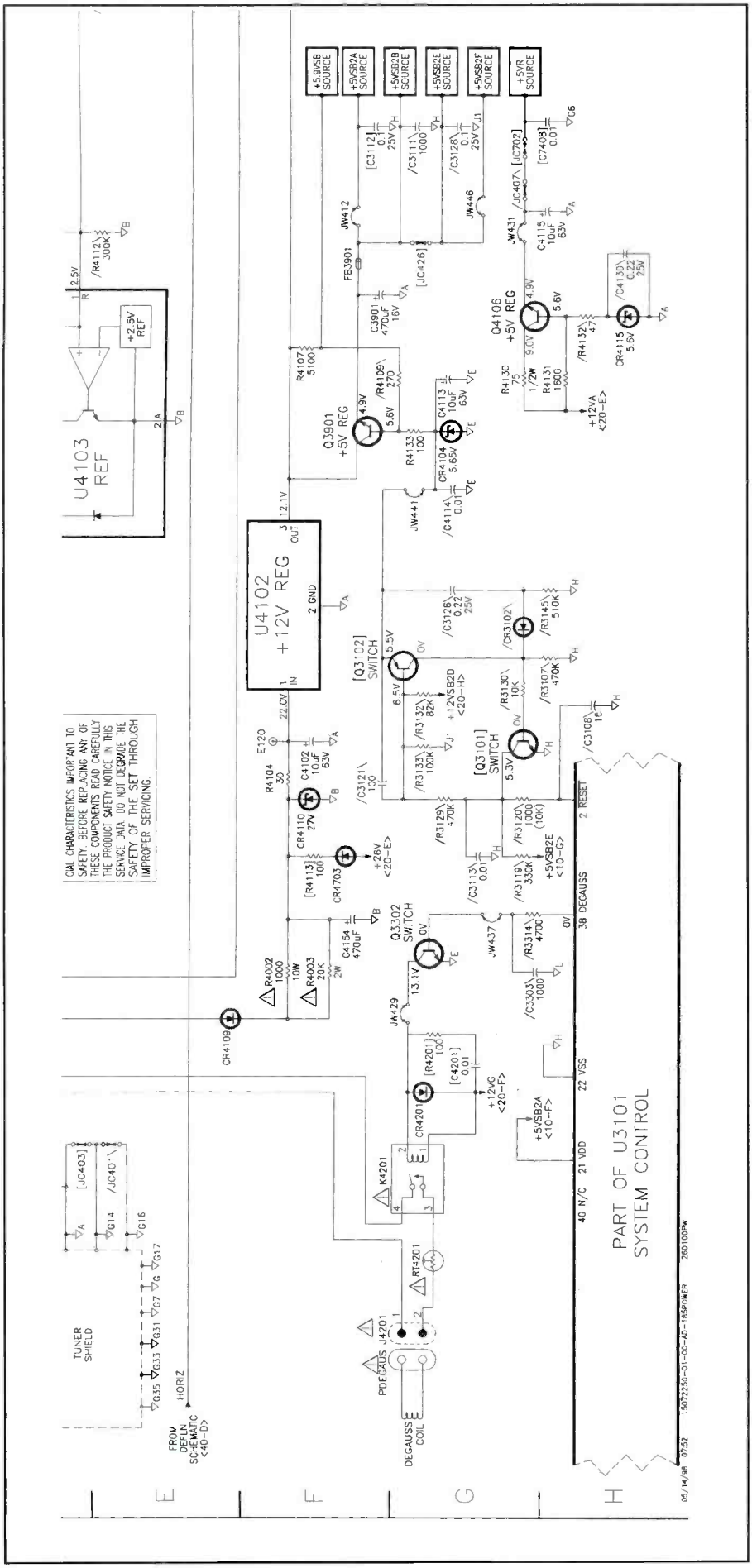

Figure 4. If a CTC185 television chassis is dead and doesn't even try to start, after you confirm correct operation of the standby power supply; 5V to the microprocessor, etc., check the reset voltage at pin 2 of U3101, check the base of Q3101, and check the voltage on the cathode and anode of CR3102.

voltage on its anode is approximately 0.5V volt higher than the cathode, C3126 is leaky and will have to be replaced.

The CTC195 chassis

You might be interested in three notes I have on projection TVs (PTV) that are based on the CTC195 chassis. Two of these notes are related to convergence problems, and the third deals with the problem of flashing video.

No convergence

In the first instance, the TV exhibits a "no convergence" symptom with all convergence settings missing from the customer menu. The new microprocessors have what is called an "auto detect" feature. When the TV is turned on, the microprocessor looks for certain features, like the digicon IC on the convergence printed circuit board. If it does not detect the digicon IC, it assumes that the chassis is direct view and removes the convergence options from the menu.

If you experience this situation, check VCC to the digicon IC, U19501 (Figure 5). If the voltage is missing, check U19502, the five-volt regulator. If this voltage is missing, proceed to the convergence power supply. You should be aware that an overcurrent condition in the convergence amplifier circuit will cause the power supply to shut down.

Unplug the convergence yokes and check to see if the power supply runs. If it starts and runs, plug the yokes back in one at a time to see which one shuts the power supply down. If it does not run with the convergence yokes unplugged, the problem will be in the power supply, and you will have to troubleshoot it. If the power supply is not at fault, you will have to proceed to the digicon itself (U19501).

The literature suggests checking all inputs (including clock and data from the system microprocessor) to U19501 before you even consider replacing it, because you will have to do a complete convergence alignment if you replace it.

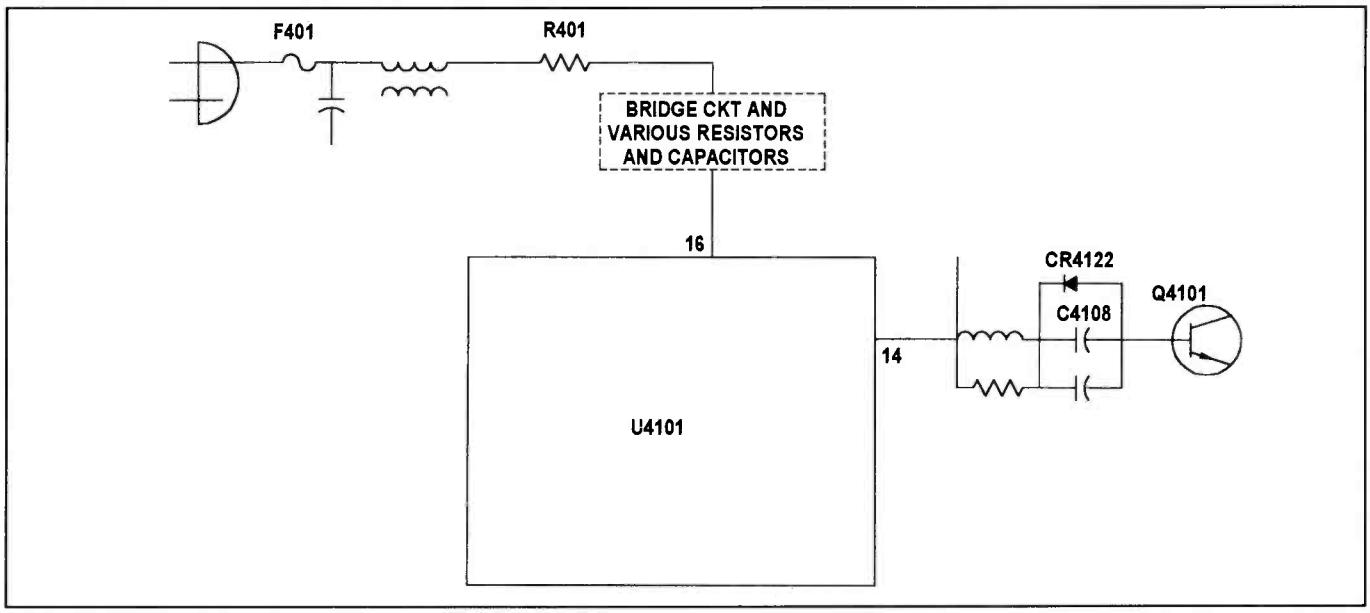

Figure 5. If you encounter a CTC195 chassis that exhibits a "no convergence" symptom, check VCC to the digicon IC, U19501. If the voltage is missing, check U19502, the five-volt regulator. If this voltage is missing, proceed to the convergence power supply.

Each tech has his/her own way of doing things. I personally do not replace those monster SMDs. The convergence panel is relatively inexpensive. I order a new one, switch EEPROMs, install the new panel, and fire up the TV. It works every time for me, and is just about as inexpensive as attempting to repair the panel, unless the damage is relatively minor.

A variation of the no convergence problem

There is a variation of the "no convergence" problem. In this instance, the symptoms range from minor convergence drifts to major convergence distortion. In extreme cases, the convergence amplifier circuits are driven into saturation and causes the set to shut down. These symptoms can also be intermittent.

If the convergence adjustment settings

are present in the customer menu, the microprocessor has detected the convergence panel. Therefore, suspect C19508 on the convergence panel. It is located off pin 6 of U19501 on the digicon board and has a history of changing value or opening altogether (Figure 5).

No video/flashing video

The third note concerns a CTC195 that comes into the service center with the complaint of no video or flashing video. Projection sets have a scan loss detect circuit, the purpose of which is to blank the picture tubes if there is a loss of horizontal or vertical deflection. It is possible for this circuit to cause the no video or flashing video symptom. To troubleshoot the problem, check for VCC to the scan loss integrated circuit. If VCC is present and correct, check for loss of vertical or horizontal deflection. A word of caution: do not defeat the scan loss circuit unless you are absolutely sure the deflection circuits are working. If you do and the deflection circuits are not working, you will more than likely damage the picture tube.

No video/flashing video in PTVs

Incidentally, the same problem can crop up in PTVs based on the CTC169, CTC178, and CTC188 chassis. In this case, begin by checking VCC to the scan loss IC. If it is missing, troubleshoot the PTV power supply. If it is pulsating, think in terms of an overcurrent problem. Start by unplugging the convergence yokes. If VCC returns to normal, troubleshoot the appropriate convergence amplifier circuit. It is also possible for the resupply to the regulator IC to cause the problem. The resupply diode does have a modest history of opening up under load.

The scan loss circuit can also cause two other problems, partial loss of video or a black band in the picture. If, and only if, the deflection circuits are operating properly, you can defeat the scan loss circuit by grounding the output of the scan loss transistor. If the problem clears up, look for resistors that have increased in value. You should also check the vertical parameters in the service menu that deal with vertical countdown.

Repeated failure of Q4101 in the CTC169 chassis

My final note concerns the failure and/or repeated failure of Q4101, the chopper transistor, in the CTC169 direct view or projection televisions. In some instances, the new transistor will work fine in the service center, but fails after it has played a few days in your customer's house. By the way, its failure almost always takes out U4101, the regulator IC, and may also take out F4001 and/or R4001.

I worked on one just the other day that illustrates the problem. The TV came in as a dead set. The fuse had blown because the transistor had shorted. I replaced the transistor and fuse and found out that U4101 was also defective. The fuse, transistor, and IC permitted the power supply to start, but I heard a slight buzzing noise coming from the area of the power supply. I turned the TV on and noticed the buzzing sound increased in volume. However, the picture and audio were about as good as they can be. Having been down that road before, I felt the chopper's heat sink and found it to be hot. I turned the set off, checked C4108 and found it defective. Replacing the capacitor, along with the other parts, put the TV into good working order.

The literature says that the tech should check the regulated B+ at the cathode of CR4116 while the TV is in standby mode. If it is high, typically 150V or higher and perhaps accompanied by a buzzing sound, replace C4108 using the same value as the original, which may be 39µF (part number 208002) or 47µF (part number 193043). CR4122 (part number 200158) may also cause the problem. I have never found it to be defective, but I have had to replace the capacitor many times. ■

PHOTOFACTS

GE
CTC185AB3 4158
25GT518TX1 4158
27GT616TX1 4158
27GT619SX1 4158
27GT619TX1 4158
27GT624TX1 4158

ORION
MXT1301AD 4157
TV1926 (Version A) 4166
TVM1307AD (Version A, B) 4157

PANASONIC
ALEDP313 4163
CT-36G33CW 4163
CT-36G33UW 4163
CT-36G33W 4163

PHILIPS MAGNAVOX
TP2781C101 4165
27D100-7570 4165

QUASAR
ANEDC307 4164
SP2731UW 4164
SP2731W 4164

RCA
CTC185A3 4162
CTC185AA3 4160
F19205GYTX1 4162
F19206BKTX1 4162
F19207BCTX1 4162
F25209BCTX1 4160
F25209WTTX1 4160
F25211BCTX1 4160

SANYO
DS25380 4161
25380-00 4161
25380-01 4161
25380-02 4161
25380-03 4161
25380-04 4161
25380-05 4161

SONY
KV-27S65 4167
KV-29SL65 4167
KV-29SL65C 4167
SCC-S01K-A 4167
SCC-S03G-A 4167
SCC-S04V-A 4167
SCC-S06F-A 4167

SYMPHONIC
ST131B 4159

TOSHIBA
CF36H40 4168
TAC9808 4168

ZENITH
A19A02D 4156
LGA20A02GM 4156

***The Engineering Handbook, CD-ROM,* edited by Richard C. Dorf, CRC Press, 26 page manual, $99.95**

The CD-ROM version of *The Engineering Handbook*, originally published in 1995, contains all the text and figures found in the 2,500-page print version, including:

- Definitions and explanations of nearly 2,000 terms
- Nearly 3,000 equations and formulas, as well as more than 1,700 figures
- Extensive cross-referencing and indexing system.

This user-friendly CD-ROM makes the information found in the book even easier to access.

Features:

- Boolean and proximity searching
- Extensive support for bookmarking, journaling, and annotation
- Cut-and-paste capability for inserting text and figures into other documents and programs
- Zoom features and inter-text links
- Practical guidance developed specifically for the needs of practicing professional engineers

System Requirements: 8MB RAM, 6MB available disk space, CD-ROM drive, IBM-compatible 486, Windows 3.1/95/or NT

CRC Press LLC, 200 Corporate Blvd., N.W., Boca Raton, FL 334431-9868

***Simplifying Digital Signal Processing* by Rajesh J. Shah, PROMPT Publications, 350 pages, paperback, $29.95**

Simplifying Digital Signal Processing breaks down the processes of digital communications into their simplest forms, building in a logical progression, from the basic mathematical theories to practical concepts, with charts, figures, and tables to ensure the subject is fully understood. Included in the discussions are: signals, system components, systems, transforms, analog-to-digital converters, filters, digital-to-analog converters, signal processing, and DSP applications.

For anyone interested in digital processing, or who wants to fully understand the subject from the ground up, this book will occupy a prominent position on their reference shelf.

Rajesh J. Shah is currently working for Delphi Energy and Engine Management Systems, on electric and hybrid vehicle programs. He has 15 years experience in the field of electronics, having worked for Lambda Electronics, Branson Ultrasonics, Magnetek, and Valmont Electric. He holds a master's degree in Electrical Engineering (MSEE) from Polytechnic University, Brooklyn, New York, as well as a master's degree in Business Administration (MBA) from Indiana Wesleyan University, Marion, Indiana.

PROMPT Publications, 2647 Waterfront Parkway E. Drive, Indianapolis, IN 46214-2041

***Practical Electronic Fault Finding & Troubleshooting,* by Robin Pain, Butterworth Heinemann, 240 pages, paperback, $34.95**

A real troubleshooter must be able to get a feel for what is going on in the circuit he is examining. This book uses simple circuit examples to illustrate principles and concepts fundamental to the process of troubleshooting. *Practical Electronic Fault Finding & Troubleshooting* consists of practical tips, hints, and rules of thumb, all of which will equip the reader to tackle any job, whether it is fixing a TV, improving sound, or locating a fault.

Butterworth Heinemann, 313 Washington Street, Newton, MA 02158

***Telephone Projects for the Experimenter*, by Carl J. Bergquist, PROMPT Publications, 272 pages, paperback, $29.95.**

Telephony is a remarkable technology that has grown to be an indispensable part of our culture. The telephone lines represent an "electronic interstate" system that allows communication in a variety of ways. Since deregulation of the industry, the market has been flooded with an assortment of devices, supplying hobbyists with a fresh arena for ideas. If you have an interest in telephones and associated gear, this book is for you.

Telephone Projects for the Experimenters will furnish you with the fundamentals and basic history of telephone technology and some hands-on projects for your enjoyment. Some of the projects and topics include: 16-channel DTMF controller, electronic bell, automatic tape controller switch, hands-free headset telephone, 300-baud modem, long-distance call restrictor, build your own telephone lab, testing telephone equipment, and designing your own special telephone devices.

Following a successful career as a photojournalist for AP, UPI, New York Times, Newsweek, and other publications, author Carl J. Bergquist turned his efforts toward his lifelong hobby of electronics. Besides articles in Popular Electronics, Electronics Now, and others, Carl has authored *Build Your Own Test Equipment, The Video Hacker's Handbook* and *IC Projects, Fun for the Electronics Hobbyist and Technician*, all from PROMPT Publications.

PROMPT Publications, 2647 Waterfront Parkway E. Drive, Indianapolis, IN 46214-2041

***Electronic Circuit Guidebook, Volume 5: Digital Circuits,* by Joseph J. Carr, PROMPT Publications, 336 pages, paperback, $29.95**

Electronic Circuit Guidebook, Volume 5: Digital Circuits is about the basics of digital electronics and the fundamental circuits that make up not only computers, but all digital products. It joins other titles in the Electronic Circuit Guidebook series in providing you with encapsulated practical information about specific areas of electronics technology.

Electronic Circuit Guidebook, Volume 5: Digital Circuits looks at: logic gates, practical and arithmetic circuits, data converters, counters, number systems, microcontrollers, digital codes, display and decoder devices, registers, unclocked flip-flops, clocked flip-flops, and counters.

Joseph J. Carr has published more than 85 books and 700 articles since 1968. He also conducts monthly columns in magazines such as Popular Electronics, Popular Communications, Nuts 'n Volts, and 73. Carr holds a master's degree from George Washington University and a bachelor of science from the University of the State of New York. He currently works in avionics, with experience in radar, electro-optics, sensors, open systems, computing, and other disciplines.

PROMPT Publications, 2647 Waterfront Parkway E. Drive, Indianapolis, IN 46214-2041

Intermittent TV shut down problems

by Homer L. Davidson

The failure of almost any component in the horizontal output or low voltage power supply can cause the set to shut down. Of course, when the chassis shuts down and comes back on, that's a different type of problem for the technician to solve. In many cases, an intermittent shut down is more difficult to diagnose and repair.

The set might shut down at once, or it might take a minute or two before shut down. A TV chassis might have a intermittent shut down accompanied by a tic-tic noise. Another chassis might pulse off and on, then shut down. Sometimes, the set might shut down if the power line voltage is too high or too low. Whatever the intermittent condition, extra service time is required to solve the problem.

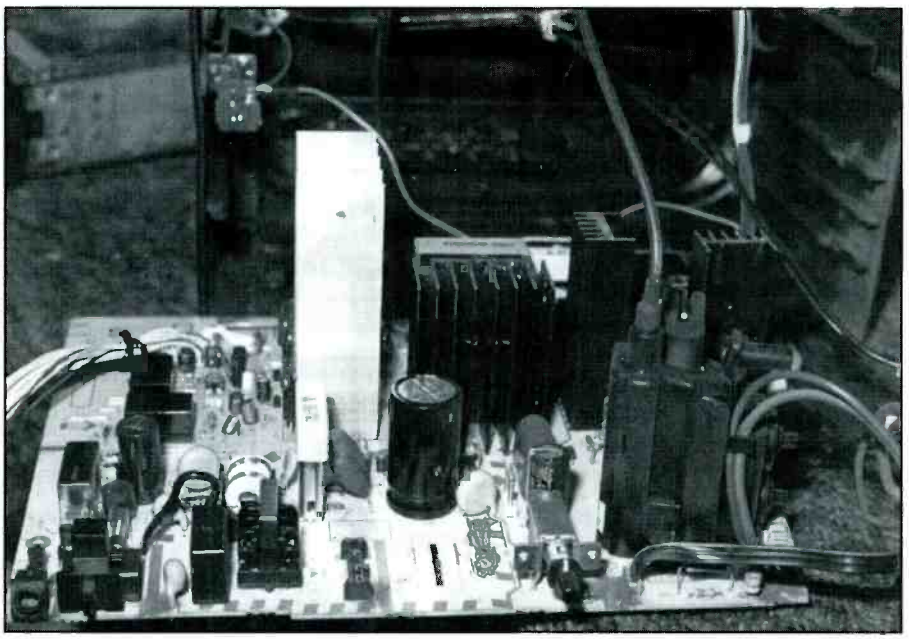

Figure 1. If you're working on a set that shuts down intermittently, check for poorly soldered connections, open or leaky diodes, open or leaky transistors, and IC regulators.

Possible causes of shut down

Intermittent chassis shut down can be caused by a number of problems: poor grounds, bad part connections, and poor soldered connections. A leaky or open diode, transistor, or IC regulator can cause intermittent shut down symptoms. The intermittent system control IC can produce intermittent shut down. Suspect a change in critical low-ohm resistors, open or leaky electrolytic and bypass capacitors that result in intermittent shut down. Improper adjustment of the B+ control caused chassis shut down in the early TV chassis. Intermittent shut down, when one changes the channel of the TV, might result from a chassis modification, and on it goes.

Poorly soldered connections

Cold solder joints, or otherwise poorly soldered connections to the driver transformer in the horizontal output circuits has caused chassis high voltage, and intermittent shut down problems. Sometimes, you can hear the relay click off and on when the chassis shuts down. Poor connections at the mounting screws of the horizontal output transistor and heat sink to PCB can cause intermittent shut down.

Check for poor soldered connections between surface mount components and PC wiring. Bad ground connections on the main PC board and horizontal output transistor (H.O.T.) heat sink can cause intermittent shut down symptoms.

Intermittent shut down problems were noted in one RCA CTC146 chassis and a click of the relay was heard as the chassis shut down. If you should encounter this kind of problem in one of these sets, locate the horizontal driver transformer

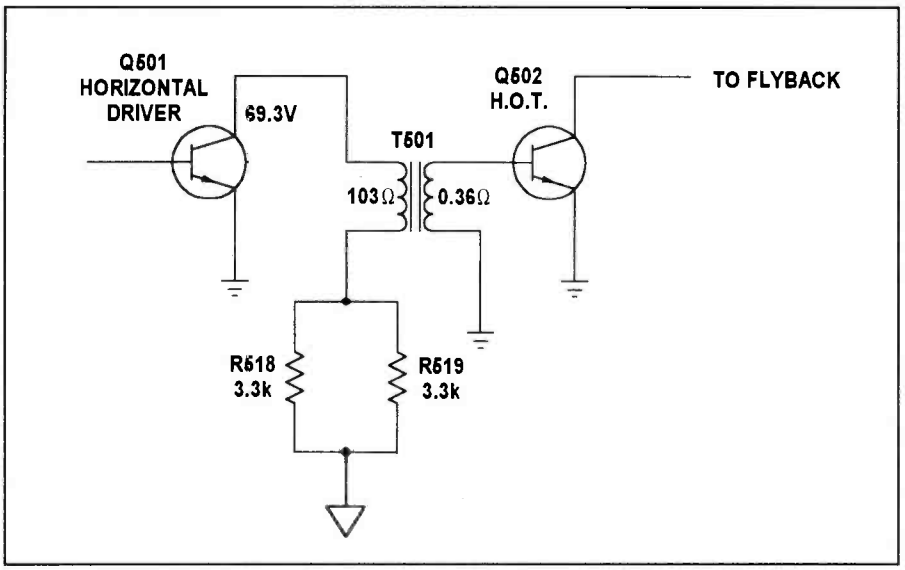

Figure 2. A likely cause of intermittent shut down in an RCA CTC146 is bad solder joints between the horizontal driver transformer (T501) terminals and the PC board. A good first when you encounter one of these problems is to resolder all of these terminals.

Davidson is a TV servicing consultant for **ES&T.**

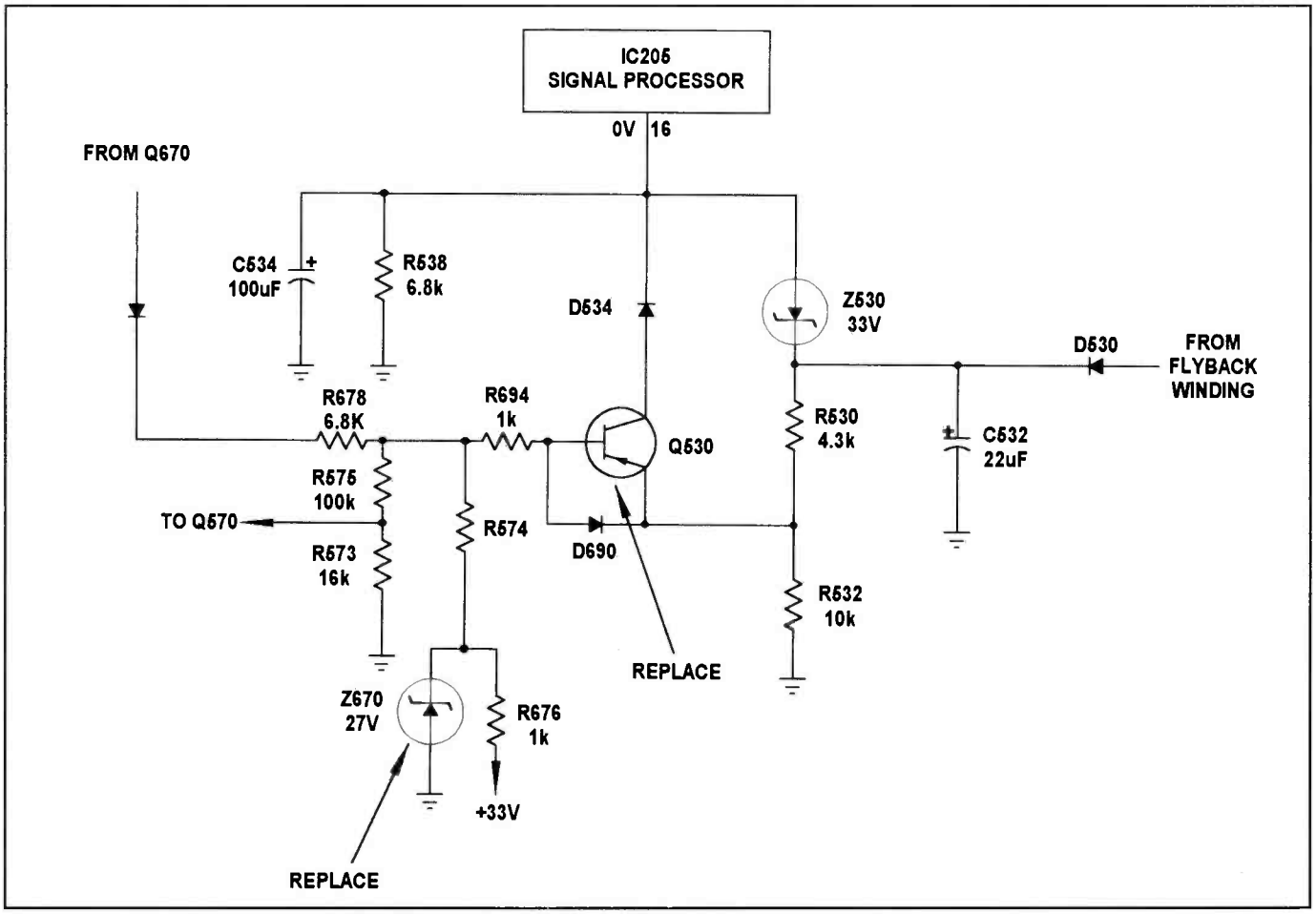

Figure 3. When you observe intermittent shut down in a Philips 19B1 chassis, check D670, Z670, D534, D690, Z530, and regulator transistor (Q530) to determine if any of them are open or subject to leakage.

(T501) and resolder all transformer connections to the PC wiring (Figure 2). This same driver transformer has caused many dead or intermittent chassis start-up symptoms. Check the continuity of each lead to the next part in the horizontal circuits with the 200Ω scale of the DMM.

Suspect diode CR4118 off of Q4106, a 12V regulator, if the set turns on then shuts down immediately. CR3104, a 5.6V zener diode, when faulty, has caused immediate chassis shut down in the RCA CTC145 and 146 chassis. In another case, when the set didn't turn on, and it was found that the cause was that the 5V standby voltage was too low, the ultimate cause of the problem was a leaky analog Interface Unit (AIU) U3300 microprocessor. If you suspect that a set you're servicing has this problem, check for a low 5V (4.9V) at pins 4 and 29 of U3300 in the RCA CTC145 chassis. Check for poor B+ resistor leads that feed the primary winding of the driver transformer.

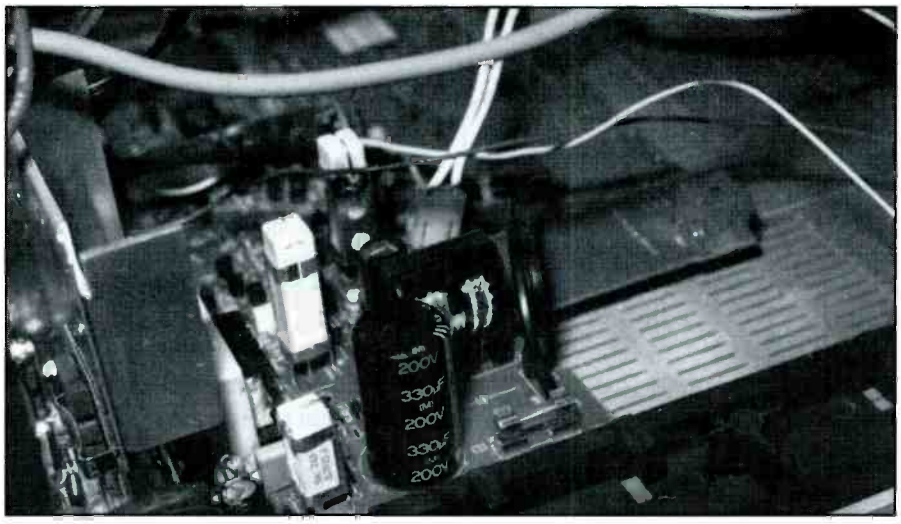

Figure 4. Replace leaky DP01 to cure intermittent shut down in an RCA TX82 13 inch set.

Diode shut down symptoms

Next, check for open or leaky and intermittent diodes in the low voltage supply circuits. Other possible suspects are leaky or intermittent diodes in the start-up and shut down circuits. Keep in mind that rectifier diodes and zener voltage diodes have been known to check normal out of the circuit and break down under load.

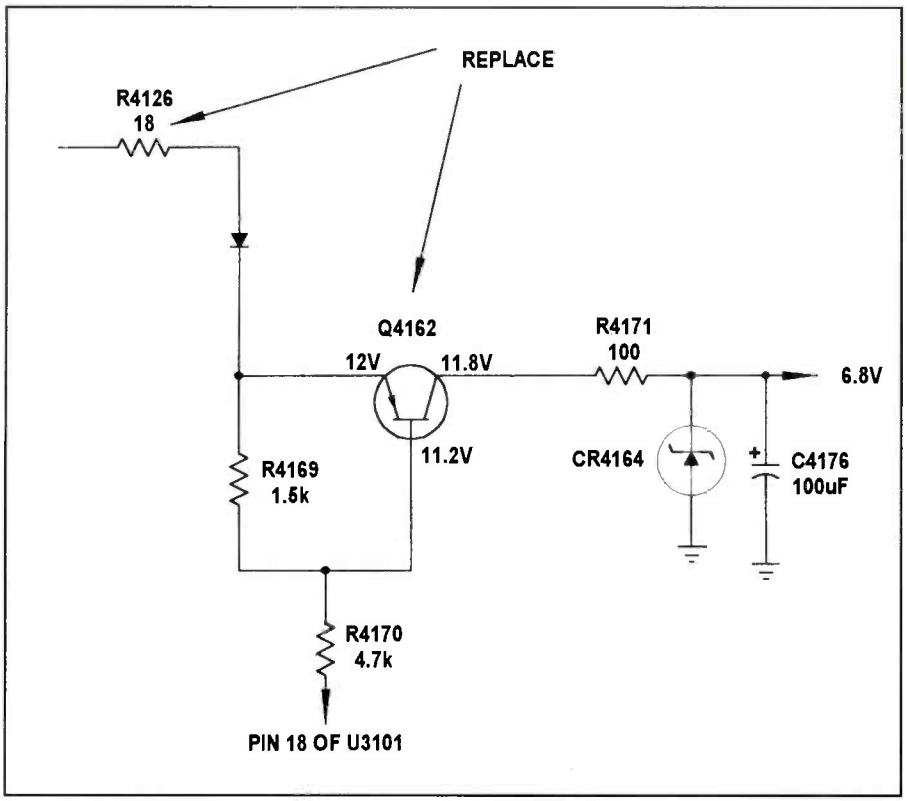

Figure 5. Replace both transistor Q4162 and resistor R4126 (18Ω) when the symptom is intermittent shut down in an RCA CTC167 television chassis.

Intermittent zener diodes connected to regulator transistors have been known to cause intermittent shut down problems. Sometimes, the chassis might appear dead, then start-up, and then shut down again. If you observe this behavior in an RCA CTC169 chassis, check CR4101, CR3101 (5.6V zener), and C4145 off of pin 3 of transformer T4102.

In one case involving a Phillips 19B1 chassis, the intermittent shut down problem was accompanied by arcing in the picture. In this case, the problem was determined to be caused by a defective zener diode. Zener diode Z670, a 27V reference diode, caused intermittent shut down. This diode is found in the base of the over-voltage/high beam current IC shut down circuits.

During normal operation, pin 16 of IC250 is at 0V. When the set is in shut down, the voltage increases to 0.8V. Check the voltage on pin 16 of IC250 when the chassis is in shut down mode (Figure 3). Check diodes D670, Z670, D534, D690, Z530, D530, and regulator transistor (Q530) for leakage or open conditions. Defective zener diode Z670 is within the 33V source feeding the shut down circuits.

Improper B+ adjustments

Improper adjustment of the B+ control in the older sets can cause intermittent shut down symptoms. Most of these symptoms occurred with power lines that were poorly regulated. In some of these cases, in the evening when the power line was loaded down, causing reduced voltage, the TV would operate. When the ac line voltage became higher in the day time, the TV would shut down.

If you observe intermittent shut down problems that seem to be caused by incorrect power line voltages, check for defective start and run diodes, both rectifier and zener diodes, in the power supply and regulator circuits. In one RCA CTC125 chassis, the chassis would operate when the power line voltage was 118Vac, but would shut down when the power line voltage increased to 125Vac. Replacing intermittent zener diode CR110 (75V) cured the intermittent shut down problem.

An RCA CTC159 chassis that I encountered would operate with the variable isolation transformer set at 95Vac, but shut down at normal line voltage of 120Vac. Replacing CR4160 solved this intermittent problem.

In one unusual case, intermittent shut down symptom in an RCA TX82 13-inch set was followed by a motorboating sound in the audio. Replacing leaky DP01 solved this problem (Figure 4).

Intermittent resistors cause shut down

A change in resistance of critical resistors in the emitter circuits of regulators and power supply circuits can cause intermittent shut down problems. Usually, these resistors are only a few ohms and seem to increase in resistance. In fact, only a fraction of an ohm or less might cause the intermittent shut down symptom.

Suspect low ohm resistors in the various regulator and isolation resistors in the low voltage power supply sources. Sometimes, these small resistors run hot and change resistance. A small increase in resistance can decrease the output voltage of a transistor regulator.

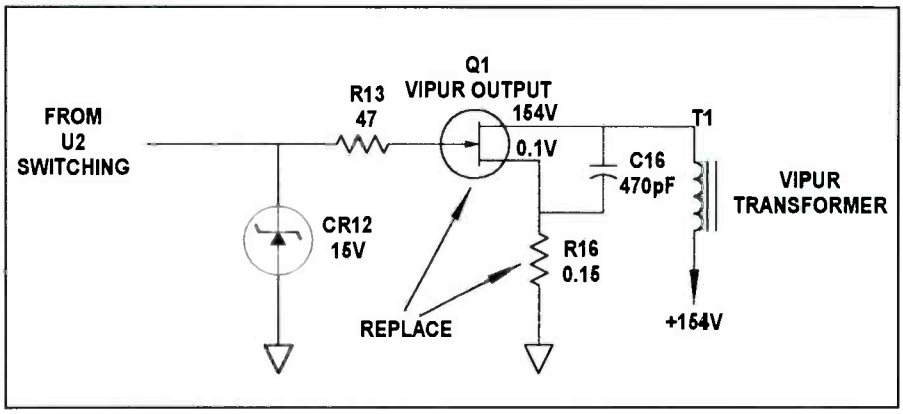

Figure 6. In the case of one RCA CTC130B television chassis, the set began to cycle off and on after several minutes of operation and resistor R16 was hot. Replacement of VIPUR output transistor Q1 and resistor R16 solved the problem.

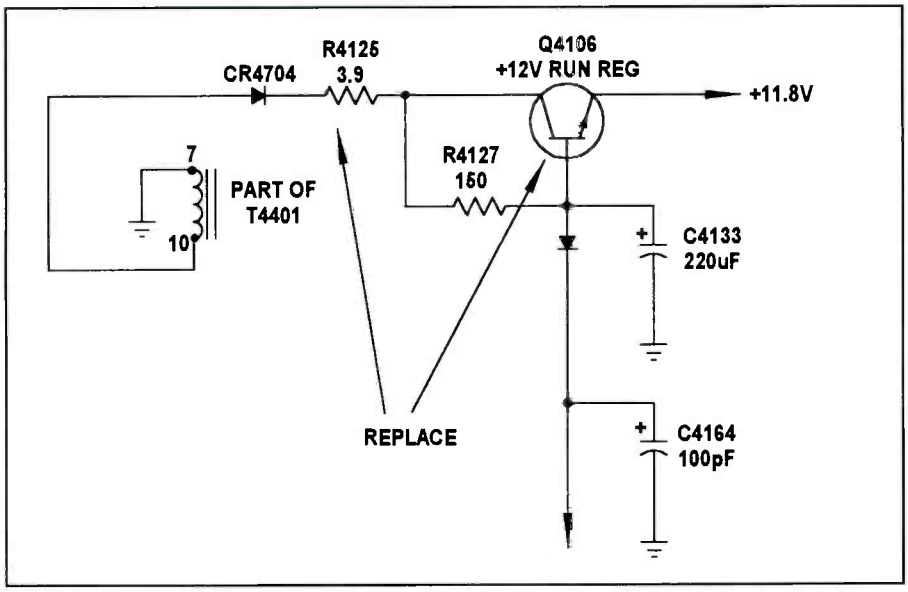

Figure 7. If you observe intermittent shut down in an RCA CTC166 or 167 television chassis, replace resistor R4125 and transistor Q4106 in the 12V run voltage supply.

In one RCA CTC167, there were times when the chassis might operate for a few minutes, then lose horizontal sync, and go into intermittent shut down. The tell-tale sign was that when the picture went out of sync, the 6.8V source voltage changed. The transistor Off/On Switch (Q4162) has been noted in both the CTC166 and 167 chassis for intermittent shut down. After Q4162 was replaced with a universal replacement, the chassis still acted up. A low emitter voltage on Q4162 was traced back to resistor R4126 (18Ω). The overheated resistor had increase to 88Ω. Replacing Q4162 and R4126 solved this intermittent problem (Figure 5).

Some other components that you should treat as suspects when you encounter intermittent shut down problems are small resistors in the emitter circuits of the voltage regulators, output, and switching transistors. In the case of one RCA CTC130B TV, the set might go off and on after several minutes of operation. Resistor R16 (0.15Ω) was running extremely hot. The resistance of this small value resistor had increased to 2.7Ω. Replacement of transistor Q1 and resistor R16 solved this problem (Figure 6).

Any time you encounter intermittent shut down problems, check for changes or opens in resistors that are tied to the main control microprocessor terminals in the shut down or horizontal circuits. Often critical voltage measurements on the shut down pin terminal can indicate a defective IC or voltage source. Extremely low voltage on the shut down terminal 6 of Control Micro U3101 has been known to cause intermittent shut down. An open or intermittent 200kΩ resistor from the 9V source caused shut down in one RCA CTC167N chassis.

Pulses off and on

There are quite a few different components in the power supply that can cause the set to shut down, then turn back on, and cycle like that indefinitely. This symptom of pulsing off and on can be caused by defective diodes, capacitors, or transistors. The flyback makes a characteristic sound when this pulsing occurs. Sometimes, the pulsing chassis might start-up and shut down. In other pulse on and off occurrences, the high voltage shuts down before any picture appears on the picture tube.

If you should observe these symptoms in RCA CTC166 or 167 chassis, check all diodes in the error amp and sawtooth generator circuits. When this symptom is observed, it's usually a diode that has become leaky. To check a suspected diode, desolder one end of the diode and use the junction test of the DMM. If you're not sure if a diode is bad or not, replace it. They're inexpensive compared to the time you'd spend going back over this area of the set if it turns out that it is bad and you didn't replace it. Check diodes CR4104, CR4101, CR4120, and CR4103 when the symptom is chassis shut down. Replace capacitor C4108 when replacing defective CR4103 for chassis shut down. Do not overlook R4125 (3.9Ω) in the 12V run regulator supply as a possible cause of a pulsing on/off and chassis shut down (Figure 7).

Check CR4101, CR3101 (5.6V zener), and C4145 off of pin 3 of switching trans-

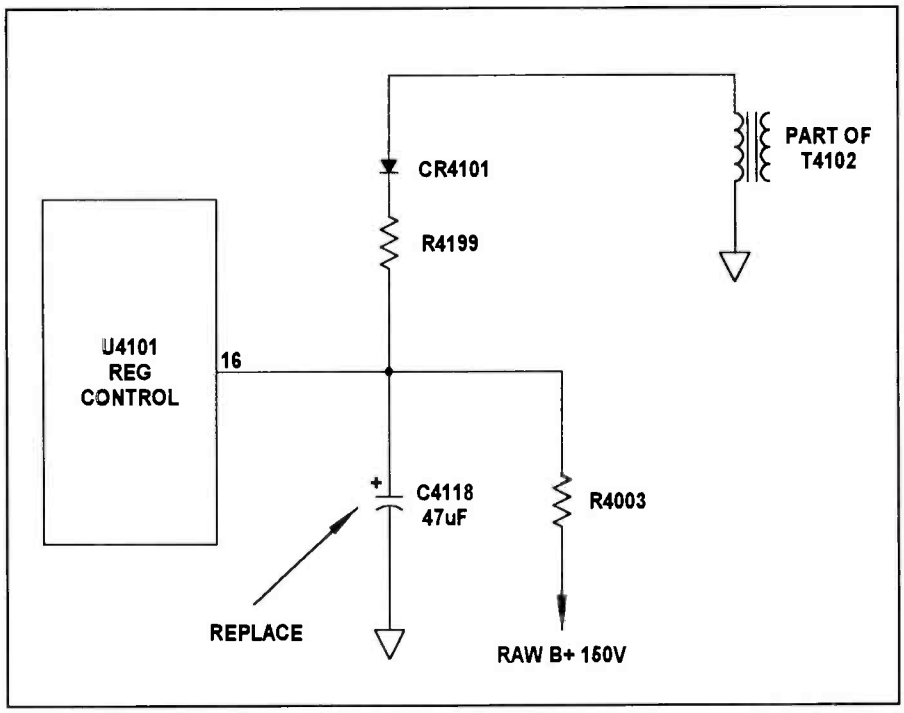

Figure 8. Capacitor C4118 (47μF) has been the cause of intermittent shut down problems in RCA CTC169 chassis. Replacement of this device usually cures the problem.

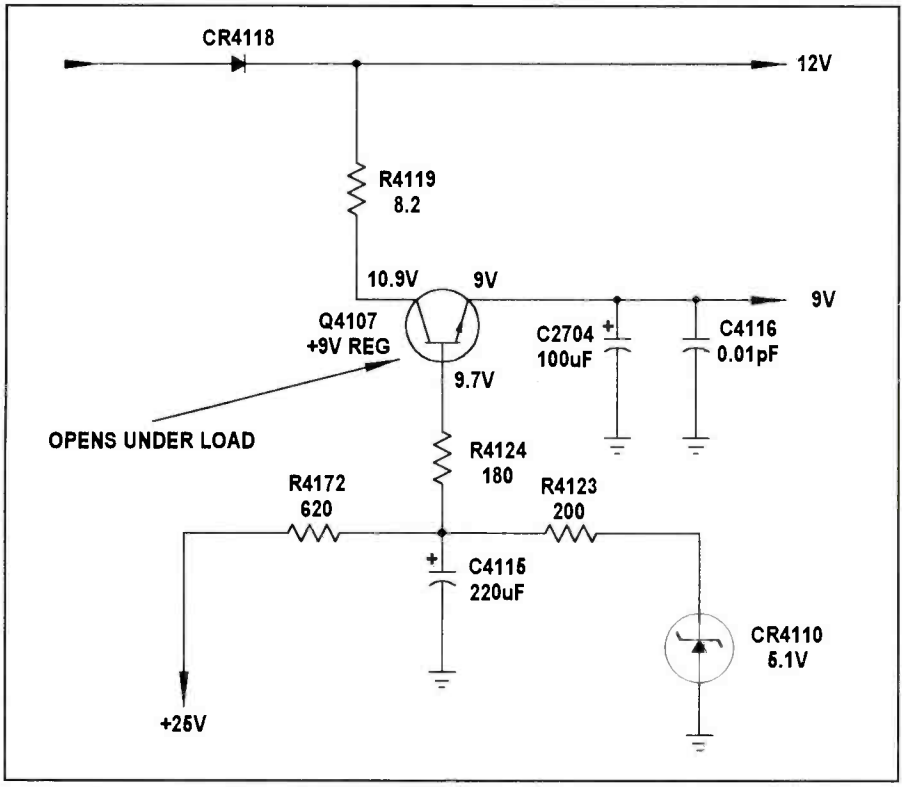

Figure 9. In one RCA CTC145 television chassis, the 9V regulator transistor Q4107 opened under load producing intermittent shut down symptoms. Replacement solved the problem.

former (T4102) for a intermittent start-up and shut down symptom in the RCA CTC169 chassis.

Intermittent shut down in a Phillips C5 chassis might be caused by Z402, R402, and C401. Resolder all terminal connections on transformers T463 and T488 for intermittent start-up and shut down symptoms in the same chassis.

Capacitor shut down symptoms

Intermittent or leaky bypass and electrolytic capacitors in the regulator, connected to system control ICs, and in the low voltage circuits can cause intermittent shut down problems. Leaky bypass or electrolytic capacitors are easily located with critical voltage tests. Often the voltage is considerably lower when the capacitors have leakage. Open capacitors are more difficult to locate.

Start by checking the suspected capacitor in-circuit with an accurate capacitor tester. Remove one terminal from the PC board for accurate measurements. Sometimes, shunting a known capacitor across the suspected one can quickly determine if the capacitor is defective. If the circuit returns to operation with a known-good capacitor shunting a suspected capacitor, you have confirmed that the suspect is guilty.

Check for an open or dried-up electrolytic capacitor in the voltage regulator circuits when the problem is intermittent start-up and shut down symptoms. Suspect a defective regulator electrolytic when the chassis will operate on a lower ac line voltage and shut down at normal line voltage (120Vac).

I encountered one RCA CTC169 chassis that would start-up just fine sometimes, and at other times would shut down. The standby B+ regulator IC (U4101) controls the on/off standby TV operation. If you encounter this problem in one of these sets, go directly to pin 16 of U4101 and check for a positive 10.3V. This voltage is very critical for regulation control. The TV operates at 10.3V and shuts down at 7.5V.

Since the regulator (U4101) provides the standby supply voltage, the regulator circuit operates when ac power is applied. The raw B+, 150V, is fed through R4003 and begins to charge capacitor C4118. IC U4101 regulation turns on when the voltage at pin 16 raises above 10.3V. The regulator stops if the voltage falls below 7.5V.

If you observe low voltage at pin 16 of this IC, inject a 10.5V voltage from your external power supply to drive the chopper transistor and turn the set on. If the chassis begins to operate, you know that the problems are related to the regulator control IC and circuits. Replace C4118 (47μF) electrolytic when the problem is intermittent shut down (Figure 8).

Defective transistor shut down

Intermittent start-up and shut down symptoms can be caused by intermittent regulator transistors and ICs. Open or leaky regulator transistors can result in shut down problems. When you're dealing with intermittent shut down, monitor the various voltage sources. Often you will find a intermittent transistor regulator and zener diode that should be replaced at the same time in the low voltage supply sources.

If you observe shut down problems in an RCA CTC145 chassis, check diode CR4118 for leakage (Figure 9). It might be the cause of the problem. Monitor the regulated 9V source at the emitter terminal of the 9V regulator transistor (Q4107). Q4107 has been known to break down under load, resulting in 0V output at the 9V source. When this happens, the set goes into intermittent shut down. Replace Q4107 with the manufacturer's exactly replacement, part number 177788, or with a universal replacement. Do not overlook defective IC voltage regulators and control system processors for intermittent shut down problems.

If the power relay is defective, it may turn on spontaneously, without anyone operating the remote or manual control. Another symptom of a bad relay is intermittent shut down of the set after turn on. Recheck the suspected relay when chassis shuts down after warm-up.

Conclusion

When the problem is in special circuits in a TV set, nine times out of ten the cause is failure of the same component or components. In such cases, if the service center maintains case histories of troubleshooting results, these records can speed up service time upon the TV bench. Going directly to the components that are the most likely causes of failure in a certain chassis can save service time. Critical voltage and monitoring tests can help to locate the intermittent component when the symptom is chassis shut down. ■

Components catalog and internet features

Jameco Electronics has just released a new catalog and updated website. The 148-page catalog features thousands of ICs, components, tools, test equipment, and computer products for OEMs, engineers, educators, and service/repair technicians. More than 215 new products have been added, including new lines of test equipment by Fluke and BK Precision, semiconductors by Teccor, 3M anti-static equipment, and industrial analog meters by Triplett.

An on-line catalog at <www.jameco.com> features product photos, expanded descriptions, and a quicker ordering process from a secure web server.

1355 Shoreway Road, Belmont, CA 94002 Phone: 1-800-831-4242, Fax: 1-800-237-6948, Website: http://www.jameco.com, E-mail: info@jameco.com

Circle (80) on Reply Card

Industrial/electronic and specialty lighting catalog

Waldmann Lighting offers their 36-page color catalog featuring extensive machine tool, magnifications, and specialty lighting products and modifications. The catalog highlights the company's standard and waterproof halogen lighting, waterproof tubular fluorescent lighting, inspection and specialty lighting, including ESD Safe/UV magnifiers, and their new microscope and scope arm.

A complete line of magnifications lighting, featuring the "Omnivue Series" with fully rotational lens, extended ("max") arm version, and dual light levels, is also offered. The magnifiers are useful for assembly, inspection, and soldering applications.

Specialty lighting products include ESD Safe and UV task lighting and magnifiers for lab and production workbenches. Plus, the new microscope is ideal for applications where additional power is required than what traditional magnifications lights can offer. An arm assembly "optic holder" is also available, which can be retrofitted to work in conjunction with virtually any microscope.

9 West Century Drive, Wheeling, IL 60090, Phone: 800-634-0007, Fax: 847-520-1730, Website: www.waldmannlighting.com, E-mail: waldmann@enteract.com

Circle (81) on Reply Card

Spring '99 tool, tool kit, case, and test equipment catalog

Specialized Products has released its new comprehensive Spring '99 catalog. The 384-page publication features a wide assortment of products for service applications in telecom, LAN, fiber optic, wireless, medical electronic, and computer industries.

Technicians, field service managers, and engineers can choose from a complete assortment of electronic test equipment featuring component testers, digital multimeters and cable analyzers, frequency counters, function generators, digital oscilloscopes, power supplies, and a large selection of cases. The computer testing selection includes benchtop test equipment, EPROM testers, and SIMM testers. LAN test equipment choices include analyzers, Category 5 testers, continuity testers, and fiber optic test equipment. The telecom selection features bit error rate testers, digit grabbers, digital butt sets, and transmission test sets. For fiber optic test equipment, choose from cleavers, light sources, optical time domain reflectometers, power meters, strippers, and more.

1100 South Kimball Avenue, Southlake, TX 76092, Phone: 800-866-5353, Fax: 800-234-8286.

Circle (82) on Reply Card

Audio books and products catalog

Audio Amateur Corp. announces the 1999 edition of the Old Colony Sound Laboratory Catalog. This year's catalog features books on all aspects of audio, software, PC boards, test CDs and equipment, and vendor sources for all areas of audio construction and modification.

The catalog is also available on-line at <http://www.audioXpress.com>.

Circle (83) on Reply Card

Videotape describes ergonomic workstations

A new videotape from All Metal Designs discusses the benefits of ergonomic workstations and shows how they can lower healthcare and insurance costs while meeting new and impending state and OSHA standards.

The videotape demonstrates how a single operator can adjust worksurface height — the single most important ergonomic feature for industrial workstations. The tape also shows how workstations can be customized, using a wide variety of accessories.

OSHA and more than two-thirds of all states have adopted, or are considering, comprehensive standards governing workplace ergonomic hazards; and the National Institute for Occupational Safety and Health (NIOSH) mentions properly-designed adjustable workstations as part of its comprehensive strategy for complying with these emerging legal requirements.

700 Windcrest Drive, Holland, MI 49423, Phone: 616-392-3696, Fax: 616-392-2922, E-mail: info@allmetal.com, Website: www.allmetal.com

Circle (84) on Reply Card

Competition and what to do about it

by Alvin G. Sydnor

Most of the time, I get a great deal of gratification writing about technical subjects for this magazine, but this time I would like to pass along some of my thoughts, observations, and experience from my 45 years in the electronics field on the business side of the servicing business.

Facing competition

Competition must be faced with the courage of a business person. Please note that I did not say engineer or technician.

This article will convey some very important points to the electronic technician and owners of small, as well as a large, service organizations.

It was John W. Newbern who said "People can be divided into three groups."

1. Those who make things happen
2. Those who watch things happen
3. Those who wonder what happened

Another individual has changed the three to:

1. Those who play the game
2. Those who watch the game
3. Those who don't even know there is a game being played

Some of the world's most brilliant scientist, engineers, technicians, and inventors have lost in the end because they were not shrewd and intelligent in business. As an example; Edwin Armstrong was a brilliant electronic engineer who invented and patented FM broadcasting and when business people saw the great opportunities of his system, they won all the benefits. Armstrong became so frustrated that he committed suicide.

Another brilliant experimenter was Philo Farnsworth, who invented and developed the first system of electronic television that rivaled Zworykin's system but lost all to shrewd and intelligent business people and died a poor broken hearted man. There are many answers to the problems of running a successful electronics service business. I don't have all the answers, but I will try to express those that I feel are important.

First, the philosophy of science/electronics is not the same as the philosophy of business. You may know Kirchhoff's law and may even be an expert in troubleshooting and circuit analysis, but know very little about operating a successful electronics business.

Business concerns

A businessman is concerned with person-to-person relationships. He deals with intangibles. One of his most effective tools is the emotional appeal. His time in dealing with a customer requires the utmost persuasive tactics.

You read very little about the history of a business transaction, but you do read and hear a lot about the success, as well as the failures. Remember that poor business judgments can lead to prompt and considerable financial losses.

Meeting the competition: the right way

Competition means that you *must* be awake to opportunity. Your eyes, ears, hands, and feet must be in the right place at the right time and in the right way and your tongue *must* be used to your advantage. Participating in unwise decisions must be guarded against. Never undersell. Underselling will drag a business down to bankruptcy and then invites its owner to his own sheriff's sale. Successful businesses never sell their services below cost. True, you must compete in price as well as quality, but let your competitors reduce their prices first.

Here is something that every electronic technician operating a service business should remember: it is an easy matter to reduce prices, but after your customers have become well acquainted with your cut-rate prices, it will be difficult to raise the prices to what they must be to stay in business. There is no method in this madness. The tombstones that mark the graves of those that cut their own throats in business are countless. Compete by securing more customers, not by price cutting.

The success of any business is accelerated by strict attention to the details. By neglecting business details, the most well-educated technician will not succeed in running a profitable business.

Profits can become losses and winners can become losers when the emphasis is on short-term gains, which can overpower the efforts to build for the future.

Taking the long view

One of the big problems of a service business is that some continue to operate with a game plan featuring short-term profits, while their competitor has been building its image and share of the market with a plan that calls for long-term gains, even if in some years there are no short-term profits. What is really needed is a revolutionary idea or ideas to turn losses into profits.

Selling service

Getting to know your customers and their needs is very important. The attitude and the name of the game in the electronics industry has always been, faster, smaller, and cheaper, whether the customer needs it or not. I believe the whole industry has to wake up. The talk among children in the playground these days is about which platform rules and websites, and the kids even know the difference between megabytes and megahertz. Everyone is becoming more savvy about technology.

I remember when gas was 30 cents a gallon and the place you went to get it was called a *service* station, and for a good reason. The people at the service station cleaned your windows, checked your oil without being asked, and some even checked your tire pressure.

By giving this attention, the service stations gave you the impression that they

were happy to have your business, even if you only wanted a dollar's worth of gas. The customers you want to have and keep are those that are willing to pay a little more as long as they get the service they need and want.

Creativity

I have found that many managers/owners of electronic service facilities postpone coming to grips with a business issue until the last possible moment. But keep in mind that timing is very important. The art of decision-making is closely akin to the creative process. Many business problems can be solved by being creative.

Those who have studied creativity believe that it occurs in five stages:

- Preparation
- Development of possible solutions
- Incubation
- Insight
- Evaluation

The first stage, preparation, is the stage in which one concentrates on the gathering of facts. If a problem is to be solved, it is helpful to restate it in several different ways and essential to suspend judgment while doing so. The development of possible solutions, while suspending judgment, comprises the second phase of the creative process. Then comes what I believe is the most important phase, often called "incubation."

It is often recommended that we "sleep on it" before making a decision. What you want to do is put it aside, clear your brain, and let it operate subconsciously, while your attention is turned elsewhere. The next phase is called "insight," which often occurs when it is least expected. A fresh approach or something we had overlooked suddenly flashes into our consciousness. This may or may not be the answer we need. There is a final stage of evaluation and testing.

Remember that the shoe that fits one person pinches another: there is no recipe for living that suits all cases. Also, there is no recipe for managerial success, because each of us are individual: but an important ingredient is our decision-making skill, a skill that may be improved by reflecting upon it.

Strategic management

Strategic management should start with the development of a comprehensive "mission statement." The process is not an easy one, but it is very important. Since the major goals for every business organization are profit and survival, the mission statement should identify how the business intends to achieve them. It should be a statement of the basic goals, characteristics, and philosophies that will shape the strategic posture of the firm. It should also provide the basis for an enduring culture that will guide future activities of the firm.

The mission statement sets the business apart from other businesses in the same industry by identifying its scope in terms of its services, its markets, and its technological areas of interest, and it should reflect the values and priorities of its owner. Many good mission statements are short and easily understood.

The mission statement should answer the following questions:

1. What business are we in?
2. What customers do we serve?
3. Why does our firm exist?
4. What area of electronics do we want to be in?
5. Why are we in business?

The mission statement should ask these three fundamental questions.

1. *Who* is the firm's primary market?
2. *What* is the firm's basic product or service?
3. *How* is the firm going to deliver the product or service (this is a technology issue)?

The mission statement should not be so broad that it becomes a meaningless platitude. But, it should be clear enough to initiate action. Thomas Watson, Jr., founder of IBM, expressed it well when he said; "The basic philosophy, spirit, and drive of an organization have far more to do with its relative achievements than do technology or economic resources, organizational structure, innovation, and timing. All these things weigh heavily on success. But they are, I think, transcended by how strongly the people in the organization believe in its basic precepts and how faithfully they carry them out."

The idea of generating *basic precepts* is to get beyond specifics and determine the essence of what is actually being done by the company. For example, a railroad is, of course, a railroad. But more generally, it is providing transportation. Here are a few other examples:

- Toy manufacturers sell youth entertainment
- Oil companies sell energy
- Computers manufacturers sell machines for solving problems
- Guard services companies sell security
- Banks sell financial services

You must be alert and ready for change because as your business grows, the environment within which it must interact will be changing and you will have to rethink and redefine your mission. Your original mission statement may have become too narrow or simply no longer be on target. Without a proper and updated mission statement, the organization will ultimately be doomed to failure.

Attracting and satisfying customers

The days of take the money and run are over and you must realize that today's customers have many options. For you to get them to select you and stay with you, you must give them good reasons to come back and recommend you. Three good starting points are

- quality,
- fair prices, and
- top-notch customer support.

So you say, yes this sounds good but that is going to cost money. But keep in mind that the pay back can be substantial and can develop into long-term relationships with existing customers and referrals that will bring in new customers.

What is important to remember is that today's customers are better-educated and have higher expectations than ever before. When you lose a customer, the first thing that you must do is to find out why he left and do it quickly. Even when you find out why he left, you may never get him back, but what you have to do is make some changes in your operation so that you never lose another customer for the same or similar reasons.

The choice is clear; you should take a

NEWS

(from page 5)

"The CE, IT, and Telecommunications industries all have different business models, product cycles, and regulatory environments. And, we speak different languages. But, increasingly, our products are called on to work together while our industries are creating new categories of products," remarked CEMA President, Gary Shapiro. "Today's discussion is an example of how companies who once defined themselves as CE or IT companies are now thinking and working together across traditional industry boundaries. I am pleased that CEMA can provide a platform for these discussions."

Forum speakers included a review of convergence trends by Mike Grubbs, Director of Convergence Products for Gateway and Chairman of CEMA's CIT Division, and Peter Lesser, President of X-10 and Chairman of CEMA's IHS Division. Henry Chiarelli, Radio Shack's Senior Vice President of Business Devel-opment, New Business and Emerging Technologies, discussed the growing importance of convergence and broadband technologies in the consumer retail market.

Tricia Parks, President of Parks Associates, a Dallas-based market research firm, presented the latest consumer research on home networking and convergence technologies.

Mark Bridgwater, Vice President of Marketing for Digital Harmony, Dave Hill, Vice President of Residential Technology at AMX, and Herman Sperling, Vice President of Marketing for Harman Consumer Group, joined forum speakers in a panel discussion moderated by Gary Shapiro.

More than a dozen manufacturers participated in the convergence demonstration following the forum, showcasing the latest convergence products and connectivity solutions.

CEMA is a sector of the Electronic Industries Alliance (EIA), the 75-year-old Arlington, Virginia-based trade organization representing all facets of electronics manufacturing. CEMA represents more than 500 U.S. manufacturers of audio, video, accessories, mobile electronics, communication, information technology and multimedia products that are sold through consumer channels.

long-term view toward building your business, which is to focus squarely on your customers. Finding ways to replace lost customers is very difficult and costly, and disappointed customers can and will spread bad news to other people about you and your business.

Customer loyalty

Keeping customers is a lot easier and more profitable than finding new ones. There is a difference between customer loyalty and customer satisfaction. There is what is called false loyalty, which occurs when the customer has a limited choice of where to go for the service you provide. As an example, a customer has a problem with a VCR that he would rather have serviced by the factory, or an authorized service center, but neither are close enough. Your service center is just down the street.

In this case, the customer's apparent loyalty is due to a lack of a good substitute. However, if he finds out that you can provide the same or better service than he expected, he will abandon the factory for your service center.

Now, let's say that this customer gets you to service his VCR, but is not satisfied with your service. Now, what you have is what is called a "hostage customer" (the term comes from an article "Why Satisfied Customers Defect," by Thomas O. Jones and W. Earl Sasser, Jr., published in the Harvard Business Review, Nov.–Dec. 1995, pp 88 through 99). It is very dangerous to ignore hostages when they defect to a competitor because they now become terrorists (ex-customers) who leave conceptual bombs with your satisfied customers. The terrorists will talk about their bad experiences with your service and rave about your competitors service. This whole thing can spread like wild fire.

The free enterprise system

Most people in the developed world earn a living within a system called free enterprise. This is a very familiar term, but few of us have ever bothered to analyze it. What is free enterprise, and what does it do for us?

Free enterprise is the right of anyone to go into any business they chose; build up a product or service and try to sell it. But that is only half the story. The free enterprise system also means that you have the right as a prospective buyer to accept or reject any product or service being offered.

Under the free enterprise system, you have the right to build a house and sell it. Also, it is the right of the prospective buyer to purchase your house if it's what they want and the price is right. This means that the person who has something to sell and the person who is in the market to buy, meet on terms of equality and freedom, without compulsion or interference, so long as common laws of justice and decency are observed.

A free enterprise system provides the right of all who live within it to offer whatever they have created, whether a product, services, and skills, to other individuals who are just as free to purchase them or not to purchase them.

Free enterprise tends to bring out the best of our abilities for two reasons. First, it assumes that people want more than a bare, bleak existence, and are willing to work for better lives when given the opportunity. Second, free enterprise is competitive and necessary. Having to compete is no bed of roses. But the right to compete is one which we wouldn't want to lose. It would be losing all opportunity and freedom itself.

Competition breeds champions in sports, industry, and elsewhere. Because of competition, the typical company has to be efficient. It must pay good wages and have good relations with its customers and its employees. It must earn a good profit for growth and expansion. Should your business fail to do any of these, it cannot stay in business and is doomed for failure.

Free enterprise is not perfect, as mankind is not perfect. But, free enterprise gives full scope to many of man's highest virtues: the courage to try unknown paths; his self-reliance, capacity for work, and determination to build a better world.

Being resourceful and generating ideas

People who have ideas can make progress and those who make the best of their ideas by producing workable solu-

tions are those who succeed. The entrepreneur must aim to make a profit at the risk of loss, and has to be resourceful, which involves doing something. Those who fail to act on solving business problems are doomed to failure.

Rapid changes have become the norm throughout the world today, and the electronics servicing technician must be resourceful in altering his plans to meet new circumstances. The successful businessman is one who rapidly adapts himself to the changing business world. The well-adjusted individual is one who readily fits himself to a changing social, as well as a technical world. There is no thinking that can grasp all and every circumstance, so it's a good idea to expect the unexpected.

Generating ideas requires creativity, which is built upon a positive approach to any subject. If you are to increase your creative ability, you must develop a positive attitude toward the problem. My suggestion on how to develop creative ability is to look around and see what problems exist and must be solved.

Problem solving

We all have problems that have been around for some time, but how many times have we really taken a good look at them from a different viewpoint to find a better way to handle them?

We know that problems generally do not just go away by themselves — they must be solved. A good start is to write down all that we know about the problem and the solutions that have been tried. By listing these, we will have saturated ourselves with problems and everything connected with them.

Next, we want to write down all the ideas that we think might provide a solution. By ideas, I mean the wild ones, as well as those that seem sensible. Keep in mind that at this time we are not worrying about the correct or best solution — all we want to do is to free our mind of all negative thoughts and write down any idea we get. If you do this for an hour or more, you will come up with at least 40 ideas, some will be old and some will be new, but all will be directing you toward a solution. Don't be in a hurry at this point — let the ideas simmer in your mind for a while, jotting down any new ones that occur to you.

The next step is to evaluate all the ideas. At this point, we must be critical and positive when evaluating our ideas. Obviously, some of the wild ones can be tossed out because it is not possible to implement them at this time or possibly not in the future. Some of the less wild ones should be given some thought with a different approach since they may be practical. My suggestion is to group the ideas into three categories; "Excellent," "Possible," and "Not feasible." This should be done for each idea, since the act of rewriting will help you to judge their merits. When the list is completed, go over it again, making sure no further juggling is necessary.

Now, you are ready to make a final evaluation. As you do this in the "excellent" category, you may still get more ideas. These new ideas should be placed in the proper group for evaluation. Up to this point, you have used your creative ability to generate possible solutions — now you must use your judgment as to which idea best suits your circumstances.

One final word — take a look around and ask what do Hewlett-Packard, 3M, Microsoft, and Intel have in common. They understand what it is that their customers want and they all manage to satisfy those needs in a very complete manner. In other words, if you have a good product or service, people will buy it. Sticker price will not be an issue.

And finally, don't solve your business problems by copying what others have done or are doing. On the other hand, don't totally ignore what others are doing. ■

CLASSIFIED

Classified advertising is available by the word or per column inch.
By-the word. $1.65 per word, per insertion, pre-paid Minimum charge is $35 per insertion. Initials and abbreviations count as full words. Indicate free category heading (For Sale, Business Opportunities, Miscellaneous, Wanted). Blind ads (replies sent to ES&T for forwarding) are $40 additional. No agency discounts are allowed for classified advertising by the word. Contact Alycia Nicholsen at 516-681-2922 to place your classified ad (by-the-word). Mastercard, VISA, American Express and Discover are accepted for FAX or mail orders.
Per column Inch (classified Display): $235 per column inch, per insertion, with frequency discounts available, 1" minimum, billed at 1/4" increments after that 10" maximum per ad. Blind ads are $40 addition. Reader Service Number $25 additional to cover processing and handling costs. (Free to 4-inch or larger ads.) For more information regarding classified display advertising please call 516-681-2922. Optional color (determined by magazine) $150 additional per insertion.

Send your order, materials and payments to:
Electronic Servicing & Technology, 25 Newbridge Road, Hicksville, NY 11801
Attn: Classified Department Ph: 516-681-2922 FAX: 516-681-2926

FOR SALE

SENCORE, TEKTRONIX, HEWLETT PACKARD (all models). We **BUY, SELL, & TRADE**. Please call **"CHOICE ELECTRONICS"** for all of your test equipment needs. Complete financing options available. Call 1-800-609-0677, 605-361-6386 ask for Lance Tople.

TV CASE HISTORIES: Volume 7 with 3,045+ histories. Satisfaction assured. Only $59 (plus $3.25 shipping). Over 9,200 books and supplements sold with only 1 returned for a refund! **Mike's Repair Service**, P.O. Box 217, Aberdeen Proving Ground, MD 21005. Same mailing address 35+ years. Send SASE for samples. 410-272-4984,1-800-2-FIX-TVS 11a.m.-9 p.m. (http://www.netgsi.com/~mikesrs).

Free set of Tentel Gauges (a $1200.00 value) with the purchase of Sencore VC-93 VCR Analyzer, $995.00. Tektronix 465B 100 MHZ dual trace O'Scope, $650.00. Laser Power Meter, $85.00. Accept Visa, Mastercard, Discover. 303-475-1582.

TEST EQUIPMENT BOUGHT & SOLD: OSCILLOSCOPES, ETC. 925-706-0177. FAX: 925-706-0156. www.oscilloscopesetc.com

SERVICE TIPS for **FREE!!!** ******** That's right it's **FREE!! PROFESSIONAL BOARD LEVEL & COMPONENT LEVEL REPAIRS for TV's, VCR's, Projection TV's, CAMCORDER's, CD Players, Audio** and other repairs on computer disk. **ADD** your own repair tips. **PRINT** out repair tips. **BACKUP** & save **Your** repairs. Want to share your own repair tips? If you do, we will send you **FREE** Updates!!! Ask about our **TIP EXCHANGE** policy. For IBM compatible computers with a hard drive and some Apple Macs. **Get your FREE Stage 1 SERVICE TIPS PROGRAM Now!!! ***** FREE CALL — CALL NOW!!! CALL 1-800-215-5081. *****

* * * * * * **50,000*** * * * * * MULTIPLE SOLUTIONS FOR EACH SYMPTOM IN 1 CONCISE FORMAT has features no other tips program has. Covers more than 140 manufacturers on all types of consumer electronics. SERVICE TIPS THE ONLY NESDA APPROVED TECHNICAL TIPS PROGRAM **$199.95** (plus s & h).

*******ESD'S ALL NEW Computer Monitor SERVICE TIPS program over 8,000 tips on Computer Monitors*******Covers over 200 brands same easy simple format as our SERVICE TIPS program. All information at your fingertips. No need to be afraid to repair computer monitors any longer with our unique program. SPECIAL INTRODUCTORY PRICE $99.95 (plus s&h) **BOTH PROGRAMS WORK WITH WINDOWS 95, 98, & NT, AND ARE Y2K COMPLIANT. TO ORDER SERVICE TIPS or COMPUTER MONITOR TIPS CALL 1-800-621-8477**. Electronic Software Developers Inc., 826 S. Main St., Farmingdale, NY 11735 or e-mail us at esd@bccom.com or visit our web site at www.servicetips.com

VEHICLE MAGNETIC SIGNS (12" X 24") — Up to 3 lines of 1 color copy. Send $69.95/pair prepaid! AAamazing Electronics, OTB/ K-Mart Plaza, Rensselaer, NY 12144-3522.

Repair shop business Windows 95/98 software. $49.95 to Alan Weinberg, 1769 S. Citation Avenue, Tucson, AZ 85713.

NAP Tuner 340309. RCA Tuner TCHRIA or TCCRIA and more. Snowy picture? Will rebuild for $25.00, Free Shipping. **Tip Top TV & VCR**, 18441 Sherman Way, Reseda, CA 91335, 818-345-1974.

FOR SALE

TEST EQUIPMENT FOR SALE: REASONABLE PRICES SENCORE, TEKTRONIX, HP and MUCH MORE. View complete list at: http://www.astglobal.com or contact: **AST GLOBAL ELECTRONICS**. Voice: 888-216-7159; Fax 814-398-1176; e-mail: sales@astglobal.com

WinSTIPS! — over **114,000** current tips from over 500 shops! 380 brands. Consumer Electronics & Monitors. Deluxe Print. Group add/search any word. VCR Cross, Sams & Philips Ecg cross. One-button update Tips. Windows 95/98 **$149.95**.(CD or Web download), FREE Registerable Demo: **http://www.ServiceSoftware.com.** KD TV 514 3rd St., Aurora, IN 47001. TOLL FREE **1-888-KD-STIPS.** Dos version $99.95. All c/cards. Ken Hull C.E.T. **WinSERV** Service Management Software $299.95. Track invoices, Customers, multi-user. **ServiceTalk** professional email repair group $50/yr. 30 day free trial.

PRICE REDUCTION. Diehl Mark III $39, Diehl Mark V Horizontal circuit tester $159. Conductive coating for remote control keypads $9.99 ppd. **WEEC**, 2411 Nob Hill Road, Madison, WI 53713. 608-238-4629.

SENCORE TEST EQUIPMENT — Sencore model CR70 universal CRT induction analyzer, Sencore, model LC102 capacitor induction analyzer, Sencore model PR570 variable isolation powerlite II, Sencore model CM2125 computer monitor analyzer, Sencore model SC3100 w/auto tracker, auto 100Mhz waveform and circuit analyzer, will only sell all together, $7,500.00. William Johnson, 901-385-2100, 8 a.m. to 5 p.m. Monday through Friday.

BUSINESS OPPORTUNITIES

CENTRAL FLORIDA TV/ELECTRONICS Business/Building. Heart of the retirement area. 36 years (75K). Owner retiring. **941-385-0359.**

WANTED

WANTED:USED TEST EQUIPMENT. TURN IDLE OR EXCESS EQUIPMENT INTO CASH. AST GLOBAL ELECTRONICS. Voice: 888-216-7159; Fax 814-398-1176; e-mail: sales@astglobal.com.

Need a Technical Director of Operations. Job duties will be: Directs and coordinates overall activities of the Electronic equipment maintained, supplied, and repaired. This includes testing, servicing, and repairing Computer monitors, keyboards, power supply systems, compact disc players, televisions, digital laser disc video players, home theatre stereo systems, all types of Camcorders, microwaves and other audio electronic equipment, Provide on-site technical support for electronic equipment. Bachelor of Science degree with 2 years of experience in the same field a must. Salary $53,000.00 P.A. Apply at the Texas Workforce Commission, Orange, Texas, or send resume to the Texas Workforce Commission, 1117 Trinity, Room 424T, Austin, Texas 78701, J.O.#TX0520238 and "Ad Paid by An Equal Opportunity Employer."

READERS' EXCHANGE

Readers' Exchange is a free service.

The following restrictions apply to Readers' Exchange:

- Only individual readers may use Readers' Exchange, and items must be restricted to those that are ordinarily associated with consumer electronics as a business or hobby. If you're in business to sell the item(s) you want to offer for sale, the appropriate place for your message is in a paid advertisement, not Readers' Exchange.
- Readers' Exchange items must be restricted to no more than three items each for wanted and for sale.
- All submissions must be typed or printed clearly!

Send your Readers' Exchange submissions to:
Readers' Exchange, Electronic Servicing & Technology, 25 Newbridge Road, Hicksville, NY 11801

FOR SALE

Tektronix NTSC vectorscope model 1420 with manual. *Contact: Robert Snow, 6 Anglin Crescent, St. John, N.B. Canada E2K 3R3.*

Sweep generator, four crystals, and goes to 380 MHZ, $70.00. *Contact: Sidney, 510-357-3788.*

Heath IG-102 RF generator with manual and leads, $39.00. *Contact: Bob Kramer, 919 Grove St., Aurora, IL 60505, 630-898-8946.*

Sencore SC61 waveform analyzer (2). $500.00 each or best offer. Sencore VA62 video analyzer with manuals, probes, $700.00 or best offer. *Contact: Steve, 508-831-9951 or e-mail wawawatt@aol.com*

Channel master broad band VHF distribution amplifier #7030. Electronic voice TV booster. Sams Photofact. *Contact: Ann Bichanich, 15 W. Lake St., Chisholm, MN 55719.*

Sencore VC93 analyzer, $1500.00, hardly used, includes all accessories. Sencore PR570 variable isolation/safety analyzer, $500.00. *Contact: Larry Ward, 419-352-4999 or 419-250-4686.*

Heathkit & Paco capacitor checkers. $25.00. Sams Photofact #1095–1366, $75.00. Heathkit digital multimeter, model IM-2215 with manual, $40.00. H.V. triplers ECG 500A, 501B, 522. 532, $10.00 each. Realistic am/fm stereo model STA 2100 power transformer, $20.00. Thordason TV yokes, Y115, Y117, Y167, Y225, $15.00 each. Shipping not included. *Contact: John Brouzakis, 247 Valley Circle, Charleroi, PA 15022, phone: 724-483-3072.*

Function generator with manual, $60.00. Mac SE-30 computer, $60.00. *Contact: Sidney, 510-357-3788.*

B&K 545 circuit analyzer, new condition, $1750.00. *Contact: Kim, 612-869-4963.*

Zenith flyback 095-04376-02, $30.00 plus shipping. *Contact: Elmer Wieland, 237 Talbot Drive, Bedford, OH 44146, 440-232-8653.*

Sams Photofact 345-2000, $99.00. Original factory VCRs, TVs, service manuals, many models. *Contact: Patrick Willie, 520-871-2139.*

Sencore VA62 w/VC63+ and HP200, $500.00. All probes, manuals, schematics, original boxes, excellent condition. *Contact: Frank, 727-392-0230.*

Conar Model 230 signal tracer, $25.00. Simpson (380M) microwave leakage tester, $45.00. Stancor 1000W isolation xformer, $40.00. Heath vector scope, $85.00. HP pulse generator 8003A, $50.00. Other Heath training courses. *Contact: Leonard Duschenchuk, 561-871-5831.*

Heathkit IG 5282 audio generator, IT 5283 signal tracer, Albia Electronics 550MHz frequency counter, Sentinel FL-3D-1 wow/flutter meter. Best offer plus shipping. *Contact: Sheldon Fingerman, 970-925-4639 or e-mail sheldon@sopris.net.*

Pace solder/desolder station, Tribal Microsystems TPT-100 handy tester and assorted NTE/ECG components, $550.00 or best offer. *Contact: Paul, 860-632-5577.*

Zenith modules 9-1053R main, new, $60.00, 9-1074 horizontal sweep, new, $60.00. *Contact: Judge Williams, 2000 N.W. 191 St., Opa Locka, FL 33056-2735, 305-621-4311, 305-276-8294 (beeper).*

Sams Photofacts, Auto Radio AR #19 to AR #86, Short #24, #26, #31, #32 and AR #110, #125, #133 and #187, all for $25.00 plus shipping. *Contact: Wallace Huffman, 2579E 550N, Warsaw, IN 46580-7183 or call 219-453-4811.*

WANTED

NEC color monitor (composit) #CM1991A service manual, copy o.k. *Contact: Don, 601-982-9489.*

Marantz 2238B volume potentiometer. *Contact: Dan Snelling, 970-848-2346 after 5 p.m.*

Hickok or Precise 111M tube tester and audio tubes, 2A3, 12AX7, KT-66, KT-88, etc. *Contact: Kim Gutzke, 612-869-4963.*

BK Precision Model 480 video display tester w/adapters, good condition. *Contact: Walter, EZ TV Repair, 19967 Monte Vista St., Detroit, MI 48221, 313-861-2451.*

Magnavox chassis #31C6-01 needed flyback transformer part #483514887187. *Contact: Harold Clark, 703 St. Rd. 114E, N. Manchester, IN 46962. Phone/Fax 219-982-7239, e-mail clarkvideo@ctl-net.com.*

MITS calculator as featured in the November 1971 issue of Popular Electronics magazine. Will settle for kit or assembly manual. Canon calculator Model 161 schematic/operations manual. 60's vintage. *Contact: Donald Dupre, 401-737-7118, 401-886-3910 or e-mail dgd@cherry-semi.com*

Coming next month

The August issue promises to be chock full of useful information for consumer electronics technicians

For starters, there will be the article "Service aids." Products and circuits are getting so small that it becomes increasingly difficult to service them without an array of extra little hands and eyes to help. For example, seeing circuit traces and surface mount components is difficult, if not impossible, without local lighting and some form of magnification. And how *do* you get your DMM/oscilloscope probe on those tiny IC pins? Besides that, technicians need devices that can hold, clasp, and otherwise keep things in place. This article will describe those kinds of aids that can help a technician turn an otherwise impossible service task into a breeze.

Another article, "Troubleshooting techniques," will give some pointers on logical troubleshooting. Some technicians just seem to know how to proceed in the most straightforward and efficient manner from an evaluation of the nature of the problem symptom to a resolution of the problem. This article will give some tips on how one, or more, top techs do it.

Another helpful feature in August will be Replacement Parts Showcase. The replacement parts advertisers in this issue, who advertise a half page or more, will be given an equivalent amount of space to give readers some details about their companies, policies, and methods of doing business. This information will help readers decide with whom to deal.

ADVERTISERS' INDEX

We'd like to see your company listed here too. Call Evelyn Garrison at 425-557-9611 or Fax her at 425-557-9612 to work out an advertising program tailored to suit your needs.

ES&T BOOK SHOP

ES&T Presents Computer Troubleshooting & Repair
Features information on repairing Macintosh computers, a CD-ROM primer, and a color monitor. Also included are hard drive repair tips and computer diagnostic software.
61087 • $24.95

Computer Monitor Troubleshooting & Repair
Learn the basics of computer monitors with chapters on tools and test equipment, monitor types, special procedures, how to find a problem, and how to repair faults in the CRT.
61100 • $34.95

1999 Computer Monitor Troubleshooting Tips
Includes over 2,000 troubleshooting and repair tips listed by manufacturers name and model number featuring such major names as Apple, Gateway, Compaq, IBM, and Dell.
CD-ROM Included
61179 • $49.95

ES&T Presents the Test Equipment Guide
Includes the latest information on how to choose the best equipment, how to build test equipment and accessories, how to set up the ideal service bench, and how to put together a practical tool kit.
61089 • $24.95

Complete VCR Troubleshooting & Repair
In addition to trouble-shooting procedures, this book contains nine detailed VCR case studies, each focusing on a particular model of VCR with a very specific and common problem.
61102 • $34.95

Semiconductor Cross Reference, 4th Edition
With more than 490,000 part numbers, type numbers, and other identifying numbers listed, technicians will have no problem locating the replacement or substitution information needed.
61080 • $29.95
Also available on CD-ROM,
61140 • $29.95

ES&T Presents TV Troubleshooting & Repair
Presents important and new information that will make it possible for technicians, students, and electronics hobbyists to service TVs faster, more efficiently, and more economically.
61086 • $24.95

Complete Projection TV Troubleshooting & Repair
Covers everything from the basics of projection circuits, tools and test equipment, TV types, safety procedures and measurements, to the finely detailed repair techniques.
61134 • $34.95

Troubleshooting & Repair Guide to TV, Second Edition
The most comprehensive, complete, and up-to-date television repair book available, with tips on how to troubleshoot the newest circuits in today's TVs.
61146 • $34.95

ES&T Presents VCR Troubleshooting & Repair
This book provides in-depth and thorough information on a variety of VCR troubleshooting and repair areas.
61158 • $24.95

Howard W. Sams Servicing Series RCA/GE Televisions
From RCA component numbering systems to the infamous "tuner wrap" problem, this book gives you all you need to make more efficient repairs.
61171 • $34.95

Power Supply Troubleshooting & Repair
Designed to provide technicians with a better understanding of how switched-mode power supplies operate. It also provides practical, useful procedures to follow when troubleshooting power supplies.
61138 • $24.95

YES! I want to learn from the experts. Rush me my book(s) right away!
Please add $4 shipping & handling. **FREE shipping & handling for orders $50 and over.**
Please make your check or money order payable to: Electronic Servicing & Technology
U.S. and possessions - add $4 shipping/handling. FREE S/H on orders $50 and over. Foreign - shipping/handling charges are calculated by order weight & destination. A $4 credit will be applied for Foreign orders over $50.

To Order Call
800-853-9797

Qty	Order#	Description	Price	Total Price
			Shipping/Handling	
		New York Residents add applicable sales tax	Total	

Name _____
Address _____
City _____ State _____ Zip _____
MC/VISA/AMEX/Discover # _____ Expires _____
Form of payment: ☐ MC ☐ VISA ☐ AMEX ☐ Discover ☐ Check ☐ Money Order

Please mail your orders to: Electronic Servicing & Technology, 25 Newbridge Rd., Hicksville, NY 11801-9962 FAX: 516-681-2926