TUNING CIRCUIT TROUBLES

ALIGNMENT

39RH-1

NATIONAL RADIO INSTITUTE
ESTABLISHED 1914
WASHINGTON, D. C.

PIONEER HOME STUDY RADIO SCHOOL

STUDY SCHEDULE NO. 39

For each study step, read the assigned pages first at your usual speed, then reread slowly one or more times. Finish with one quick reading to fix the important facts firmly in your mind. Study each other step in this same way.

☐ **1. Tuning Circuit Troubles.....Pages 1-9**

Usually, alignment is all that is needed when tuning circuits cause trouble. However, sometimes other troubles may occur, such as shorted coil turns, excessive leakage or increased series resistance. These cause troubles which can be localized by the usual effect-to-cause reasoning or stage elimination procedures. You can then find whether the tuning circuit is at fault by noting whether the trimmer tunes broadly, whether a readjustment produces better results or whether it is impossible to reach a peak. All these clues point to definite tuning circuit conditions.

☐ **2. Preliminary Considerations for Superheterodyne Alignment.....Pages 9-16**

Before starting to align a receiver, you must locate the trimmers, have the necessary equipment and properly set the receiver dial and controls. This section explains these preliminary steps in detail.

☐ **3. Methods of Alignment.....Pages 16-23**

The method to follow depends on whether the receiver is just being "trimmed" for better results, or whether it is badly out of alignment, due to tampering. Also, different procedures are followed for the different types of all-wave receivers. Learn the basic alignment procedures "backwards and forwards"—you can then go on to all-wave sets and unusual cases with confidence. Remember, some practice will be necessary before these operations become "second nature" to you.

☐ **4. Special Alignment Cases.....Pages 23-28**

Here are details on special jobs, such as F. M. receivers, receivers using regeneration, T. R. F. sets and variable selectivity receivers. You can always refer to these instructions when in doubt as to the proper method to use. The rules are simple, though, so you will find practice soon fixes them in your mind.

☐ **5. Answer Lesson Questions and Mail Your Answers to N. R. I.**

☐ **6. Start Studying the Next Lesson.**

COPYRIGHT 1943 BY NATIONAL RADIO INSTITUTE, WASHINGTON, D. C.

JD8M948 1948 Edition Printed in U.S.A.

TUNING CIRCUIT TROUBLES

ALIGNMENT

Tuning Circuit Troubles

IN THIS lesson you will learn how the professional serviceman gives quick, accurate service for another class of receiver troubles, those connected with defects or misalignment of the tuning circuits. You have already learned the professional methods of finding a defective part in the supply circuits of a receiver. These methods might be called the "groundwork" of radio servicing, which gives you a basis for your career as a serviceman. Now we are going to take you a big step further, with the ability to handle tuning circuit troubles and alignment. The man who can work with the same speed and accuracy on any receiver brought in for service and is not limited just to simple types of receiver breakdowns is in a special class, far above the average "repairman" in profits and in professional standing.

▶ With tuning circuit troubles, effect-to-cause reasoning is of the greatest importance and will save the serviceman large amounts of his most precious commodity—time. The actual defect may be an open circuit, short circuit, increased series resistance, change in coil Q, etc., but these troubles are unique in that the manner in which the receiver reacts, when tuned or when alignment adjustments are made, often serves to localize the trouble.

We will show first how to apply this principle to complaints associated with the tuning circuits—weak reception, poor selectivity, dead spots and station interference. Then we will cover alignment procedures fully, and you will learn just how to restore maximum sensitivity and selectivity to a receiver.

WEAK RECEPTION

When the customer says "weak reception," he means either low volume or poor sensitivity. If both local and distant stations are weak, the audio stages are likely at fault. If distant stations only are missing, or if they come in at the wrong points on the dial, the r.f. section contains the defect, so we will deal only with poor sensitivity here.

▶ Question the customer carefully. If the trouble came suddenly, it is probably a supply circuit failure, whereas a gradual loss of pep is more often in the tuning circuits or in alignment. The stage and parts isolation techniques you have already learned should generally be applied first, to make sure the trouble is not caused by a defect in a tube or supply circuit.

Alignment may be off in one stage or in several. With all stages slightly out of line, the over-all sensitivity will be low, but individual stages may be close enough to normal to give misleading results when using a signal tracer. Such slight misalignment may occur from aging of the trimmers,

destroying their springiness so their plates change position.

A slight shift of all trimmers in the same direction would merely cause a change in the dial reading of station reception; a 1400-kc. station would come in at 1420 kc., say. However, it is more likely that one stage will be off in one direction and another stage in the other direction. Then, when the set is tuned, each stage reduces the signal. Tuning for better response in one transformer reduces it in the other, so that the total effect is one of weak response with broader tuning than normal.

▶ How can we make a quick test to determine whether or not weak reception is due to misalignment? Move a suspected trimmer adjuster slightly in one direction and then in the other; any signal *increase* when a trimmer is moved slightly indicates misalignment. If only decreases are found, alignment is probably not at fault and the trimmer should be restored to its original setting.

Don't blindly "play" with the trimmers on a set. Complete alignment may be necessary in any case if you move the trimmers any great amount in making tests.

▶ Weak reception naturally results when the oscillator frequency shifts, because it is necessary to tune the receiver dial to a different point than that where the preselector was aligned, so the preselector cuts down the signals by being tuned off-resonance. Another clue to this is the fact that stations come in at the wrong dial points. Also, there would be an unusual amount of noise, because the preselector fails to pass enough signal to over-ride the converter noise.

▶ Weak reception can be caused in the tuning circuits not only by misalignment, but by defects which lower the Q. Corroded connections, introducing resistance in the tuned circuit, leakage paths across the coil or condenser, or moisture absorbed by the coil will all lower the Q and reduce the step-up of the tuned circuit. A careful check of the trimmer adjustments will help in finding a low Q circuit. A tuned circuit with proper Q will come to a sharp peak as the trimmer is adjusted. If the trimmer has very little effect on the signal, with broad adjustment—no sharp resonant point—look for the defects which lower Q.

Considerable experience with radio receivers will be necessary before you can judge the normal sharpness of adjustment of a tuned circuit. A preselector circuit, for example, is rather broad anyway. In other cases, the design of the receiver may be such that it is intended to have much sharper tuning than you at first expect, so you might overlook the fact that the set tunes more broadly than it should. Be sure to note the results of your first alignment jobs carefully, so you can develop the ability to judge whether or not you are getting a normal trimmer adjustment.

▶ When a trimmer adjusts properly, it should be possible to pass through a point of maximum response. In other words, as you adjust the trimmer you reach a maximum, and further turning in the same direction causes response to fall off again.

Should you notice that as you turn the trimmer in or out, the volume steadily rises but you never reach or pass through a maximum peak, there is something wrong with the condenser or coil in the tuned circuit or the wrong frequency is being used.

▶ From the foregoing, you can see that weak reception, if combined with loss of the distant stations or misplacement of stations on the dial or a lack of proper peaking of the

trimmers, points to a tuning circuit trouble. Usually, if the alignment seems to be fairly good and the trimmers show a reasonably good peak, the trouble is not in the tuning circuit.

DEAD SPOTS IN A RECEPTION BAND

There are three cases where dead spots may occur. In all instances of dead spots, you have an r.f. trouble. However, sometimes the tuning circuits are not at fault.

Case 1. In this case there is no signal received at all, except for one *low-frequency* station. Usually this one station comes in over the entire low-frequency end of the band.

This invariably means that the oscillator in a superheterodyne receiver has stopped operating. Without oscillator voltage, the first detector may become an amplifier, and with the help of the preselector may force a low-frequency station through the i.f. amplifier. Such single-station reception means we must restore operation to the oscillator stage.

Case 2. In the next case, signals are picked up either at the low-frequency or the high-frequency end of the dial, but not at both ends.

When signals are received only at the low-frequency end of the dial and at approximately their normal position, this usually means that the oscillator stops at the high-frequency end. However, it is possible that the oscillator may be misaligned so that it tracks with the preselector only at the low-frequency end of a band.

If signals are received only at the *high*-frequency end of the dial, the tuning condenser gang may be short-circuited at the low-frequency end by a bent plate or dust and metal particles between the plates. If you do not find any rotor plates which appear to be touching a stator plate, particularly if no unusual noises are heard as the gang condenser is rotated, the oscillator may be stopping or again we may have a case of misalignment. Measure for a voltage across the oscillator grid resistor, if one is used. Lack of voltage over the portion of the dial where no signals are received indicates that the oscillator stops on that section of the dial.

Oscillator Troubles. The cure for various oscillator troubles depends on the type of circuit in use. Fig. *1* shows a typical circuit using a pentode tube as a combination mixer-oscillator. When the tube ages it may fail to oscillate at the low-frequency end of the band. Replacing the tube may be only a temporary cure, as these circuits are sometimes designed for selected tubes. In such cases, reduce the value of the oscillator bias resistor R_1 by about one-third of its original value. Thus, if the resistor was originally 9000 ohms, replace it with a 6000-ohm resistor.

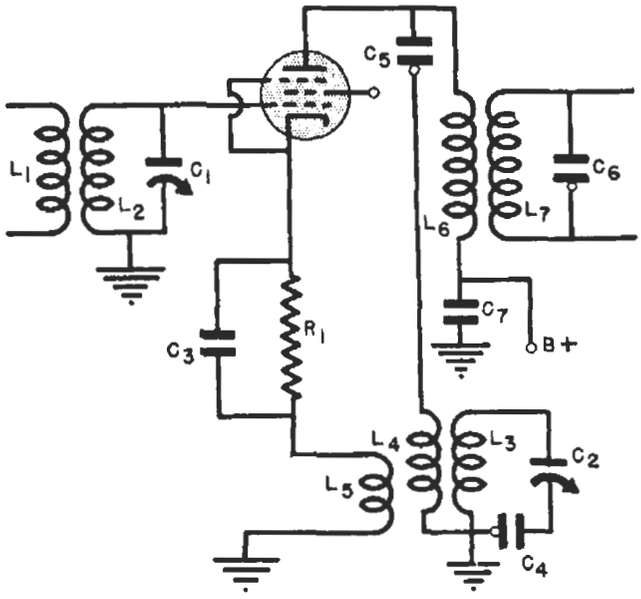

FIG. 1. A typical pentode type mixer-oscillator stage.

By-pass condenser C_3 may cause trouble and should be replaced if a smaller resistor does not help.

High-resistance connections in the tank circuit L_3-C_2-C_4 could also cause this trouble so go over each joint in the circuit with a hot soldering iron. Electrical connections are usually made to the stator of the tuning condenser through the bolts holding the

stator in place. Corrosion between the threads of the bolts and the stator assembly may form a high-resistance joint. Usually, simply loosening and tightening these bolts one at a time is enough to remove the corrosion and the resistance.

If oscillation stops at the high-frequency end of the dial, the trouble is generally increased r.f. resistance in the tank circuit, lowering the coil Q. Moisture absorption by the oscillator coil form is to be suspected. Either replace the oscillator coil or remove it and dry it out in an oven. After baking, the coil should be dipped in melted paraffin to prevent further trouble of this kind. Cracked mica in i.f. trimmer C_5 or low-frequency padder C_4 will also cause this oscillator trouble.

▶ A typical pentagrid-converter tube circuit is shown in Fig. *2*. If this circuit refuses to oscillate at the low-frequency end of the dial, the trouble may be due to high-

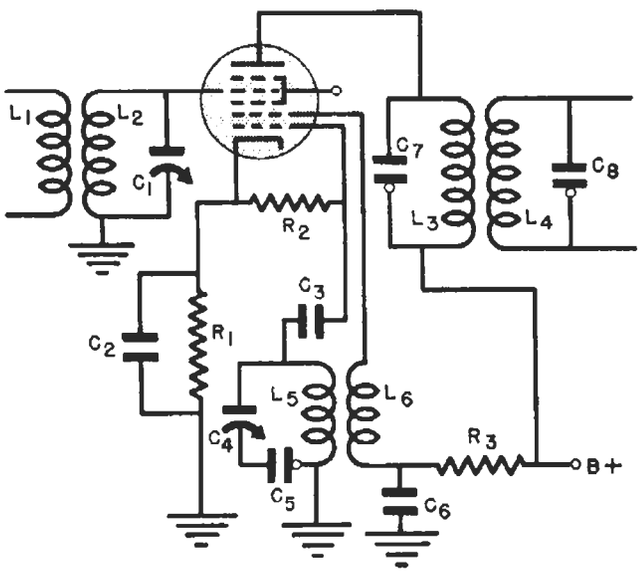

FIG. 2. The standard pentagrid converter, functioning as a mixer-oscillator.

resistance joints in the tuned circuit. If an extra peppy tube is required to maintain oscillation, the ability of the oscillator to perform may be improved by *increasing* the value of the oscillator grid resistor R_2. Generally, a value between 50,000 and 75,000 ohms should be used with 6.3-volt tubes; too large a resistor will cause blocking of the oscillator.

Where battery pentagrid-converter tubes are used, oscillator failure can often be traced to lowered filament voltage. The circuit-disturbance test will indicate that the mixer section is alive but the oscillator simply will not function. The remedy is to replace the A battery or to use a more peppy tube. In the case of the 1.4-volt types particularly, the value of the grid resistor R_2 may have to be increased up to as high as 275,000 ohms.

Case 3. In this case signals are received at *both* ends of the dial, but not satisfactorily in the middle. This is a rather interesting case of misalignment.

Curve *1* in Fig. *3* represents the *preselector alignment* of a typical receiver. As the dial of the receiver is changed from 0 to 100, the band from 1500 to 500 kilocycles is covered.

If the i.f. is 260 kilocycles, the proper oscillator tracking is shown by curve *2*. The oscillator range must be from 1760 to 760 kc., in order to receive all frequencies in the band. Curves *1* and *2* are exactly parallel, having the same spacing (260 kc.) between them at all points.

In many receivers, the adjustable range of the high-frequency trimmer is so great that it is possible to switch the oscillator frequency *below* the incoming frequency instead of *above* it, particularly in the older receivers having low intermediate frequencies such as 175 kc. or 260 kc. (In receivers having higher i.f. values, this trouble will normally be encountered only on the short-wave bands.)

Naturally the i.f. value will be produced whether the oscillator is above or below the incoming frequency, so long as the difference is equal to the i.f. Therefore, if we adjust the oscillator to produce 1240 kc., a 1500-kc. signal can be received, as a 260-kc. i.f. is produced. If the oscillator now ranged from 1240 kc. to 240 kc., the difference between the oscillator frequency and the incoming signal would again produce the i.f. signal at all points on the dial. Again

we would have a curve parallel to curve *1*, but underneath it.

However, the usual oscillator circuit will not work this way, as the tuning circuit values force it to be *above* the incoming frequency at the low-frequency end of the band, even though it is *below* the signal at the high-frequency end. (The only time this will not be true is when the oscillator is specially designed, as in certain ultra - high - frequency wave bands.)

Thus, if you have an improperly adjusted trimmer, putting the oscillator *below* the signal at the high end of the dial, the frequency of the oscillator will usually range as shown in curve *3* of Fig. *3*—it will "cross over" to be *above* the signal at the other end of the dial, so this condition is called "cross-over."

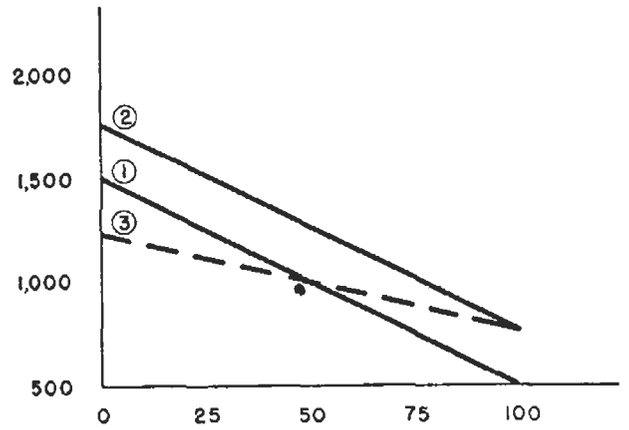

FIG. 3. Curves showing how cross-over produces improper tracking.

With this condition, stations at the high-frequency end of the dial will be received, and so will stations near the low-frequency end of the dial, because in both instances the oscillator frequency is such that the desired i.f. can be produced. However, at the center of the band, the oscillator frequency approaches and may even be the same value as the preselector alignment. As a result, we would have to tune away from the correct dial position, to produce the i.f. This detunes the preselector so stations in the middle of the band will be attenuated to such an extent that they will not be received.

▶ The way to avoid cross-over, when aligning the standard receiver, is to be sure that the oscillator frequency is *above* the incoming frequency. When aligning the oscillator, rotate the high-frequency oscillator trimmer throughout its range. If you find that there are two oscillator trimmer positions which give a maximum output, choose the trimmer position which has lower capacity (plates more open) and the oscillator will be *above* the incoming signal.

POOR SELECTIVITY

In general, *poor selectivity* means that when attempting to pick up one station, another station 10 or 20 kc. away is heard at the same time.

▶ Poor selectivity is common in t.r.f. receivers. Here, a check of the alignment is desirable. In addition, check for missing shields since this will frequently permit some circuit nearer the detector to pick up an undesired signal in such a way that it does not have to pass through the tuning circuits.

▶ With superheterodyne type receivers, broad tuning is not a common complaint. However, certain design conditions may produce the symptoms of poor selectivity.

The automatic volume control circuit will affect the broadness of response of a receiver. When you tune in a local station exactly, the a.v.c. voltage reduces the sensitivity of the i.f. amplifier a great amount. As you tune away from the proper dial position, however, the reduction in signal strength also reduces the a.v.c. voltage and increases sensitivity so that the receiver tends to "hold" the strong signal past its true dial position. In fact, the local station may

be held to such a point that the signal sounds distorted due to side-band cutting in the tuned circuits. Any other stations which are tuned within the "holding" range will suffer interference. However, the local station will not be interfered with itself, because the a.v.c. reduction in sensitivity will discriminate against weaker stations on the same frequency as the local.

▶ As another instance of design affecting selectivity, consider the high-fidelity receiver. In this type, the i.f. amplifier is band-passed to give a broad response. The selectivity curve is not sharp but instead has a broad top with fairly steep sides, which is very necessary for high fidelity. However, you will frequently encounter owners of receivers of this type who complain of the lack of selectivity.

In these cases selectivity can be improved only at the expense of fidelity, unless it is possible to make use of wave traps or other similar devices, or to change the antenna. Surprisingly, you will find that sometimes a smaller antenna, and other times a larger antenna may be necessary. With the larger antenna, usually the stronger stations will develop more a.v.c. voltage, which will tend to lower the sensitivity of the receiver to a point where perhaps the interfering stations will not be picked up. On the other hand, sometimes a smaller antenna will discriminate against the interfering stations, particularly when it is erected in such a direction that the desired stations are favored.

▶ Should the i.f. amplifier of a receiver be out of alignment, the selectivity of the receiver may be broadened. When this occurs, we have a real case of poor selectivity which alignment can correct. Unless you are familiar with the characteristics of the particular receiver, you may find it impossible to determine whether the condition is due to the design of the set or to misalignment. In such a case, try realigning the receiver to note whether this makes any improvement. Improper alignment will cause some loss of sensitivity, so the characteristics of a set with poor selectivity because of misalignment would be: *Strong local stations spread over the dial without a great amount of distortion; local stations blank out distant stations; distant stations are weak.*

▶ Lack of selectivity can be produced by lowered Q also, produced by such circuit defects as moisture and dirt in coils or in condenser wiping contacts, all of which will lower the circuit Q and the selectivity. If a stage is overloaded, the positive signal peaks cause a grid current flow and make a conductive path between the grid and cathode, which places a fairly low resistance across the grid resonant circuit, thus lowering Q.

▶ As you can see, poor selectivity may be due to circuit defects, to misalignment or to the design of the receiver. Localizing the trouble to one stage by using a signal tracer or signal generator, then testing selectivity and gain by shifting trimmer settings will prove whether alignment or a circuit defect is the trouble.

INTERFERENCE

Station Interference. There are two kinds of station interference. In one case the interfering station is on the *same* frequency as the desired station, and in the other case the interfering station is on a frequency more than 40 or 50 kc. away from the desired frequency.

▶ When the interfering station is on exactly the same frequency as the desired one, the receiver's tuning circuits cannot possibly separate the two and there is nothing to do but try

different antenna systems. We must either increase the strength of the desired signal so that the a.v.c. can lower the sensitivity of the set enough to cause the interfering station to drop out, or we must erect an antenna system which will discriminate against the unwanted station.

▶ In the other case, where a strong local station causes interference over 40 or 50 kc. on the dial, the local signal is usually getting into the receiver without passing through the tuned circuits. Absence of shielding may permit this signal to get directly into the second detector, or it may come in over the power line and be radiated to some signal circuit.

In these cases, by-passing the power line, installing proper shielding, and sometimes using a wave trap in the antenna circuit to reduce the amount of energy from the interfering station will usually eliminate the trouble. Under ordinary circumstances, this is not a condition which alignment will help at all. Remember, the tuned circuits provide selectivity only because they are resonant to a particular frequency to which they happen to be tuned at the moment. If a station quite far removed from that frequency is so powerful that it can force its way through, or can get into the circuit at some point other than through the normal paths, the tuned circuits cannot be considered at fault.

I.F. Interference. The usual superheterodyne receiver will have an i.f. somewhere in the 175 to 465-kc. range. Any local commercial or government station that happens to have a frequency the same as the i.f. value may force its way through the preselector and then be amplified by the i.f. stages to give interference. You can recognize this condition usually by the fact that this interfering station is heard over a wide range of the station dial, particularly at the low-frequency end, since at these positions the preselector is less effective in its rejection. More important, the signal will be code or a type of message quite distinct from a broadcast signal.

The offending station need not be at the i.f. value—it may be at some subharmonic and still interfere. If the i.f. is 460, a 230-kc. station can produce in the r.f. stage or first detector a second harmonic of 460 kc. which causes interference.

Since the interfering code station is on the i.f. or is some sub value of this frequency, we might at once believe that the cure is to shift the i.f. value of the set somewhat. Where it is possible to do this, all we need to do is tune the i.f. 5 or 10 kc. away from the interference and it will be entirely cleared up.

If the receiver design does not permit an i.f. shift without upsetting the dial tracking, it may be necessary to add shielding to any exposed coils or tubes to eliminate any direct pickup from the interfering station. Sometimes, r.f. filters in the power line will prove helpful.

▶ However, before doing this, examine the set or diagram carefully. Many receivers have built-in i.f. wave traps in the antenna circuit which are tuned to the i.f. and will usually block any signal of that frequency out of the receiver.

If the set has no i.f. trap, one can frequently be added. The proper type will depend on the type of receiver. A parallel-resonant circuit may not be effective in the antenna lead if the receiver input circuit is of high impedance, while a series-resonant circuit shunted across the receiver antenna and ground posts will not be effective if the receiver has a low input impedance. Try both types of traps to see which works better.

Image Interference. A signal frequency *above* the oscillator frequency by the i.f. value will cause interference, if it can get through the preselector. We assume the station having a frequency *below* the oscillator frequency by the i.f. value is the desired station and is tuned in by the preselector. Since the undesired signal is of the proper frequency to produce an i.f. signal, it is called the "image signal."

The existence of image interference depends on the selectivity of the preselector and on the i.f. value. The lower the i.f. value, the greater should the preselector selectivity be, because a low i.f. puts the image signal closer in frequency to the desired signal. High i.f. values of about 460 kc. permit less-selective preselectors, for now when the receiver is set to, let us say 600 kc., the image signal for a 460-kc. i.f. system will be 600 + 460 + 460 = 1520 kc.; even a single-tuned-circuit preselector can separate frequencies so far apart.

Usually image interference occurs when a weak station is tuned in and a strong local is at the image frequency. Under these conditions, the a.v.c. voltage is low and the stages are running almost "wide open" (high gain).

You can recognize the trouble as image interference if you can recognize the program on the interfering station as coming from a station which is twice the i.f. *above* a desired station frequency.

▶ If a single station comes in at two points on the dial, one correct and the other an image point, without causing interference, the action is called double-spot tuning. Often no action is taken to correct this, as long as no interference results.

▶ There are two usual remedies for images which do cause interference. Where one local is giving trouble, a wave trap will usually reduce its penetration sufficiently to eliminate image interference. You may also shift the i.f. value so the image signal will come in at a dial position where it will not be objectionable. Complete alignment of the i.f. and preselector stages is important, and any defect that reduces stage selectivity should be eliminated.

Oscillator Harmonic Interference. We have so far assumed that the oscillator generates only one signal at a time. You realize, of course, that the average receiver oscillator will produce a series of harmonics which can combine with some local high-frequency station to give interference.

For example, the receiver is tuned to 1200 kc.; the i.f. is 460 kc. The fundamental oscillator frequency is 460 + 1200 = 1660 kc. Its second harmonic is 3320 kc. A station 460 kc. above or below 3320 kc. can produce the intermediate frequency. A government station in your locality may operate on one of these frequencies with sufficient strength to penetrate the preselector, giving squeals and station interference. Also, this explains why police calls are sometimes received on the broadcast band. Should these signals interfere with desired stations, a shift of the i.f., or the use of a wave trap tuned to the offender are the usual remedies.

Intermodulation Interference. This interference usually occurs in localities where many high-powered broadcasters exist. Let us say we have this combination of conditions—the i.f. is 260, two local stations exist, one of 1000 kc., the other 1260 kc. Both signals are strong enough to penetrate the preselector. Once they get to the first detector, they will combine to produce a signal at 260 kc. which rides through the i.f. stages. You will

hear garbled programs over a wide tuning range, being strongest in the 1000 to 1260-kc. tuning range.

If you suspect this trouble, eliminate temporarily the oscillator action (short oscillator tuning condenser, or pull out tube if separate). If the interference continues, you have intermodulation interference. The logical solution is to change the i.f. value.

Cross-talk. When a strong local station rides in with one or more of the other desired stations—sometimes with all of them—and is not at a frequency which can produce intermodulation or image interference, the condition is called "cross-talk" or "cross-modulation."

Cross-talk occurs because something in or near the radio is acting as a rectifier. If the receiver is close to a powerful local station, it is possible for this cross-modulation to occur in the receiver itself, by overloading one of the stages. A wave trap will usually eliminate this kind of cross-talk.

▶ In other instances, this cross-modulation is occurring outside the receiver, for instance in a poor or corroded contact somewhere in the antenna system. Such a contact may conduct current better in one direction than in the other, forming a rectifier.

To check for this, disconnect the antenna entirely and move its lead-in well away from the receiver. Try a short indoor antenna to see if you can pick up the desired station without cross-modulation. If so, go over the entire antenna installation carefully. Be particularly suspicious of window lead-in strips which use bronze or steel clips for connecting to the copper lead-in wire. This junction of dissimilar metals is a frequent cause of trouble. Eliminate the strip entirely as a test for this condition, by connecting the two ends of the lead-in wire together directly.

You may find that the plumbing or heating system of the house will pick up radio energy and will rectify this energy due to poor joints in the system. This energy will then be radiated from the pipes and will be picked up by the receiver. One clue to this condition will be the fact that moving the radio to your shop will apparently clear up the trouble, while it recurs as soon as the receiver is brought back to its original location. Try moving the receiver to another part of the room, as this is often an effective way of clearing up the trouble.

Preliminary Considerations for Superheterodyne Alignment

A receiver may be out of alignment because of aging of parts, from the effect of heating and cooling, which causes expansions and contractions, or you may have upset the alignment in your search for a tuning circuit defect. Regardless of the reason, alignment must be properly performed to restore a radio to the maximum pep and selectivity of which it is capable.

We have given you so far in this lesson the methods the advanced serviceman uses to recognize and locate tuning circuit defects, and to uncover a case of misalignment. You are now going to study alignment itself—how to prepare the receiver for it, and then exactly how to do it.

OSCILLATOR TYPES

All sections of a receiver determine to some extent the location of a station frequency on the station dial, but the oscillator has far more influence than any other circuit. Each receiver is designed so that when the oscillator is properly adjusted, the stations are received at the proper points on the dial scale, and all the tuning circuits work effectively together.

Dial tracking depends on the design of the oscillator circuit, as you learned in other lessons. Here is a brief review of the basic circuits.

Type 1. The most used tracking method uses a padding condenser in series with the oscillator tuning condenser. The padding condenser reduces the tuning capacity in the oscillator circuit so that it will tune to higher frequencies than will the preselector.

This type of oscillator circuit requires two adjustments, one at each end of the band, to get proper tracking over the entire band. A trimmer condenser, in parallel with the main tuning condenser, is adjusted at the high-frequency end of the band. Then the padding condenser is adjusted at the low-frequency end of the band.

Type 2. This circuit makes use of a tuning condenser having specially cut rotor plates for the oscillator. These plates are cut so that they are smaller physically than are the other tuning condenser sections, so there is less capacity in the oscillator tuning condenser. It will therefore be automatically tuned to higher frequencies than the other sections.

A trimmer condenser is used for high-frequency adjustment. However, tracking over the entire frequency range is now dependent upon the proper design of the tuning condenser, the oscillator and preselector coils, and the choice of the proper intermediate frequency. There is no padding condenser with this type of oscillator.

Type 3. The third type is used in short-wave bands in many all-wave receivers. A carefully selected fixed condenser is used as the padder for these particular short-wave bands. The only adjustment which is made is at the high-frequency end of the band. The tracking at the low end of such a band is then dependent upon the accuracy with which the padding condenser was chosen, its ability to maintain its originally chosen value, and the use of the proper i.f.

Type 4. Sometimes the oscillator coil will have a movable powdered-iron core so that its inductance can be changed. If variable tuning condensers are used, the coil inductance is adjusted for proper tracking at the low-frequency end of the dial. This type may be found with specially cut oscillator tuning condensers or with fixed padders. In either case, this moving core is the low-frequency adjustment. (This is one case where there will be a low-frequency adjustment even with specially cut oscillator plates.)

Type 5. Many modern receivers do not use tuning condensers. Instead, fixed condensers are used, while the preselector and oscillator coil inductances are varied by the tuning mechanism. In these cases, the coil inductance is adjusted at the high-frequency end of the band. Adjustments are made by moving the coil with respect to the core, or the cores can be individually adjusted with respect to the tuning mechanism. In a few cases, high-frequency trimmers may be found. If so, these are usually adjusted at the extreme high-frequency end of the band, then the coils are adjusted at a somewhat lower frequency (still near the high-frequency end,

however). No low-frequency adjustment is usually provided on these sets.

IDENTIFYING TRIMMERS

If at all possible, obtain and follow the instructions of the manufacturer of the receiver you are to align. This is particularly true when you are just beginning your service career, or the receiver is a complicated type.

After you have gained experience, you will know the basic alignment procedure to follow, but you will still find the manufacturer's instructions very helpful. In particular, you should try to get information giving the position of the trimmers for the various adjustments and wave bands. In addition, the manufacturer's instructions usually give the intermediate frequency and the order in which the adjustments should be carried out.

If the manufacturer's instructions are not available, it will be necessary to identify the trimmers on the receiver so the alignment can be properly made.

Single-Band Receivers. In a single-band superheterodyne of the standard broadcast type, the i.f. trimmers will be inside the i.f. shield cans in most instances, or will be mounted very close to the i.f. coils. If the cores of the i.f. coils are varied, the adjustments will be right on the shield can. If you don't see the adjustments on the top or side of the i.f. shields, they may be underneath or at the rear of the chassis.

Standard practice puts the high-frequency trimmers right on the tuning condenser gang in a single-band receiver. It is rather rare to find them elsewhere.

An examination of the tuning condenser gang will show whether you should expect a padding condenser. If all of the rotor sections are the same size, expect a padding condenser. This may be most anywhere on the receiver chassis. It may even be necessary to trace to the padding condenser from the oscillator.

On the other hand, if the oscillator section of the tuning condenser gang has special cut plates, you have no reason to expect the presence of a padder, except where variable coil cores are used.

If you see no tuning condensers, expect variable coil cores, plus other trimmers in some instances.

▶ In checking the trimmer condensers, you are very likely to find that you have an extra trimmer or so. Consider such extras carefully. They may be wave trap adjustments, regeneration controls or, on older receivers, an i.f. adjustment for the individual transformer feeding a separate a.v.c. tube. The manufacturer's instructions should be followed in such cases, if possible.

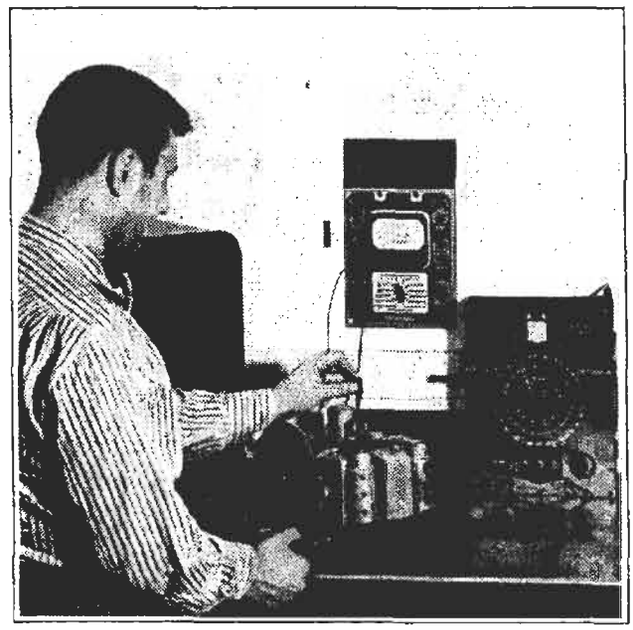

Alignment requires a signal generator and an output meter. Separate instruments, as shown here, or a combination multimeter-signal generator can be used. The signal generator furnishes a signal of known frequency and controllable output. The adjustments are made for maximum indication on the output meter. A simple procedure, yet it is vital to the radio performance that the proper steps be followed.

All-Wave Receivers. In all-wave

receivers, the i.f. amplifiers are just like those used in a single-band receiver. When we come to the problem of identifying the preselector and oscillator trimmers, however, we find an increased number of trimmers. In some instances, there may be separate high-frequency trimmers and separate padders for every wave band. In others, there may be a complete set of trimmers for certain bands and only some of the trimmers on other bands. More information will be given on this when you come to the instructions for aligning all-wave receivers.

EQUIPMENT

In order to align a receiver properly, a well calibrated signal generator is a definite requirement. It is possible to align by using broadcast stations and a signal tracer, but the use of a signal generator is much the preferred method.

You will require, in addition, some kind of output meter. Alignment tools will also aid in making the alignment.

Signal Generator. The s.g. (signal generator) used for alignment purposes should preferably be an all-wave type, with accurate calibration, and an attenuator or volume control to vary the output from maximum all the way to practically zero output.

Signal Generator Connections. The signal generator should have a condenser in series with the connecting leads, to prevent the d.c. path through the attenuator from short-circuiting plate supply voltages or grid bias voltages. If this condenser is not already included in the s.g., one should be added. The condenser can be most any size when aligning i.f. stages, as it just acts as a blocking condenser.

When a signal generator is connected to the input of a receiver, it replaces the regular antenna, which removes the effect of the regular antenna inductance and capacity and affects the alignment of the preselector circuit. The effect of the antenna can be restored by using a "dummy antenna" in series with the signal generator hot lead. Recommended values are a 200-mmf. condenser, a 20-microhenry coil and a 25-ohm resistor in series for broadcast band alignment. However, a condenser of about 200 mmf. can be used alone and the alignment of the receiver will be reasonably correct for the average antenna. For the short-wave bands, a 400-ohm resistor is usually considered a good dummy antenna and is placed in series with the hot signal generator lead.

▶ Receiver manufacturers will frequently advise the use of rather elaborate coupling devices and dummy antennas. In most instances these are not an absolute requirement. When the alignment of a receiver has been properly carried out, the preselector stage is the only stage which will be at all out of alignment if you don't use these devices. Most servicemen make a practice of touching up the preselector trimmers when the receiver is installed to compensate for antenna effects, in cases where distance reception is an important requirement. This has the advantage of correcting for actual conditions.

▶ Another decoupling device which is occasionally used is the one shown in Fig. *4*. In many instances, a signal generator is connected between the grid circuit of a tube and ground. Unless a condenser is used in series with the signal generator, the d.c. path through the attenuator will short-circuit the a.v.c. voltage supply. Also, the resonant circuit may be tuned to some frequency which will cause it to act as a partial short circuit on the output of a signal generator, thus

reducing the amount of energy which can be fed into the circuit. In such cases, the signal generator can be coupled to the grid top cap through a blocking condenser, and a resistor can be placed in series with the grid circuit. The resistor has a value between 10,000 and 50,000 ohms and is in series with the tuned circuit so far as the signal generator is concerned, so no matter how the tuned circuit may be set, the signal generator is feeding into an impedance at least equal to the value of the resistor.

In the case of single-ended tubes, which have their grid terminals on the bottom, it is not easy to add the series resistance. In such cases, the signal generator is connected to the grid terminal through a condenser, and the tuned circuit is set near the low-frequency end of the band, where its effect is minimized.

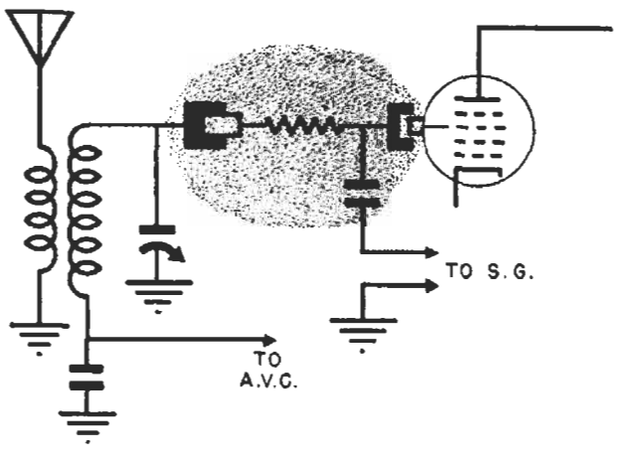

FIG. 4. An R-C coupler for the s.g.

Output Meter. The most common output meter is an ordinary a.c. voltmeter using a copper-oxide rectifier, such as would be found in most any service multimeter. Using a voltage range of from 15 to 50 volts, this meter is usually connected between the plate of the output tube, point *e* in Fig. *5*, and chassis. (To prevent short-circuiting the plate supply, a 600-volt condenser rated at about .5 mfd. must be used in series with this voltmeter, if one is not already built into the analyzer.)

The reason for using this position is that the a.c. voltage is reasonably high, and this is a point which is easy to find, as any tube chart will give the location of this socket terminal, which can also be found by tracing back from the output transformer.

Of course, if one has a lower-range a.c. voltmeter, the connection can be between *d* and ground or even between *b* and ground. In each case it is necessary to have a series blocking condenser to prevent d.c. current from flowing through the a.c. rectifier.

Many servicemen make use of an a.c. voltage range of from 1.5 to 3 volts, by connecting across the voice coil of the loudspeaker. This is between terminal *f* and ground of Fig. *5*.

All of these points will give equally good indications, using the output of a modulated signal generator. Usually, standard signal generators use a modulating frequency of about 400 cycles, which is indicated adequately with any standard a.c. voltmeter. It is important that you realize in all cases you are looking for an alignment adjustment resulting in *maximum* response rather than any particular *amount* of response. You don't care whether the output is 10 volts or 12 volts or 25 volts, just so you have obtained the most there is by adjusting any particular trimmer.

Should the receiver have a tuning indicator either of the meter or tuning-eye type, you can use it to indicate maximum response, because it works from the automatic volume control circuit of the receiver. This is not quite as accurate as using an output meter, however, as the a.v.c. circuit may level off.

A high-sensitivity d.c. voltmeter or a d.c. vacuum tube voltmeter can be used by measuring the a.v.c. voltage. If the instrument does not indicate on a.c., it may be connected between

point *b* and ground of Fig. *5*. If audio signals might interfere, the signal generator can be used without modulation, or the connection can be between point *a* in the a.v.c. circuit and ground.

Point *c* is an undesirable position due to the presence of some r.f. voltage. It is also a more difficult point to locate, as R_2 may actually be inside the i.f. transformer shield, while point *b* is a terminal on the volume control and is easy to locate.

Alignment Tools. The usual trimmer condenser adjustment is an ordinary screw or, less often, a hexagonal nut. In a few instances, two trimmers will be combined, so there is a screw in the center of a nut, both being adjustable. Primary and secondary trimmers of a single i.f. transformer might be thus combined.

▶ Although we normally think of an adjustment as varying a trimmer, in many instances the inductance of the coil will be changed instead. This doesn't matter, as the same basic alignment procedure is still followed.

The same screwdriver or socket wrench adjustment is made on a variable core, except on the type where the core is fastened on a plunger which is held by a friction locking nut. Here, the locking nut is released and the plunger is then pushed in or pulled out. A special hook-shaped tool is recommended for this adjustment.

▶ When the adjusting device is grounded, any ordinary screwdriver or socket wrench of a suitable size can be used for alignment. However, if the adjustment is not grounded, an ordinary metal screwdriver or socket wrench and the operator's hand will add capacity to the circuit. When the tool is removed, the circuit is no longer in alignment. You can overadjust in an attempt to have the maximum occur when the tool is removed, but this is a guess-and-try method and is not recommended. Instead, servicemen use a tool made of a rod of bakelite or other insulating material. At the end there is a very small metal screwdriver blade or a suitable socket for adjusting purposes. As the body of the rod is an insulating material and there is only a very small amount of metal in the device, body capacity effects are practically eliminated.

CHECKING AND CORRECTING DIAL CALIBRATION

Since proper dial tracking is one of the important indications of the correct alignment procedure, it is necessary that the dial itself be in the proper relationship with respect to the tuning condenser gang.

There are many kinds of receiver dials, ranging all the way from those used on inexpensive midgets, where calibration marks may be only every 50 or 100 kc., to those on expensive communication receivers where the calibrations may be closer than 10 kc. The closer the calibration marks, the closer the alignment should bring the stations to the proper points.

However, before we can align a receiver properly, we must be sure that the dial itself has not slipped from its proper position. An attempt at alignment with respect to an erroneous dial position will result in misalignment of the receiver.

In some dial mechanisms, the dial pointer is fastened mechanically right to the shaft of the tuning condenser gang, so that there is usually not much trouble. In most cases, however, the dial pointer is operated by gears or by a dial cord employing friction at some point in the mechanism, so there is considerable chance of slippage.

▶ If the manufacturer's instructions are available, you will usually find

information on checking the dial position. In most instances, the pointer should sweep over the entire calibration range of the dial face, with a certain amount of overlap at each end. There is often a calibration mark either at the low-frequency or high-frequency end of the band. If there is such a mark, you are supposed to set the dial pointer at that point, with the tuning condenser gang either completely open or completely closed, as the case may be.

In the case of dials having pointers which sweep over a range of one-half circle or 180°, the pointer is usually intended to be horizontal at each end of the tuning range.

▶ Should no instructions be available, check the dial sweep. For example, if you find the dial pointer right on the end of the markings at one end but with an over-sweep of ⅜ inch or more at the other end of the dial, the pointer should be moved so that the amount of overlap at both ends is about the same.

If the dial slippage is not complicated by misalignment, usually all the stations will be off in the same direction, being 10 or 20 kc. high or low, as the case may be. However, if the dial slippage has resulted in someone else misaligning the receiver, or if the receiver is out of alignment anyway, this may not be true.

SETTING RECEIVER CONTROLS

In setting the controls before alignment, follow the manufacturer's instructions or the simple rules that follow.

While the i.f. section is being aligned, it is very desirable to set the receiver tuning dial at some point where no station is tuned in. Usually, the manufacturer's instructions will have you set the dial at the low-frequency end of the band, as there are fewer stations picked up at this end under normal conditions. Another reason for this will be given when you take up alignment procedures.

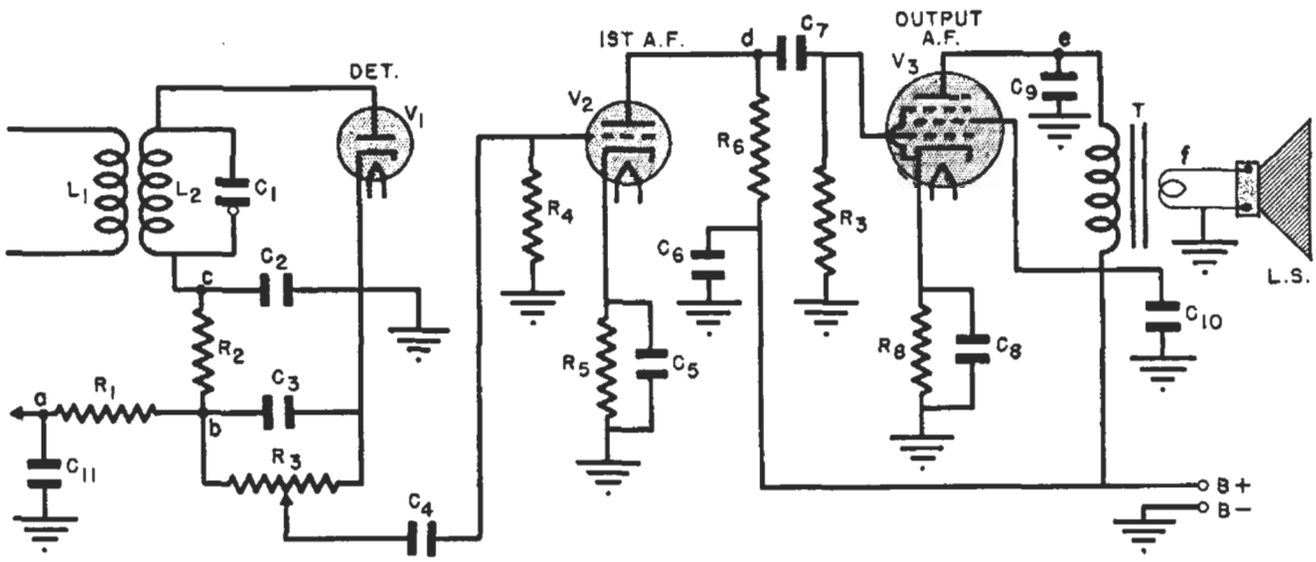

FIG. 5. Typical output meter connecting points are shown at a, b, c, d, e and f.

The high-frequency adjustment of a receiver is usually given in terms of some arbitrary setting such as 1400 kc., 1500 kc., or some other value. The manufacturer is merely indicating a value which *can* be used in a case of this kind, and if you have a local or interfering station on the recommended frequency, you will naturally shift a little to avoid such interference. If 1400 kc. is recommended but has an interfering station on it, you

will go, for instance, to 1450 kc. or some nearby value for alignment.

The same thing is true of the low-frequency end. Usually, 600 kc. is recommended. Again, it may be that you will find some local station interferes. If so, use 580 kc. or 620 kc., or any nearby value which is free from interference.

Naturally, during the alignment procedure an external antenna is not normally connected to the receiver. However, it may still pick up strong local stations, particularly if the set uses a built-in loop antenna which cannot be disconnected.

▶ The volume control on the receiver may be set at any point which will permit the output indicator to function in a normal manner. It may be desirable to turn down the volume control to prevent the 400-cycle note from being too loud, if the a.v.c. voltage is being used to indicate signal strength.

But if the output meter is an a.c. voltmeter in the audio amplifier, the volume control setting must be high enough to give a useful reading. Common practice is to set the volume control on the receiver at maximum and control the signal with the signal generator attenuator.

▶ The setting of the tone control does not matter, as long as it has no effect on the selectivity of the set. In some instances the tone control will change the selectivity by providing band-spread in the i.f. amplifier. In such cases, it should be set as described when we discuss this type of alignment.

▶ Of course, the wave-band switch must be set for the band you are aligning. When aligning the intermediate frequency amplifier, the wave-band switch is normally set at the broadcast band position.

▶ Should the set have automatic frequency control, this control should be turned off during the regular alignment procedure. The manufacturer's instructions should be consulted if other special controls are found.

Methods of Alignment

We are now all ready to align, with a signal generator and output indicator at hand and with the receiver thoroughly warmed by being turned on for a half hour. This warming up period is necessary because heat may change the values of trimmers, etc., slightly, and the set should be lined up in its operating condition. We can now go through the actual alignment for several different conditions and types of receivers.

BASIC ALIGNMENT

By far the most common service condition will be the one where alignment is only slightly off. The set sensitivity and selectivity may be below normal, and stations may have shifted 10 or 20 kc. on the dial. However, the set is not completely out of alignment, nor has it been tampered with.

Presuming that you have carried out all of the preliminary steps, you can proceed as follows:

Step 1. Suppose the receiver is similar to the one shown in Fig. *6*. Here we have a single-band, conventional first-detector-oscillator tube stage, followed by an intermediate frequency stage, which in turn feeds into the second detector.

The signal generator is connected

between the control grid of the converter tube (point *b* in Fig. *6*) and chassis to align the i.f. section. The receiver is normally tuned to the low-frequency end of the broadcast band, at some point where no local station interference will exist. Furthermore, by tuning the receiver to the low-frequency end of the dial, the tuned circuit L_1-C_1 will not act quite so much as a short circuit to the output from the signal generator.

As mentioned previously, the signal generator should have a condenser in series with it to avoid short-circuiting the a.v.c.

Should there be any trouble about making the connection to the control grid of the converter tube, many servicemen connect the oscillator to the antenna and ground terminals of the receiver (point *a* and chassis). If the signal generator output is high enough, it will force its way through the preselector tuned circuit with sufficient energy to permit proper alignment of the i.f. amplifier.

▶ With the signal generator connected, it should then be set at the i.f. value for the receiver. This can be determined from the manufacturer's instructions. If these instructions are not available, it is usually rather easy to determine the proper i.f. value. Start with the signal generator near 500 kc., and reduce its frequency slowly but steadily. The *first* signal which comes through the set when proceeding from 500 kc. downward, is at or near the correct i.f. value. In the past, standard intermediate frequencies of 175, 260, 370, 455, 460, 465 and 480 kc. have been used. If the value indicated by your signal generator is near one of these frequencies, you can shift to this standard frequency and proceed with the alignment. Should there be any doubt about the signal, tune the receiver over a 20 or 30-kc. range. If the signal varies or disappears, a signal generator harmonic is coming through the regular preselector channel. If the signal remains about the same strength, you have the signal coming through at the i.f. value properly.

After the s.g. is set at the right frequency and the signal is coming through to the indicator, adjust condensers C_6, C_7, C_8 and C_9 to give maximum output. It is usually desirable to go back over the trimmers, because there is a certain amount of interaction between primary and secondary trimmers. You can start with any of the four condensers and then go to any of the others. Usually one transformer pair is aligned before going on to another transformer, however.

▶ In the i.f. amplifier stage shown in Fig. *6*, tuned primary and secondary (double-resonant) i.f. transformers are used. These are extensively used in supers, yet other types will be encountered. Transformers having only the primary or only the secondary tuned are often found in the less expensive four-, five- and six-tube supers. No difficulty should be experienced when you run across these units, as the single adjustment per transformer is made for maximum output, as with other i.f. transformers.

If variable iron cores are used instead of trimmers, the adjustment is also for maximum output.

Remember, we are watching the tuning indicator or the output meter at all times to determine just when the maximum is obtained. If you turn a trimmer beyond the point of maximum response, the output will drop again, so you must turn back to the maximum point.

Step 2. Having adjusted the i.f. amplifier to the proper frequency, we now move the signal generator to the

antenna and ground terminals of the receiver (if not already there).

Should the receiver input be a loop antenna, either use a special loop coupler or make one by using a short piece of wire and making a two- or three-turn loop with it. This wire loop is then connected to the hot signal generator lead and is brought near the receiver loop antenna.

The receiver dial is now set at the highest frequency marked on the dial, if it extends to 1600 or 1700 kc., and the generator is set to the same frequency. The oscillator high-frequency trimmer (C_4 in Fig. *6*) is then adjusted for maximum response.

The dial and the generator are now set at some frequency between 1400 and 1500 kc. and the preselector trimmers are adjusted for maximum output, thus insuring better preselector tracking at medium frequencies. Should the maximum tuning range extend only to 1500 kc., the oscillator and preselector can be adjusted at the same frequency setting.

Step 3. The next adjustment is made at the low-frequency end of the dial, when the receiver has a padder. The dial is then set somewhere near 600 kc. and the signal generator is set to the same frequency. Then, padding condenser C_5 is adjusted. If the dial calibration at the low-frequency end of the band is not far off, this adjustment is simply made for maximum output.

Rocking. Should the dial calibration be off somewhat at the low-frequency end of the band, it may then be necessary to "rock" the low-frequency adjustment. To do this, set the *signal generator* at 600 kc., or some similar frequency where no local stations come in. Then tune the receiver for maximum response, disregarding the tuning dial setting altogether. You may find that the 600-kc. signal from your signal generator comes in at 610 kc.

Now turn the tuning dial slightly in either direction from the maximum response position and readjust the padding condenser C_5. Notice whether these two adjustments give a higher output than the first position. If the output decreases, turn the receiver dial in the other direction. Pay no attention to whether or not you are approaching the correct point on the dial during this first adjustment. All you are trying to do is move the dial and the padding condenser to find the point where the actual maximum in response is obtained.

For example, you may find that at 610 kc. the output is 20 volts. By changing to 605 kc. and readjusting the padder, the output may become 22 volts. As you go closer to 600 kc., the output may drop again. Go back to the point which gave you maximum response.

This procedure is known as "rocking," because you rock the dial back and forth until you find the actual resonant point of the preselector, while you are adjusting the padder to get the maximum output indication.

Step 4. Now return to 1400 kc. and readjust C_4, as there is an interlocking action between the low-frequency and high-frequency adjustments of the oscillator.

Step 5. Step *4* causes the padder adjustment to be off somewhat, so repeat Steps *3* and *4* until the signal generator frequencies are picked up at the correct points at both ends of the band. The final adjustment is made at the high-frequency end.

PROCEDURE FOR SETS FAR OUT OF ALIGNMENT

The alignment procedure described next is like the basic alignment procedure, except that methods are added

to handle a set that has been tampered with, so that it is far out of line.

I.F. Alignment. We must first decide what the correct i.f. value is for the particular receiver. If the manufacturer's instructions are not available, look for a service manual listing intermediate frequencies. Failing this, consider the type of receiver and its approximate age. Most of the recent receivers have intermediate frequencies between 455 and 480 kc. As a starter, therefore, you can use one of these frequencies on any standard receiver made in the last five years or so. On older sets, as your first trial, find and use *some frequency which allows adjustment of the i.f. trimmers near the center of their ranges.* Trimmer condensers should not be wide open, nor should they be completely tight. One-quarter to one turn back from the tight position is usually the correct range.

When the i.f. amplifier is far out of alignment, it will usually be necessary to feed the signal generator output through fewer tuned circuits. Therefore, you will have to move the signal generator along as you align, starting near the second detector and moving back toward the input. This is particularly necessary when two i.f. stages are used.

In a circuit such as shown in Fig. *6,* we should start the alignment with the signal generator connected to point *d.*

If the adjustment is too far away from the correct i.f. value, no signal may go through transformer T_3 until you find for what frequency it happens to be adjusted. You should vary your signal generator over a wide range, until a signal comes through the transformer, permitting the adjustment of trimmer condensers C_8 and C_9 for maximum response. If you are far away from the correct i.f. value, you can now move the signal generator toward the proper value until you can just barely hear the signal. Then readjust C_8 and C_9 for maximum output at the new setting. Repeat this procedure until you have brought this transformer up to the right i.f. value.

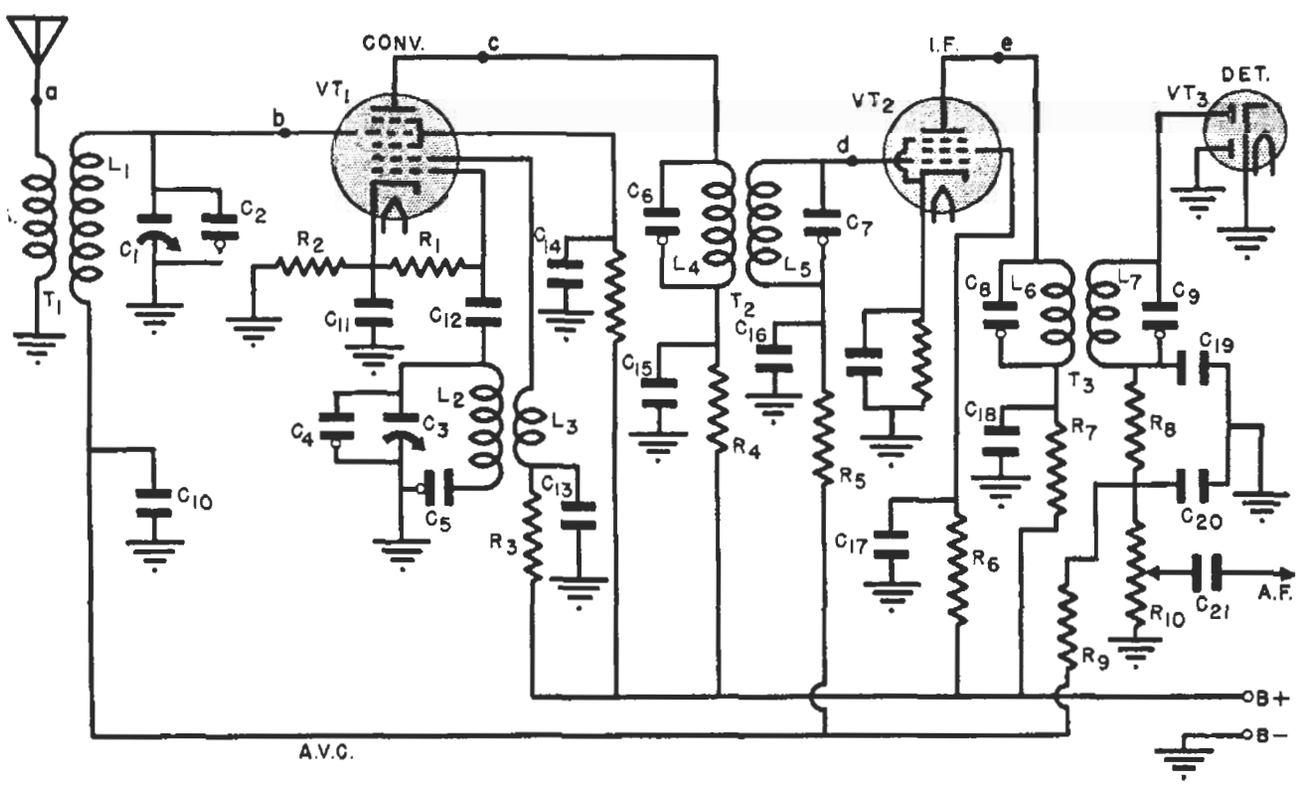

FIG. 6. This single-band superheterodyne diagram shows the connecting points for the s.g.

▶ After getting C_8 and C_9 to the correct i.f. value, move the generator back to point *b* to adjust C_6 and C_7. With the i.f. tube amplifying normally and with transformer T_3 tuned to the right frequency, it is usually possible to force the correct frequency through transformer T_2. Condensers C_6 and C_7 are then adjusted for maximum output.

▶ For the final adjustment, leave the signal generator at point *b* and readjust all four trimmers for maximum output, following the simple basic procedure.

Preselector and Oscillator. If there is no r.f. stage in the preselector, we can now move the signal generator to the antenna and ground terminals and proceed with the oscillator and preselector alignment in the manner described before. It will definitely be necessary to rock the dial at 600 kc. if a padding condenser is provided.

If there is a radio frequency stage, we may have to go to the plate of that stage in order to force a signal through the converter tuned circuit first, before moving back to the antenna for final preselector alignment.

With the preselector in reasonable alignment, you should examine carefully the calibration of the dial scale. If the receiver makes use of a padding condenser, the foregoing adjustments will probably give a reasonable tracking. On the other hand, should the oscillator be one of the cut-plate type, the stations at the low-frequency end of the band may be considerably off from the proper dial position, indicating an incorrect i.f. value. If the station comes in at a *higher* frequency setting, use a *lower* i.f. value, and vice versa. Shift the i.f. 10 kc. or so as trials, and then realign the receiver to see how this affects the dial calibration.

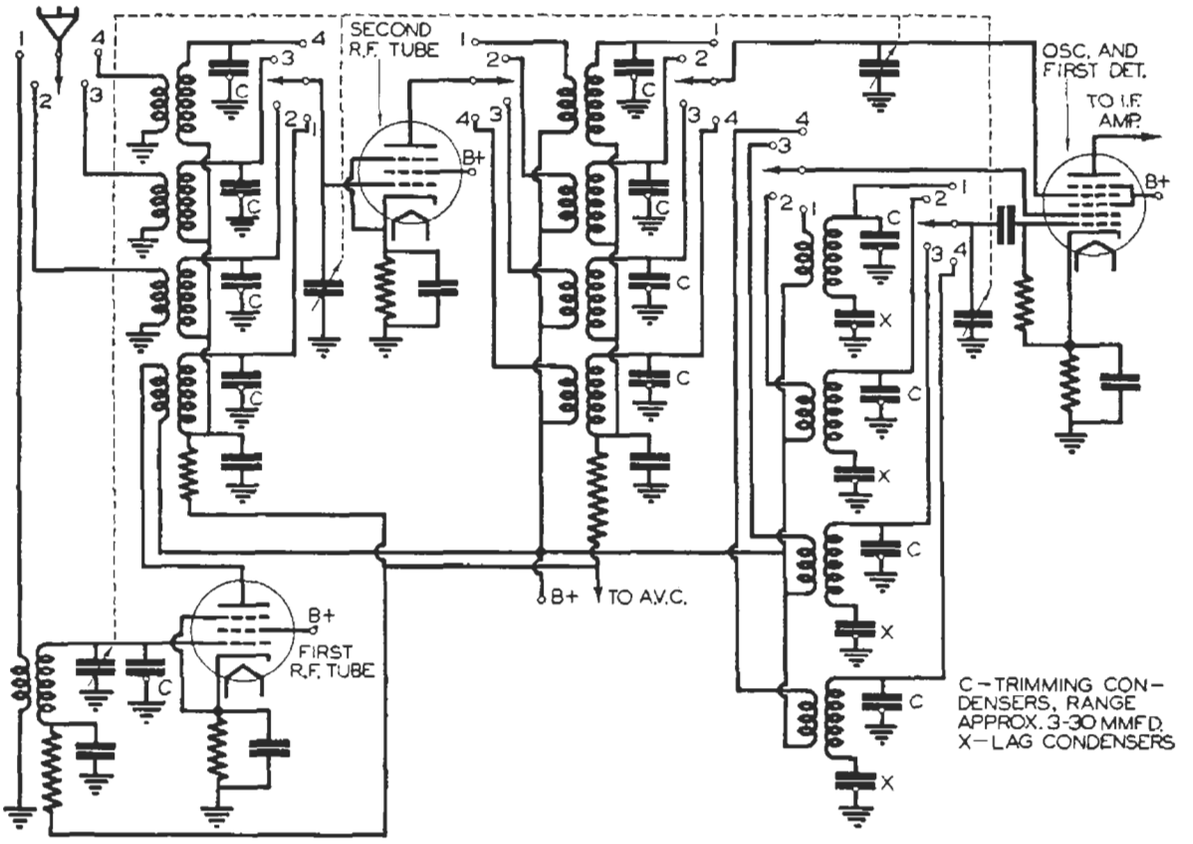

FIG. 7. An all-wave receiver with independent bands.

FURTHER ADJUSTMENTS

Although we have adjusted the high- and low-frequency ends of the

band, tracking in between will depend on the tolerance of the tuning condensers and coils. In most cases, the alignment will be entirely satisfactory. However, to insure exact tracking at more dial frequencies, many receivers have tuning condensers with segments or slots cut in the end rotor plates of each section. By bending these segments properly, the capacity can be changed to correct the alignment over the entire tuning range, where the maximum is to be obtained. You would set the station dial near the high-frequency end, so the first segment meshes with the stator—note dial frequency value—set the signal generator to this frequency, and bend the segment on each section either out or in to give maximum output. Use an insulated aligning tool or probe and, before making a permanent bend, move the segment first one way and then the other to determine which way gives greater output. Now move the rotor so the second rotor segment meshes with the stator (note the frequency value on the station dial), set the signal generator to this value, and bend the segment for maximum output. Repeat this operation until all segments are adjusted.

ALL-WAVE RECEIVER ALIGNMENT

With an all-wave superheterodyne, the i.f. stages are always aligned first in the usual manner, then each r.f. range is considered independently. Often the band-switching circuits in an all-wave receiver will make it necessary to align the bands in a definite order, as set forth in connection with typical circuits discussed now.

Independent Bands. Fig. *7* shows a conventional, highly flexible preselector system for all-wave reception. One stage of r.f. amplification is used in all bands except the highest one, where an additional r.f. stage is employed. Each tuned circuit in the preselector has a high-frequency trimmer *C*. When a different range is switched in, another set of high-frequency trimmers is used. Hence, the adjustment of *C* for one band in no way affects another band.

The oscillator circuit for each range has its own high-frequency trimmer *C* and its low-frequency padder *X*. The tracking alignment may be carried out in any order desired, as the bands are completely independent. Follow the usual procedure for each band, adjusting at the high and low ends. If you decide to bend rotor segments, remember you may do this for only one range and that range must be aligned first.

You may find a receiver with this preselector system which has trimmer condensers on the gang of variable condensers. Check to see which range does not have the high-frequency trimmers on the coils and *align this band first*, using the trimmers on the ganged condensers. As a rule, they will be used for the highest-frequency range. If you use them to align the wrong band, you may add so much capacity into the circuit that the trimmers in some other band cannot be reduced sufficiently to make an alignment.

Cascade Alignment. A number of manufacturers wind all preselector coils on one winding form and all oscillator coils on another coil form. This reduces costs but introduces a problem in alignment that you should recognize. Such a construction is used in the circuit shown in Fig. *8*. Oscillator coils L_4, L_5 and L_6 are all wound on one coil form; preselector coils, L_1, L_2, L_3 and broadcast primary coil L are also wound on a single coil form.

Switches SW_1, SW_2 and SW_3 together make up the wave-band switch. In position *1*, the receiver is set to the highest-frequency band. Observe that

coils L_3 and L_2 are shorted by switch SW_2, leaving coil L_1 to be tuned by condenser C_P. The high-frequency preselector trimmer is C_1. In the oscillator section, switch SW_3 (when placed at position *1*) shorts coils L_6 and L_5, leaving coil L_4 to be tuned by condenser C_0. The high-frequency trimmer is C_4.

When all switches are set to position *2*, only coils L_3 and L_6 are shorted. In this position, coil L_5 is the major oscillator inductance, but coil L_4 is still in the resonant circuit and is also

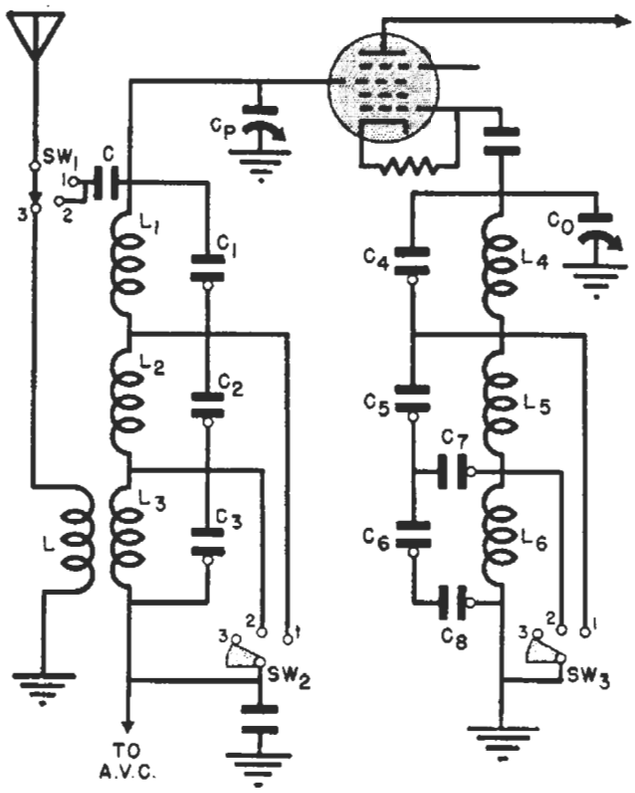

FIG. 8. The preselector-oscillator circuits of a receiver requiring cascade alignment.

included in any tuning performed by C_0. In this case, condenser C_4 (the trimmer) has the effect of reducing the effective inductance of L_4 for this band. Similarly, preselector coil L_2 is the major inductance but L_1-C_1 are in the tuning circuit. So, if you adjust band *2* first, then band *1*, adjusting C_4 in the latter case will upset the previous alignment. We must realize, therefore, that if we align the high-frequency band first, all other trimmers are shorted and of no importance. By adjusting bands *1*, *2* and *3* in order, each adjustment made is included in the next one. That is why we call it cascade alignment.

To align this all-wave preselector, we set the receiver at a frequency near the high-frequency end of the highest-frequency band, set the signal generator to the same frequency, and adjust C_4 and C_1 for maximum output. There is no low-frequency oscillator padding condenser on this band.

Next, you align the second frequency band, in this case the L_2-C_2 and L_5-C_5 circuits. Under no condition should you touch trimmers previously adjusted. Set the receiver and signal generator to a high frequency on this band, then adjust C_5 and C_2 for maximum output. Set both the receiver and signal generator to a low frequency and make a rocking adjustment with C_7 for maximum output. Check alignment at the high-frequency end, adjusting C_5 if necessary.

The third or broadcast band is handled the same way, adjusting C_6 and C_3 at the high frequency and C_8 at the low-frequency points.

Reasonable dial tracking is expected on band *1*, without a padding condenser, due to careful manufacture and the proper choice of the oscillator coil value. The low-frequency padder C_7 in the second highest band may be omitted in some receivers or may be a fixed condenser. If trimmers are mounted on the variable condenser, use them for the highest-frequency band.

In a cascaded preselector circuit, slotted rotor plates are not usually provided, as they can be adjusted only in the highest-frequency band. If you try to bend them in the broadcast band, you upset all previous adjustments, and realignment offsets the gains obtained in the broadcast band.

Special Data. Identifying trim-

mers on all-wave receivers is quite a problem. They may be mounted on strips in some definite order or they may be scattered throughout the set. If at all possible, obtain the manufacturer's instructions for such jobs. Otherwise, you will have to spend some time finding the proper adjustments. This problem is complicated by the fact that padding condensers, or even high-frequency trimmers, may not be used on all bands.

Identifying trimmers by tracing from the coils may be possible, if the coils are not in shields and can be traced to the band-switch or otherwise distinguished.

If this fails, turn the band-switch to the highest-frequency band, tune in a signal and then touch the trimmers one after the other with a metal screwdriver. You will hear noises or detune any signals being received when you touch the trimmers in that band. Repeat this procedure for the other bands to pick out the remaining trimmers.

Padding condensers will usually have more plates than the trimmers. Also, the trimmers themselves may be larger or have more plates for the lower-frequency bands.

The manufacturer's instructions should give you any unusual data, such as operating the oscillator *below* instead of above the incoming frequency, as is done in a few cases on the highest-frequency short-wave band. If you have no instructions, you should go ahead with the standard procedure and note results.

Be careful in adjusting the oscillator in the high-frequency (short-wave) bands, to avoid "cross-over." Because the i.f. value is so low, compared to the frequency of alignment (usually 18 mc. or so), it runs the usual two points of maximum response close together. Select the setting with the *least* trimmer capacity (plates opened widest) when aligning, to keep the oscillator *above* the incoming frequency, then check response at the low-frequency end of the band.

▶ You may hear a third signal between the two strong ones. This results where the incoming and local oscillator signals differ by one-half the i.f. value, producing a signal which the frequency converter may double. If you keep the level of the signal generator down, this signal can be readily detected by its low output.

Special Alignment Cases

IRON-CORE COIL EXAMPLE

A number of receivers, such as the battery receiver of Fig. *9*, use powdered iron adjustable cores in the coils to give alignment.

The i.f. is aligned in the usual way by connecting the signal generator between grid No. *3* of tube VT_1 and chassis. With the signal generator at the i.f. of 455 kc., adjust cores A_6, A_5, A_4, and A_3 to give peak output.

To make the preselector and local oscillator track, connect the signal generator to the antenna and ground leads and set both at about 1400 kc., adjusting C_5 first and then C_1 for peak output. Note the two oscillator trimmers C_5 and C_6 which are on the variable condenser. Two were used by the manufacturer because the capacity of one was too small. This shows that you must expect design features that seem illogical. (The manufacturer's service manual tells us to set one trimmer one full turn off

the tight or maximum capacity position.)

Now shift the signal generator and receiver dial to about 600 kc., and adjust core A_2 first and then core A_1 for peak output. Repeat the high- and low-frequency adjustments for possible interaction. In a receiver that is considerably out of line, the core adjustment at the low-frequency end of the dial is recommended before the high-frequency adjustment. This is natural, as the variation in inductance of L_2 and L_4 has the greatest effect on dial tracking, particularly at the low frequencies.

Since the *preselector* has a low-frequency adjustment as well as the oscillator, the usual rocking adjustment is unnecessary. If this preselector or low-frequency adjustment is omitted, a rocking adjustment may be required.

VARIABLE-SELECTIVITY I. F. TRANSFORMER ALIGNMENT

In a high-fidelity receiver, the i.f. stages are designed for band-pass action, usually by providing critical coupling between primary and secondary coils. Fixed band-pass action is not desirable in a receiver intended also to receive distant stations through powerful local or nearby broadcasters. Therefore, a control of selectivity from peak to near flat response is incorporated in such receivers. Several such schemes are shown in Fig. *10*.

In another lesson, you will learn how band-pass alignment can be obtained by using visual methods—a cathode-ray oscilloscope technique—which allows you to see the resonant response curve of the r.f. system. Here, we will consider only those systems where a peak adjustment is made in the peak position of the system and band-passing is automatically obtained when set in the high-fidelity position. Therefore, when a variable coupling i.f. transformer is encountered, *set it for selective reception and align the section for peak maximum output.*

The theory of these transformers has been covered elsewhere in the Course, but let us briefly review their action:

Fig. *10A* shows a double-tuned resonant transformer with variable cou-

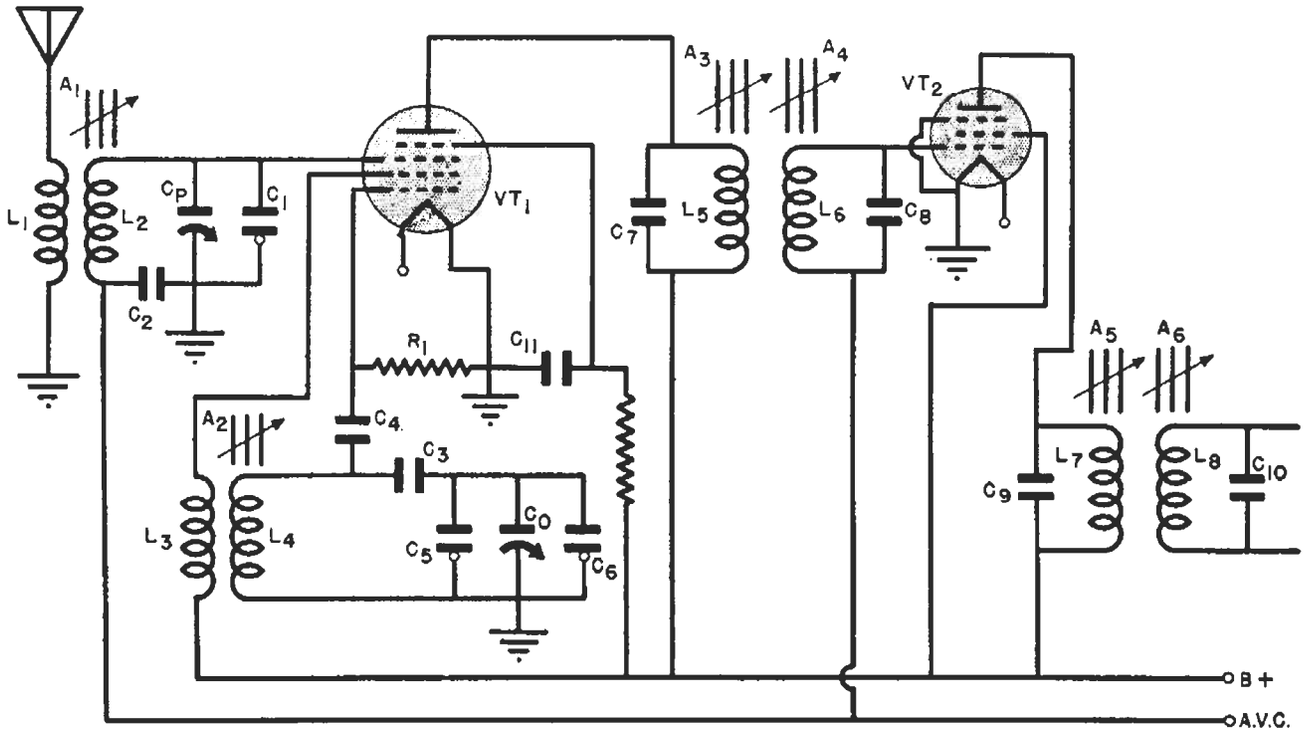

FIG. 9. Movable powdered-iron cores are used as the alignment adjusters here.

pling between primary coil L_1 and secondary coil L_2. To make a peak alignment, set the control for minimum mutual inductance and adjust the trimmers for maximum output. Band-pass action is produced automatically as the control is adjusted for increased M.

When a critically-coupled double-resonant circuit is peaked, the response may be made broad by loading the circuits with resistance. A third winding may be used to introduce loss (equivalent to loading with resistor), as shown in Fig *10B*. When R is zero, coil L_3 is short-circuited and, through mutual coupling, acts as a load on both tuned circuits, giving broad response. When R is at its maximum resistance value, negligible loading exists and the circuits can operate with peak response. To align an i.f. stage with this i.f. transformer, set R for maximum value and adjust both trimmers for maximum output. Decreasing R thereafter produces band-pass action.

The circuit shown in Fig. *10C* is a similar band-pass circuit. There are three resonant circuits, L_1-C_1, L_2-C_2, and L_3-C_3. When C_3 is properly adjusted, the third winding introduces reactance into the other two circuits, so as to provide double peak response. Increasing the resistance of R thereafter reduces this apparent detuning of input and output resonant circuits, and returns the system to peak response. Note that this i.f. transformer will have three trimmers mounted on it.

To adjust this circuit, R is set at maximum resistance. Trimmer condensers C_1 and C_2 are now adjusted for maximum output. Resetting R for minimum or zero resistance, adjust C_3 for *minimum* output.

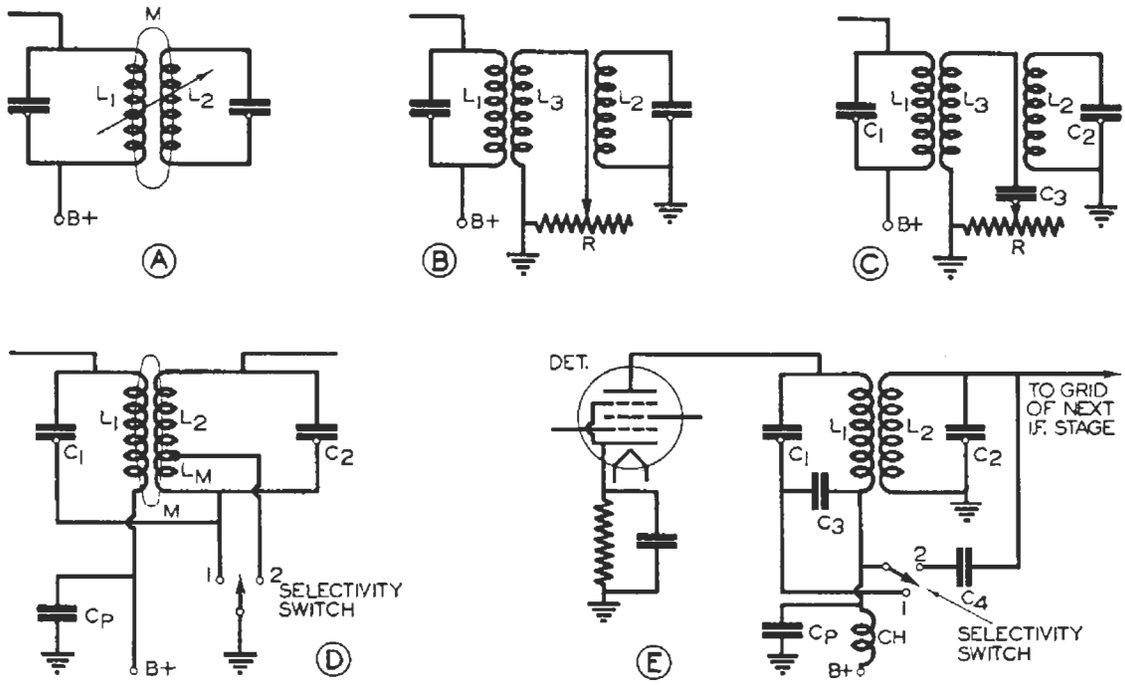

FIG. 10. Several examples of methods used to obtain variable selectivity.

Some receivers employ a two-position fidelity control—a selective and a high-fidelity position. Two such circuits are shown in Figs. *10D* and *10E*. In both circuits, the selective reception is obtained in position *1*, so use this position for peak alignment.

With the switch shown in Fig. *10D* in position *2*, coil turns L_M are added in the L_1-C_1 circuit, lowering the resonant frequency of the primary circuit. The primary current flowing in

L_M and closely coupled to L_2 is out of phase with the secondary current and thus reduces the flux in L_2, reduces its inductance, and increases the resonant frequency of the secondary circuit. This produces double peak response automatically by resonating one circuit above and the other circuit below the i.f. peak value.

▶ In the circuit shown in Fig. *10E*, C_3 is shorted in position 1, while condenser C_4 is inactive; the circuit is then peaked. With the switch set to position *2*, C_3 is in series with C_1, reducing the circuit capacity and increasing the resonant frequency. At the same time, C_4 shunts C_2 and thus reduces the resonant frequency of the secondary. By proper choice of C_3 and C_4, this provides double peak response.

ALIGNING F. M. RECEIVERS

It is standard practice to align the i.f. amplifier of an f.m. receiver before aligning the preselector and oscillator, just as in a.m. receivers. However, the i.f. alignment is somewhat unique in that the i.f. section up to the input of the limiter tube is aligned first, then the output of the limiter and the input of the discriminator are aligned as a separate step.

In practically all cases, f.m. receivers use tuned circuits that are loaded by resistors. Hence, they have a broad peaked response. For this reason, it is possible to align an f.m. receiver by using a standard signal generator as long as it covers the required frequency band—the same kind you would use on an a.m. receiver.

Since the adjustment of the trimmers is relatively broad, we must have ~~some means of output indication~~. The limiter grid current ~~is used~~ for two reasons. First, the limiter ~~grid current varies directly with~~ the signal strength, so it is an accurate output indicator. (The limiter holds the discriminator input constant, and there is no output from a properly aligned discriminator when an a.m. signed generator is used. Hence, an ordinary output meter is useless.) Secondly, since the limiter draws a grid current of 50 microamperes or more when stations are tuned in, it loads the preceding resonant circuits. We must measure the limiter grid current to be sure it is the normal amount so that proper alignment of its input circuit can be insured.

A recommended output indicator is a microammeter having a range of about 200 microamperes. If one is used, it should be inserted in the grid return circuit at the point marked *X* in Fig. *11*. It should be by-passed by a .05 mfd. condenser.

A vacuum tube voltmeter or 20,000-ohm-per-volt multimeter can also be used by reading the voltage drop across the resistor *R* caused by the grid current. The voltage should be at least .00005 (50 microamperes) times the resistance of *R*. The positive meter lead is connected to the chassis and the negative lead to the ungrounded end of resistor *R*. For alignment, the signal generator is connected between the control grid of the first detector tube and chassis. Here it may be necessary to use a condenser-resistor decoupler to prevent the first detector tuned circuit from reducing the signal generator output too much.

The signal generator is tuned to the i.f. resting frequency of the set; this is generally from 10.1 to 10.7 megacycles. (Older sets used 2.1 and 4.3 mc.) Adjust the i.f. trimmers for maximum meter reading. Reduce the signal generator output if the grid current exceeds the range of your output indicator. When you reach the

limiter input be sure that at least 50 microamperes are flowing before you adjust the trimmers corresponding to C_1 and C_2 of Fig. *11*.

▶ Should the i.f. amplifier be so badly out of alignment that an output indication cannot be obtained, you can start with the signal generator hot probe connected to the control grid of the last i.f. tube (the one just ahead of the limiter), and can then work back a stage at a time, aligning each stage as you go. Finally, you can make an over-all i.f. alignment from the first detector to the input of the limiter.

ground, in Fig. *11*, with the negative probe at point *A*. Then adjust condenser C_3 for maximum meter reading. When this adjustment has been made, remove the meter probe from point *A* and connect it to point *B*, so the meter is between *B* and ground. Now, adjust condenser C_4 for *minimum* reading on the output meter. Theoretically, the reading should decrease to zero, but if it does not, use the adjustment giving the lowest meter reading. It is advisable to reverse the meter connections as a check, because the voltage may have passed through zero and reversed polarity.

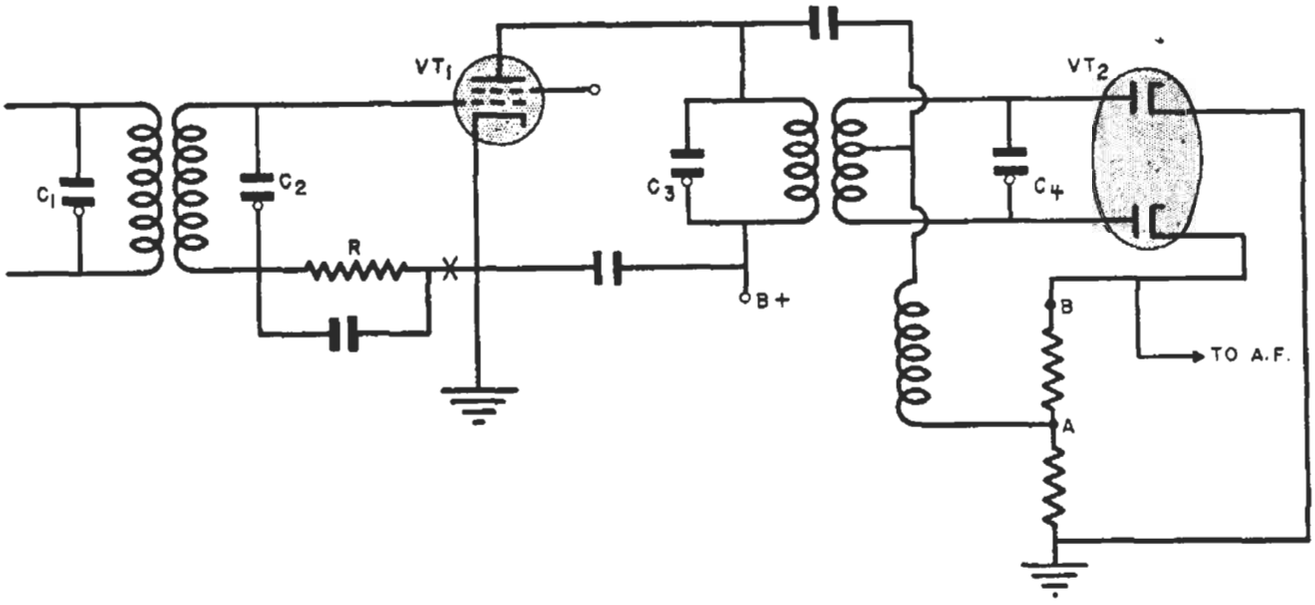

FIG. 11. The limiter and discriminator stages of a typical f.m. receiver.

When the i.f. amplifier has been aligned satisfactorily, the output indicator is removed from the limiter stage. If a microammeter was used in the grid circuit, close this circuit when the meter is removed.

▶ You are now ready to adjust the output of the limiter and the input of the discriminator. Leave the signal generator connections and its frequency setting just as they were for the limiter and the i.f. adjustments. You will need either a vacuum tube voltmeter or a high resistance multimeter as an output meter. Connect your meter between point *A* and

Since many vacuum tube voltmeters will not read reverse polarities, you may have passed the zero point without knowing it. A minimum at point *B*, regardless of meter polarity, completes the i.f., limiter and discriminator adjustments, and none of these trimmers should be touched again.

The preselector and oscillator adjustments are made in the same manner as those for the high-frequency bands of an all-wave receiver. The output meter is connected again as for limiter and i.f. adjustments, and all trimmers should be set for maximum readings.

ALIGNING T. R. F. RECEIVERS

Tuned radio frequency circuits, used extensively years ago, are today found mainly in a few inexpensive receivers.

There are normally as many sections to the variable condenser gang as there are resonant circuits, and each section is provided with a trimmer condenser, usually mounted on the variable condenser gang. Their greatest influence is at the high-frequency end of the range and, assuming that the variable condensers have not warped or been forced out of alignment by a mechanical shock, a single-point alignment usually suffices. An a.c. voltmeter is usually used as an output -meter, connected in the a.f. amplifier as for a superheterodyne.

Employ a signal of about 1400 kc., either from a signal generator or a local station. Set the receiver dial exactly to the frequency of the test signal. Then adjust all trimmers for maximum output. Go through the alignment at least twice. Check sensitivity at a low frequency to verify normal alignment at this end of the range. If sensitivity is low, you may then consider bending rotor segments for better alignment through the entire range.

ALIGNING SUPERS HAVING REGENERATIVE SECOND DETECTORS

In some inexpensive superheterodynes the second detector is regenerative. The amplification and selectivity so gained makes it possible to omit the i.f. amplifier tube and still obtain fair results. In such a set, the output

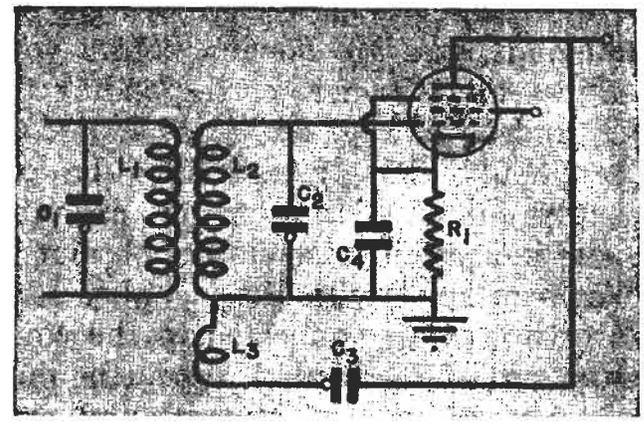

FIG. 12. Regeneration is used to increase the i.f. gain.

of the first detector is fed through the i.f. transformer into the second detector input. The second detector circuit is shown in Fig. *12*, the remainder of the receiver being conventional in design. When aligning a set of this type, the regeneration condenser is adjusted for minimum capacity (least regeneration), and the i.f. trimmers for maximum signal output. The regenerative condenser is then adjusted until a squeal or howl is heard, after which the control is backed off just enough to stop the howl without reducing the output too much. Regeneration condensers are generally controlled by a fiber nut which may or may not be colored red.

Whenever the second detector tube is changed, readjustment of the regeneration control is necessary. Do not go through the entire alignment procedure; just throw the set into oscillation, back off the control until oscillation ceases and give the control an extra 1/4 turn in the minimum capacity direction.

Lesson Questions

Be sure to number your Answer Sheet 39RH-1.

Place your Student Number on *every* Answer Sheet.

***Send in your set of answers for this lesson immediately after you finish them,* as instructed in the Study Schedule. This will give you the greatest possible benefit from our speedy personal grading service.**

1. In a pentagrid-converter, is the oscillator grid resistor value *increased* or *decreased* to restore operation at the low-frequency end of the band?

2. What produces the interference called "i.f. interference"?
P7

3. Name three defects which could cause reception of stations only at the high-frequency end of a tuning band.
P 374

4. When the oscillator tuning condenser has specially-cut plates and the oscillator coil is an air-core type, would you expect to find a low-frequency adjuster in the oscillator circuit? No.

5. Can an a.c. meter be used as an output meter between point *a* and chassis of Fig. *5*?
No

6. Suppose your a.c. meter is not accurately calibrated at 400 cycles. Could you use it for an output indicator? yes

7. Briefly describe the procedure known as "rocking."
P 18

8. How can you avoid getting the oscillator frequency below the incoming signal frequency when making a high-frequency adjustment? By using the signal that comes then when the trimmer plates are open the widest.

9. Why is rocking unnecessary for the circuit shown in Fig. *9*?
The preselector has a low-frequency adjustment

10. Briefly give TWO reasons why the limiter grid current should be used for the output indication in an f.m. receiver.
P 26