How to Make Extra Money

FIXING RADIOS

NATIONAL RADIO INSTITUTE, WASHINGTON, D.C.

No. 16

How To Plan a Professional Workshop

RADIO SERVICING METHODS

NRI TRAINING PAYS...

Dear Mr. Smith:

I was in the restaurant business, earning very little. I enrolled for the NRI Course and started earning money repairing radios about the twentieth lesson. Made enough in spare time to finish paying for the Course; now I work full time in my own business. I think the NRI Course is grand, and I can't praise it enough. I am sorry I did not enroll five years earlier.

E. W. B., Alabama

COPYRIGHT 1947 BY

NATIONAL RADIO INSTITUTE
WASHINGTON, D. C.

FM15M548 1948 Edition Printed in U.S.A.

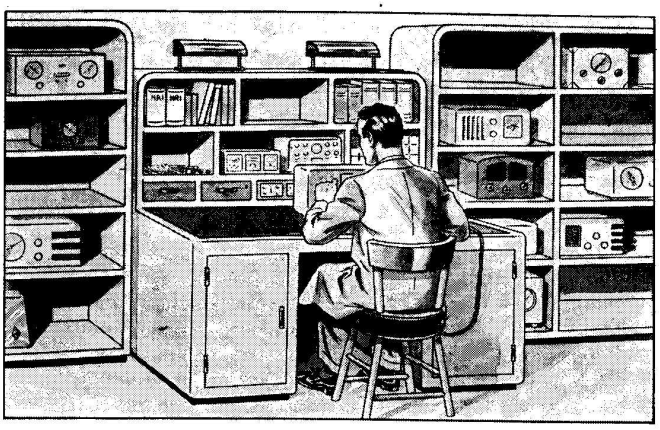

How To Plan a
Professional Workshop

WHEN you start servicing as a business, you will need space to work in and a good bench to work on. It is all right to perform your laboratory experiments and gain practical experience in any location available, but you must have a real shop—even if only a small one—to do professional work. You need such a shop both for your own convenience in working and because your customers will expect you to have one. The second reason is just as important as the first—perhaps more so, since you must get and keep the confidence of your customers to make money out of servicing.

We don't mean that you need an elaborate, expensive shop before you can start earning money as a serviceman. Your first shop can be right in your own home—in fact, many servicemen never have any other location—and your equipment can be very inexpensive. This RSM Booklet will show you how to set up a neat, professional-looking, efficient shop at minimum expense.

Of course, we are not going to tell you in exact detail what you should have in your shop, how it should be made, and where it should be placed. These things depend on your own circumstances and desires. Instead,

we are going to give you general, practical information that you can adapt to your particular needs.

LOCATING THE SHOP

The prime rule to remember in locating and outfitting your shop is that you should *keep the expense within your income.* Many servicemen are over-ambitious at the start and invest far more in equipment and rent than they can hope to get back in a reasonable time. Remember that you are going into business to *make a profit,* not just to have a large shop. Start small, and expand only when you have built up your volume of business to where you can afford it.

For this reason, the best place to set up your first spare-time service shop is right in your own home. Almost any extra space can be converted into a workshop. Your basement, your garage, or a spare room on the first floor is best, because these locations let you keep your business and your home activities separated. Have your shop as near an outside entrance as possible, so customers will not disturb your household.

If you plan to work in your basement or garage, we suggest you partition off a space 8′ x 10′, and cover the walls of the partition, and the ceiling, with insulating wall board (Celotex, for example). This not only gives the shop a finished appearance, but also helps to conserve heat (an important factor in a garage location) and to absorb a good deal of sound.

If no space is available in your home, or if local ordinances prevent commercial enterprises in residential areas, look for space you can rent at a reasonable cost. A single-car garage, or space in someone's store, may be a good choice. When you are estimating costs, remember to include such items as payments for heat, electricity, a phone, and fire and theft insurance in your estimates. Remember, too, that you will make a fair amount of noise in your radio testing, so make sure there will be no complaints after you have set up your shop.

EQUIPPING THE SHOP

Your shop equipment should include a workbench, test instruments, hand tools, storage shelves for incoming and finished work, stock cabinets for replacement parts and miscellaneous hardware, lighting fixtures, electric power outlets, antenna and ground installations, heating facilities (if required), and a telephone.

► There are several requirements a bench must meet if you are to work efficiently. It should have ample work space at the proper height, shelves for your test instruments, convenient electric power outlets, and suitable drawers or racks for your test leads and hand tools. If your space is limited, you will also want your bench to provide space for your NRI Textbooks (in suitable binders), reference books, tube charts, and the circuit diagrams and service manuals that are published yearly. You will also want a convenient place to keep your catalogs of radio parts and equipment.

► To help you keep your shop in order, plan to build storage shelves for your incoming and finished work, and cabinets for your stock of replacement parts. These shelves may be placed on either side of your test bench, on the opposite side of the room, or across one end of the room. Keep your stock cabinet close to your bench.

► Any of the antennas described in a previous RSM Booklet will serve your shop. If you live in an industrial area where the noise level is high, erect one of the noise-reducing types of antennas. Otherwise, an ordinary inverted "L" type will be satisfactory.

► Be sure to arrange for telephone service right in your shop if possible. A telephone is an absolute necessity for a radio servicing business, since most customers want to call you, rather than come to your shop, when they need service.

SIMPLE WORKBENCHES

Almost every serviceman would like a workbench with all sorts of test instruments built into a panel above the bench. Plan to have one some day, but, unless you have some capital you wish to invest, start out with something simpler. (It is often a good idea to make even your first shop fairly elaborate *if you can afford to do so,* because a well-appointed shop helps increase the confidence of your customers in you, and therefore soon brings in more business.)

FIG. 1 SIMPLE WORKBENCHES

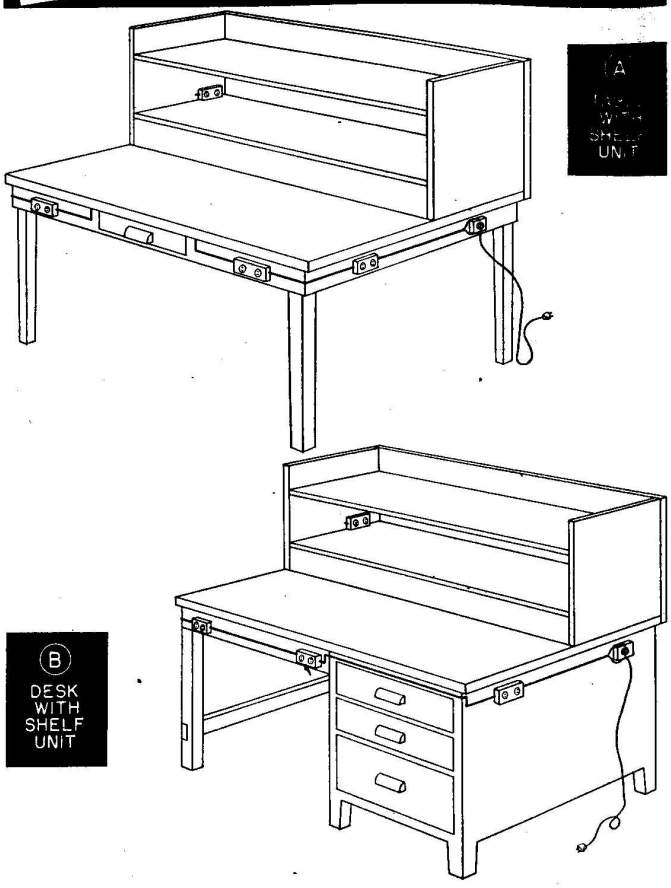

An excellent first bench may be made by adding a shelf unit and a number of electric power outlets to any sturdy table or desk whose top surface measures 30″ x 48″ or larger. Two examples are shown in Fig. *1:* in "A" a shelf unit has been added to a table; in "B" the base unit is a single-pedestal desk. The standard 34″ x 60″ double-pedestal office desk also makes a good foundation unit.

The average desk or table top is approximately 30″ above the floor level. This is a satisfactory height if you want to work sitting down. A height of 36″ to 38″

is more generally convenient, however, for it permits the average man to work in a comfortable position either standing, or seated on a high (24″ to 26″) stool. If you build the table, make it this high (or you can put your table or desk on a platform to raise it to this height). It is better to have a bench a trifle low than too high; a high bench makes you work with your arms held up at an awkward angle. Remember, when you place a receiver chassis on the bench, the place where you do most of your work is about one-half the depth of the chassis above the bench.

If the surface of the desk or table is marred, improve its appearance by painting it with a good grade of flat paint. Choose a fairly dark color so there will be no strong reflections from overhead lights. If you want a more finished job, cover the top with a dark, plain linoleum. Cement the linoleum in place, and bind the edges with any of the modern plastic or stainless steel binding strips commonly used on kitchen cabinet and sink tops.

► Next, add the shelf unit. The major construction details and approximate* dimensions are given in Fig. *2.* After you have the shelf unit finished, fasten a piece of ¼″ plywood or Masonite to the back to provide strength and to keep things from falling behind the bench. Make this back piece as wide as the shelf unit, and 24″ high so that it will extend two inches below the upright end pieces. After you have finished the shelves, sand all surfaces smooth, fill all nail holes, cracks, and poor joints with Savogran Wood Putty or some similar crack filler, and then paint or stain the unit to harmonize with the finish of the table or desk. Hints on painting are given later in this Booklet.

Use wood screws and small angle brackets to fasten the shelves to the upright end pieces. Fasten the whole assembly to the top surface of the bench with wood screws and metal straps. Also run several wood screws

*We say "approximate" dimensions because the actual width and thickness of finished lumber is always slightly *less* than the stated sizes. Thus, a 10″ board may measure only 9¾″ to 9⅞″. Keep this important fact in mind when you measure and cut lumber to make the various benches, shelves, and cabinets described in this RSM Booklet.

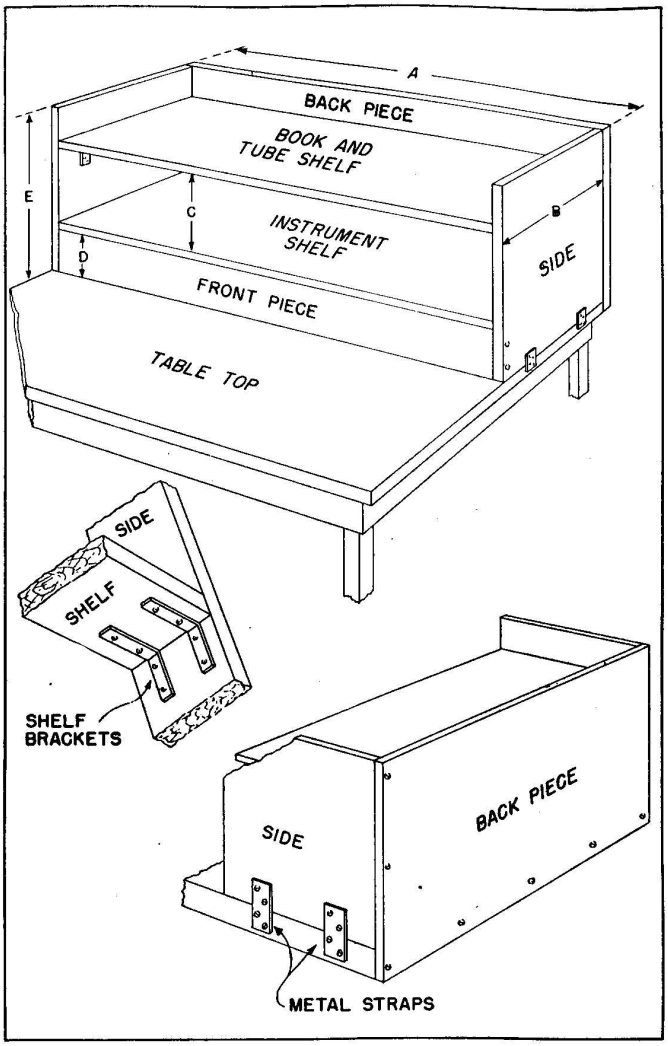

FIG. 2. Construction of shelf units. Dimensions: A, full width of table or desk; B, 10″; C, 13″; D, 5″; E, 22″. Use 1″ clear white pine for shelves, sides, and front piece, ¼″ Masonite or plywood for back piece. Secure the shelves to the sides with angle brackets, as shown in the detail sketch at the lower left. Secure the whole unit to the bench with metal straps, and by screwing back to bench, as shown in the lower right sketch. Fasten the front piece in place with screws run in through the side pieces.

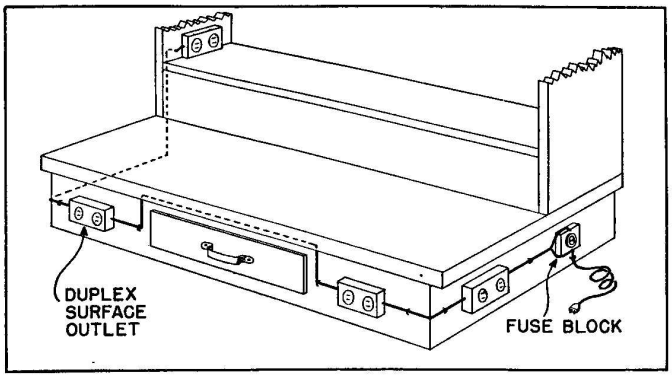

FIG. 3. Suggested wiring for bench. An extra duplex surface outlet can be installed on left-hand end of bench if desired. Connect all outlets in parallel. Staple cords to table with insulated staples. Above drawer, staple cord to top overhang. Split cord at the fuse block and connect fuse into one wire. Be sure to staple cord to bench between the fuse block and the free end of the cord.

through the back piece into the back edge of the table or desk for additional support. Make sure that both your shelf unit and your table or desk are firm; if they wiggle, brace them appropriately.

You will need several electrical outlets on the bench to supply power for your soldering iron, your tube tester, and the radio being tested. For convenience, the outlet for the tube tester should be mounted on the instrument shelf. It is a good idea to have several more outlets than are absolutely necessary, so you won't have to lead power cords across your working surface.

A suggested wiring system for this bench is shown in Fig. *3*. Underwriters-approved rubber-covered lamp cord (#18 wire) is satisfactory, but there will be less power lost in your lines if you use #16 or #14 wire. Fasten the wire to the bench with insulated staples. Notice that a 5-ampere fuse is shown in the line; this is not absolutely necessary, but it may save you a trip to the main fuse box if you happen to short your power line. (House wiring is usually fused at 15 amperes.)

If you wish—and know how—you can install outlet boxes and use BX wiring instead of using the open wiring shown. The more elaborate wiring will look

neater, but is not otherwise any better for your purposes than the wiring shown in Fig. *3*.

► Provide antenna and ground connections at some convenient point on the bench. A handy way of doing so is to bring the lead-ins to a bakelite strip on the bench. Then you can use flexible leads with alligator clips when you want to connect the lead-ins to the antenna and ground posts of a receiver. Mark the lead-ins so you can tell them apart readily.

LIGHTING THE WORK SPACE

Your bench should be well lighted. You can, if you wish, use incandescent lamps in hanging reflectors. However, fluorescent lamps are better, since they give a cool, even light over a large area. We suggest you install one of the factory or industrial units that contains two 20-watt lamps in a white enamel reflector. When you buy the lamp fixture, be sure to get the high power-factor type.

The fixture may be hung on supports projecting from the wall or may be suspended from the ceiling. Don't have it so low that it will interfere with your work, but bring it close enough to the bench to give a good light intensity over the whole working surface. Your objective is to illuminate the bench, not the room. Use other lamps for general room lighting.

Fluorescent lamps sometimes cause radio interference, especially as they approach the end of their useful life. This interference may be radiated directly from the lamp to the receiver, may be radiated from the power supply lines, or may be fed to the set by the power lines. Filters are available (from electrical supply houses) that should help in the second and third cases. Instructions for their use are supplied with them. Direct radiation from the lamp itself can best be eliminated by installing a new lamp.

► In most places, it is perfectly legal for you to install lamps and wiring of the kind suggested for the bench power supply by yourself as long as you plug them into a wall outlet. (It is usually *not* legal for you to connect them directly and permanently to the house wiring unless you are a licensed electrician.) However, unless you

have had some experience with wiring, you may be wise to have a licensed electrician do both jobs for you. Electricians' charges are not usually high—and perhaps you can make a deal with one to do some servicing in exchange for his help on your wiring.

STORAGE SHELVES

You should not pile repaired or unrepaired sets on the floor beside the bench. For one thing, it looks messy; more important, such careless handling may damage sets and cabinets. Instead, you should have storage shelves on which you can place the receivers—preferably two sets of shelves, so you can separate your incoming and your finished work.

These shelves can be mounted on brackets against the wall, or you can make a simple self-supporting case like that shown in Fig. *4*. The dimensions are not critical, and the shelves need not be fancy affairs, but they should be sturdy and deep enough to hold large receiver chassis and record changer mechanisms. If you make the case, put a plywood back on it or cross-braces to keep it upright. Simple blocks or brackets will hold the shelves, and center-bracing is unnecessary if the shelf length is not more than 4 feet. Paint the shelves to correspond to your workbench.

Any ordinary clear lumber may be used, although this means two boards must be used to get the width. Five-ply plywood (1" thick) can be used also for the

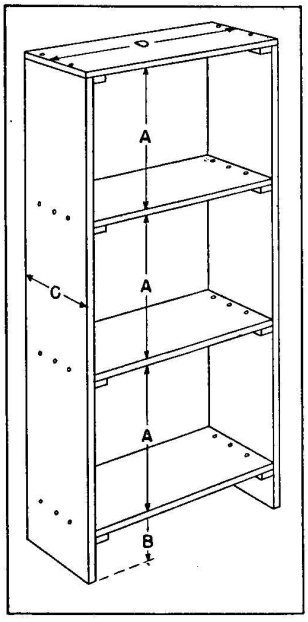

FIG. 4. Storage case. Approximate dimensions: A, 24"; B, 6"; C, 18" to 24"; D, 48". Use 1" clear pine for shelves and sides, ¼" Masonite or plywood for back. Fasten support blocks to sides and shelves with screws.

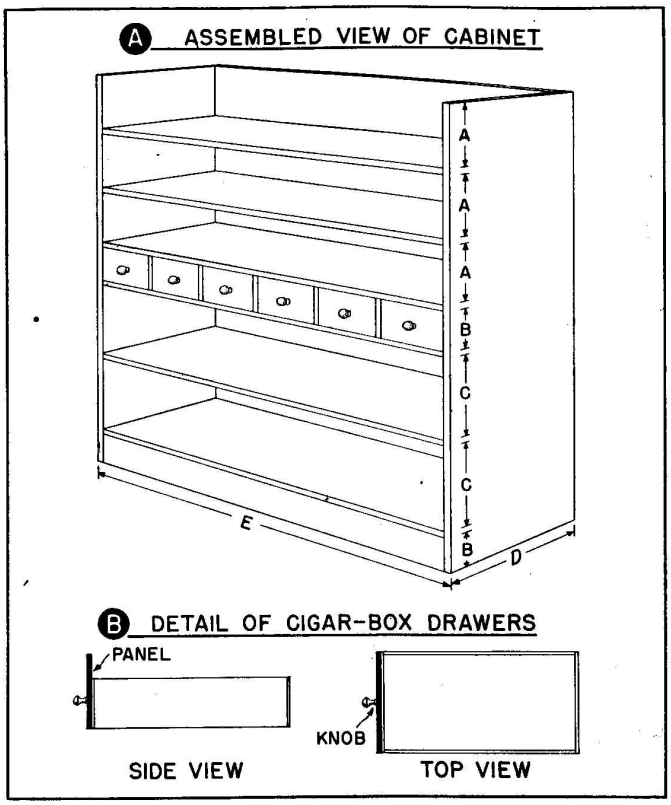

FIG. 5. Stock cabinet. Approximate dimensions: A, 10"; B, 6"; C, 15"; D, same width as shelf of work bench; E, 38". Use 1" clear pine for shelves, sides, and bottom pieces. Use ¼" plywood or Masonite for back and for panels on cigarbox drawers. Remove tops from cigar boxes.

shelves. For extra sturdiness, the upright pieces may be anchored to the wall (if this is practical), although this won't be necessary if a back is used.

STOCK CABINETS

You should also have a stock cabinet that provides for all your replacement parts. One convenient form of stock cabinet is shown in Fig. *5*. Make this unit as high as the top shelf of your workbench (or top storage shelf, if you prefer) and make its shelves approximately the same in

depth as the shelf unit on your workbench. The unit should be sturdy but need not have the strength required for the storage shelves.

The drawer unit for small parts, such as resistors and condensers, volume controls, dial drive belts, etc., may be made from cigar boxes (all the same kind of box, if possible, to get uniform size) as shown in Fig. *5B*. Remove the tops from the boxes. The ¼" plywood or Masonite panels on each box give it a finished appearance. The knobs may be obtained from any hardware store. Six such boxes should be ample for the average spare-time business. Be sure to have the shelves above and below the boxes close enough together so that the boxes are well enclosed.

We suggest that you keep your miscellaneous small hardware, such as machine screws, wood screws, washers, solder lugs, rivets, nuts, etc., in small glass jars. These may be obtained already filled with the parts you want from almost any radio wholesale firm. Label each jar with small gummed stickers to show what is in it.

CATALOG AND DIAGRAM FILES

From time to time you will get catalogs and bulletins from various radio wholesale firms, and you will gradually acquire individual circuit diagrams. Steel or cardboard box letter files (letter size), like those illustrated in Fig. *6*, are handy for filing material of this sort. Reserve one for circuit diagrams, another for catalogs, and a third for your business correspondence. It's a good idea to index the diagram file so that you'll know at a glance whether or not you have a particular diagram. Keep this file primarily for miscellaneous diagrams; whenever you get a bound volume of circuit diagrams, remove any duplicates from this file.

FIG. 6. Use inexpensive box letter files like these for storing diagrams, catalogs, and business correspondence.

Keep your job records, etc. on individual 4" x 6" cards in a card storage case like that shown in

FIG. 7. Use a storage case like this for keeping job record cards, etc. The size that will take a 4" by 6" card is best.

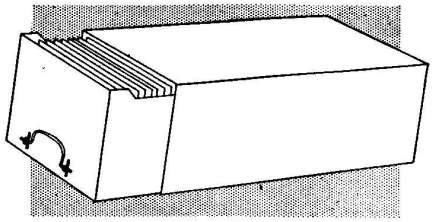

Fig. 7. You can also keep stock record and inventory cards in this sort of file.

A MORE PROFESSIONAL BENCH

Although either of the simple benches just described will probably be adequate for all your needs for some time to come, you may prefer to start out with the more elaborate bench shown in Fig. 8—or you may eventually decide to replace a simpler bench with one of this sort. This bench is more expensive than those described earlier, but it is not very much harder to build. A good carpenter could make it for you in less than a day; how much longer it would take you depends on your skill with tools.

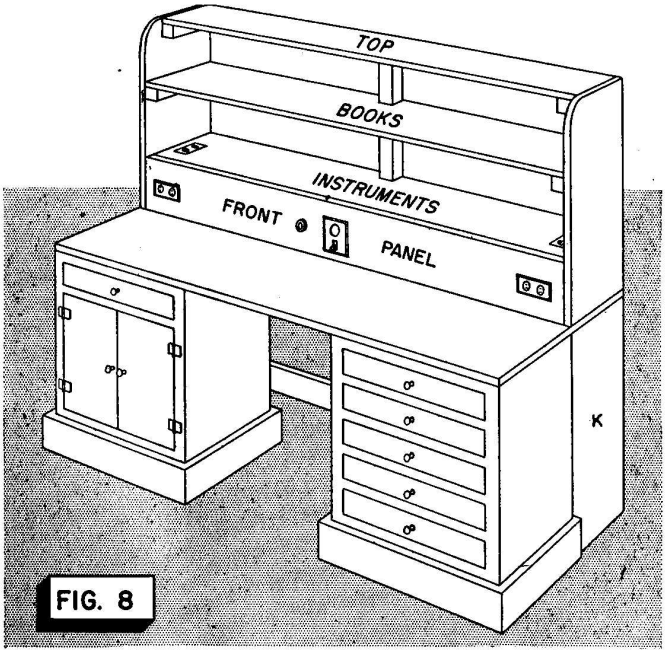

FIG. 8

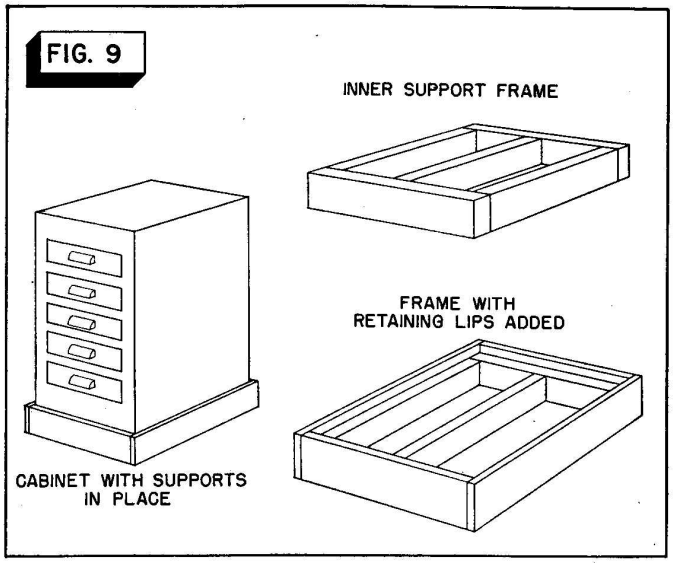

This bench is made up of a base unit and a shelf unit. We shall describe the construction of each in turn.

Making the Base Unit. The base unit consists of two pedestals, a top piece, a brace, and enclosing pieces. (These last are used to fill out the outline of the bench behind the pedestals.)

The pedestals are kitchen cabinet base units mounted on supports to bring them to the proper height. The first step in making the bench is to get these cabinets, since the dimensions of the rest of the bench depend to some extent on their sizes. Most mail order houses, and many furniture and department stores, carry suitable cabinets. Get two; one should have as many drawers as possible, the other should have only one drawer and a large cabinet space. We will assume, for our description, that the cabinets, you get are 24" wide, 21" deep, and 32½" high (a standard size). If the cabinets you get have different dimensions, make corresponding corrections in the directions that follow.

Make supports for these cabinets as shown in Fig. 9. The height of the inner support frames should be enough

to make the top of the bench nearly 38" high. The bench top is to be 1" thick, so, since the cabinets are 32½" high, the inner support frames may be made from 2 x 4 timber. Make each frame just the size of the bottom of the cabinet it is to support. See that the frames are strong and rigid.

After making a frame, secure four boards to it (see Fig. *9*) to act as lips to hold the cabinet on the frame. These boards should come about 1" above the top of the frame.

Next, fasten the bench top to these pedestals. The top is a piece of 5-ply plywood, 72" wide, 32" deep, and 1" thick. Place the pedestals about 24" apart and lay the top on them. (If the sides of the plywood do not have equally good finishes, make sure the better side is up.) Line up the pedestals and the top so that the *front* and *side* edges of the top are flush with the *fronts* and *outer sides* of the cabinets. Drill ¼" bolt holes through the top piece and through the tops of the cabinets, four holes to each cabinet. Counter-sink these holes, then run ¼" flat-head stove bolts through them. Fasten the bolts with nuts, tightening them enough to draw the heads of the bolts below the surface of the top piece.

(CAUTION: You must be careful not to allow the top to slip when you are drilling the bolt holes. A good way to prevent slipping is to clamp the top to the cabinets with woodworker's clamps or C clamps before you start drilling. If you have no clamps, be very careful when you drill.)

Next, fasten a length of 1" x 2" wood across the backs of the two cabinets as a brace. Locate the brace about an inch above the lips of the base supports. Fasten it to each cabinet by running wood screws through the cabinet back into the brace.

Finally, enclose the sides of the bench behind the pedestals. (Since the cabinets are not as deep as the bench top, the sides are "filled out" by the pieces marked *K* in Fig. *8*.) The pieces used for this should be at least ¾" thick, since they will help support the shelf unit when it is placed on top of the bench. If your cabinets have the dimensions we have given, each enclosing piece will have to be 11" wide and 37" high. Undercut the

pieces at the bottom to fit over the retaining lips of the cabinet supports and also to fit over the moulding (if there is one) along the base of the wall where the bench is to stand. If the rest of the bench base is not absolutely square, you may have to plane the enclosing pieces to make them fit tightly along the edges. Fasten each piece to one cabinet and the bench top with small angle brackets held by screws. Of course, place the brackets inside so that they will not show. It is not necessary to enclose the back of the base, since it will be against the wall. This completes construction of the base unit.

Making the Shelf Unit. The shelf unit consists of several shelves and supports, plus a sheet of ¼" plywood (or Masonite) 24" x 72" that is used as a back. An assembled view of the shelf unit, and details of the pieces used to make it, are shown in Fig. *10*. Cut all pieces (including the shelf support blocks) from the same stock as shown. The dimensions given are based on the assumption that stock 1" thick (finished size) is

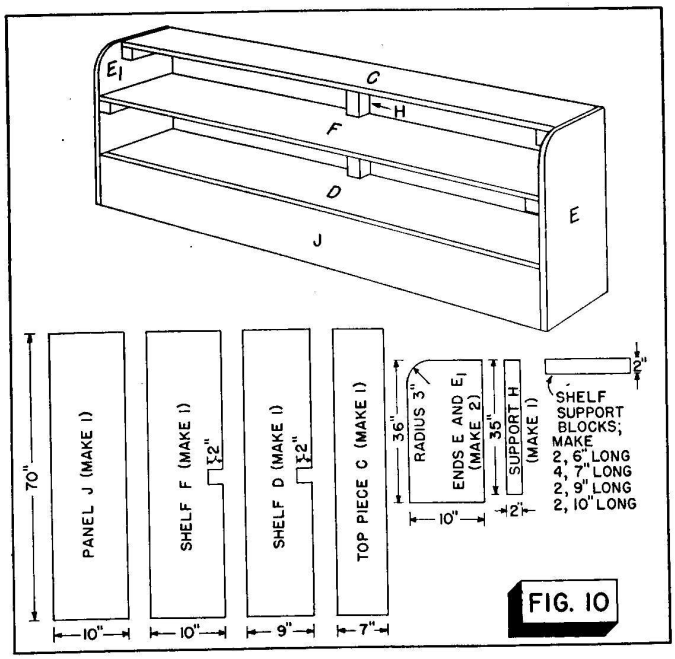

FIG. 10

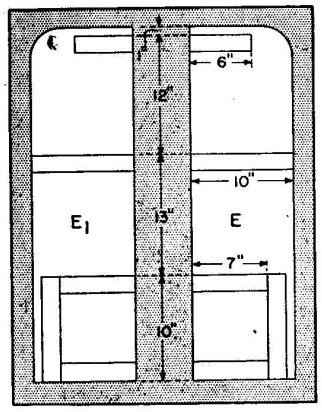

FIG. 11. This view shows the inner surfaces of the end pieces.

used; make appropriate corrections if your lumber is thicker or thinner. Do not use material thinner than ¾". Clear white pine is the best wood to use.

To assemble the unit, first screw the shelf support blocks to the end pieces *E* and E_1 in the positions shown in Fig. *11*. Be sure to place the 2" sides of the blocks against the end pieces.

Screw small angle brackets to the undersides of shelves *D*, *F*, and *C* (one bracket to each). These brackets are to be used to fasten the shelves to support piece *H* as shown in Fig. *12*. Locate the brackets on shelves *D* and *F* so that they are flush with the inner edge of the notched section. On shelf *C*, which is not notched, locate the bracket so that it is just the thickness of piece *H* in from the back edge.

Next, set the end pieces *E* and E_1 on edge on a flat surface, front edges up. Space them 70" apart (between their inner edges) and have them parallel. Lay shelves

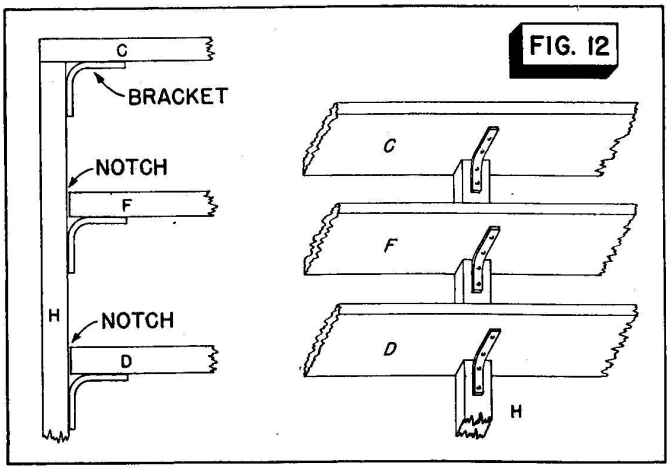

D and *F* in place. True up the shelves, then fasten them *loosely* to their support blocks (or to the end pieces *E* and E_1) with countersunk flat-head screws. Slide piece *H* in place, positioning it carefully in the notches so that its top will just hit the underside of shelf *C* when the latter is in place. Fasten the brackets on shelves *D* and *F* to piece *H* with wood screws.

Now set the shelf unit on end. True it up, then tighten the screws holding the shelves to the support blocks until the unit is rigid. Tighten the screws holding the shelf brackets to piece *H*. Fasten front panel *J* to its support blocks with countersunk flat-head screws, setting them up tight. Finally, set shelf *C* in place and fasten it to its support blocks and to piece *H*.

This completes assembly of the shelf unit, except for the Masonite or plywood back. Fasten this panel to the back of the unit. It should project 2" below the unit; the projecting part is used to fasten the shelf unit to the bench top and to the enclosing pieces. Fasten the back to the unit with screws.

You are now ready to wire up the bench. This must be done before the shelf unit is fastened to the bench top.

Wiring the Bench. We suggest that you install two duplex receptacles in the front panel and two in the top of shelf *D* as shown in Fig. *13*. Those in the panel are to be used to supply power for your soldering iron, the receiver under test, etc., and those in the shelf top to supply power for test instruments. These outlets should all be connected in parallel, and a switch and a 5-ampere fuse should be connected in series with the parallel combination. If you wish, an indicator lamp can be connected in parallel with the receptacles to show when the power is turned on. The schematic diagram in Fig. *13* shows the connections.

Unless you have had some experience with electrical wiring, it will probably be best to have your bench wired by an electrician. He will cut holes for the receptacles, and his price will include all materials. If you decide to do the work yourself, use wire no smaller than #12 in making your connections. The power cord, which is used to bring power from the wall outlet to the bench, should

be heavy-duty rubber-covered appliance cord. Lead it into the bench by drilling a hole in the back piece of the shelf unit under shelf *D*.

You can, of course, use exposed wiring and receptacles mounted on the outside of the panel and shelf *D*. We suggest the more elaborate hidden wiring because it is more in keeping with the general appearance of the bench.

When the wiring is complete, fasten the shelf unit to the bench top by running screws through the unit back into the top. Run a screw through the back into the edge of each enclosing piece *K* also.

Making the Tool and Accessory Racks. For convenience, you should mount your most frequently used hand tools (cutters, pliers, socket wrenches, and screwdrivers) on a board near your work and arrange your test leads neatly on a rack of some sort. Handy tool racks are shown in Fig. *14*. To make them, you need two pieces of clear lumber, each 26" x 2" x 1". Drill or notch them as shown in Fig. *14*. Make the notches large enough to hold your pliers and cutters easily. The drilled holes

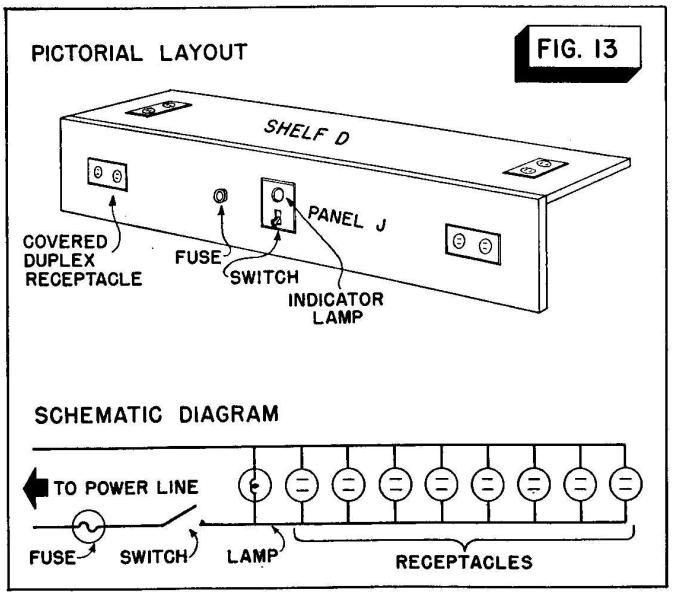

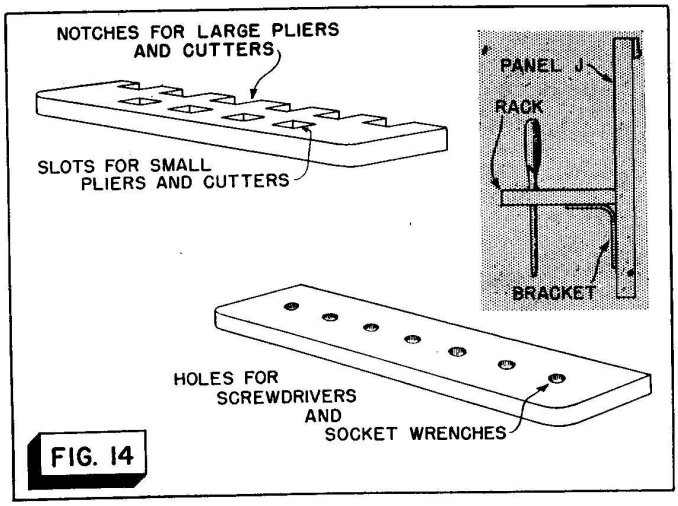

should be large enough to permit easy removal and insertion of screwdrivers and spintite socket wrenches, but should be too small for the tool handles to enter.

When the racks are made, fasten them to the front panel *J* with small angle brackets (three to each). Position the screwdriver-spintite wrench board so that the tool handles won't project above the level of the test instrument shelf, and so that the bits of long screwdrivers won't drag on the bench. Mount the cutter-plier board on a level with the screwdriver board and on the opposite side of the central switch plate.

A suitable rack to hold your test leads may be made by attaching a small towel or wash cloth bar (don't use glass) to the right end of the bench. Don't put it in place until the bench has been finished, however.

FINISHING THE WORKBENCH

First, fill all cracks, poor joints, the various screw holes (so as to conceal the screw heads), and the countersunk holes for the bolts in the bench top with Savogran Wood Putty or some similar crack filler. Allow it to dry thoroughly, then sand down any rough spots. At the same time, round off all sharp corners and edges with sandpaper so as to present a smoothly finished surface.

Remove sanding dust with a soft cloth moistened with turpentine. The bench can now be painted. (If you plan to use a linoleum top, don't paint the top of the bench.)

You may finish the bench in a single color (white, grey, dark green, brown, etc.) or you may use two contrasting colors. If two colors are used, paint the drawers and panels of the cabinet doors in the darker of the two colors. Finish the inside of the shelf unit in the darker of the two colors (outside a light color) or in a high gloss white or cream. Apply one color at a time and allow it to dry thoroughly before applying the other.

Use a clean brush about 2" to 3" wide with high-grade bristles. Clean the brush thoroughly with turpentine each time you finish using it, then suspend the brush in turpentine. Use a different brush for each color if you want a good two-color job.

Before painting, mix the paint thoroughly. Follow carefully the paint manufacturer's instructions about thinning and using his product.

► To get a good paint job, proceed as follows: First apply a coat of flat paint in the color chosen to all inside and outside surfaces of the bench. Always paint in one direction on a single surface, and never apply so much paint or enamel that it begins to run. Before leaving the job, go over all corners carefully with the brush to remove any surplus paint. Allow at least two days for this to dry. Smooth any rough spots in the paint with fine sandpaper or steel wool, remove all sanding dust, then apply another coat of flat paint, and allow two more days for drying.

· Use a high-grade enamel as the finish. Before applying it, rub down the entire bench lightly with fine sandpaper to remove irregularities and dust particles. Wipe the surface carefully, then apply the enamel. Although most quick-drying enamels will feel dry to the touch in 4 to 8 hours, they will mar easily if used too soon. Allow at least a week for the enamel to harden before using the bench. (As you see, a considerable amount of time is consumed in applying an enamel finish. Remember, though, that your bench will get a lot of punishment; a good, hard finish, therefore, is essential.) During this

time, if you wish, you can cement a good grade of linoleum to the top and bind the edges with plastic or stainless steel binding. If you prefer, you can probably find an expert linoleum layer who will do this for you.

► For the final step, apply several coats of good floor wax to the bench, rubbing each down briskly with a soft cloth. Fasten the test lead bar to the side of the bench, and insert the drawers. Your bench is now complete except for antenna and ground connections. Bring these to the bench after you have put it in its permanent location. As we suggested earlier, bring these leads to a bakelite strip fastened to the bench top, and label the leads plainly.

CUSTOM-BUILT TEST PANELS

As your business grows, you probably will add additional test equipment and will want to mount it permanently on your bench. You may then keep your portable equipment for home service calls. When that day comes, consult the literature put out by the manufacturer of your test equipment. Many manufacturers can supply complete units holding the basic pieces of equipment in an attractive panel. Others have plans for constructing panels. You are free to use your own ideas and should not hesitate to mount your equipment in any order that works out well for its use. In fact, it is a good idea to try several arrangements on bare shelves to see what instruments should be placed in the center or on the upper or lower shelves, before you make the final panel.

THE N. R. I. COURSE PREPARES YOU TO BECOME A
RADIOTRICIAN & TELETRICIAN
(REGISTERED U.S. PATENT OFFICE) (REGISTERED U.S. PATENT OFFICE)