HOW IT WORKS

FOR

VOLUME XX

JOHN F. RIDER PUBLISHER, INC.

480 Canal Street New York 13, N. Y.

TABLE OF CONTENTS

Printed in the United States of America

IMPEDANCE MATCHING OF RECEIVERS TO TRANSMISSION LINES

By John F. Rider

QUITE frequently communication receivers have input impedance ratings which do not properly match the impedance of the transmission line which feeds it. Surprisingly enough such mismatch can very greatly affect the sensitivity of the receiver, so much so that we have, on more than one occasion, noted great dissatisfaction expressed by the owner of the receiver concerning its performance. The receiver was condemned, whereas in truth, there was nothing at all wrong with the receiver; rather it was a simple case of incorrect use of matching the line to the receiver.

Increase in sensitivity, amounting to as much as 18 db, has been noted when such a receiver was properly matched to its transmission line. The loss of this amount of signal strength in a communication system is sufficient in every case to very materially influence the utility of the device. The matching method to be described is intended to remedy such conditions.

Matching Considerations

It must, of course, be understood that any impedance-matching arrangement, which is based upon a match at a specific frequency such as shall be described, is most effective at the frequency used in the equation. However, it must also be understood that a certain latitude in operation prevails and while the matching may be done at one frequency, it will be found effective over a range of frequencies. Thus, if the center frequency of a band is selected, the matching system will be found to be effective over that band, provided that the band is not too broad, although the greatest effectiveness will be found at the frequency for which the match is planned.

Range of Frequencies

The range of frequencies over which an improvement will be noted with such a match is a variable depending a great deal upon the operating parameters employed. In amateur communication receivers, the design of the circuitry is such that if, for example, the 10-meter band is selected and an impedance match is planned at the midfrequency, or around 28.8 Mc, an improvement will be noted throughout the range of from 28 to 29.7 Mc. Naturally, the improvement will decrease both sides of the match frequency, becoming least at the extremes of the band. This means that the choice of the matching frequency, relative to the portion of the band over which the receiver will be operated most in any one location, is an important consideration. This is so because the less the bandwidth over which the receiver is expected to perform, the less will be the loss when matching is accomplished at the midpoint or center frequency of that band.

For example, let us assume that, for one amateur station, the normal frequency of operation extends from 28 to 29 Mc and, in another station, it extends from 28 to 29.7 Mc. Let us further assume that the receiver in each case is matched to the transmission line at the center frequency of each band, which for the first case is 28.5 Mc and for the second case is about 28.8 Mc. If both stations are receiving a 28-Mc signal, a lower loss will occur with the station that is matched to 28.5 Mc. Admittedly, the difference is not too great but since communication operations demand the utmost in signal strength, such conditions warrant more than just casual thought.

Quarter-Wave Line

The basis of matching is the use of the impedance-transforming properties of a quarter-wave line which is shorted at one end and has the other end open. The open end joins the higher impedance of the two sources to be matched, which, in the example to be illustrated, is the receiver. Somewhere along the line between the open end and the shorted end is the point where the transmission line or lower impedance is connected as shown in Fig. 1. This point is dependent upon the ratio of the lower to higher impedance and hence upon the ratio of the line impedance to receiver impedance. Regardless of the characteristic impedance of a line, the open end of the shorted quarter-wave line will present a very high impedance. Therefore, the open end of a shorted quarter-wave line may be connected across a point without loading the circuit at that point. By tapping a feed point onto such a shorted quarter-wave line at the appropriate place along its length, the system can be employed to make one end look like the impedance of the load and the other end look like the impedance of the source, thus making the source devices see the proper impedances at the respective ends.

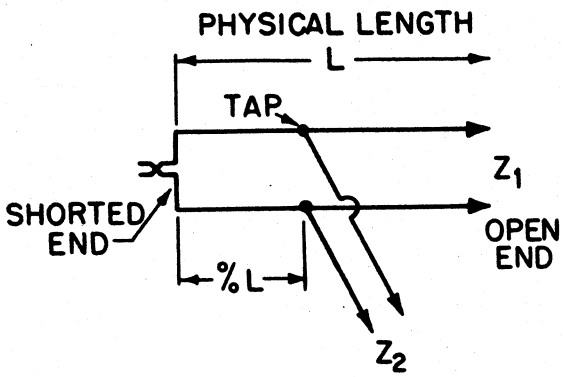

Fig. 1.—Diagram of quarter-wave stub used for impedance matching transmission line to receiver. One end of the stub is shorted and the other end open. The lower impedance to be matched is the one that is connected to the tap along the stub. The higher impedance is connected to the open end. Calculations as to the length L and the tap are included in the text.

Impedance Calculations

The determination of the impedance and physical length of the quarter-wave section and also the proper tapping point is simple if certain definite steps are followed. The impedance of the matching section is determined by the following equation

$$Z_s = \sqrt{Z_1 \times Z_2}$$

where Z_s is the impedance of the quarter-wave section, Z_1 is the impedance of the antenna transmission line, and Z_2 is the impedance of the load, which in this case is the receiver.

Let us take two typical cases. The first of these calls for the matching of a 52-ohm line to a 300-ohm receiver. Substituting these numbers into the equation above, as follows,

$$Z_s = \sqrt{52 \times 300}$$

results in the approximate answer of 125 ohms. This quotient indicates that the characteristic impedance of the line which will be used for the quarter-wave section must be 125 ohms. No such line is available commercially so that a compromise must be made by using that commercial line which most closely approximates 125 ohms. Such a line is the conventional 150-ohm line used in television systems.

Free-Space Length

Assuming that a line with a characteristic impedance of 150 ohms will be used one-quarter wave long, the next consideration is the determination of the free-space length of this line. In order to compute this length, it is necessary to select the frequency at which the match will be made. Let us assume that operation will be carried on in the 10-meter band and that since, in the majority of cases, operation is limited to the band embracing 28 to 29 Mc, a satisfactory midfrequency is 28.5 Mc, so we shall use 28.5 Mc as the base frequency. The equation which gives the result in inches for the free-space length of this line is

$$\frac{2950}{f_c}$$

where f_c is the base frequency. Substituting our figures, the equation reads

$$\frac{2950}{28.5}$$

Thus the free-space length of this line is 103.5 inches. However, the determination of the free-space length of the line is only the first step. We must now determine the physical length based upon the velocity of propagation along the line. According to Table I relative to the commonplace transmission lines available on the open market, the velocity of propagation of the 150-ohm twin lead is 77 per cent, which means that the free-space length must be multiplied by 0.77 in order to arrive at the final or physical length of the line.

TABLE I

Line	*Velocity of Propagation*
75-ohm twin	68%
150-ohm twin	77%
300-ohm twin	82%
72-ohm coaxial (RG59U)	66%
95-ohm twin shielded	66%

This length is found to be 80 inches which means that the quarter-wave matching section made of 150-ohm twin lead will be 80 inches long. One end will remain open and the other end will be shorted by exposing a small piece of each of the conductors and soldering them together. The minimum amount necessary to enable soldering should be exposed.

Tap Location

The location of the tap where the transmission line will be connected is determined from Table II. Since Z_2 in our example is 52 ohms and Z_1 is 300 ohms, the ratio of Z_2/Z_1 is 17.3. As can be seen, this ratio lies between 0.15 and 0.20 on Table II or between 25 and 30 per cent in from the shorted end. An approximation corresponding to midway between these two limits results in the tapping point being about 27.5 per cent

from the shorted end. Since the line is 80 inches long, 27.5 per cent amounts to 22 inches, and this is the location of the tap from the shorted end.

TABLE II

STUB CONNECTIONS FOR SPECIFIC IMPEDANCE RATIOS

$\frac{Z_2}{Z_1}$	% of L from Shorted End	$\frac{Z_2}{Z_1}$	% of L from Shorted End
0.05	14	0.55	53
0.10	20	0.60	56
0.15	25	0.65	59
0.20	30	0.70	63
0.25	34	0.75	67
0.30	37	0.80	70
0.35	41	0.85	75
0.40	44	0.90	80
0.45	47	0.95	90
0.50	50	1.00	100

where: Z_1 is the larger of the two impedances
Z_2 is the smaller impedance.

Courtesy Crosley Div. Avco Mfg. Corp.

Let us take another example in which the transmission-line impedance is 104 ohms, such as would be the case if two 52-ohm coaxial lines were used in parallel with the shields joined. The solution is as follows

$$\text{Stub impedance } Z_s = \sqrt{104 \times 300} = 176 \text{ ohms.}$$

Closest to this value is the 150-ohm line.

Free-space length for the midfrequency of the chosen band is

$$\frac{2950}{28.5} = 103.5 \text{ inches.}$$

$$\text{Physical length} = 103.5 \times 0.77 = 80 \text{ inches.}$$

The location of the tap is computed as follows

$$\frac{Z_2}{Z_1} = \frac{104}{300} = 34.7$$

Percentage of L from shorted end (see Table II) is, therefore, approximately 41 per cent. Thus the tap length is

$$80 \times 0.41 = 32.8 \text{ inches.}$$

It is, of course, possible that the transmission line may have a higher impedance than the receiver. The solution of the matching-section length is carried out in exactly the same way as before except that the connections are inverted, that is, the open end of the line would be connected to the higher impedance, which is the transmission line, and the tapped point along the line would be connected to the receiver. For the sake of illustration, the process of solving a typical case, such as a 600-ohm line and a 300-ohm receiver, is to use the 300-ohm impedance as Z_2 and the 600-ohm impedance as Z_1, in which case the location of the tap will be midway along the length of the line. Such a match would require the use of a 425-ohm *open line* because commercial transmission lines approximating this impedance are not available. As can be seen, the application of such matching stubs is much more convenient when the transmission-line impedance is less than that of the receiver, if for no other reason than that commercial lines approximating the required impedances are more easily available. As a matter of fact, in the case just given where the transmission line is of a higher impedance than the receiver, the use of a 300-ohm twin lead in place of the 425-ohm open line would afford some benefit, although not as much as if the proper line were used. At any rate, it would be preferable to no matching section at all.

The early reference to the possible gain in signal strength may seem incongruous with respect to the losses due to impedance mismatch, yet it has been found in virtually every case that proper match of this type affords very substantial improvements. The possible reason for this is that the rating of receiver input systems is nominal and that, in many cases, the actual input impedance exceeds the nominal rating by an appreciable magnitude so that the match attained in this fashion is more beneficial than would be anticipated from a 4:1 or 5:1 mismatch in impedance.

Band Changing

It is, of course, natural to consider the matter of behavior of the bands other than the 10-meter band for which the impedance match is used. What is the action when the receiver, which is matched on 10 meters, is used on another band? Obviously a quarter-wave section on 10 meters becomes an eighth-wave section on 20 meters, and the match no longer prevails. As a matter of fact, it would be detrimental to operation. Thus, the individual who employs a communication receiver on various bands is faced with the problem of providing the number of such matching stubs between the transmission line and the receiver, each of which may be switch-controlled so as to place the proper line into the circuit. In the event that different antennas and different transmission lines are used for operation in the different joints, individual matching sections can be constructed along the lines described for each of the joints. The open ends of these stubs may all be connected at the receiver end without doing too much harm, provided that the receiver presents the higher of the two impedances involved in each of the stub calculations.

COUPLED CIRCUITS

By Willard Moody

COMMUNICATIONS and standard commercial receivers use a variety of coupling methods for transferring energy from one part of a circuit to another. This energy may be in the form of a modulated or unmodulated r-f signal. It may, in some cases, be an i-f or an audio signal.

Various coupled circuits used in receivers shown schematically in Volume XX will be illustrated and described.

Motorola 309

The r-f input circuit of this set appears in Fig. 1. At first glance, the circuit appears to be quite simple.

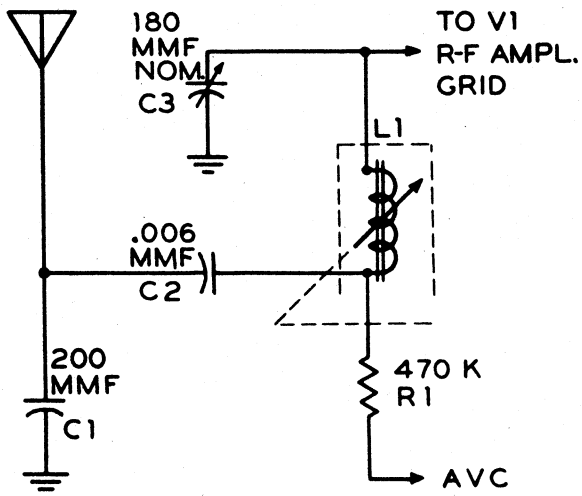

After Motorola

Fig. 1.—R-f input circuit of Motorola 309 auto radio.

Actually, there is more to it than meets the eye upon quick inspection. A careful study reveals some interesting aspects.

Suppose that, to simplify the analysis, we redraw the circuit as shown in Fig. 2. The capacitance C_A, for the sake of simplicity, may be assumed to be the lumped antenna capacitance, and the inductance L_A is the lumped antenna inductance.

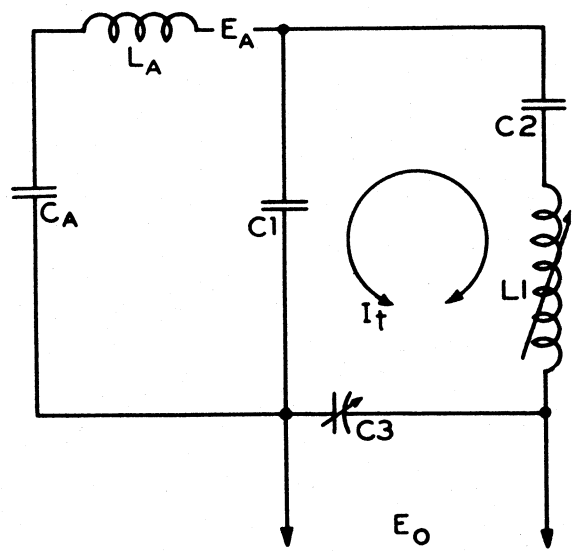

Courtesy Motorola

Fig. 2.—Equivalent and simplified circuit of Motorola 309 input arrangement.

How did we arrive at these assumptions? Consider that the antenna is a relatively short vertical wire or rod, much less than a half-wave long at broadcast frequencies. Then we have the equivalent antenna circuit shown in Fig. 3. The automobile frame is equivalent to a counterpoise and has such a large capacitance to earth or ground that we may consider the automobile metal body and frame to be at ground potential. As a vertical wire is used, its inductance will be the principal factor and its capacitance to ground will be relatively small. It will be a low-capacitance type antenna.

As we move along the antenna from the terminal A to the tip T we find that each elemental section of the antenna conductor has the property of inductance. We have shown $L1$, $L2$, and $L3$, as the series inductances. Every inch of the conductor, or even smaller linear parts, has an L value. If we add $L1 + L2 + L3$, we get a lumped or sum inductance value which we have called L_A in Fig. 2.

Similarly, every inch of the conductor or point on it has a capacitance with respect to the frame of the car and, therefore, to earth or ground, since the car or

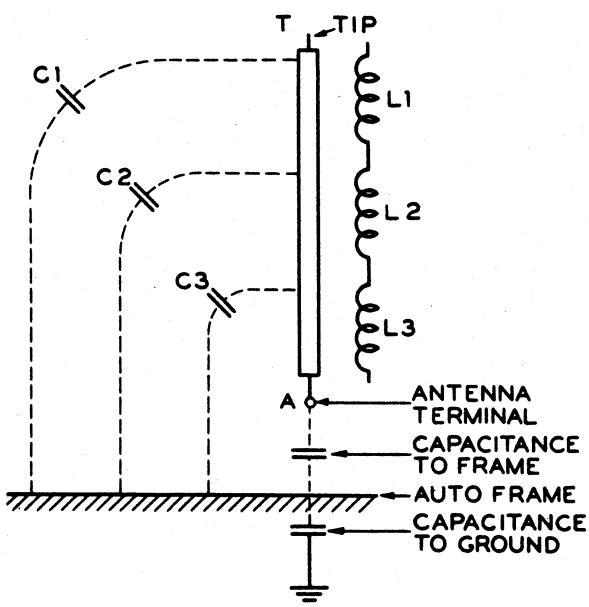

Courtesy Motorola

Fig. 3.—Diagram of vertical antenna circuit used with auto radio.

automobile frame is virtually at ground potential. As we move from terminal *A* to the tip of the antenna, the capacitance of a point on the antenna with respect to ground decreases, since the distance between the point and ground has also increased. *C3* is greater than *C2; C2* is greater than *C1,* etc. Consequently, we can consider that the main component of capacitance will be *C3* and the return path for current flow at the end of the antenna will be *C1.* This end value is shown as C_A in Fig. 2, and it should not be confused with *C1* in Fig. 2 or Fig. 1.

As *C1* is very large, comparatively, and is in shunt with *C3,* with reference to Fig. 2 and Fig. 3, we can simplify the circuit considerably by neglecting *C3* and considering only *C1.*

Now, with reference to Fig. 2, the voltage induced in the antenna when a radio wave links with it is marked E_A. This voltage causes a current to flow in the antenna circuit, which is a series circuit consisting of E_A, L_A, C_A and the parallel *L-C* circuit. For further simplicity, this parallel *L-C* circuit of *C1, C3* and *L1-C2* may be represented by an impedance symbol Z_T, as shown in Fig. 4. At resonance of this circuit *C1-C3-C2-L1,* Z_T has a maximum value and the value of I_A is a minimum value. The voltage across Z_T is I_A multiplied by Z_T and is a maximum. Off resonance, the voltage decreases according to the slope of the selectivity curve, as in any tuned circuit.

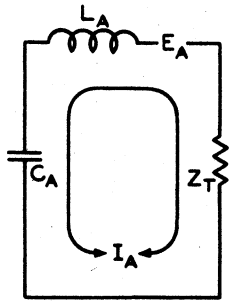

Courtesy Motorola

Fig. 4.—Equivalent series-resonant circuit.

This aspect of the *C1-C2-L1-C3* circuit as a series impedance Z_T, resistive in nature, is one feature of the circuit. However, from parallel resonant circuit theory, we know that when energy is fed to an *L-C* circuit such as that in Fig. 5, the circuit will oscillate and a maximum circulating current will be obtained at resonance. The frequency of resonance is given by the familiar equation or formula shown in the drawing.

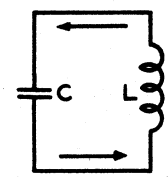

Courtesy Motorola

Fig. 5.—Simple *L-C* circuit in which oscillation occurs and exchange of energy between inductance and capacitance.

This current is marked I_t in Fig. 2 and is apart from the exciting current I_A in Fig. 4. In this receiver, the Motorola 309, from a practical standpoint, the tuning is controlled in traversing the receiver dial, by varying the inductance of *L1.* At resonance, when I_t is a maximum, the voltage across *C3* (Fig. 2) is also a maximum. This follows from the fundamental fact that $E_c = IX_c$ in a capacitance circuit. Above resonance, the voltage across *L1* rises and that across *C3* drops, since the reactance of *L* increases and that of *C3* diminishes. This follows from the familiar formulas $X_L = 2\pi fL$ and $X_c = 1/(2\pi fC)$.

C3 is essentially a trimmer capacitor which is adjusted at the high end of the band. The output voltage of the network is marked E_0 in Fig. 2 and is the signal potential fed to *V1,* which is an r-f amplifier tube in the receiver.

This concludes the discussion on the Motorola 309 input circuit. It has been demonstrated that this circuit, which appears to be simple, can be considered more complex than would ordinarily seem to be the case, upon closer inspection.

Hallicrafters S-72

The input circuit of this receiver is shown in Fig. 6. The switching system permits selection of four bands

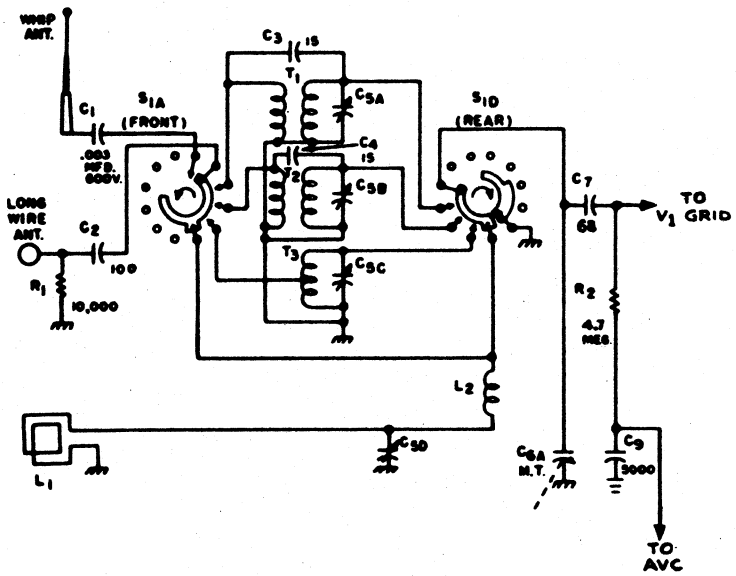

After Hallicrafters

Fig. 6.—Antenna input and switching circuit of Hallicrafters S-72.

of frequencies. Band 1 extends from 550 to 1,600 kc; Band 2 extends from 1,500 kc to 4.4 Mc; Band 3 extends from 4.5 to 11.5 Mc; and Band 4 extends from 11 to 30 Mc.

L1 is a loop antenna. *C5d* is a trimmer on broadcast operation. *L2* is an antenna loading coil used only on the broadcast band. *T1* is used on Band 4; *T2* on Band 3; and *T3* on Band 2.

The bandswitch elements *S1A* and *S1B* permit selection of *L1, T3, T2,* or *T1*. The switch is shown in the broadcast-band position. The long-wire antenna circuit is connected through *C2* and *S1A* to *L2* and *S1B*. The circuit then traces to the *V1* grid circuit. The whip antenna is disconnected on Band 1, which is the broadcast band.

When the switch is rotated to the 2nd position, referring to *S1A* and a counterclockwise direction, *S1B* moves simultaneously in a clockwise direction. These two switch segments are ganged together by a common shaft.

On the 2nd position, *L2* is connected to the tap on *T3* for Band 2 operation from 1,500 kc to 4.4 Mc. The long-wire and whip antennas are connected to each other through *C2, S1A,* and *C1*. The *V1* grid is connected to *T3*. The loop and *L2* are out of the circuit.

In the third setting of the switch, the loop is disconnected from the *V1* grid circuit, and *T2* is connected to the whip and long-wire antenna circuit.

In the fourth position of the bandswitch, *T1* is connected to the whip and long-wire antenna circuit and the loop is out of the circuit (not connected). As shown, the antenna input circuit coupling and characteristics are varied to suit the requirements for broadcast, medium, and high frequencies.

Motorola 79XM21

This receiver uses a rather unusual method of coupling the *V1* r-f amplifier to the *V2* converter. Fig. 7 is a breakdown circuit used for explanation. On f.m., the plate load for *V1* consists essentially of *L4* shunted by the input impedance of the following *V2* stage. *R3* is shorted by *S2B* on f.m.

S2C connects *L6* in the circuit on f.m. As *L6* is the equivalent of a parallel *L-C* tuned circuit, functioning as a quarter-wave transmission line of variable length, we may visualize *L6* as being a coil with a paralleled capacitance C_X. Both the *L* and *C* values of the line are varied as the shorting plunger is moved into the coil-capacitor (*L6*) assembly, and the shorter in electrical length the line is made, the higher becomes the operating frequency.

Conversely, as the line length is increased electrically, the frequency becomes lower. Basically, we know that maximum voltage across the load will be obtained when the impedance is a maximum, and this condition is secured at resonance for a particular frequency.

On f-m frequencies of the order of 88 to 108 Mc, the reactance of *C11* is negligible and that of *C10* is very small. Therefore, we can visualize, at resonance, a simple resistive impedance of high value between *S2C* and ground, across the terminals of *L6*-C_X.

The voltage across this impedance is essentially that across the input circuit of *V2*, since *R5* is small in value and the reactances of *C11* and *C10* are insignificant.

On a.m., *R3* is not shorted by *S2B* and the *V1* plate load is essentially the total impedance of *L4* and *R3* shunted by the input impedance of the *V2* stage. The impedance of *L4*, however, is so small as to be negligible at broadcast frequencies and the input impedance

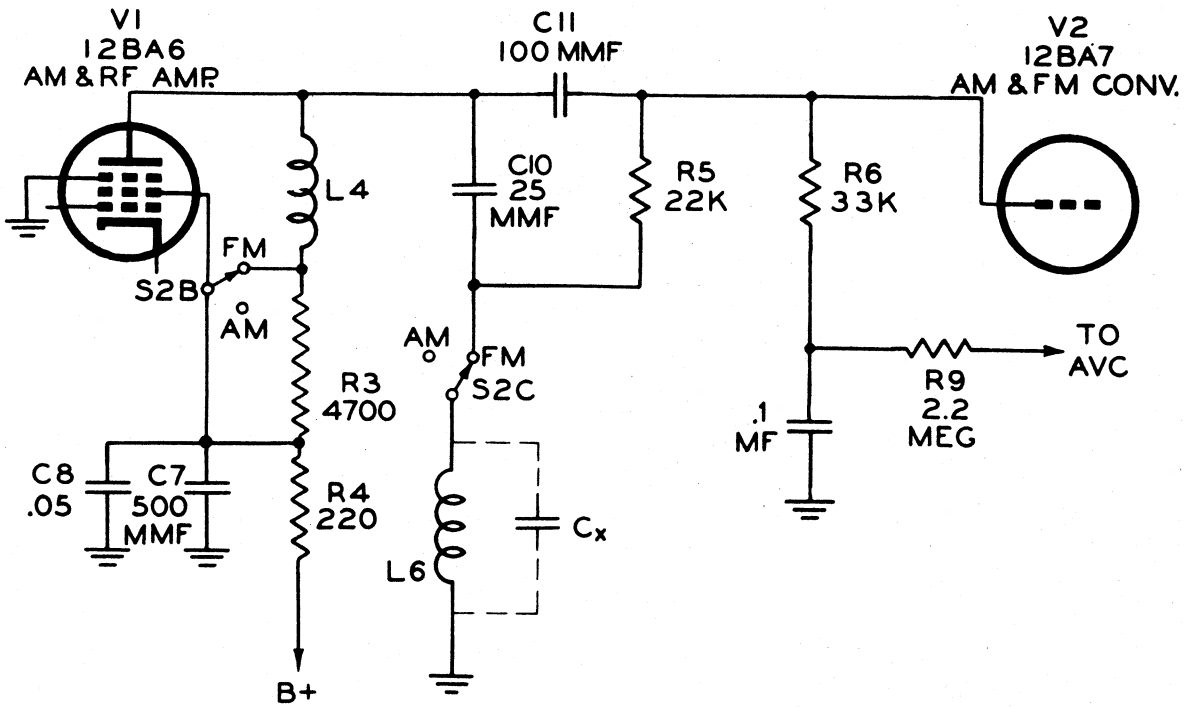

After Motorola

Fig. 7.—Coupling of *V1* r-f amplifier to *V2* converter in Motorola 79XM21.

of the *V2* stage is so high that, for all practical purposes, the *V1* plate load R_P is 4,700 ohms. *C10* has an appreciable reactance at broadcast frequencies and may be considered to have been removed from the circuit on a.m.

The coupled circuit now may be simplified to that of Fig. 8, as an approximation. Note that the f-m quarter-

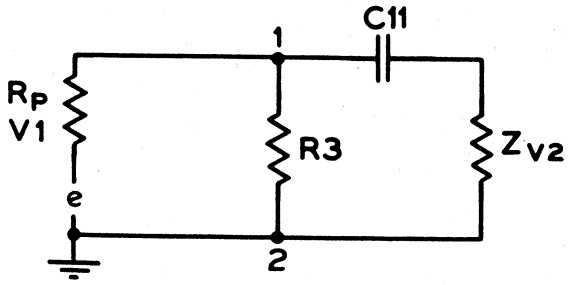

Courtesy Motorola

Fig. 8.—Simplified coupled circuit in Motorola 79XM21.

wave line is out of the coupled circuit on a-m operation. With reference to Fig. 8, *e* is the internal voltage of *V1* considered as a potential generator, Z_{V2} is the input impedance of tube *V2* and the lower terminal of *R3* is considered to be grounded since the reactance of the parallel combination of *C8-C7* may be considered negligible.

C11 and Z_{V2}, it is seen, form the elements of a simple voltage divider. The potential across *R3* is applied to Z_{V2} through *C11,* which is the linking element in the coupled circuit. The voltage attenuation of *C11* tends to increase with decreasing frequency, but as the input impedance of *V2* is essentially capacitive and rises with decreased frequency, a compensating or balancing action is achieved.

For maximum voltage across terminals 1-2, *R3* should have a high value, and the net impedance across these terminals should be high, but by making *R3* low in value a broader band-pass characteristic is obtained at the expense of voltage gain.

The tuned input circuit of *V1* is not shown here but is shown in the complete schematic in Volume XX, and is adequate for preselection on the broadcast band.

RCA 9BX5

Coupling between the 1U4 i-f plate- and grid-return circuits, shown in Fig. 9, results in gain reduction accompanied by increased stability at the i-f level. A

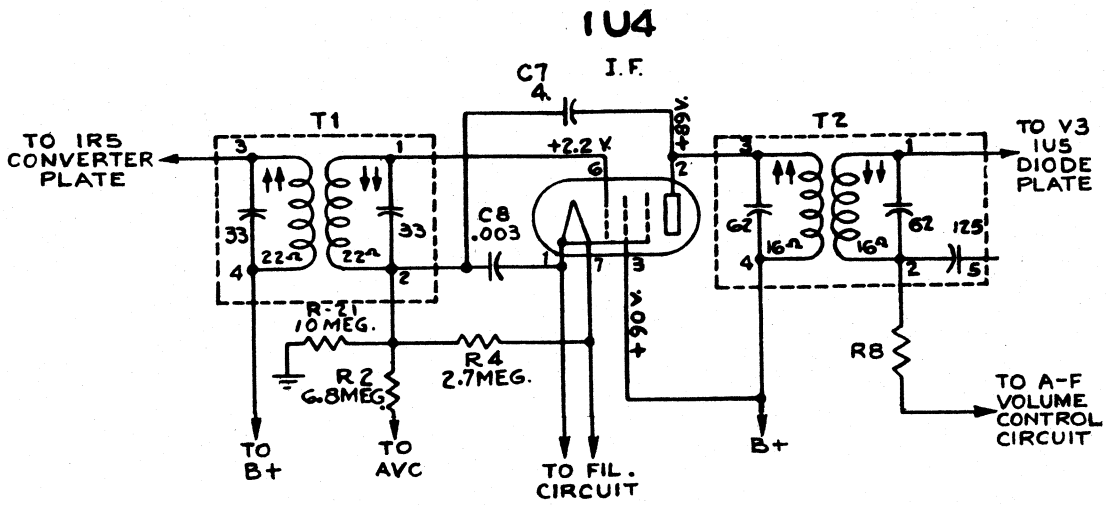

After RCA

Fig. 9.—Coupled circuit in RCA 9BX5.

signal voltage developed in the plate circuit is fed to *C8*, a 0.003-μf capacitor, through *C7*, a 4-$\mu\mu f$ unit. A voltage drop develops across *C7* and the impedance of *C8* is not large at the i-f level. However, only a small amount of voltage is required and a sufficient potential for the desired purpose, negative feedback, is obtained across *C8*. This potential acts in series with the grid-filament input circuit of the 1U4. As the feedback voltage is out of phase with the input voltage across the secondary of *T1*, partial cancellation results. The stage is thus limited in the tendency to oscillate, a trouble often encountered in i-f stages.

RCA 9X641

This receiver uses an unusual coupling circuit for signal transfer from r-f plate to converter grid, as shown in Fig. 10. *L1-C8* is a resonant primary circuit. *L2-C2, C5,* is the usual resonant secondary circuit. However, the capacitance loading effect of the *V2* input circuit is minimized by tapping down on the secondary coil and a voltage reduction is also secured. The primary purpose of the circuit is evidently to achieve selectivity and equalized sensitivity over the tuning range. Capacitive coupling at the high end of the band is obtained by means of the "gimmick", an r-f cable, shown in the drawing. An r-f voltage is transferred through this capacitance from the 12SK7 r-f plate to the 12SA7 converter grid. This is equivalent to the usual coupling capacitance or "gimmick" often found to provide coupling between the primary and secondary of broadcast antenna transformers in receivers.

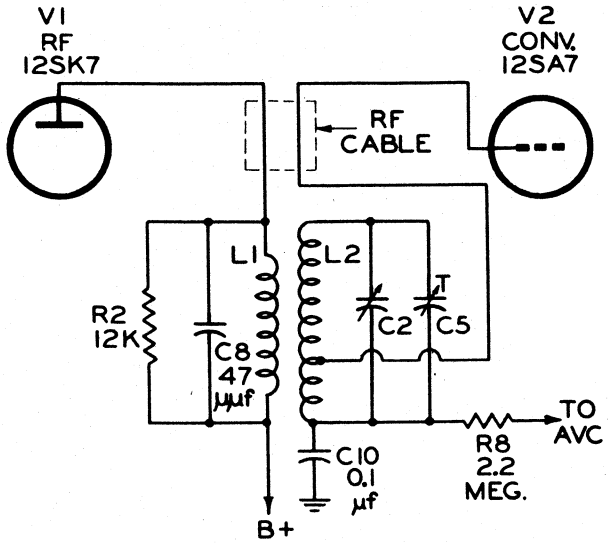

After RCA

Fig. 10.—Signal transfer from r-f plate to converter grid in RCA 96X641.

Hallicrafters S-72

The output circuit of this receiver is shown in Fig. 11. This coupled circuit uses a transformer. The voice coil is connected in the circuit of Fig. 11, which can be simplified to the equivalent circuit in Fig. 12. The plug is out of the headphone jack. The voice coil is connected across a section of the secondary. The impedance of the voice coil is usually quite low, less than about 10 ohms. The impedance of the headphones will usually be quite high, 2,000 ohms or higher. To accom-

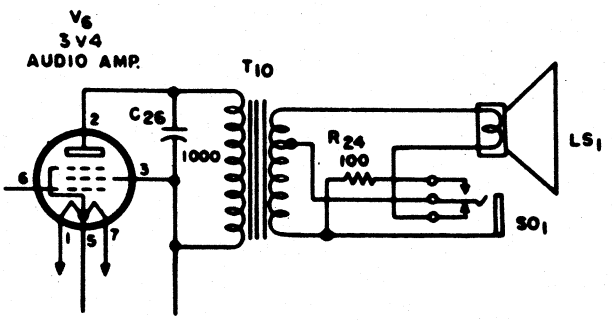

After Hallicrafters

Fig. 11.—Audio output circuit of Hallicrafters S-72.

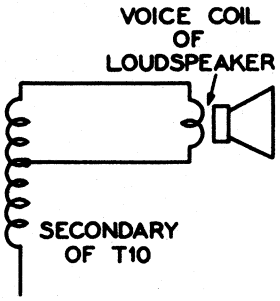

Courtesy Hallicrafters

Fig. 12.—Secondary circuit of output transformer stage in Hallicrafters S-72 when loudspeaker arrangement is used.

modate the changed impedance of the circuit when a headphone plug is inserted in *S01*, the circuit is equivalent to that of Fig. 13. The voice coil is disconnected, silencing the loudspeaker. The 100-ohm loading re-

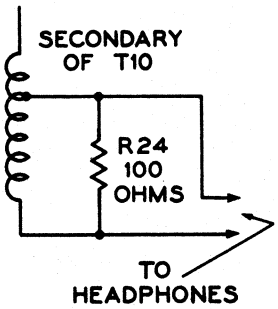

Courtesy Hallicrafters

Fig. 13.—Secondary circuit of output transformer stage in Hallicrafters S-72 when headphones are used.

sistor limits the voltage across the headphone circuit to prevent damage and overloading of the headphones.

RCA 9X571

Coupling between the upper section of the primary winding of *T3* and the lower portion permits hum cancellation in the output transformer. With reference to Fig. 14, a hum current may be assumed to flow from

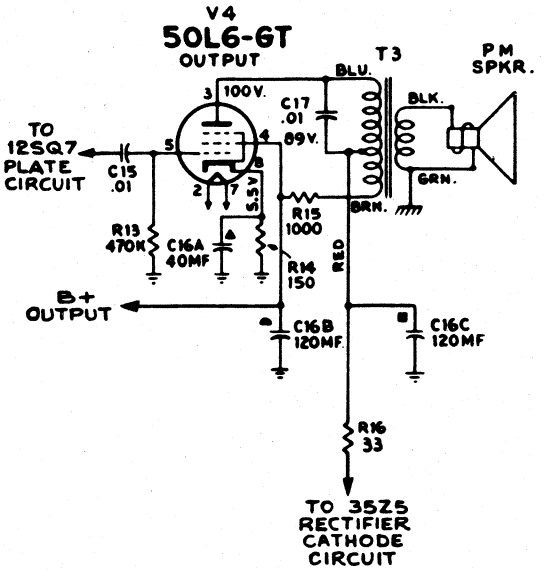

After RCA

Fig. 14.—Hum reduction circuit in output stage of RCA 9X571.

the 50L6 plate to the primary tap, producing core flux having a hum frequency cyclic change. An opposite current, producing an opposing electromagnetic field and cancelling the first hum flux, may be assumed to flow from the screen circuit and *R15* through the lower portion of the *T3* primary and to the tap. The common path from the tap to the 35Z5 cathode is through *R16*. *C16C* assists in hum reduction.

Using the circuit arrangement described, economy and efficiency are obtained simultaneously.